OREGON®

2019

2019

# 2019 Table of Contents

## Outdoor Power Equipment OPE


**40V MAX Cordless Tools.** . . . . . .4–29
PowerNow™ Lithium Ion Battery Packs, CS300 Chainsaw, LM300 Lawn Mower, LM400 Lawn Mower, Cordless Multi-Attachment System, BL300 Hand-Held Blower, ST275-GSL Trimmer/Edger, PS250 Pole Saw, HT250 Hedge Trimmer, WL275 Portable Light, Battery Chargers, CS1400 & CS1500 Corded Chainsaws, Replacement Parts and Accessories, Point of Purchase Displays

**120V Professional Series** . . . . . 30–37
BL120VX Leaf Blower, ST120VX String Trimmer, EG120VX Edger, EHT120VX Hedge Trimmer, Battery Packs, Batteries, 120V Battery Charging

**Log Splitters** . . . . . 38–47
22-Ton, 28-Ton, 28-Ton with EXtend Split™, 35–Ton, Kinetic, and Replacement Parts


## Forestry FOR


**1** **ANSI, Quick Look Guide, Guide Bar and Saw Chain Application Chart** . . . . . 2–101
ANSI Standard and Oregon® Saw Chain Classification Chart Quick Look Guide, Guide Bar and Saw Chain Application Chart, Ordering Oregon Saw Chain, Overview of Packaging Changes, Guide Bar and Saw Chain Combos

**2** **Saw Chain** . . . . . 102–147
PowerCut™ 70-Series EXL, SpeedCut™ System, Features and Terminology, Saw Chain for High-Performace Chainsaws: PowerCut™, SpeedCut, VersaCut™, ControlCut™, DuraCut™, and RipCut™, Saw Chain for Carving: Sculptor™, Saw Chain for Reliable Performance: AdvanceCut™, Speciality Saw Chain: PowerSharp®, Cross-Reference Chart, Sharpening, Grinding, and Replacement Parts, Troubleshooting

**3** **Guide Bars** . . . . . 148–179
Overview, Light-Weight Professional Guide Bars: SpeedCut, VersaCut, and ControlCut, Professional Guide Bars: PowerCut and DuraCut, Occasional User Guide Bars: AdvanceCut and Single Rivet, Carving Guide Bars, Replacement Parts, and Chainsaw Mounts, Troubleshooting

**4** **Sprockets** . . . . . 180–211
Spur and Rim Sprockets and Part Numbers, Applications by Chainsaw Model, Applications by Oregon Part Number, Troubleshooting

**5** **Chainsaw Parts** . . . . . 212–228
Replacement Parts for Chainsaws

## Accessories: Shop, Field, & Safety SFS


**I** **Shop Items, Filing and Accessories** . . . . . 2–23
Point-of-Purchase Displays, Saw Chain Filing Tools, Guide Bar Grease, Dresser, Cleaners and Covers, Forestry Felling Wedges, Arborist Saws, Levers, Lifting Picks and Tongs, Screnches

**II** **Shop Tools** . . . . . 24–71
Saw Chain Auto Grinders, Bench Grinders, Spinners, Breakers, Accessories, and Replacement Parts, Lawn Mower Blade Grinders, Accessories, and Replacement Parts, Mower Lifts, Jacks, and Ramps, General Shop and Tire Tools

**III** **Field Supplies** . . . . . 72–107
Commercial Equipment Racks and Accessories, Mower Sulkies, Fuel and Oil Supplies, Storage, and Containment, Lubricants, Grease, Cleaners, Solvents, Sealants, and Glues, Hardware Assortments, Nuts, Bolts, and Washers

**IV** **Safety** . . . . . 108–128
Safety Equipment, Forestry, Gloves, Safety Eyewear, Respirator Masks, and Hearing Safety


## Lawn & Garden LG


★ **2019 New Products, Illustrated Parts Lists.** . . . . . 2–175
Cautions and Warnings, 2019 New Products, Illustrated Parts Lists

**A/B** **Replacement Parts A to B.** . . . . . 176–591
Air Filters, Bearings and Bushings, Belts, Blade Adaptors, Blades: Overview, by Length, Universal, OEM Replacements, and Edgers

**C/N** **Replacement Parts C to N.** . . . . . 592–811
Carburetor Parts, Centrifugal Clutches, Chain Roller Parts, Chainsaw and Cut-Off Saw Parts, Commercial Parts, Control Cables, Drive Parts, Electrical Parts, Engine Parts, Fuel Line and Accessories, Grass Bags, Hedge trimmer Parts, Ignition Parts, LInkage, Jacks, and Hardware, Miscellaneous Parts, and Mufflers

**O/S** **Replacement Parts O to S.** . . . . . 812–951
Oil Filters, Pulleys, Seats, Snow Thrower Parts, Spark Plugs, Spindles, Sprayers, Springs, Starters, Starter Parts, Starter Rope, Steering Parts, and Switches

**T/W** **Replacement Parts T to W** . . . . . 952–1047
Tiller Parts, Tires, Tubes, and Tire Chains, Trimmer Lines and Heads, Trimmer Brush Cutter Blades Trimmer and Blower Parts, and Wheels

**X** **Cross References** . . . . . 1048–A48
Briggs and Stratton X-Reference, OEM X-Reference, Aftermarket X-Reference

# OUTDOOR POWER EQUIPMENT


40V & 120V Cordless Tools Intro . . . . OPE 6–7
40V MAX* Cordless Tool System . . . . OPE 8–9
PowerNow™ Lithium Ion Battery Packs . OPE 10
Cordless Multi-Attachment System . .OPE 11–14
CS300 40V MAX* Chainsaw. . . . . OPE 15
LM300 40V MAX* Lawn Mower. . . . . OPE 16
LM400 40V MAX* Lawn Mower. . . . . OPE 17
BL300 40V MAX* Hand-Held Blower . . . OPE 18
ST275-GSL 40V MAX* Trimmer/Edger . . OPE 19
PS250 40V MAX* Pole Saw . . . . . OPE 20
HT250 40V MAX* Hedge Trimmer . . . . OPE 21
WL275 40V MAX* Portable Light . . . . OPE 22
40V MAX* Accessories . . . . . OPE 23
CS1400 & CS1500 Corded Chainsaws. . . OPE 24
Replacement Parts . . . . . OPE 24–27
Point of Purchase Displays . . . . . OPE 27–29

120V Professional Series Intro . . . . OPE 30–31
BL120VX Leaf Blower . . . . . OPE 32
ST120VX String Trimmer . . . . . OPE 33
EG120VX Edger . . . . . OPE 34
EHT120VX Hedge Trimmer . . . . . OPE 35
Battery Pack, Batteries, & Charging . OPE 36–37

Log Splitter Family . . . . . OPE 38
22-Ton Log Splitter . . . . . OPE 39
28-Ton Log Splitter . . . . . OPE 40
28-Ton Log Splitter with EXtend Split™ . OPE 41
35-Ton Log Splitter . . . . . OPE 42
Kinetic Log Splitter . . . . . OPE 44–45
Log Splitter Replacement Parts . . . OPE 46–47

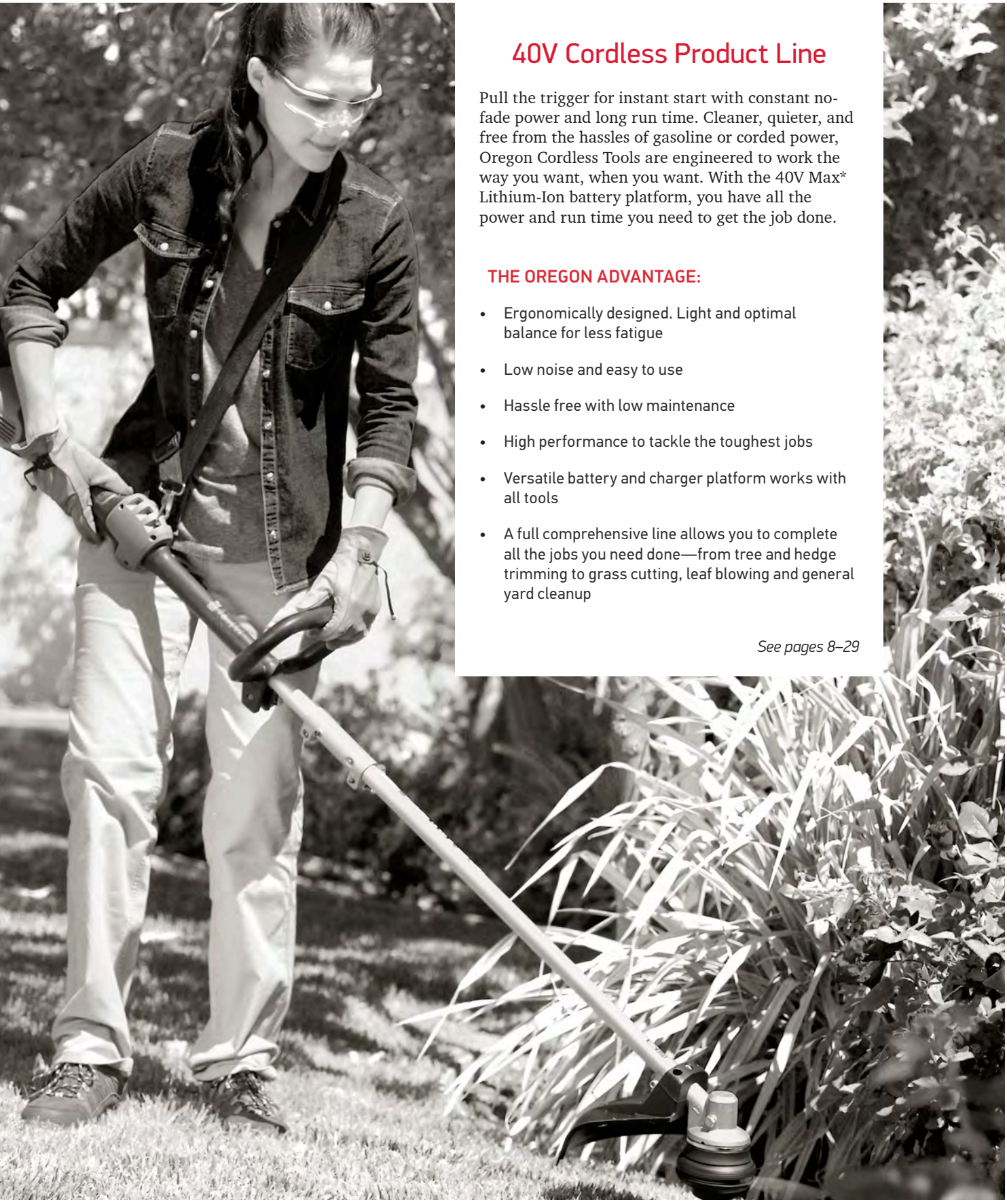

## 40V Cordless Product Line

Pull the trigger for instant start with constant no-fade power and long run time. Cleaner, quieter, and free from the hassles of gasoline or corded power, Oregon Cordless Tools are engineered to work the way you want, when you want. With the 40V Max* Lithium-Ion battery platform, you have all the power and run time you need to get the job done.

### THE OREGON ADVANTAGE:

- Ergonomically designed. Light and optimal balance for less fatigue
- Low noise and easy to use
- Hassle free with low maintenance
- High performance to tackle the toughest jobs
- Versatile battery and charger platform works with all tools
- A full comprehensive line allows you to complete all the jobs you need done—from tree and hedge trimming to grass cutting, leaf blowing and general yard cleanup

*See pages 8–29*

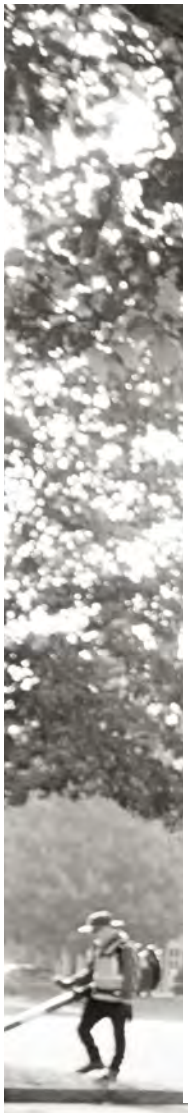

## 120V Professional Series™

The Oregon 120V Professional Series was developed specifically with the professional landscaper in mind. The platform combines cutting-edge technologies to finally offer the power and durability of traditional tools with all the advantages of battery power. With the ability to run a full day of real commercial work with minimal, if any, need for a fresh battery, this equipment provides the muscle needed to finish the job.

### THE OREGON ADVANTAGE:

- Battery capacity for a full day's work
- Efficient brushless electric power to match gas
- Smart controller to manage tool performance – automatically
- IP56 weather-ready rating to withstand life in the outdoors rain or shine
- Integrated dashboards communicate charge level and equipment diagnostics
- Advanced noise and vibration damping technology integrated into all tools
- Robust build quality to endure real professional-grade use

*See pages 30–37*

40V* MAX LITHIUM-ION

# Oregon® Cordless Tool System

## INSTANT START
- No Pull Cords
- No Warm-Up Required
- No Gas-Oil Mixing

## COMFORT AND CONTROL
- Ergonomic Design
- Light-Weight and Balanced
- Low Vibration

## LOW NOISE
- Significantly Quieter than Gas-Powered Motors
- Silent Between Cuts/ Trimming
- Start Early and Work Late

## ZERO EMISSIONS
- Environmentally Friendly
- No Gas Fumes

## LESS DOWN TIME
- Fewer Repairs Needed (Compared to Gas Engines)

HT600

EX600

HT250

EG600

BL300

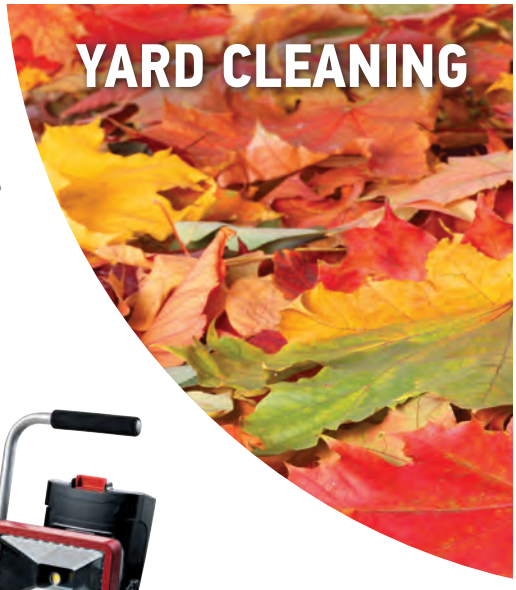


110V Corded

See page 24

WL275

*Fully charged battery voltage measured without a workload is 40 volts. Nominal voltage is 36 or 37 depending on battery used.

# A Better Yard Starts Here

## ONE BATTERY, ONE POWERFUL SYSTEM

CS300

PS250



EX600

PS600

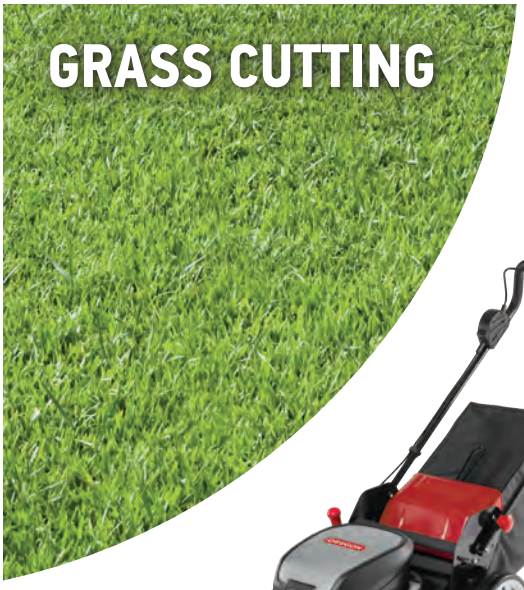

ST600

ST275-GSL

LM400

LM300

## PowerNow™ Lithium Ion Battery Packs

The Oregon® battery platform provides all the power you need to get the job done. Our PowerNow premium cell technology ensures a long run time. Superior construction makes all our batteries rugged and durable.

### PREMIUM CELL TECHNOLOGY
Light-weight premium cells combine reliable performance & energy capacity.

### CONSTANT NO-FADE POWER
Maintain constant power through discharge.

### RETAINS CHARGE
Retains a charge even after months of storage.

### CONSISTENT CAPACITY
Charge maintenance and full discharge is not necessary to retain consistent capacity throughout the life of the battery (no memory effect).

**2.6 Ah = up to 325 cuts**
2"-3" diameter wood on the PS250 Pole Saw

### B425E

| OREGON | Description |
|---|---|
| **585527** | Battery Pack, 2.6 Ah, Model B425E |

**4.0 Ah = up to 500 cuts**
2"-3" diameter wood on the PS250 Pole Saw

### B600E

| OREGON | Description |
|---|---|
| **548208** | Battery Pack, 4.0 Ah, Model B600E |

**6.0 Ah = up to 750 cuts**
2"-3" diameter wood on the PS250 Pole Saw

### B650E

| OREGON | Description |
|---|---|
| **583684** | Battery Pack, 6.0 Ah, Model B650E |

### C650 Battery Charger

| OREGON | Description |
|---|---|
| **594076** | Replacement C650 - Charger |

### C750 Rapid Battery Charger

| OREGON | Description |
|---|---|
| **548185** | Replacement C750 - Rapid Charger |

| | C650 Standard Charger | C750 Rapid Charger |
|---|---|---|
| B425E | 90 min. | 30 min. |
| B600E | 140 min. | 60 min. |
| B650E | 240 min. | 90 min. |

## Cordless Multi-Attachment System

A versatile and powerful system designed for homeowners wanting to save time and money. The Oregon® Multi-Attachment System puts you in charge — choose only the attachments you need and build a customized system for you and your yard. The Oregon attachments work seamlessly with the Powerhead, and the brushless motor delivers sustainable power. Within seconds, you can switch from pruning your trees to trimming the grass around your flower bed.

### POWERFUL

- Brushless motor delivers more power and enhanced torque for higher efficiency.
- Plenty of power to trim and edge a large yard.
- Consistent lithium ion performance.

### EFFICIENT

- A single power source — no need to maintain multiple gas engines.
- Use any Oregon 40V MAX* battery.

### VERSATILE

- One system that uses your choice of Oregon interchangeable attachments.
- Seamlessly switch from high-volume jobs to precision work.
- Swap out one tool for another within seconds.

### STORABLE

- Takes up less space in your garage or shed.
- Fits easily in a truck bed or cargo space.
- Lighter weight makes it easy to move.

**1 Powerhead**

**4 Attachments**

POLE SAW

STRING TRIMMER

EDGER

EXTENDED HEDGE TRIMMER

40V MAX LITHIUM-ION

## Cordless Multi-Attachment System

### PH600 Powerhead

| OREGON | Description |
|---|---|
| **590986** | Multi-Attachment Powerhead - Tool only no attachment, no battery, no charger |
| **594067** | Multi-Attachment Powerhead - E6 Kit 2.6 Ah battery, standard charger |
| **594068** | Multi-Attachment Powerhead - A6 Kit 4.0 Ah battery, standard charger |
| **594075** | Multi-Attachment Powerhead - R7 Kit 6.0 Ah battery, rapid charger |

**SPECIFICATIONS**

- Brushless motor
- Compatible with all Oregon 40V MAX* batteries
- Variable speed trigger
- Transportation lock out
- Harness included
- Weighs 9.7 lbs (with battery)

### PS600 Pole Saw - 590990

**6.0 Ah = up to 750 cuts**
**4.0 Ah = up to 500 cuts**
**2.6 Ah = up to 325 cuts**

**SPECIFICATIONS**

- 10" Oregon bar
- 1/4 pitch Oregon chain 25AP
- Length 6'8"
- Length with EX600 extension 8'11"
- Oil tank capacity 3.4 oz (100 ml)
- Only 4 lbs

### EX600 Extension- 590988

**SPECIFICATIONS**

- For Oregon Hedge Trimmers and Pole Saw Multi-attachments
- 28" (70 cm)
- Only 1.4 lbs

# Cordless Multi-Attachment System

## HT600 Extended Hedge Trimmer - 590991

6.0 Ah = 65 to 70 min
4.0 Ah = 45 to 50 min
2.6 Ah = 30 to 35 min

### SPECIFICATIONS

- 15" (38 cm) blade
- Length 7'4"
- Length 9'7" with EX600 extension
- 3/5" (15 mm) tooth spacing
- 120º rotation, 7 positions
- Only 5.5 lbs

## ST600 String Trimmer- 590992

6.0 Ah = up to 30 min
4.0 Ah = up to 20 min
2.6 Ah = up to 15 min

### SPECIFICATIONS

- 14" (36 cm) cutting diameter
- Gator® SpeedLoad™ head
- .080" Gator SpeedLoad line
- 5500 r/min.
- Only 3.7 lbs

## EG600 Edger - 590989

6.0 Ah = up to 250 yards
4.0 Ah = up to 150 yards
2.6 Ah = up to 100 yards

### SPECIFICATIONS

- 8" (20 cm) cutting blade
- Oregon blade
- Only 5 lbs

## How to Choose Your System

# #1

## PICK YOUR POWER KIT

**Powerhead**
Tool Only
If you already have an Oregon® battery and charger

**Powerhead kit E6**
Powerhead
2.6 Ah Battery
Standard Charger

**Powerhead kit A6**
Powerhead
4.0 Ah Battery
Standard Charger

50% more run time than the E6 kit

**Powerhead kit R7**
Powerhead
6.0 Ah Battery
Rapid Charger

130% more run time than the E6 kit and faster recharge time with the rapid charger

# #2

## PICK YOUR ATTACHMENTS

PS600 ST600 EG600 HT600

## ACCESSORIES

Get an extension ($39) for your Multi-Attachment Pole Saw and Multi-Attachment extended Hedge Trimmer.

## CS300 Chainsaw

40V MAX LITHIUM-ION

**6.0 Ah = up to 600 cuts**
**4.0 Ah = up to 400 cuts**
**2.6 Ah = up to 250 cuts**
In 2"-3" material.

The Oregon® chainsaw starts instantly and easily cuts through trees and tree limbs. The brushless motor delivers a powerful combination of speed and torque, and our premium 40V MAX* battery ensures zero emissions. Sharpen the chain in seconds with the built-in PowerSharp® system.

| OREGON | Description |
|---|---|
| **572627** | Chainsaw CS300 - Tool Only<br>40V MAX* chainsaw, 16" (40 cm) guide bar, PowerSharp chain |
| **572626** | Chainsaw Kit CS300 - E6<br>2.6 Ah battery, standard charger |
| **572625** | Chainsaw Kit CS300 - A6<br>4.0 Ah battery, standard charger |
| **586622** | Chainsaw Kit CS300 - R7<br>6.0 Ah battery, rapid charger |

### HIGH-PERFORMANCE
The chainsaw's innovative brushless motor delivers high power and torque. You can quickly and easily adjust the chain with the tool-less tensioner.

### ONBOARD POWERSHARP
Sharpen on the saw, and on the job, in seconds.™

### ERGONOMICALLY DESIGNED
Weighing only 12 lbs, the chainsaw is designed to distribute weight evenly for easy handling.

### SPECIFICATIONS
- 16" (40 cm) bar length.
- Automatic oiler with 4.1 oz tank capacity.
- No load chain speed 2796 fpm.
- Only 12 lbs (with battery).

## PowerSharp Sharpening System

With the built-in PowerSharp sharpening system, there's no more downtime due to dull chain. Simply pull the PowerSharp lever for 3–5 seconds and the chain works like new. PowerSharp: sharpen on the saw, on the job, in seconds.

*(see pages 136-137 of the FOR section of the catalog for more detail)*

## LM300 Lawn Mower

40V MAX LITHIUM-ION

**6.0 Ah = up to 7000 ft²**
**4.0 Ah = up to 5000 ft²**
Works with all Oregon batteries

The LM300 cuts large grass areas quickly and efficiently. The instant start and 6 adjustable cutting positions allow you to work in every season and on every type of lawn. The brushless motor, battery, and debris bag give you the power and capacity to clear your yard easily and efficiently.

| OREGON | Description |
|---|---|
| **591083** | Lawn Mower LM300 - Tool only |
| **591082** | Lawn Mower Kit LM300- A6<br>4.0 Ah battery, standard charger |
| **591081** | Lawn Mower Kit LM300 - R7<br>6.0 Ah battery, rapid charger |

### GREAT FOR SMALL TO MEDIUM YARDS

The LM300 starts instantly and makes cutting time more enjoyable. The brushless motor offers a combination of high-torque and efficiency, offering a quality cut and long run time (up to 7000 ft² with a full battery charge).

### LIGHT-WEIGHT/OPTIMAL BALANCE

The LM300 is light-weight (only 35.9 lbs with battery) and perfect for mowing around flower beds.

### SPECIFICATIONS

- Brushless motor
- 16" (40 cm) cutting width
- 13.2 gal (1.4 bushel) debris bag
- 35.9 lbs with battery
- 6 Cutting positions

**16" (40 cm) cutting width**

**Easily adjust cutting height**

**13.2 gal debris bag**

## NEW LM400 Lawn Mower

40V MAX LITHIUM-ION

**6.0 Ah = up to 10,000 ft²**
**4.0 Ah = up to 7,000 ft²**
With two batteries
Works with all Oregon batteries

Vertical Storage Position

Oregon's new LM400 Lawn Mower possesses the power capacity to cut any residential yard. The LM400's tough steel deck gives it the muscular look of a gas mower — without emissions and excess noise. The LM400 can run on only one battery, but it has the capacity for two — which the convenience of extended run time. The LM400 has a vertical storage position, so it will take up minimal space in your garage.

| OREGON | Description |
|---|---|
| **591080** | Lawn Mower LM400 - Tool only |
| **591079** | Lawn Mower Kit LM400 - A6<br>4.0 Ah battery, standard charger |
| **591078** | Lawn Mower Kit LM400 - R7<br>6.0 Ah battery, rapid charger |
| **591077** | Lawn Mower Kit LM400 - X7<br>Two 4.0 Ah batteries, rapid charger |

### HIGH PERFORMANCE

Cut more grass with fewer passes. The LM400's brushless motor delivers enhanced torque that allows you to cut high grass and tough vegetation on rough terrain. The LM400's 20" cutting diameter offers a wider cut for larger yards.

### SPECIFICATIONS

- Brushless motor
- Steel deck
- 20" (51 cm) cutting width
- 15.9 lbs with one battery
- Vertical storage position
- Dual battery for extended run times
- 6 cutting positions
- Bagging / rear discharge / side discharge

**20" (51 cm) cutting width**

**Dual battery: Operates with 1 or 2 batteries**

**Side discharge**

## BL300 Hand-Held Blower

40V MAX LITHIUM-ION

**6.0 Ah = up to 120 min.**
When running on the lowest trigger setting, 22 min on full trigger, 12 min on turbo button

**4.0 Ah = up to 90 min.**
When running on lowest trigger setting 15 min. on full trigger 8 min. on turbo button

Large areas of leaves and debris can be easily cleared away with the Oregon® Cordless Blower. The combination of superior air volume, (up to 507 cfm) and speed (up to 131.5 mph) make this the ultimate debris-clearing machine. The cordless blower's low decibel rating, ergonomics, and portablity make it an ideal tool for all-day jobs.

| OREGON | Description |
|---|---|
| **572619** | Blower BL300 – Tool Only |
| **572621** | Blower Kit BL300 - A6<br>4.0 Ah battery, standard charger |
| **586646** | Blower Kit BL300 - R7<br>6.0 Ah battery, rapid charger |

### LOW NOISE
The BL300 offers a powerful, low noise solution to clean-up and debris removal. With only 64.6 dB (bystander measure) on Turbo mode, the BL300 allows you to get the job done, without bothering your neighbors.

### HIGH-PERFORMANCE
The innovative brushless motor and axial fan offer a powerful combination of performance and efficiency. The variable speed trigger allows the user to stay in complete control by only using the power required by the job. The Cordless Blower delivers up to 507 cfm of air per hour.

### ERGONOMICALLY DESIGNED
The Cordless Blower is designed for extended use. The comfortable handle and shoulder strap make it ideal for large areas.

### SPECIFICATIONS
- Only 8.9 lbs (with battery).
- Superior air volume (up to 507 cfm of air per hour).
- Exceptional air speed (up to 131.5 mph).
- Variable speed trigger.

**Well balanced**

**Convenient built-in holes (strap included)**

**Turbo button and variable speed trigger**

## ST275-GSL Trimmer/Edger

40V MAX LITHIUM-ION

**6.0 Ah = approx. 45–60 min.**
**4.0 Ah = up to 30-40 min.**
**2.6 Ah = up to 20-30 min.**
Depending on material being cut and user technique

Cut through tough vegetation and beautify your landscape; the Trimmer/Edger's patented gear drive technology allow you to do both.

| OREGON | Description |
|---|---|
| **582152** | Trimmer / Edger ST275 - Tool Only<br>With Gator SpeedLoad trimmer head |
| **590498** | Trimmer / Edger Kit ST275 - E6<br>2.6 Ah battery pack, standard charger |
| **581207** | Trimmer / Edger Kit ST275 - A6<br>4.0 Ah battery pack, standard charger |
| **586726** | Trimmer / Edger Kit ST275 - R7<br>6.0 Ah battery pack, rapid charger |

### 2-IN-1 TRIMMER / EDGER
Switch quickly from timmer to edger.

### HIGH TORQUE AND POWER
Patent gear drive technology provides high performance and torque to cut through thick vegetation. The variable throttle allows the user to maintain control.
*US patent numbers 6,301,788 and 6,014,812 used under license.*

### ERGONOMICALLY DESIGNED
- Designed for comfort and extended use.
- Sling included to help reduce operator fatigue.

SPECIFICATIONS
- Only 9.4 lbs (with battery).
- 13" cutting diameter
- 6250 rpm no-load cutting speed.
- Gator® SpeedLoadTM trimmer head

## Gator SpeedLoad Head

**FAST.** Fastest loading system ever. Reduce the whole process from 5 minutes to a few seconds.

**EASY.** Open the head. Place the disc. Close the head.

**DURABLE.** Long lasting heat-treated disc, twice as long as standards lines.

## PS250 Pole Saw

40V MAX LITHIUM-ION

**6.0 Ah = up to 750 cuts**
**4.0 Ah = up to 500 cuts**
**2.6 Ah = up to 325 cuts**
In 2" - 3" material

The Oregon® Pole Saw gives you precision, power, and a telescoping reach for all trimmming and pruning jobs. The shaft allows up to 14'-15' of access, while the premium battery pack and mid-mount motor provide you with the longevity and comfort for a long day's work.

| OREGON | Description |
|---|---|
| **563456** | Pole Saw PS250 - Tool Only<br>40V MAX* pole saw, 8" (20 cm) guide bar, Microlite™ narrow kerf chain |
| **563455** | Pole Saw Kit PS250 - E6<br>2.6 Ah battery, standard charger |
| **563454** | Pole Saw Kit PS250 - A6<br>4.0 Ah battery, standard charger |
| **586642** | Pole Saw Kit PS250 - R7<br>6.0 Ah battery, rapid charger |

### EXTENDABLE REACH
Extend up to 10'2" (3.1 mm) for a reach of up to 14'-15' (4.5m) from the ground level.**

### MID-MOUNT MOTOR
The mid-mount motor places the pole saw's weight (and size) between your hands. This reduces the size of the cutting head — making it easier to reach hard-to-reach-cuts, and reduces the weight at the end of the pole — improving ergonomics and reducing fatique.

### ERGONOMICALLY DESIGNED
In addition to the mid-mount motor, the pole saw weighs only 13.5 lbs with the battery, which means better balance and less fatigue. A shoulder strap is included for additional comfort.

### SPECIFICATIONS
- Only 13.5 lbs (with battery).
- Chain speed: 2817 fpm.
- 3/8" Microlite narrow kerf 90PX chain.
- 8" (20 cm) bar.

*** Based on estimate for a 5'10" (1.8 m) individual operating at a 60 degree angle + / - 18 degrees.*

Slim, compact head

Mid-mount motor

Adjustable collar

Branch hook

## HT250 Hedge Trimmer

40V MAX LITHIUM-ION

**6.0 Ah = up to 150 min.**
**4.0 Ah = up to 100 min.**
**2.6 Ah = up to 60 min.**
Depending on material being cut and user technique.

The Oregon® Hedge Trimmer is light enough for you to tackle tall and wide hedges as well as rows of smaller hedges. The laser-cut blades will cut neat and precise formations while maintaining the health of the plants.

| OREGON | Description |
|---|---|
| **551275** | Hedge Trimmer HT250 - Tool Only |
| **558812** | Hedge Trimmer Kit HT250 - E6<br>2.6 Ah battery, standard charger |
| **585212** | Hedge Trimmer Kit HT250 - A6<br>4.0 Ah battery, standard charger |
| **567040** | Hedge Trimmer Kit HT250 - A7<br>4.0 Ah Battery, Rapid Charger |

### 26" (60 CM) LASER-CUT BLADES

Laser-cut blades mean cleaner cuts and healthier plants, while the low noise (74 dB) offers a combination of superior performance and operator comfort.

### ERGONOMICALLY DESIGNED

Large, comfortable handles. Dual action design for low vibration.

### SPECIFICATIONS

- Only 9.8 lbs (with battery).
- 2750 strokes per minute maximum cutting speed.
- Cuts up to a 3/4" branch.
- Variable speed trigger.

## Premium Blade Technology

Engineered with premium blade technology to outlast the competition. Rugged and durable, the Oregon HT250 Hedge Trimmer's blades are perfect for trimming and sculpting.

## WL275 Portable Light

40V MAX LITHIUM-ION

**6.0 Ah = approx. 36 hrs. on LOW**
**6.0 Ah = approx. 18 hrs. on HIGH**
**AC Power Cord = Continuous run time**

Battery not included. Works with any Oregon Cordless 40V MAX battery pack.

The Oregon® Portable Light keeps work sites illuminated well after the sun sets. Our unique power options give you the flexibility to choose between the included AC power cord or inserting an Oregon PowerNow™ Battery Pack.

| OREGON | Description |
|---|---|
| **581611** | LED Portable Light WL275 - Tool Only |

### HIGH-PERFORMANCE
1091 Lumens / 12 hours on HIGH
584 Lumens / 24 hours on LOW

### PORTABLE
Use the provided AC power cord or go portable with any Oregon Cordless Tool System Battery Pack.

### DURABLE AND CONVENIENT
The durable fame and multiple angle adjustments offer ideal work site performance.

**Multiple adjustments for 90˚+ light angle options**

** Fully charged battery voltage measured without a workload is 40 volts. Nominal voltage is 36 or 37 depending on battery used.*

## Chainsaw Tool Bag

The Tool Bag is designed to protect, carry, and store an Oregon chainsaw or blower with accessories.

- Internal lining and outside pocket is water and oil resistant
- Rugged construction resists abrasion and wear
- Extra-large, wide-mouth opening for easy access and visibility
- 7 internal and 2 external pockets neatly organize your battery, charger, and other accessories
- 27" L x 12" W x 12" H (68.6 cm x 30.5 cm x 30.5 cm)
- Comfortable fitting and light weight

| OREGON | Description |
|---|---|
| **551276** | Tool Carry Bag |

## Back Pack

The Backpack is ideal to carry extra batteries, or use it for your computer/tablet:

- Size: 13.5" x 4" x 19"
- Laptop & Tablet pocket inside
- Reflectives on front and strap

| OREGON | Description |
|---|---|
| **593441** | Backpack |

## Corded Chainsaws

**CS1500**
The only self-sharpening corded electric chainsaw on the market

**CS1400**

Oregon's high-power, 15 amp CS1500 chainsaw is the only corded electric chainsaw on the market with a chain that can sharpen itself. The CS1500 has all the traditional conveniences of an electric saw — instant start with the pull of a trigger, minimal maintenance, low noise and silent between cuts — and takes it one step further by incorporating the built-in PowerSharp® chain sharpening system.

15 amp CS1400 chainsaw offer all the benefit of the CS1500 except that the PowerSharp system is replaced by an Oregon ControlCut high performance chain. + 33% longer semi Chisel cutters, suitable for all-day cutting. Low vibration, kick-back reduction. CS1400 is available with a 16" guide bar

| OREGON | Description |
|---|---|
| **603352** | Self-Sharpening Electric Chainsaw, Model CS1500 Includes: chainsaw, 18" guide bar, and PowerSharp chain. Fully assembled |
| **603353** | Self-Sharpening Electric Chainsaw, Model CS1500 Includes: chainsaw, 18" guide bar, and PowerSharp chain. Shorter box, semi-assembled |
| **603348** | Electric Chainsaw, Model CS1400 Includes : chainsaw, 16" guide bar, and ControlCut chain. Short box, semi-assembled |

### INSTANT START

- No pull cords
- No warm up
- No gas-oil mixing
- No emissions

### LOW NOISE

- Much quieter than a gas saw
- Silent between cuts

### ERGONOMIC DESIGN

- Light-weight and balanced
- Low vibration
- Over-mold comfort handle

### SPECIFICATIONS

- Bar length: CS1500: 18" (45cm); CS1400: 16" (40cm)
- CS1500: PowerSharp chain, 3/8 in. Low Profile® with .050" gauge
- CS1400: ControlCut 91PXL056G chain, 3/8 in. with .050 gauge
- Automatic oiler with view-through window
- 15 amp rating
- 120 Volt ~ 60 Hz
- No load chain speed 2888 FPM
- Weighs 12.9 lbs (5,85 kg)

## PowerSharp Sharpening System

With the built-in PowerSharp Sharpening System, there's no more downtime due to dull chain. Simply pull the PowerSharp lever for 3 – 5 seconds and the chain works like new. With PowerSharp, you can sharpen on the saw, on the job, in seconds®.

*(see pages 136-137 of the FOR section of the catalog for more detail)*

## PowerSharp® Saw Chain for CS250, CS300 & CS1500

The Oregon PowerSharp® sharpening system means no more downtime due to dull chain. PowerSharp allows you to sharpen on the saw, on the job, in seconds®.

- Sharpens in 3 – 5 seconds
- No extra tools needed for sharpening
- 10 – 20 sharpenings per chain
- 3/8" Low Profile™ / .050" gauge

| OREGON | Description |
|---|---|
| **560507** | CS250, CS300 Replacement 14" (35 cm) PowerSharp Saw Chain (includes sharpening stone) |
| **560510** | CS300, CS1500 Replacement 16" (40 cm) PowerSharp Saw Chain (includes sharpening stone) |
| **571037** | CS1500 Replacement 18" (50 cm) PowerSharp Saw Chain (includes sharpening stone) |

## Saw Chain for PS250

| OREGON | Description |
|---|---|
| **90PX034G** | 8" (20 cm) Replacement Saw Chain • Micro-Lite™, Narrow Kerf |

## Saw Chain for PS600

| OREGON | Description |
|---|---|
| **25AP058G** | 10" (25 cm) Replacement Saw Chain • Micro Chisel® |

## Saw Chain for CS1400

| OREGON | Description |
|---|---|
| **91PXL056G** | 16" (40cm) Replacement Saw Chain. ControlCut chain. |

## Guide Bar for CS250, CS300 & CS1500

| OREGON | Description |
|---|---|
| **140SDEA041** | 14" (35 cm) Replacement Guide Bar - Model CS250, CS300 |
| **160SDEA041** | 16" (40 cm) Replacement Guide Bar - Model CS300, CS1500 |
| **180SDEA041** | 18" (50 cm) Replacement Guide Bar - Model CS1500 |

## Guide Bar for PS250, PS600

| OREGON | Description |
|---|---|
| **084MLEA041** | 8" (20 cm) Replacement Guide Bar - Model PS250 |
| **100SDAA041** | 10" (25 cm) Replacement Guide Bar - Model PS600 |

## ST275 Gator® SpeedLoad™ Replacement Trimmer Head Kit

**4-1/4" Gator SpeedLoad Trimmer Head for ST275**
Use with Oregon ST275 Cordless Trimmer/Edger. Complete kit contains adaptor and shield for mounting on ST275 only. Cannot be used on ST250. Use with Oregon small diameter replacement discs.

| OREGON | Description |
|---|---|
| **581647** | ST275 GSL Replacement Head Kit<br>(For ST275 only, includes grass wrap shroud) |

## ST600 Gator® SpeedLoad™ Replacement Trimmer Head Kit

**4-1/4" Gator SpeedLoad Trimmer Head for ST600**
Use with Oregon ST600 String Trimmer attachment. Complete kit contains adaptor and shied for mounting on ST600 only. Cannot be used on ST250 or ST275-GSL. Use with Oregon 0.080" Gator SpeedLoad replacement discs.

| OREGON | Description |
|---|---|
| **595897** | ST600 Replacement Head Kit<br>(For ST600 only, includes grass wrap shroud) |

## .080" Replacement Trimmer Line Gator SpeedLoad

| OREGON | Description |
|---|---|
| **24-280-03** | (3) – 0.080" (2.4 mm), Small Diameter Disks |
| **24-280-10** | (10) – 0.080" (2.4 mm), Small Diameter Disks |
| **24-280-25** | (25) – 0.080" (2.4 mm), Small Diameter Disks |

## ST275 Quick Load Replacement Trimmer Head

This quick loading trimmer head was designed specifically for use with the Oregon® ST275 Trimmer/Edger. The head has many exclusive features to improve run time, reduce noise, and improve cutting performance.

- Comes loaded with .080" Oregon Platinum Gatorline™
- Easy line loading without taking apart the head
- Bump knob is designed to reduce accidental bumping, feeding line only when you need it
- Spool holds up to 12 ft. (30.5 cm) of .080" trimmer line

| OREGON | Description |
|---|---|
| **564849** | ST275 quick loading replacement trimmer head with line Bump feed, easy load, 2 line. |

## .080" Platinum Gatorline™ Trimmer Line

Platinum Gatorline solves many of the problems of traditional trimmer line. The armored exterior is more resistant to breakage and also shields a highly flexible co-polymer core for outstanding durability.

- Consistent line diameter
- Armored exterior
- Flexible core
- SuperTwist®

| OREGON | Description |
|---|---|
| **20-117** | 1/2 lb. Donut, Approximately 207 ft. (63.1 m) |
| **20-118** | 1 lb. Donut, Approximately 414 ft. (126.2 m) |
| **20-119** | 3 lb. Spool, Approximately 1244 ft. (379.2 m) |

## Point of Purchase Display

### MULTI-ATTACHMENT DISPLAY KIT

**603717 D**

Get your shed or garage organized with the Oregon Multi-Attachment display.

- The kit includes one header, one hook for PH600 Powerhead and 3 hooks for attachments
- 3 adaptors are included to hang the display on wire grid, slatwall, pegboard, or wall
- 23" W x 8" H

| OREGON | No. | Component | QTY. |
|---|---|---|---|
| **598136** | A | Display Frame | 1 |
| **598138** | B | Attachment Hook | 1 |
| **598137** | C | Powerhead Hook | 1 |
| **603717** | D | Multi-Attachment Display Kit - End Users | 1 |

Ⓐ

Ⓑ

Ⓒ

## Point of Purchase Display

### 3-PANEL DISPLAY KIT

The triple panel, 2' x 6' x 11", black, triangular SlatGrid display offers the ultimate solution for displaying Oregon Cordless Tool System. The kit comes with custom hooks for hanging the BL300, HT250, PS250 and ST275, as well as 2 shelves that can be used to showcase the CS300 Chainsaw and the WL275 Portable Light.

| OREGON | Description |
|---|---|
| **560842** | OCTS 3 Panel Display Kit |

| Qty | Kit Components |
|---|---|
| 3 | OCTS 24"x72" Slatgrid, BL |
| 3 | OCTS 22"x7" Sign Holder, BL |
| 3 | OCTS Slatgrid 22"x7" Sign |
| 2 | OCTS Slatgrid ST Hook, BL |
| 1 | OCTS Slatgrid HT Hook, BL |
| 1 | OCTS Slatgrid BL Hook, BL |
| 1 | OCTS Slatgrid PS Hook, BL |
| 3 | OCTS Slatgrid Lit 8.5"x11", BL |
| 1 | OCTS 23.5"x13.5" Shelf, BL |
| 1 | OCTS 12"x8" Self, BL |
| 9 | OCTS Grid Clip, BL |
| 10 | 4" Peg hook, BL |

### INDIVIDUAL COMPONENTS

Available for individual order to enhance existing displays.

| OREGON | No. | Component | QTY. |
|---|---|---|---|
| **560840** | A | OCTS Slatgrid 22"x7" Sign | 1 |
| **560831** | B | OCTS 24"x72" Slatgrid, BL | 1 |
| **560833** | C | OCTS 22"x7" Sign Holder, BL | 1 |
| **560834** | D | OCTS Slatgrid Lit 8.5"x11", BL | 1 |
| **561214** | E | OCTS 12"x8" Shelf, BL | 1 |
| **560838** | F | OCTS 12"x24" Basket, BL | 1 |
| **560839** | G | OCTS 23.5"x13.5" Shelf, BL | 1 |
| **561215** | H | OCTS 6" Peg Hook, BL | 1 |
| **574431** | I | OCTS Slatgrid BL Hook, BL | 1 |
| **560837** | J | OCTS Slatgrid ST Hook, BL | 1 |
| **560832** | K | OCTS Slatgrid T Leg, Pair, BL | 1 |
| **560830** | L | OCTS Slatgrid L Leg, Pair, BL | 1 |
| **566442** | M | OCTS Slatgrid PS Hook, BL | 1 |
| **560836** | N | OCTS Slatgrid HT Hook, BL | 1 |
| **561218** | O | OCTS Grid Clip, BL | 1 |
| **560829** | P | OCTS Slatgrid Tri-Base, BL | 1 |
| **561249** | Q | OCTS Slatgrid Pinwheel, BL | 1 |

## Point of Purchase Display

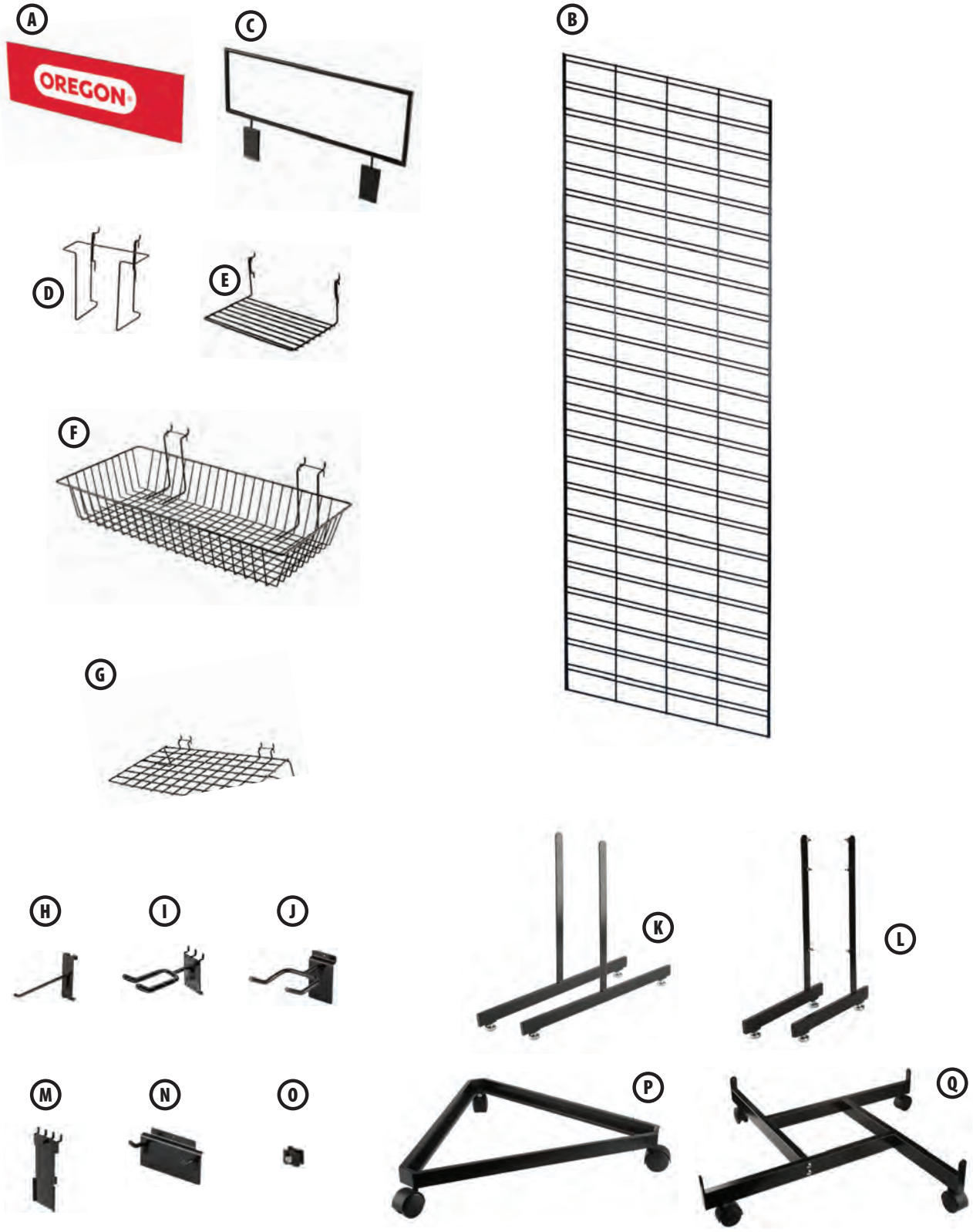

# Outdoor Power Equipment

# 120V Professional Series™

## THIS IS REAL POWER

Many cordless products have been labeled professional-grade, but cordless power has never measured up to the performance of traditional, commercial gas equipment—until now. The new Oregon 120V Professional Series is engineered with up to 15% more power than gas-fueled equipment—driving more productivity than ever before.

Introducing Oregon Professional Series—The next evolution of battery technology.

### Professional Grade Cordless Equipment
Finally, there's a line of professional-grade tools that offer all the benefits of battery, without sacrificing power, performance, or durability.

### Quietly Powerful
Engineered from the ground up with low noise in mind, these tools have been designed so your work can be seen and not heard.

### More Power and Torque
Engineered to offer up to 15% more power than gas-fueled equipment.

### Weather Ready
With an IP56 rating, water and dust seals on electrical connections and components mean these tools are ready to work, rain or shine.

### Increased Productivity
Efficient power offers extended run times with no refueling stops, while ultra-quiet operation allows early start times at noise-sensitive sites.

### Commercial-Grade Durability
Tested tough to endure the rigours of professional use.

# BL120VX Leaf Blower

Built to get the job done quickly and quietly with an amazing max-bystander-noise-rating of 59dB(A) for noise-restricted sites, the zero-emission BL120VX was engineered with the professional in mind. With a variable speed trigger, fatigue-reducing throttle lock and a blow force rating of 22N, you're ready for real work.

| OREGON | Description |
|---|---|
| **BL120VX-NA** | Backpack Blower |

**1400 W** | **UL & IP56** | **≤ 45 Min. Continuous at full trigger** | **22 N 200 MPH 526 CFM**

## Specifications

| | | |
|---|---|---|
| Tool Weight *Without Battery* | | 20.5 lbs. |
| Run Time *With BX975 Battery at Full Trigger* | Stealth Mode | 45 minutes |
| | High Output | 30 minutes |
| Power Output | Watts | 1400 W |
| | Newtons | 22 N |
| Speed | Stealth Mode | 175 MPH |
| | High Output | 200 MPH |
| Air Volume | High Output | 526 CFM |
| Noise level *ANSI B175.2 bystander rating* | Stealth Mode | 57 dB(A) |
| | High Output | 59 dB(A) |

## Certifications

| | |
|---|---|
| Ingress Protection | IP56 |
| UL Certification | Yes |
| Emissions Certification | California Air Resource Board: Professional Grade Zero Emission Equipment |

## Warranty

| | |
|---|---|
| Commercial Grade | 2-year |

# ST120VX String Trimmer

Designed to offer the professional uncompromising performance, the ST120VX delivers exceptional torque-to-power and a full 16.5" cutting swath. The backpack battery design eliminates weight on the tool, easing fatigue during long sessions. Whisper-quiet with zero emissions, the full line is weather-ready and tough enough to move with you from site to site.

| OREGON | Description |
|---|---|
| **ST120VX-NA** | String Trimmer |

**1200 W**
**2.24 Nm**

**UL & IP56**

**≤ 4 Hours**
**Continuous at**
**Full Trigger**

**16.5"**
**Cutting**

## *Cutting System*

**Professional grade Oregon® Lightning Load® bump-feed head with .095 Magnum Gatorline**

## Specifications

| | | |
|---|---|---|
| Tool Weight | | 12.1 lbs. |
| Cutting Swath | | 16.5" |
| Tool Length | | 73.5" |
| Run Time *With BX975 Battery at Full Trigger* | Stealth Mode | 4.0 hours |
| | High Output | 2.3 hours |
| Power Output | Watts | 1200 W |
| | Newton Meter (Nm) | 2.24 Nm |
| Speed | Stealth Mode | 4400 RPM |
| | High Output | 5500 RPM |
| Noise level *ANSI B175.2 bystander rating* | Stealth Mode | 52 dB(A) |
| | High Output | 62 dB(A) |

## Certifications

| | |
|---|---|
| Ingress Protection | IP56 |
| UL Certification | Yes |
| Emissions Certification | California Air Resource Board: Professional Grade Zero Emission Equipment |

## Warranty

| | |
|---|---|
| Commercial Grade | 2-year |

# EG120VX Edger

For clean edge lines the EG120VX edger delivers true commercial performance. Its 8" blade and heavy-duty gear box don't mind mixing it up with tough soil conditions, and it runs whisper-quiet with zero emissions. Designed for use in any weather, operators can get up to 7 hours of run time with the BX975 backpack battery using Stealth Mode™.

| OREGON | Description |
|---|---|
| **EG120VX-NA** | Edger |

**1200 W**
**3.34 Nm**

**UL & IP56**

**≤ 7 Hours**
**Continuous at**
**Full Trigger**

**8"**
**Blade**

## Specifications

| | | |
|---|---|---|
| Tool Weight | | 13.3 lbs. |
| Metal Blade | | 8" |
| Tool Length | | 74" |
| Run Time *With BX975 Battery at Full Trigger* | Stealth Mode | 7.0 hours |
| | High Output | 5.6 hours |
| Power Output | Watts | 1200 W |
| | Newton Meter (Nm) | 3.34 Nm |
| Speed | Stealth Mode | 2948 RPM |
| | High Output | 3685 RPM |
| Noise level *ANSI B175.2 bystander rating* | Stealth Mode | 55 dB(A) |
| | High Output | 58 dB(A) |

## Certifications

| | |
|---|---|
| Ingress Protection | IP56 |
| UL Certification | Yes |
| Emissions Certification | California Air Resource Board: Blue Sky |

## Warranty

| | |
|---|---|
| Commercial Grade | 2-year |

# EHT120VX Hedge Trimmer

The versatile EHT120VX Extended Hedge Trimmer offers quiet, zero-emissions trimming with the balance and power to handle professional jobs. The 20" blade, extended length, and full 130-degree rotating attachment head allow trimming the tops of tall and wide hedges and ground cover.

| OREGON | Description |
|---|---|
| **EHT120VX-NA** | Hedge Trimmer |

**1200 W**
**8.64 Nm**

**UL & IP56**

**≤ 5.7 Hours Continuous at Full Trigger**

## Specifications

| | | |
|---|---|---|
| Tool Weight | | 14.4 lbs. |
| Blade Length | | 20" |
| Articulation | | 130°/multiple positions |
| Tool Length | | 86" |
| Run Time *With BX975 Battery at Full Trigger* | Stealth Mode | 5.7 hours |
| | High Output | 4.0 hour |
| Power Output | Watts | 1200 W |
| | Newton Meter (Nm) | 8.64 Nm |
| Speed | Stealth Mode | 2280 strokes/ minute |
| | High Output | 2950 strokes/ minute |
| Noise level *ANSI B175.2 bystander rating* | Stealth Mode | 54 dB(A) |
| | High Output | 60 dB(A) |

## Certifications

| | |
|---|---|
| Ingress Protection | IP56 |
| UL Certification | Yes |
| Emissions Certification | California Air Resource Board: Professional Grade Zero Emission Equipment |

## Warranty

| | |
|---|---|
| Commercial Grade | 2-year |

# Battery Backpack

The Oregon Professional Series Softshell Backpack in black or safety yellow is engineered to carry the weight of the battery close to the operator's core, removing battery weight from the tool and improving productivity, maneuverability, and overall ergonomics.

| OREGON | Description |
|---|---|
| **BPBXOR01-UV** | Backpack Black |
| **BPBXSY01-UV** | Backpack Safety Yellow |

BPBXOR01-UV BPBXSY01-UV

# 120V Lithium Ion Batteries

Oregon Professional Series batteries are engineered to offer the run time needed by professional landscapers. The large-capacity backpack design eliminates weight from the equipment, improving maneuverability and productivity. The BX975 battery packs 9.0 amp hours of capacity for 972 watt-hours of power; the BX650 battery packs 6.0 amp hours of capacity for 648 watt-hours of power to get the job done.

BX975 BX650

| OREGON | Description |
|---|---|
| **BX975-UV** | BX975 Battery |
| **BX650-UV** | BX650 Battery |

**BX975**

**9 Ah 972 Wh** | **5 Hour Charge Time** | **UL & IP56**

**BX650**

**6 Ah 648 Wh** | **3 Hour Charge Time** | **UL & IP56**

CD01120VX

# Battery-Tool Power Cable

Featuring automotive-grade weatherized connections for use in any weather, the Oregon Professional Series Battery to Stick Power Cable connects to Oregon Professional Series batteries for all the power and run time the job demands.

| OREGON | Description |
|---|---|
| **CD01120VX-NA** | Battery-to-Stick Tool Power Cable |

**UL & IP56**

C1600

# Battery Charger

The C1600 Battery Charger offers efficient smart charging of 120V Professional Series batteries, actively monitoring battery health to ensure long life and optimal charging. The UL listed low power-draw design allows multiple batteries to charge on one 15 Amp circuit.

| OREGON | Description |
|---|---|
| **C1600-NA** | Battery Charger |

# OREGON LOG SPLITTERS - THE CHOICE OF PROS

## Our Log Splitter Family

### A log splitter for every job

Whether you are a weekend warrior or a production professional we have a log splitter to fit your needs.

### Versatile

Easy-to-use, easy to transport, we designed our log splitter to ensure you can get the job done.

### Strong

A full range of splitting force from 22-Ton splitter to 35-Ton, designed with ergonomic positions and built to last.

### Exclusive Convenience

The new Oregon 28-Ton Log Splitter features EXtend Split™ - an exclusive design feature that gives the operator a larger work area. Extend Split offers an improved and more comfortable cutting experience that can't be found anywhere else.

### FEATURES

- Fast cycle times for increased productivity
- Built-in log cradle design makes splitting wood easier by keeping log in place for hands-free operation
- Ergonomically positioned auto return valve for increased operator comfort and efficient splitting
- Boxed tongue with handle, designed for strength and maneuverability
- 8" (20.3 cm) 10" (25.4 cm) tall wedge has larger splitting surface
- Integrated stripper plates remove stuck logs from wedge upon return
- Solid-steel foot plate for increased strength

22-TON

## SPECIFICATIONS

- Tonnage: 22-Ton
- Wedge: 7" (17.8 cm) wedge
- Cycle time: 13 seconds
- Operation options: horizontal and vertical
- Log capacity: 26" (66 cm)
- Hydraulic capacity: 6.5 gallons (24.6 L)
- Tank Capacity: 5 gallons (18.9 L)
- Pump performance: 2-stage, 11 GPM pump
- Working height: 31.5" (80 cm)
- Weight: 595 lbs (270 kg)

## ENGINE OPTIONS

*All EPA approved*

**Honda GC190**

190cc

**Kohler SH265**

196cc

| OREGON | Description |
|---|---|
| S402022H0 | 22-Ton Log Splitter (Honda) |
| S402022K0 (shown) | 22-Ton Log Splitter (Kohler) |

# Features

### LOG SPLITTING FORCE

1. Auto-return valve speeds up the log splitting process.
2. Ergonomically positioned valve placement for increased operator comfort.
3. 4" X 24" (10.2 X 61 cm) cylinder capable of producing 22-tons of splitting force, makes this our most popular tonnage for splitting most logs.
4. The efficient 7" (17.8 cm) wedge is also 4-way wedge compatible.

### BUILT TO LAST

5. Integrated stripper plates and log cradle for rigidity; capable of removing stuck logs and holding logs secure for hands-free splitting.
6. Solid-steel foot piece designed for increased strength.
7. 2-stage 11 GPM pump for faster production.
8. 6.5 gallons (24.6 L) hydraulic capacity allows plenty of room for fluid to keep flowing and stay cool.

### VERSATILE & PORTABLE

9. 4.80" x 8.0" (12.3 cm x 20.30 cm) 45 MPH tires DOT certified.
10. Horizontal shaft engine opposite side of operator.
11. Spring-loaded 6" x 6" (15.2 cm X 15.2 cm) beam lock keeps beam secure.
12. Boxed tongue with rotating ground stand and handle gives solid support during splitting.
13. Optimized trailer tow height.

# Log Splitter - Hydraulic

28-TON

STANDARD
WORK-ZONE

## SPECIFICATIONS

- Tonnage: 28-Ton
- Wedge: 8" (20.3 cm) wedge
- Cycle time: 14 seconds
- Operation options: horizontal and vertical
- Log capacity: 24.5" (62.23 cm)
- Hydraulic capacity: 8 gallons (30.2 L)
- Tank capacity: 6.5 gallons (24.6 L)
- Pump performance: 2-stage, 16 GPM pump
- Weight: 610 lbs (276 kg)

## ENGINE OPTIONS

*All EPA approved*

**Kohler CH395**

277cc

| OREGON | Description |
|---|---|
| 596879 (shown) | 28-Ton Log Splitter (Kohler) |

# Features

## LOG SPLITTING FORCE

1. 4.5" (11.4 cm) cylinder, 28-tons of splitting force.
2. Auto-return valve speeds up the log splitting process.
3. Ergonomically positioned valve placement for increased operator comfort.
4. The 8" (20.3 cm) wedge adds splitting surface and is 4-way wedge compatible

## BUILT TO LAST

5. Stripper plates integrated for rigidity; capable of removing stuck logs; and cradling the log in place for hand-free splitting.
6. High-strength U.S. steel beam with interlocking toothplate designed for increased strength and durability
7. 8 gallons (30.2 L) hydraulic capacity.

## VERSATILE & PORTABLE

8. 4.80" x 12.0" (12.3 cm x 30.48 cm) 45 MPH tires DOT certified allow for easier maneuverability on the job site.
9. Horizontal shaft engine opposite side of operator.
10. Boxed tongue with rotating jack stand and handle gives solid support during splitting.

28-TON

NEW **EXtend Split™**

EXTENDED WORK-ZONE

**Splitting just got easier with our NEW EXtend Split™**

## SPECIFICATIONS

- Tonnage: 28-Ton
- Wedge: 8" (20.3 cm) wedge
- Cycle time: 14 seconds
- Operation options: horizontal and vertical
- Log capacity: 24.5" (62.23 cm)
- Hydraulic capacity: 8 gallons (30.2 L)
- Tank capacity: 6.5 gallons (24.6 L)
- Pump performance: 2-stage, 16 GPM pump
- Weight: 650 lbs (295 kg)

## ENGINE OPTIONS

*All EPA approved*

**Honda GX270**

270cc

**Kohler CH395**

277cc

| OREGON | Description |
|---|---|
| 596280 | 28-Ton Log Splitter (Honda) |
| 596279 (shown) | 28-Ton Log Splitter (Kohler) |

## EXTENDSPLIT™ WORK ZONE

- More space to work
- Improved access
- Exclusive to Oregon

# Features

## LOG SPLITTING FORCE

1. 4.5" (11.4 cm) cylinder, 28-tons of splitting force.
2. Auto-return valve speeds up the log splitting process.
3. Ergonomically positioned valve placement for increased operator comfort.
4. The 8" (20.3 cm) wedge adds splitting surface and is 4-way wedge compatible

## BUILT TO LAST

5. Stripper plates integrated for rigidity; capable of removing stuck logs; and cradling the log in place for hand-free splitting.
6. High-strength U.S. steel beam with interlocking toothplate designed for increased strength and durability.
7. 8 gallons (30.2 L) hydraulic capacity.

## VERSATILE & PORTABLE

8. 4.80" x 8.0" (12.3 cm x 20.30 cm) 45 MPH tires DOT certified.
9. Horizontal shaft engine opposite side of operator.
10. Boxed tongue with rotating utility jack and handle designed for strength during splitting.

# Log Splitter - Hydraulic

35-TON

## SPECIFICATIONS

- Tonnage: 35-Ton
- Wedge: 10" (25.4 cm) wedge
- Cycle time: 14 seconds
- Operation options: horizontal and vertical
- Log capacity: 24.5" (62.23 cm)
- Hydraulic capacity: 8 gallons (30.2 L)
- Tank capacity: 6.5 gallons (24.6 L)
- Pump performance: 2-stage, 16 GPM pump)
- Weight: 730 lbs (331 kg)

## ENGINE OPTIONS

*All EPA approved*

**Honda GX270**

270cc

**Kohler CH395**

277cc

| OREGON | Description |
|---|---|
| 596282 (shown) | 35-Ton Log Splitter (Honda) |
| 596281 | 35-Ton Log Splitter (Kohler) |

# Features

## LOG SPLITTING FORCE

1. Auto-return valve speeds up the log splitting process.
2. Ergonomically positioned valve placement for increased operator comfort.
3. 5"x 24" (10.2 X 61 cm) cylinder capable of producing 35 tons of splitting force, makes this our most popular tonnage for splitting most logs.
4. Large 10" (25.4 cm) wedge has larger splitting surface for splitting larger logs in a single pass and is 4-way wedge compatible.

## BUILT TO LAST

5. Integrated stripper plates and log cradle for rigidity; capable of removing stuck logs and holding logs secure for hands-free splitting.
6. High-strength U.S. steel beam with reinforced, integrated log cradle and interlocking footplate designed for increased strength and durability.
7. 2-stage 16 GPM pump for faster production.
8. 8 gallons (30.2 L) hydraulic capacity allows plenty of room for fluid to keep flowing and stay cool.

## VERSATILE & PORTABLE

9. 4.80" x 12.0" (12.3 cm x 30.48 cm) 45 MPH tires DOT certified. Optimized trailer tow height.
10. Horizontal shaft engine opposite side of operator.
11. Boxed tongue with rotating utility jack and handle designed for strength during splitting.

# Log Splitters - Kinetic

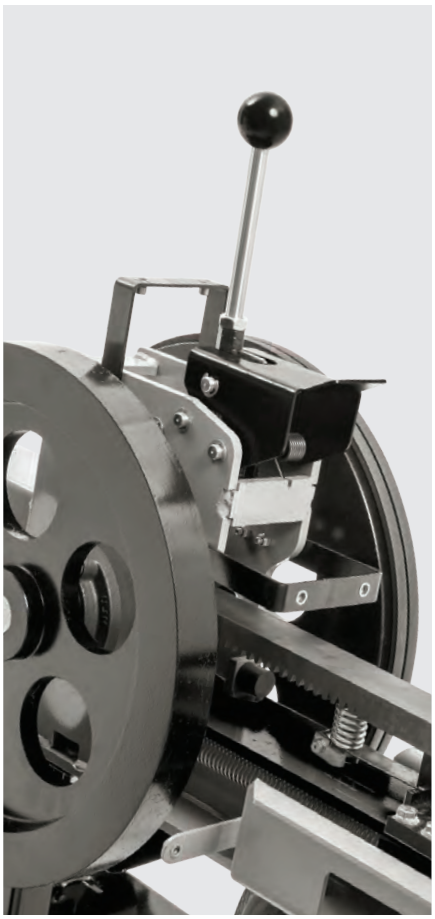

## SPLIT WOOD 6X FASTER* WITH KINETIC POWER

## Kinetic Advantages

**Save Time & Money**

Kinetic splitters consume less fuel than hydraulic splitters because the power requirements on the engine are less.

**Clean Operation**

No hydraulic fluid, cylinders, pumps, hoses, fittings, or filters eliminates hydraulic leaks and maintenance.

**Work Efficiently**

The precision wedge splits clean, creating less wood-waste debris.

## How It Works

Precision balanced, 70-pound flywheels spin at 325 PMs to create and store kinetic energy.

As the flywheels turn, the pinion gear spins on the same shaft. When the control handle moves forward, the rack presses onto the pinion gear.

The rack and push plate power forward at high speed, pushing the log through the wedge. This burst of energy adds high speed to the splitting action versus a much slower 20 to 40 ton hydraulic log splitter. As a result, most logs are split in 2 or 3 seconds instead of more than 13 seconds with a hydraulic splitter.

*Compared with hydraulic log splitters

KINETIC

## SPECIFICATIONS

- Kinetic log splitter
- Wedge: 6" (15.24 cm) wedge
- Cycle time: 2 seconds
- Operation options: horizontal
- Log capacity: 24" (61 cm)
- Weight: 640 lbs (290.3 kg)

## ENGINE OPTIONS

*All EPA approved*

**Kohler SH265**

196cc

| OREGON | Description |
|---|---|
| 581738 (shown) | Kinetic Log Splitter (Kohler) |

# Features

## WORK SMARTER WITH LESS FATIGUE

1. Virtually eliminates kick-back with patent-pending handle design with torsion springs that absorb energy when a stall occurs.
2. Reduced operator fatigue due to no unnecessary motion.
3. Work from either side of the log splitter with the convenient two-handed operation.

## HEAVY-DUTY WORK TABLE

4. Minimize snags when you bring a log back for re-splitting. The work surface is smooth and flush with the beam.
5. Split more logs with less debris. The log splitter's wide slots reduce build-up that could jam the push plate assembly.
6. The 32" wide work table allows easy access to rounds and re-splits from either side.

## VERSATILE & PORTABLE

7. Easily move the log splitter around your work site with the welded, table-mounted handles.
8. Tow it on the highway with the 2" ball coupler and safety chains, 45 MPH DOT certified tires.
9. Load and unload easily with the stow-away retractable tongue.

## BUILT FOR YEARS OF COMMERCIAL USE

10. Work efficiently. The precision wedge splits clean, creating less wood-waste debris in high-volume applications and can be sharpened to maintain edge in the future.
11. The heavy-duty stand centered under the table supports years of commercial use.
12. The precision, heat-treated, steel alloy rack and pinion gear system is proudly made in the USA.
13. The durable, high-strength steel drive system components are manufactured for heavy commercial use.

# Log Splitters - Accessories

## Log Splitter Catcher

Log catchers keep work at a consistent height, reducing strain and fatigue on the operator and to help keep the immediate work-space in order. Built of heavy-gauge steel, these attachments are designed to be durable and easily installed.

| OREGON | Description |
|---|---|
| S40200600 | Log Catcher Fits: |
| | 22-Ton<br>Use with Oregon S402022HO/HOEX or S402022KO/KOEX<br>22-Ton Log Splitters (serial numbers starting with A through H, ending in 6 or lower, or any unit with serial ending in: 3, 4, 5.) |
| | 28-Ton<br>Use with Oregon S402028HO/HOEX or S402028KO/KOEX<br>28-Ton Log Splitters (serial numbers 1G1110552 and smaller) |

| OREGON | Description |
|---|---|
| 564068 | Log Catcher Fits: |
| | 22-Ton<br>Use with Oregon S402022 Log Splitter (serial numbers starting with J, K, or L and ending in 6 or higher) |
| | 28-Ton<br>Use with Oregon S402028 Log Splitter (serial number 1G1110553 and larger) |

| OREGON | Description |
|---|---|
| 581194 | Log Catcher Fits: |
| | 28-Ton<br>Use with Oregon 596879 Log Splitter |
| | 28-Ton **ExtendSplit™**<br>Use with Oregon 596280 (Honda) or Oregon 596279 (Kohler) Log Splitters |
| | 35-Ton<br>Use with Oregon 596282 (Honda) or Oregon 596281 (Kohler) Log Splitters |

## 4-Way wedge

Log catchers keep work at a consistent height, reducing strain and fatigue on the operator and to help keep the immediate work-space in order. Built of heavy-gauge steel, these attachments are designed to be durable and easily installed.

| OREGON | Description |
|---|---|
| S40201200 | 4-Way Wedge Fits: |
| | 22-Ton<br>Use with Oregon S402022HO/HOEX or Oregon S402022KO/KOEX Log Splitters (serial numbers starting with A through H, ending in 6 or lower, or any unit with serial ending in: 3, 4, or 5) |
| | 28-Ton<br>Use with Oregon S402028HO/HOEX or Oregon S402028KO/KOEX Log Splitters (serial numbers 1G1110552 and smaller) |
| 564066 | 4-Way Wedge Fits: |
| | 28-Ton<br>Use with Oregon S402028HO/HOEX or Oregon S402028KO/KOEX Log Splitters (serial numbers 1G1110553 and larger) |

| OREGON | Description |
|---|---|
| 605808 | 4-Way Wedge Fits: |
| | 28-Ton<br>Use with Oregon 596879 or 596280 (Honda) or 596279 (Kohler) Log Splitters |
| | 28-Ton **ExtendSplit™**<br>Use with Oregon 596879 or 596280 (Honda) or 596279 (Kohler) Log Splitters |
| | 35-Ton<br>Use with Oregon 596282 (Honda) or 596281 (Kohler) Log Splitters |

| OREGON | Description |
|---|---|
| 592631 | 4-Way Wedge Fits: |
| | 22-Ton<br>Use with Oregon S402022 Log Splitter (serial numbers starting with J, K, or L and ending in 6 or higher) |

# Log Splitters - Accessories

OREGON®

# Forestry Parts

FOR

## Sections FOR

**Important Information on ANSI, Safety, and Selecting Forestry Products**
ANSI Standard & Oregon® Saw Chain Classification Chart . . . . . 2–4

**1 Guide Bar and Saw Chain Application Chart**
Quick Look Guide . . . . . 8–19
Product Families Introduction . . . . . 20
Guide Bar and Saw Chain Application Chart . . . . . 21–97
Ordering Oregon Saw Chain, Overview of Packaging Changes, Guide Bar and Saw Chain Combos . . . 98–101

**2 Saw Chain**
PowerCut™ 70-Series EXL . . . . . 104–105
SpeedCut™ System . . . . . 106–107
Features, Terminology, and Product Families . . . . . 108–113
Saw Chain for High-Performace Chainsaws: PowerCut™, SpeedCut™, VersaCut™, ControlCut™, DuraCut™, and RipCut™ . . . . . 114–131
Saw Chain for Carving: Sculptor™ . . . . . 132
Saw Chain for Reliable Performance: AdvanceCut™ . . . . . 134–135
Speciality Saw Chain: PowerSharp® . . . . . 136–137
Cross-Reference Chart, Sharpening, Grinding, and Replacement Parts . . . . . 138–143
Saw Chain Troubleshooting . . . . . 144–146
Saw Chain Drive Link Counts & Length in Feet . . . . . 147

**3 Guide Bars**
Professional and Occasional User Guide Bar Product Families . . . . . 150–151
How to Select, and Numbering System Overview . . . . . 152–153
Professional Light-Weight Guide Bars: SpeedCut, VersaCut, and ControlCut . . . . . 154–157
Professional Guide Bars: PowerCut and DuraCut . . . . . 158–161
Occasional User Guide Bars: AdvanceCut and Single Rivet . . . . . 162–165
Carving Guide Bars: Sculptor . . . . . 166
Nose Kits and Accessories . . . . . 167
Discontinued Guide Bars: ProLite® . . . . . 168–170
Chainsaw Mounts . . . . . 171–177
Guide Bar Troubleshooting . . . . . 178–179

**4 Sprockets**
Spur & Rim Sprockets . . . . . 182–186
Application by Chainsaw Model Chart . . . . . 187–203
Application by Oregon Part Number Chart . . . . . 204–208
Sprockets Troubleshooting . . . . . 209–210

**5 Chainsaw Parts**
Replacement Parts for Chainsaws . . . . . 214–228

# ANSI Information

## Customer Safety Information: Important

**To dealers: For customer safety, this is a must read.**
This insert covers provisions of the safety standard, "ANSI (American National Standards Institute) B175.1". It describes requirements that are designed to reduce the risk of injury due to kickback from s sold in the United States. Kickback is a rapid upward and backward motion of the chainsaw. It happens when the moving saw chain, near the upper part of the tip of the guide bar, contacts an object—for example, a log or a branch. The ANSI standard contains test methods. And these methods check the kickback potential for chainsaws and replacement saw chain.

To help you keep your customers safe, we have included an Oregon Saw Chain Classification Chart. It helps you choose the right replacement saw chains. And, it helps maintain compliance with the ANSI standard.

**Chainsaws and the ANSI standard**
The ANSI standard divides all gasoline powered chainsaws into two groups:

- Below 3.8 cubic inch displacement (62 cc)
- 3.8 cubic inch displacement (62 cc) and above

According to the ANSI standard, chainsaws below 3.8 cubic inch displacement (62 cc), have to meet low kickback performance requirements (paragraph 5.11.2.1). The manufacturer is required to mark these chainsaws. These chainsaws are required to be durably marked in a lasting manner to identify at least one replacement bar-and-chain combination that has been evaluated with that chainsaw power head and that will provide low kickback performance.

Chainsaws that have 3.8 cubic inch displacement (62 cc) and above, can follow ANSI low kickback provisions. But they are not required to do so. Chainsaws that don't meet the low kickback performance requirements need identification. Specifically, a warning, such as the following:

WARNING: This chainsaw is capable of severe kickback that could result in serious injury to the user. Do not operate this chainsaw unless you have extraordinary cutting needs and experience and specialized training for dealing with kickback. Chainsaws with significantly reduced kickback potential are available.

**Replacement saw chain and the ANSI standard**
When you replace the saw chain on chainsaws below 3.8 cubic inch displacement (62 cc), you have to use a low kickback chain of the proper pitch, gauge, and drive link count. That keeps the chainsaw in compliance with the low kickback provisions of the ANSI standard. Oregon provides replacement saw chain and we label it according to the ANSI standard. See the green highlighted chain types in the saw chain classification chart included. These are low kickback. The yellow highlighted chain types are not low kickback. These should be used only by people with experience and specialized training for dealing with kickback.

**Green label chain is low kickback chain**

The green label reads:

**ATTENTION: READ THIS**
**WARNING:** This saw chain met the kickback performance requirements of ANSI B175.1-2012 when tested according to the provisions of ANSI B175.1-2012. Low kickback saw chain meets the kickback performance requirements of CSA Standard Z62.3.

**Yellow label chain does not comply with the low kickback requirements of the standard**

The yellow label reads:

**ATTENTION: READ THIS**
**WARNING:** The saw chain in this package may be capable of kickback that could result in serious injury to the chainsaw operator or bystanders. Do not use this saw chain unless you have experience and specialized training for dealing with kickback. Saw chain with reduced kickback potential is available.

**Replacement guide bars and the ANSI standard**
The ANSI standard states:
Because of differences in replacement guide bars, the following guidelines shall be considered to determine kickback energy:

A. Sprocket nose guide bars with the same effective length, the same number of sprocket nose teeth, the same nose radius, and the same pitch may be considered to have the equivalent kickback energy.
B. A hard-nose guide bar having the same effective bar length, and the same or smaller nose radius as a sprocket-nose bar, may be considered to have equivalent or less kickback energy than the sprocket nose bar.
C. Kickback energy of all guide bars may be considered to be less for smaller nose radius sizes.

When replacing guide bars, in order to maintain approximately the same kickback energy of a chainsaw, the nose size (radius), or number of teeth in a sprocket nose bar, of the replacement bar should be equal to or smaller than the original equipment nose – with the same bar length.

## Oregon® Saw Chain Classification Chart

### Low kickback saw chain

Part numbers of Oregon saw chain that follow the ANSI low kickback standard (paragraph 5.11.2.4) are listed below. Packages of Oregon low kickback saw chain carry this authorized UL Classification Marking:

LOW KICKBACK SAW CHAIN IN ACCORDANCE WITH ANSI/OPEI B175.1-2012, PARAGRAPH 5.11.2.4 AND WITH CSA Z62.3
This saw chain met the kickback performance requirements of ANSI B175.1-2012 when tested according to the provisions of ANSI B175.1-2012. Low kickback saw chain meets the kickback performance requirements of CSA Standard Z62.3.

| Saw Chain Pitch | Part Numbers by Gauge .043" | .050" | .058" | .063" |
|---|---|---|---|---|
| 3/8 low profile™ | 90PX, 90SG | 91P, 91PS, 91PX, 91PXL | | |
| .325 | | 20BPX, M20BPX* | 21BPX, M21BPX* | 22BPX, M22BPX* |
| | | 95VPX | | |
| 3/8 | | 72V | 73V | 75V |

The above Saw Chain Classification Chart supersedes and replaces all previous Oregon Saw Chain Classification charts and posters.

### Professional use saw chain

Part numbers of Oregon chains that do not meet ANSI low kickback performance requirements are listed below. The chains below should be used only by those with experience and specialized training for dealing with kickback.

| Saw Chain Pitch | Part Numbers by Gauge .050" | .058" | .063" |
|---|---|---|---|
| 1/4 | 25AP, 25A, 25F | | |
| 3/8 low profile™ | 91VXL, M91VXL* | | |
| .325 | 20LPX, M20LPX*, 95TXL | 21LPX, M21LPX* | 22LPX, M22LPX* |
| 3/8 | 72APX, 72DPX, M72DPX*, 72LGX, 72JGX, 72EXL, 72EXJ, 72JPX, 72LPX, M72LPX* | 73DPX, M73DPX*, 73JGX, 73LGX, 73EXL, 73EXJ, 73LPX, M73LPX* | 75DPX, M75DPX*, 75JGX, 75LGX, 75EXL, 75EXJ, 75LPX, M75LPX* |
| | 72RD | 73RD | 75RD |
| | 72CJ, 72CK, 72CL, 72ECL, 72ECJ, 72ECK | | 75CJ, 75CK, 75CL, 75ECL, 75ECJ, 75ECK |
| .404 | | 58L | 27X, 27AX, 59J, 59L, 68LX, 68JX |
| | | | 27R, 27RA |
| | | | 68CL, 68CJ |

* DuraCut™ chain – see Saw Chain section for details

## Dealer Responsibilities

**Dealers, use extra caution if your customer wants:**
Cutting chain that does not meet the low kickback provisions of the ANSI standard, or any replacement guide bar with a nose radius larger than the original-equipment nose.

Oregon urges you — and all of our dealers — to advise these customers that this choice brings added risk of injury. Note also, that customers can buy the chains and bars that meet ANSI low kickback performance requirements. In accordance with ANSI, dealers should advise customers not to use yellow label chain if they do not have experience or specialized training for dealing with kickback.

**Oregon chain package labeling**
Boxes of Oregon chain are identified on the outside. We identify them using a green or a yellow label. Oregon preprints loop boxes and sheets of labels with the required ANSI kickback information. These preprinted loop boxes and labels are packed inside reel boxes of Oregon chain. Dealers must pack loops of chain into the loop box that has the corresponding green or yellow ANSI information. If you are not using a preprinted loop box, then apply the corresponding green or yellow label to either: the chain, the saw's guide bar or the invoice at the time of sale. Extra boxes and labels are available through your Oregon distributor.

**Dealer expertise**
You can help your customers stay safe and get the job done right. As you learn more, you'll know exactly which products are right for the job. Getting familiar with the chainsaw fit-up information in this catalog is a good first step.

The fit-up and application information in this catalog are based on data pulled from a variety of sources.
This guide can help you choose products that are right for your customer. But a note of caution — it is possible that some of the information provided contains errors. That's because it's not possible to account for variations in cutting conditions. Or, for how people might use these products from region to region. Dealers should confirm all data and information provided herein. Oregon disclaims all responsibility for any errors contained in this catalog. All dealers are urged to become as knowledgeable as possible about:

- Local conditions and customer needs
- Kickback, and how you can help limit your customers' exposure to injury
- Issues specific to Oregon products, including our end-use symbols, Intenz® guide bars and Guard Mate® bar-nose tip guards, as seen in these pages

# Important Information

## Choosing Oregon® Products – Important Information

### Guard Mate® Bar-nose tip guards

Some chainsaws include a bar-nose tip guard as original equipment (including Echo, Homelite and Ryobi models). Be aware that while some Oregon replacement bars and bar noses have holes for mounting a Guard Mate tip guard, most bars and bar noses do not.

**WARNING:** Some chainsaws come with bar-nose tip guards. Removing the bar-nose tip guard increases the risk of kickback. The operator, or bystanders, could be seriously hurt. If you replace the bar or the bar nose, make the right choice. Choose bars and bar noses with holes to mount a bar-nose tip guard. And follow the manufacturer's instructions.

### Selection and Installation of Oregon Intenz® Guide Bars

Intenz guide bars have our patented Intenz chain tensioning mechanism built right into the bar itself. You can read and follow the information about Intenz guide bars in this section.

#### Replacing the bar on saws equipped with an Intenz guide bar

Chainsaws originally equipped with an Intenz guide bar do not have a "bar adjustment mechanism" for tensioning the chain. Chainsaws which have been adapted to take an Intenz guide bar have had the bar adjustment mechanism removed. Since these saws have no bar adjustment pin, always replace an Intenz guide bar with another Intenz guide bar. That way, you maintain the saw's ability to properly tension the saw chain.

#### Replacing a standard bar with an Intenz guide bar

An Intenz bar can be fitted to any chainsaw with a compatible motor mount pattern. If the saw has a bar adjustment mechanism, the mechanism must be removed.

**WARNING: Do not use standard-type non-Intenz guide bars on chainsaws without a bar-adjustment mechanism.** Be sure to tension the chain correctly. A loose chain can jump off the bar and seriously injure the operator and bystanders. You cannot maintain chain tension on a non Intenz guide bar without the mechanical stop from the saw's bar-adjustment mechanism.

### Oregon Maintenance and Safety Manual

More information on the safe and effective use of Oregon saw chain, guide bars and sprockets is available in our Oregon Maintenance and Safety Manual. Oregon urges you, and all of our dealers to read and follow the instructions in this manual. We recommend that our dealers urge their customers to do the same.

Oregon Maintenance and Safety Manuals are printed in English, French, and Spanish and available from your authorized Oregon distributor, or by contacting Oregon directly.

Manual Part Numbers:

- **MMANUEL-EN** (English)
- **MMANUEL-SP** (Spanish)
- **MMANUEL-FR** (French)

Oregon | Blount, Inc.
4909 SE International Way
Portland, OR 97269

800-223-5168 | 503-653-8881
technicalservices@OregonProducts.com
www.OregonProducts.com

# GUIDE BAR & SAW CHAIN APPLICATION CHART


Quick Look Guide . . . . . FOR 8–18

Product Families Introduction . . . . . FOR 20

Guide Bar and Saw Chain Application Guide . . . . . FOR 21–97

Ordering Oregon Saw Chain . . . . . FOR 98

Packaging Upgrades Overview . . . . . FOR 99

Bar and Chain Combos . . . . . FOR 100–101

# Quick Look Application Guide for Popular Models



## Dolmar

### 340, 401, ES-161, ES-171, ES-173, PS-32, PS-34, PS-35, PS-45, PS-350, PS-351, PS-420, PS-421, PS-3410th

| Saw Chain | | Guide Bars | | |
|---|---|---|---|---|
| OEM Part No. | Oregon® Part No. | OEM Part No. | Oregon Part No. | Description |
| 3/8' Low Profile™ | | .050" | | |
| – | 91PX045 / 91PXL045 / 91VXL045 | – | 120SDEA041 | Single Rivet 12" |
| 511 492 052 | 91PX052 / 91PXL052 / 91VXL052 | 412 035 661 | 140SDEA041 | Single Rivet 14" |
| 511 492 056 | 91PX056 / 91PXL056 / 91VXL056 | 412 040 661 | 160SDEA041 | Single Rivet 16" |
| 3/8' Low Profile | | .050" | | |
| – | 91PX045 / 91PXL045 / 91VXL045 | – | *120SPEA041* | Pro-Lite® 12" |
| 511 492 052 | 91PX052 / 91PXL052 / 91VXL052 | – | *140SPEA041* | Pro-Lite 14" |
| 511 492 056 | 91PX056 / 91PXL056 / 91VXL056 | – | *160SPEA041* | Pro-Lite 16" |

### PS-460, PS-510, PS-540, PS-5100s, PS-5105, PS-5105 H, PS-6000i, PS-6100

| | | | | |
|---|---|---|---|---|
| .325" | | .058" | | |
| 523 086 064 | 21BPX064 / 21LPX064 | 415 038 631 | 158PXLBK095 | ControlCut™ 15" |
| 523 086 066 | 21BPX066 / 21LPX066 | 415 040 631 | 168PXLBK095 | ControlCut 16" |
| 523 086 072 | 21BPX072 / 21LPX072 | 415 045 631 | 188PXLBK095 | ControlCut 18" |

### 120, 120 Super, PS-460, PS-510, PS-540, PS-5100s, PS-5105, PS-5105 H, PS-6000i, PS-6100, PS-6800i

| | | | | |
|---|---|---|---|---|
| 3/8" | | .050" | | |
| 513 496 060 | 72EXL060 / *72LGX060* / 72LPX060 | 411 908 660 | 160VXLHK095 | VersaCut™ 16" |
| 513 496 064 | 72EXL064 / *72LGX064* / 72LPX064 | 411 909 660 | 180VXLHK095 | VersaCut 18" |
| 513 496 072 | 72EXL072 / *72LGX072* / 72LPX072 | 411 910 660 | 200VXLHK095 | VersaCut 20" |
| 3/8" | | .050" | | |
| 523 100 060 | 72EXL060 / *72LGX060* / 72LPX060 | 431 040 014 | 160RNDK095 | PowerCut™ 16" |
| 523 100 068 | 72EXL068 / *72LGX068* / 72LPX068 | 431 045 014 | 180RNDK095 | PowerCut 18" |
| 523 100 072 | 72EXL072 / *72LGX072* / 72LPX072 | 431 050 014 | 200RNDK095 | PowerCut 20" |
| 523 100 084 | 72EXL084 / *72LGX084* / 72LPX084 | 431 060 014 | 240RNDK095 | PowerCut 24" |

### PS-6400, PS-6400H, PS-6400W, PS-7300, PS-7300H, PS-7300W, PS-7310, PS-7310H, PS-7310W, PS-7900, PS-7910, PS-9010

| | | | | |
|---|---|---|---|---|
| 3/8" | | .050" | | |
| 523 100 060 | 72EXL060 / *72LGX060* / 72LPX060 | 431 040 013 | 160RNDD009 | PowerCut 16" |
| 523 100 068 | 72EXL068 / *72LGX068* / 72LPX068 | 431 045 013 | 180RNDD009 | PowerCut 18" |
| 523 100 072 | 72EXL072 / *72LGX072* / 72LPX072 | 431 050 013 | 200RNDD009 | PowerCut 20" |
| 523 100 084 | 72EXL084 / *72LGX084* / 72LPX084 | 431 060 013 | 240RNDD009 | PowerCut 24" |
| 523 100 092 | 72EXL092 / *72LGX092* / 72LPX092 | 431 070 013 | 280RNDD009 | PowerCut 28" |
| 523 100 105 | 72EXL010 / *72LGX010*5 / 72LPX105 | 431 080 013 | 320RNDD009 | PowerCut 32" |

Part numbers printed in *red italics* have been obsoleted. Contact your authorized Oregon distributor for availability.

## Echo

### CS-271T, CS-301, CS-305, CS-306

3/8' Low Profile™

.043"

| Saw Chain OEM Part No. | Saw Chain Oregon® Part No. | Guide Bars OEM Part No. | Guide Bars Oregon Part No. | Guide Bars Description |
|---|---|---|---|---|
| 90PX45CQ | 90PX045 | 12A4CD3745 | 124MLEA041 | Single Rivet 12" |
| 90PX52CQ | 90PX052 | 14A4CD3752 | 144MLEA041 | Single Rivet 14" |

### CS-271T, CS-301, CS-303T, CS-310, CS-330T, CS-341, CS-346, CS-352, CS-355T, CS-360T, CS-370, CS-370F, CS-400, CS-400F

3/8' Low Profile

.050"

| Saw Chain OEM Part No. | Saw Chain Oregon® Part No. | Guide Bars OEM Part No. | Guide Bars Oregon Part No. | Guide Bars Description |
|---|---|---|---|---|
| 91PX45CQ | 91PX045 / 91PXL045 / 91VXL045 | 12A0CD3745 | 120DGEA041 | Single Rivet 12" |
| 91PX52CQ | 91PX052 / 91PXL052 / 91VXL052 | 14A0CD3752 | 140DGEA041 | Single Rivet 14" |
| 91PX57CQ | 91PX057 / 91PXL057 / 91VXL057 | 16A0CD3757 | 160DGEA041 | Single Rivet 16" |
| 91PX62CQ | 91PX062 / 91PXL062 / 91VXL062 | 18A0CD3762 | 180DGEA041 | Single Rivet 18" |

### CS-450, CS-520

.325"

.050"

| Saw Chain OEM Part No. | Saw Chain Oregon® Part No. | Guide Bars OEM Part No. | Guide Bars Oregon Part No. | Guide Bars Description |
|---|---|---|---|---|
| 95VP66CQ | *95VPX066* / 95TXL066 | 16F0MD3366 | 160TXLGK216 | – |
| 95VP72CQ | *95VPX072* / 95TXL072 | 18F0MD3372 | 180TXLGK216 | – |
| 95VP78CQ | *95VPX078* / 95TXL078 | 20F0MD3378 | 200TXLGK216 | – |

### CS-440, CS-450, CS-510, CS-530

.325"

.050"

| Saw Chain OEM Part No. | Saw Chain Oregon® Part No. | Guide Bars OEM Part No. | Guide Bars Oregon Part No. | Guide Bars Description |
|---|---|---|---|---|
| 20BPX66CQ | 20BPX066 | 16F0AD3366 | 160VXLGK216 | VersaCut™ 16" |
| 20BPX72CQ | 20BPX072 | 18F0AD3372 | 180VXLGK216 | VersaCut 18" |
| 20BPX78CQ | 20BPX078 | 20F0AD3378 | 200VXLGK216 | VersaCut 20" |

### CS-450P, CS-500P, CS-550P

.325"

.050"

| Saw Chain OEM Part No. | Saw Chain Oregon® Part No. | Guide Bars OEM Part No. | Guide Bars Oregon Part No. | Guide Bars Description |
|---|---|---|---|---|
| 20LPX66CQ | 20LPX066 | 16F0LD3366 | 160VXLGK216 | VersaCut 16" |
| 20LPX72CQ | 20LPX072 | 18F0LD3372 | 180VXLGK216 | VersaCut 18" |
| 20LPX78CQ | 20LPX078 | 20F0LD3378 | 200VXLGK216 | VersaCut 20" |

### CS-600P, CS-620P, CS-620PW, CS-680

3/8"

.050"

| Saw Chain OEM Part No. | Saw Chain Oregon® Part No. | Guide Bars OEM Part No. | Guide Bars Oregon Part No. | Guide Bars Description |
|---|---|---|---|---|
| 72LPX60CQ | 72LPX060 / 72EXL060 / *72LGX060* | 16D0PS3860 | 160RNDD176 | PowerCut™ 16" |
| 72LPX66CQ | 72LPX066 / 72EXL066 / *72LGX066* | 18D0PS3866 | 180RNDD176 | PowerCut 18" |
| 72LPX70CQ | 72LPX070 / 72EXL070 / *72LGX070* | 20D0PS3870 | 200RNDD176 | PowerCut 20" |
| 72LPX81CQ | 72LPX081 / 72EXL081 / *72LGX081* | 24D0PS3881 | 240RNDD176 | PowerCut 24" |

Part numbers printed in *red italics* have been obsoleted. Contact your authorized Oregon distributor for availability.

# Quick Look Application Guide for Popular Models



| Saw Chain | | Guide Bars | | |
|---|---|---|---|---|
| OEM Part No. | Oregon® Part No. | OEM Part No. | Oregon Part No. | Description |

## Echo

### CS-590, CS-590 Timberwolf

| | | | | | |
|---|---|---|---|---|---|
| 3/8" | | .050" | | | |
| 72LPX64CQ | 72LPX064 / 72EXL064 / *72LGX064* | | 18D0AS3864 | 180VXLHD176 | VersaCut™ 18" |
| 72LPX70CQ | 72LPX070 / 72EXL070 / *72LGX070* | | 20D0AS3870 | 200VXLHD176 | VersaCut 20" |

### CS-8000

| | | | | | |
|---|---|---|---|---|---|
| 3/8" | | .050" | | | |
| 72LPX70CQ | 72LPX070 / 72EXL070 / *72LGX070* | | 20D0PS3870 | 200RNDD176 | PowerCut™ 20" |
| 72LPX81CQ | 72LPX081 / 72EXL081 / *72LGX081* | | 24D0PS3881 | 240RNDD176 | PowerCut 24" |

## Efco

### PT2500, PTX2500, PT2700, PTX2700, Multi Mate Pruner

| | | | | | |
|---|---|---|---|---|---|
| 3/8' Low Profile™ | | .043" | | | |
| 63090029R | 90PX039 | | 63090031 | 104MLEA318 | Single Rivet 10" |

### MT3500

| | | | | | |
|---|---|---|---|---|---|
| 3/8' Low Profile | | .050" | | | |
| 91P053X | 91PX053 / 91PXL053 / 91VXL053 | | EUSA50000 | 140SDEA041 | Single Rivet 14" |
| 91P057X | 91PX057 / 91PXL057 / 91VXL057 | | EUSA50001 | 160SDEA041 | Single Rivet 16" |

### MT3500SS

| | | | | | |
|---|---|---|---|---|---|
| 3/8' Low Profile | | .050" | | | |
| PS53 | PS53 | | EUSA50000 | 140SDEA041 | Single Rivet 14" |
| PS57 | PS57 | | EUSA50001 | 160SDEA041 | Single Rivet 16" |

### 132S, MT3600, MT3700, MT3750, MT4000, MT4100SP

| | | | | | |
|---|---|---|---|---|---|
| 3/8' Low Profile | | .050" | | | |
| 91P045X | 91PX045 / 91PXL045 / 91VXL045 | | EUSA50018 | 120SDEA041 | Single Rivet 12" |
| 91P052X | 91PX052 / 91PXL052 / 91VXL052 | | EUSA50000 | 140SDEA041 | Single Rivet 14" |
| 91P057X | 91PX057 / 91PXL057 / 91VXL057 | | EUSA50001 | 160SDEA041 | Single Rivet 16" |

### MT3750SS, MT4100SS

| | | | | | |
|---|---|---|---|---|---|
| 3/8' Low Profile | | .050" | | | |
| PS52 | PS52 | | EUSA50000 | 140SDEA041 | Single Rivet 14" |
| PS57 | PS57 | | EUSA50001 | 160SDEA041 | Single Rivet 16" |

## Efco

| Saw Chain | | Guide Bars | | |
|---|---|---|---|---|
| OEM Part No. | Oregon® Part No. | OEM Part No. | Oregon Part No. | Description |
| **MT4400** | | | | |
| .325" | | .050" | | |
| 95VPX066X | *95VPX066* / 95TXL066 | EUSA50070 | 160MLBK095 | AdvanceCut™ 16" |
| 95VPX072X | *95VPX072* / 95TXL072 | EUSA50071 | 180MLBK095 | AdvanceCut 18" |
| **147, 152, MT 5200** | | | | |
| .325" | | .050" | | |
| 20BPX066X | 20BPX066 | EUSA50022 | 160PXLBK095 | ControlCut™ 16" |
| 20BPX072X | 20BPX072 | EUSA50023 | 180PXLBK095 | ControlCut 18" |
| 20BPX078X | 20BPX078 | EUSA50020 | 200VXLGK095 | VersaCut™ 20" |
| .325" | | .058" | | |
| 21BPX066X | 21BPX066 | EUSA50002 | 168PXLBK095 | ControlCut 16" |
| 21BPX072X | 21BPX072 | EUSA50003 | 188PXLBK095 | ControlCut 18" |
| 21BPX078X | 21BPX078 | EUSA50021 | 208VXLGK095 | VersaCut 20" |
| **156, 165** | | | | |
| .325" | | .058" | | |
| 001000710R | 21BPX066 | 50012038 | 168RNBK095 | PowerCut™ 16" |
| 001000711R | 21BPX072 | 50012039 | 188RNBK095 | PowerCut 18" |
| 001000712R | 21BPX078 | 50012040 | 208RNBK095 | PowerCut 20" |
| 3/8" | | .050" | | |
| 72LPX060X | 72LPX060 / 72EXL060 / *72LGX060* | EUSA50004 | 160RNDK095 | PowerCut 16" |
| 72LPX068X | 72LPX068 / 72EXL068 / *72LGX068* | EUSA50006 | 180RNDK095 | PowerCut 18" |
| 72LPX072X | 72LPX072 / 72EXL072 / *72LGX072* | EUSA50008 | 200RNDK095 | PowerCut 20" |
| 72LPX084X | 72LPX084 / 72EXL084 / *72LGX084* | EUSA50012 | 240RNDK095 | PowerCut 24" |
| 3/8" | | .058" | | |
| 73LPX060X | 73LPX060 / 73LGX060 | EUSA50005 | 168RNDK095 | PowerCut 16" |
| 73LPX068X | 73LPX068 / 73LGX068 | EUSA50007 | 188RNDK095 | PowerCut 18" |
| 73LPX072X | 73LPX072 / 73LGX072 | EUSA50008 | 208RNDK095 | PowerCut 20" |
| 73LPX084X | 73LPX084 / 73LGX084 | EUSA50013 | 248RNDK095 | PowerCut 24" |

Part numbers printed in *red italics* have been obsoleted. Contact your authorized Oregon distributor for availability.

# Quick Look Application Guide for Popular Models



| Saw Chain | | Guide Bars | | |
|---|---|---|---|---|
| OEM Part No. | Oregon® Part No. | OEM Part No. | Oregon Part No. | Description |

## Efco

### MT 6500

3/8"

.050"


| | | | | |
|---|---|---|---|---|
| 72LPX060X | 72LPX060 / 72EXL060 / *72LGX060* | EUSA50103 | 160RNDD009 | PowerCut™ 16" |
| 72LPX068X | 72LPX068 / 72EXL068 / *72LGX068* | EUSA50104 | 180RNDD009 | PowerCut 18" |
| 72LPX072X | 72LPX072 / 72EXL072 / *72LGX072* | EUSA50010 | 200RNDD009 | PowerCut 20" |
| 72LPX084X | 72LPX084 / 72EXL084 / *72LGX084* | EUSA50014 | 240RNDD009 | PowerCut 24" |

### 181, MT7200, MT8200

3/8"

.050"


| | | | | |
|---|---|---|---|---|
| 72LPX072X | 72LPX072 / 72EXL072 / *72LGX072* | EUSA50010 | 200RNDD009 | PowerCut 20" |
| 72LPX084X | 72LPX084 / 72EXL084 / *72LGX084* | EUSA50014 | 240RNDD009 | PowerCut 24" |
| 72LPX092X | 72LPX092 / 72EXL092 / *72LGX092* | EUSA50016 | 280RNDD009 | PowerCut 28" |

### 181, MT7200, MT8200

3/8"

.058"


| | | | | |
|---|---|---|---|---|
| 73LPX072X | 73LPX072 / 73LGX072 | EUSA50011 | 208RNDD009 | PowerCut 20" |
| 73LPX084X | 73LPX084 / 73LGX084 | EUSA50015 | 248RNDD009 | PowerCut 24" |
| 73LPX093X | 73LPX093 / 73LGX093 | EUSA50017 | 288RNDD009 | PowerCut 28" |

## Husqvarna

### 135, 135E, 140, 140E, 317E, 321E, 334T, 338XPT, T435, T540XP

3/8' Low Profile™

.050"


| | | | | |
|---|---|---|---|---|
| 501 84 21-45 | 91PX045 / 91PXL045 / 91VXL045 | 501 95 92-45 | 120SDEA095 | Single Rivet 12" |
| 501 84 21-52 | 91PX052 / 91PXL052 / 91VXL052 | 501 95 92-52 | 140SDEA095 | Single Rivet 14" |
| 501 84 21-56 | 91PX056 / 91PXL056 / 91VXL056 | 501 95 92-56 | 160SDEA095 | Single Rivet 16" |

### 135, 135E, 140, 140E, 317E, 321E, 334T, 338XPT, T435, T540XP

3/8' Low Profile

.050"


| | | | | |
|---|---|---|---|---|
| 501 84 21-45 | 91PX045 / 91PXL045 / 91VXL045 | 576 83 07-45 | 120SXEA095 | AdvanceCut™ 12" |
| 501 84 21-52 | 91PX052 / 91PXL052 / 91VXL052 | 576 83 07-52 | 140SXEA095 | AdvanceCut 14" |
| 501 84 21-56 | 91PX056 / 91PXL056 / 91VXL056 | 576 83 07-56 | 160SXEA095 | AdvanceCut 16" |

## Husqvarna

### 339XP, 346XP, 353, 357XP, 359, 435, 435E, 440E, 450, 450E

| Saw Chain | | Guide Bars | | |
|---|---|---|---|---|
| OEM Part No. | Oregon® Part No. | OEM Part No. | Oregon Part No. | Description |
| .325" | | .050" | | |
| 501 84 06-56 | *95VPX056* / 95TXL056 | 508 92 61-56 | 130MLBK095 | AdvanceCut™ 13" |
| 501 84 06-64 | *95VPX064* / 95TXL064 | 508 92 61-64 | 150MLBK095 | AdvanceCut 15" |
| 501 84 06-66 | *95VPX066* / 95TXL066 | 508 92 61-66 | 160MLBK095 | AdvanceCut 16" |
| 501 84 06-72 | *95VPX072* / 95TXL072 | 508 92 61-72 | 180MLBK095 | AdvanceCut 18" |
| 501 84 06-80 | *95VPX080* / 95TXL080 | 508 92 61-80 | – | – |
| .325" | | .058" | | |
| 501 84 04-56 | 21BPX056 / 21LPX056 | 508 92 21-56 | 138PXBK095 | AdvanceCut 13" |
| 501 84 04-64 | 21BPX064 / 21LPX064 | 508 91 21-64 | 158PXBK095 | AdvanceCut 15" |
| 501 84 04-66 | 21BPX066 / 21LPX066 | 508 92 21-66 | 168PXBK095 | AdvanceCut 16" |
| 501 84 04-72 | 21BPX072 / 21LPX072 | 508 92 21-72 | 188PXBK095 | AdvanceCut 18" |
| – | 21BPX078 / 21LPX078 | 608 00 00-01 | *208SLGK095* | Pro-Lite® 20" |

### 55, 455E, 455 Rancher, 545, 550XP, 555

| | | | | |
|---|---|---|---|---|
| 3/8" | | .058" | | |
| 501 84 14-56 | 73LPX056 / 73LGX056 | 508 91 41-56 | 158VXLHK095 | VersaCut™ 15" |
| 501 84 14-60 | 73LPX060 / 73LGX060 | 508 91 41-60 | 168VXLHK095 | VersaCut 16" |
| 501 84 14-68 | 73LPX068 / 73LGX068 | 508 91 41-68 | 188VXLHK095 | VersaCut 18" |
| 501 84 14-72 | 73LPX072 / 73LGX072 | 510 15 35-72 | 208VXLHK095 | VersaCut 20" |

### 365, 372XP, 385XP, 390XP, 395XP, 576XP

| | | | | |
|---|---|---|---|---|
| 3/8" | | .058" | | |
| 501 84 14-56 | 73LPX056 / 73LGX056 | 508 91 31-56 | 158VXLHD009 | VersaCut 15" |
| 501 84 14-60 | 73LPX060 / 73LGX060 | 508 91 31-60 | 168VXLHD009 | VersaCut 16" |
| 501 84 14-68 | 73LPX068 / 73LGX068 | 508 91 31-68 | 188VXLHD009 | VersaCut 18" |
| 501 84 14-72 | 73LPX072 / 73LGX072 | 508 91 31-72 | 208VXLHD009 | VersaCut 20" |

### 365, 372XP, 385XP, 390XP, 395XP, 562XP, 576XP, 3120XP

| | | | | |
|---|---|---|---|---|
| 3/8" | | .058" | | |
| 501 84 14-60 | 73LPX060 / 73LGX060 | 608 00 00-43 | 168RNDD009 | PowerCut™ 16" |
| 501 84 14-68 | 73LPX068 / 73LGX068 | 501 95 69-68 | 188RNDD009 | PowerCut 18" |
| 501 84 14-72 | 73LPX072 / 73LGX072 | 501 95 69-72 | 208RNDD009 | PowerCut 20" |
| 501 84 14-84 | 73LPX084 / 73LGX084 | 501 95 69-84 | 248RNDD009 | PowerCut 24" |
| 501 84 14-92 | 73LPX092 / 73LGX092 | 501 95 69-92 | 288RNDD009 | PowerCut 28" |

Part numbers printed in *red italics* have been obsoleted. Contact your authorized Oregon distributor for availability.

# Quick Look Application Guide for Popular Models



| Saw Chain | | Guide Bars | | |
|---|---|---|---|---|
| OEM Part No. | Oregon® Part No. | OEM Part No. | Oregon Part No. | Description |

## Jonsered

### CS 2139T

| | | | | |
|---|---|---|---|---|
| 3/8' Low Profile™ | | .050" | | |
| 501 84 69-45 | 91PX045 / 91PXL045 / 91VXL045 | 544 07 12-45 | 120SDEA095 | Single Rivet 12" |
| 501 84 69-52 | 91PX052 / 91PXL052 / 91VXL052 | 544 07 12-52 | 140SDEA095 | Single Rivet 14" |
| 501 84 69-56 | 91PX056 / 91PXL056 / 91VXL056 | 580 47 61-56 | 160SDEA095 | Single Rivet 16" |

### CS2138, CS2140, CS2141, CS2238, CS2238 S, CS2240, CS2240 S

| | | | | |
|---|---|---|---|---|
| 3/8' Low Profile | | .050" | | |
| 501 84 69-45 | 91PX045 / 91PXL045 / 91VXL045 | – | 120SDEA041 | Single Rivet 12" |
| 501 84 69-52 | 91PX052 / 91PXL052 / 91VXL052 | 501 92 69-52 | 140SDEA041 | Single Rivet 14" |
| 501 84 69-56 | 91PX056 / 91PXL056 / 91VXL056 | 501 85 53-56 | 160SDEA041 | Single Rivet 16" |
| .325" | | .050" | | |
| 501 84 06-56 | *95VPX056* / 95TXL056 | 508 92 63-56 | 130MLBK041 | AdvanceCut™ 13" |
| 501 84 06-64 | *95VPX064* / 95TXL064 | 508 92 63-64 | 150MLBK041 | AdvanceCut 15" |
| 501 84 06-66 | *95VPX066* / 95TXL066 | 508 92 63-66 | 160MLBK041 | AdvanceCut 16" |
| 501 84 06-72 | *95VPX072* / 95TXL072 | 508 92 63-72 | 180MLBK041 | AdvanceCut 18" |

### CS2149, CS2145, CS2150, CS2240, CS2245, CS2250, CS2250 S, CS2252, CS2253

| | | | | |
|---|---|---|---|---|
| .325" | | .050" | | |
| 501 84 06-56 | *95VPX056* / 95TXL056 | 508 92 63-56 | 130MLBK095 | AdvanceCut 13" |
| 501 84 06-64 | *95VPX064* / 95TXL064 | 508 92 63-64 | 150MLBK095 | AdvanceCut 15" |
| 501 84 06-66 | *95VPX066* / 95TXL066 | 508 92 63-66 | 160MLBK095 | AdvanceCut 16" |
| 501 84 06-72 | *95VPX072* / 95TXL072 | 508 92 63-72 | 180MLBK095 | AdvanceCut 18" |
| 501 84 06-80 | *95VPX080* / 95TXL080 | 508 92 63-80 | – | – |
| .325" | | .050" | | |
| 501 84 06-56 | *95VPX056* / 95TXL056 | 508 92 63-56 | *130MPBK095* | Pro-Lite® 13" |
| 501 84 06-64 | *95VPX064* / 95TXL064 | 508 92 63-64 | *150MPBK095* | Pro-Lite 15" |
| 501 84 06-66 | *95VPX066* / 95TXL066 | 508 92 63-66 | *160MPBK095* | Pro-Lite 16" |
| 501 84 06-72 | *95VPX072* / 95TXL072 | 508 92 63-72 | *180MPBK095* | Pro-Lite 18" |
| 501 84 06-78 | *95VPX078* / 95TXL078 | – | – | 20" |
| 501 84 06-80 | *95VPX080* / 95TXL080 | 508 92 63-80 | – | 20" |

Part numbers printed in *red italics* have been obsoleted. Contact your authorized Oregon distributor for availability.

## Jonsered

### CS2149, CS2149 TURBO, CS2150, CS2152, CS2153, CS2250, CS2250 S, CS2252, CS2253

| Saw Chain | | Guide Bars | | |
|---|---|---|---|---|
| .325" | | .058" | | |
| OEM Part No. | Oregon® Part No. | OEM Part No. | Oregon Part No. | Description |
| 501 84 04-56 | 21BPX056 / 21LPX056 | 508 91 23-56 | 138PXLBK095 | ControlCut™ 13" |
| 501 84 04-64 | 21BPX064 / 21LPX064 | 508 91 23-64 | 158PXLBK095 | ControlCut 15" |
| 531 30 87-47 | 21BPX066 / 21LPX066 | 508 91 23-66 | 168PXLBK095 | ControlCut 16" |
| 501 84 04-72 | 21BPX072 / 21LPX072 | 508 91 23-72 | 188PXLBK095 | ControlCut 18" |
| 501 84 29-78 | 21BPX078 / 21LPX078 | – | 208VXLGK095 | ControlCut 20" |

### CS2156, CS2159, CS2163, CS2255, CS2258, CS2260

| | | | | |
|---|---|---|---|---|
| 3/8" | | .058" | | |
| 501 84 14-60 | 73LPX060 / 73LGX060 | 508 91 43-60 | 168VXLHK095 | VersaCut™ 16" |
| 501 84 14-68 | 73LPX068 / 73LGX068 | 508 91 43-68 | 188VXLHZ095 | VersaCut 18" |
| 501 84 14-72 | 73LPX072 / 73LGX072 | 508 91 43-72 | 208VXLHK095 | VersaCut 20" |
| 501 84 14-84 | 73LPX084 / 73LGX084 | – | – | 24" |

### CS2165, CS2166, CC2171, CS2172, CS2172 W, CS2186, CS2188

| | | | | |
|---|---|---|---|---|
| 3/8" | | .058" | | |
| 501 84 25-60 | 73LPX060 / 73LGX060 | 501 91 33-60 | 168VXLHD009 | VersaCut 16" |
| 501 84 25-68 | 73LPX068 / 73LGX068 | 501 91 33-68 | 188VXLHD009 | VersaCut 18" |
| 501 84 25-72 | 73LPX072 / 73LGX072 | 501 91 33-72 | 208VXLHD009 | VersaCut 20" |
| – | – | – | 248VXLHD009 | VersaCut 24" |

| | | | | |
|---|---|---|---|---|
| 3/8" | | .058" | | |
| 501 84 14-60 | 73LPX060 / 73LGX060 | 501 95 70-60 | 168RNDD009 | PowerCut™ 16" |
| 501 84 14-68 | 73LPX068 / 73LGX068 | 501 95 70-68 | 188RNDD009 | PowerCut 18" |
| 501 84 14-72 | 73LPX072 / 73LGX072 | 501 95 70-72 | 208RNDD009 | PowerCut 20" |
| 501 84 14-84 | 73LPX084 / 73LGX084 | 501 95 70-84 | 248RNDD009 | PowerCut 24" |
| 501 84 14-92 | 73LPX092 / 73LGX092 | 501 95 70-92 | 288RNDD009 | PowerCut 28" |

# Quick Look Application Guide for Popular Models



## Redmax

### PSZ2401, PSZ 2450S, PSZ2460S (Pole Pruners)

| Saw Chain | | Guide Bars | | |
|---|---|---|---|---|
| OEM Part No. | Oregon® Part No. | OEM Part No. | Oregon Part No. | Description |
| 3/8' Low Profile™ | | .043" | | |
| 547 10 26-01 | 90PX044 | 574 14 55-01 | 124MLEA218 | Single Rivet 12" |

### GZ380, GZ400, GZ3500T, GZ3800, GZ4000

| Saw Chain | | Guide Bars | | |
|---|---|---|---|---|
| 3/8' Low Profile | | .050" | | |
| 547 10 27-01 | 91PX045 / 91PXL045 / 91VXL045 | 574 13 52-01 | 120SDEA041 | Single Rivet 12" |
| 574 10 28-01 | 91PX053 / 91PXL053 / 91VXL053 | 574 13 53-01 | 140SDEA041 | Single Rivet 14" |
| 574 10 30-01 | 91PX057 / 91PXL057 / 91VXL057 | 574 13 61-01 | 160SDEA041 | Single Rivet 16" |
| 574 10 31-01 | 91PX062 / 91PXL062 / 91VXL062 | 574 13 63-01 | 180SDEA041 | Single Rivet 18" |

### GZ380, GZ400, GZ3500T, GZ3800, GZ4000

| Saw Chain | | Guide Bars | | |
|---|---|---|---|---|
| 3/8' Low Profile | | .050" | | |
| 547 10 27-01 | 91PX045 / 91PXL045 / 91VXL045 | – | *120SPEA041* | Pro-Lite® 12" |
| 574 10 28-01 | 91PX053 / 91PXL053 / 91VXL053 | – | *140SPEA041* | Pro-Lite 14" |
| 574 10 30-01 | 91PX057 / 91PXL057 / 91VXL057 | – | *160SPEA041* | Pro-Lite 16" |

### GZ4500

| Saw Chain | | Guide Bars | | |
|---|---|---|---|---|
| .325" | | .050" | | |
| 574 10 32-01 | *95VPX066* / 95TXL066 | 574 13 65-01 | 160MLBK095 | AdvanceCut™ 16" |
| 574 10 31-01 | *95VPX072* / 95TXL072 | 574 13 63-01 | 180MLBK095 | AdvanceCut 18" |

### G 5000, G 5000 AVS, G 5300

| Saw Chain | | Guide Bars | | |
|---|---|---|---|---|
| 3/8" | | .050" | | |
| 574 09 41-01 | 20BPX066 / 20LPX066 | 574 28 49-01 | 160VXLGK095 | VersaCut™ 16" |
| 576 12 70-01 | 20BPX072 / 20LPX072 | 574 10 70-01 | 180VXLGK095 | VersaCut 18" |
| 576 12 71-01 | 20BPX078 / 20LPX078 | 574 13 71-01 | 200VXLGK095 | VersaCut 20" |

### GZ 7000

| Saw Chain | | Guide Bars | | |
|---|---|---|---|---|
| 3/8" | | .050" | | |
| – | 72EXL060 / *72LGX060* / 72LPX060 | – | 160RNDD009 | PowerCut™ 16" |
| – | 72EXL068 / *72LGX068* / 72LPX068 | – | 180RNDD009 | PowerCut 18" |
| 574 09 93-01 | 72EXL072 / *72LGX072* / 72LPX072 | 574 13 87-01 | 200RNDD009 | PowerCut 20" |
| 574 09 94-01 | 72EXL084 / *72LGX084* / 72LPX084 | 574 13 88-01 | 240RNDD009 | PowerCut 24" |
| 574 09 95-01 | 72EXL093 / *72LGX093* / 72LPX093 | 574 13 89-01 | 280RNDD009 | PowerCut 28" |

Part numbers printed in *red italics* have been obsoleted. Contact your authorized Oregon distributor for availability.

## Stihl

| Saw Chain | | Guide Bars | | |
|---|---|---|---|---|
| OEM Part No. | Oregon® Part No. | OEM Part No. | Oregon Part No. | Description |
| **MS170, MS171, MS180C-B, MS180C-BE, MS181, MS192C-E, MS192T C-E** | | | | |
| 3/8' Low Profile™ | | .043" | | |
| 61PMM3 44 | 90PX044 | 3005 000 3905 | 124MLEA074 | Single Rivet 12" |
| 61PMM3 50 | 90PX050 | 3005 000 3909 | 144MLEA074 | Single Rivet 14" |
| 61PMM3 55 | 90PX055 | 3005 008 3913 | 164MLEA074 | Single Rivet 16" |
| **MS192C-E, MS192TC-E, MS200, MS200T, MS201T, MS201C-E, MS230, MS230C-BE, MS250, MS250C-BE** | | | | |
| 3/8' Low Profile | | .050" | | |
| 63PM3 44 | 91PX044 / 91PXL044 / 91VXL044 | 3005 000 4805 | 120SDEA074 | Single Rivet 12" |
| 63PM3 50 | 91PX050 / 91PXL050 / 91VXL050 | 3005 000 4809 | 140SDEA074 | Single Rivet 14" |
| 63PM3 55 | 91PX055 / 91PXL055 / 91VXL055 | 3005 000 4813 | 160SDEA074 | Single Rivet 16" |
| **MS230, MS230C-BE, MS231, MS250, MS250C-BE, MS251, MS251C-BE** | | | | |
| .325" | | .050" | | |
| 23RM3 62 | 95TXL062 | 3005 000 7013 | 160TXLBA074 | SpeedCut™ 16" |
| 23RM3 68 | 95TXL068 | 3005 008 7017 | 180TXLBA074 | SpeedCut 18" |
| .325" | | .050" | | |
| 23RM3 62 | 20BPX062 / 20LPX062 | 3005 000 7013 | 160PXLBA074 | ControlCut™ 16" |
| 23RM3 68 | 20BPX068 / 20LPX068 | 3005 008 7017 | 180PXLBA074 | ControlCut 18" |
| .325" | | .063" | | |
| 26RM3 62 | 22BPX062 / 22LPX062 | 3005 000 4713 | 163PXLBA074 | ControlCut 16" |
| 26RM3 68 | 22BPX068 / 22LPX068 | 3005 008 4717 | 183PXLBA074 | ControlCut 18" |
| **Farm Boss, MS260 Pro, MS261, MS270, MS290, MS291, MS310, MS311, Wood Boss** | | | | |
| .325" | | .050" | | |
| 23RM3 67 | 20BPX067 / 20LPX067 | 3003 008 6613 | 160VXLGD025 | VersaCut™ 16" |
| 23RM3 74 | 20BPX074 / 20LPX074 | 3003 008 6617 | 180VXLGD025 | VersaCut 18" |
| 23RM3 81 | 20BPX081 / 20LPX081 | 3003 008 6621 | – | VersaCut 20" |
| .325" | | .063" | | |
| 26RM3 67 | 22BPX067 / 22LPX067 | 3003 008 6813 | 163VXLGD025 | VersaCut 16" |
| 26RM3 74 | 22BPX074 / 22LPX074 | 3003 008 6817 | 183VXLGD025 | VersaCut 18" |
| 26RM3 81 | 22BPX081 / 22LPX081 | 3003 008 6821 | 203VXLGD025 | VersaCut 20" |

# Quick Look Application Guide for Popular Models



## Stihl

### Farm Boss, MS260 Pro, MS290, MS291, MS310, MS311, MS361, MS362, MS390, MS391, MSE220

| Saw Chain | | Guide Bars | | |
|---|---|---|---|---|
| OEM Part No. | Oregon® Part No. | OEM Part No. | Oregon Part No. | Description |
| 3/8" | | | | |
| 33RS3 60 | 72EXL060 / *72LGX060* / 72LPX060 | 3003 008 8913 | 160VXLHD025 | VersaCut™ 16" |
| 33RS3 66 | 72EXL066 / *72LGX066* / 72LPX066 | 3003 008 8917 | 180VXLHD025 | VersaCut 18" |
| 33RS3 72 | 72EXL072 / *72LGX072* / 72LPX072 | 3003 00808921 | 200VXLHD025 | VersaCut 20" |
| – | – | – | 240VXLHD025 | VersaCut 24" |

### MS440, MS441C-M, MS441C-Q, MS460, MS650, MS660

| | | | | |
|---|---|---|---|---|
| 3/8" | | .050" | | |
| 33RS3 60 | 72EXL060 / *72LGX060* / 72LPX060 | 3003 000 8813 | 160RNDD025 | PowerCut™ 16" |
| 33RS3 66 | 72EXL066 / *72LGX066* / 72LPX066 | 3003 000 8817 | 180RNDD025 | PowerCut 18" |
| 33RS3 72 | 72EXL072 / *72LGX072* / 72LPX072 | 3003 000 8822 | 200RNDD025 | PowerCut 20" |
| 33RS3 84 | 72EXL084 / *72LGX084* / 72LPX084 | 3003 000 8830 | 240RNDD025 | PowerCut 24" |
| 3/8" | | .063" | | |
| 36RS3 60 | 75LGX060 / 75LPX060 | 3003 000 9413 | 163RNDD025 | PowerCut 16" |
| 36RS3 66 | 75LGX066 / 75LPX066 | 3003 000 9417 | 183RNDD025 | PowerCut 18" |
| 36RS3 72 | 75LGX072 / 75LPX072 | 3003 000 9421 | 203RNDD025 | PowerCut 20" |
| 36RS3 84 | 75LGX084 / 75LPX084 | 3003 000 9831 | 243RNDD025 | PowerCut 24" |
| 36RS3 92 | 75LGX092 / 75LPX092 | 3003 000 6038 | 283RNDD025 | PowerCut 28" |
| 36RS3 105 | 75LGX105 / 75LPX105 | 3003 000 6046 | 323RNDD025 | PowerCut 32" |
| 36RS3 115 | 75LGX115 / 75LPX115 | 3003 000 6053 | 363RNDD025 | PowerCut 36" |

# PRODUCT FAMILIES

*Oregon® understands that the needs of woodcutters – professionals and novices – are as diverse as the terrains and environments in which they work.*

*We have organized our saw chains into product families with key characteristics that different users will value. These product families will help ensure that you choose the right chain based on your everyday needs — helping to make understanding the differences between our chains effortless.*

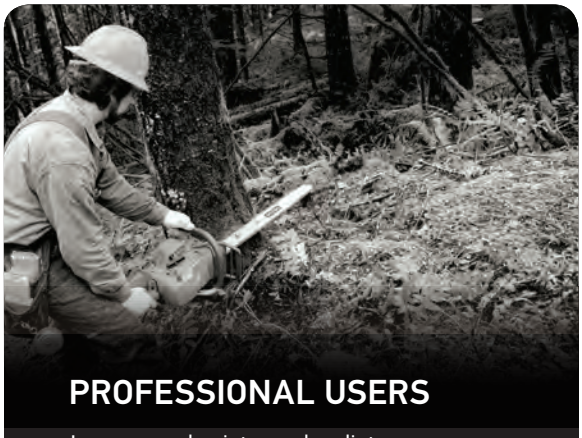

## PROFESSIONAL USERS

Loggers, arborists, orchardists, millwrights, forestry workers, and other highly skilled woodcutters require products designed for the demands of their tough professions. Oregon makes products that are strong and durable, with state-of-the-art features that promote a long lifespan and make the products easier to use.

Oregon has developed product families designed for all professional woodcutters. They range from bars and chain that provide more control in the cut to precision cutting systems for the most experienced users. We also make specialty products for the toughest conditions and ripping chain used in saw mills.

**PowerCut™**
**SpeedCut™**
**VersaCut™**
**ControlCut™**
**DuraCut™**
**RipCut™**

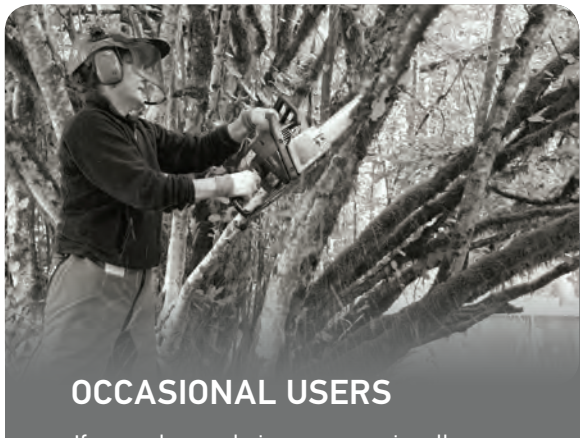

## OCCASIONAL USERS

If you only use chainsaws occasionally, Oregon makes several products to meet your needs.

Oregon's occasional user products are perfect for trimming trees, cutting firewood, and maintaining your property.

These bars and chain are easy to use and easy to maintain, featuring technology that reduces kickback.

**AdvanceCut™**
**PowerSharp®**
**Single Rivet** (guide bars only)

**Detailed information about each product family can be found on these pages:**

Saw Chain → FOR 102–147
Guide Bars → FOR 148–179

# Guide Bar & Saw Chain Applications Overview



A

**Saw Chain** | **Guide Bars**

| Pitch | Gauge | Chain Type | Drive Links | Bar Length | Drive Teeth | DuraCut™ AT | PowerCut™ RN RW GN PM | SpeedCut™ TXL | VersaCut™ VXL | ControlCut™ PXL | AdvanceCut™ SF SX PX GD MLB | Single Rivet SD DG MLE |
|---|---|---|---|---|---|---|---|---|---|---|---|---|
| | | | | | | Armor Tip | PowerMatch® | Pro-Lite® MG MP | Pro-Lite® SLG SLH GL GP SP | Pro-Lite® SLB | Pro-Am® | DoubleGuard® |

## Husqvarna B

**316 Electric, 334T, 335, 335XPT, T435, T540** — D — PowerSharp® Compatible I

| Pitch | Gauge | Chain Type | | Drive Links | Bar Length | Drive Teeth | F | | | | | |
|---|---|---|---|---|---|---|---|---|---|---|---|---|
| | .050 | **ControlCut** 91PXL **AdvanceCut** 91PX | **VersaCut** 91VXL | 045 | 12 | 6 | | | | *120SPEA095* | 120SXEA095 | 120SDEA095 |
| | | | | 052 | 14 | 6 | | | | *140SPEA095* | 140SXEA095 | 140SDEA095 |
| | | | | 056 | 16 | 6 | | | | *160SPEA095* | 160SXEA095 | 160SDEA095 |
| E | Intenz® ** G | | | | | | | | | | | |
| 3/8 low profile | .050 | **ControlCut** 91PXL **AdvanceCut** 91PX | **VersaCut** 91VXL | 045 | 12 | 6 | | | | | | *120SDET095* |
| | | | | 052 | 14 | 6 | | | | *140SPET095* | | 140SDET095 |
| | | | | 056 | 16 | 6 | | | | | | *160SDET095* |
| | Narrow Kerf | | | | | | | | | | | |
| | .043 | **AdvanceCut** 90PX | | 052 | | 6 | | | | | | *144MLEA095* |

## Husqvarna C

**362, 362XP**

| Pitch | Gauge | Chain Type | | Drive Links | Bar Length | Drive Teeth | | | | | | |
|---|---|---|---|---|---|---|---|---|---|---|---|---|
| .325 | .050 | **ControlCut** 20BPX | **PowerCut** 20LPX | 066 | 16 | 7 | *160ATMZ095* | 160RNBK095 | | *160SLGK095* 160VXLGK095 | *160PXBK095* | |
| | | | | 072 | 18 | 7 | *180ATMZ095* | | | | 180PXBK095 | |
| | | | | 072 | 18 | 8 | | | | *180SLGK095* 180VXLGK095 | | |
| | | | | 078 | 20 | 7 | 200ATMZ095 | 200RNBK095 | | *200SLGK095* 200VXLGK095 | 200PXBK095 | |

A. The bar-and-chain application tables are organized by chainsaw brand names, shown in alphabetical order

B. Saws less than 3.8 cubic inches (62cc) are shown with a green triangle . Low kickback performance requirements in the ANSI standard apply to these saw models

C. Saws 3.8 cubic inches and larger are shown with a yellow triangle . Low kickback performance requirements in the ANSI standard do not apply to these saw models

D. Saw models are listed and further broken down into groups, with each saw model group having its own set of recommended bar-chain applications. Note: Saws made for use with multiple pitches of chain will be listed in more than one saw-model group

E. The bar-chain applications for each group of saw models are organized in sections, with each section headed by one pitch, one gauge and the recommended chain(s) having that pitch and gauge. There are multiple sections of applications for most saw-model groups depending on how many chain gauges, or other product variables apply to each group

F. Spur sprockets and rim systems can vary by tooth count. The common drive sprocket tooth count is shown

G. Where applicable, Intenz or Narrow Kerf saw chain and guide bars applications are grouped and show under the chainsaw model numbers

H. Footnotes at the bottom of the pages provide references to other areas of the catalog where tools, safety, packaged, and speciatly products are found

I. PowerSharp systems are available for some OEM saw models

See our guides for chainsaws with a **green triangle** on pages FOR 2–3

See our guides for chainsaws with a **yellow triangle** on pages FOR 2–3

Saw chain complies with low kickback performance requirements (FOR 2–3)

Saw chain does not comply with low kickback performance requirements (FOR 2–3)

H

For information on our PowerSharp Kits see pages FOR 136–137

For Bar & Chain Combos see pages FOR 100–101

Part numbers printed in *red italics* have been obsoleted. Contact your authorized Oregon distributor for availability.

# Guide Bar & Saw Chain Applications



| Saw Chain | | | | | | Guide Bars | | | | | | | |
|---|---|---|---|---|---|---|---|---|---|---|---|---|---|
| | | | | | | DuraCut™ AT | PowerCut™ RN RW GN PM | SpeedCut™ TXL | VersaCut™ VXL | ControlCut™ PXL | AdvanceCut™ SF SX PX GD MLB | Single Rivet SD DG MLE |
| Pitch | Gauge | Chain Type | Drive Links | Bar Length | Drive Teeth | Armor Tip | PowerMatch® | Pro-Lite® MG MP | Pro-Lite® SLG SLH GL GP SP | Pro-Lite® SLB | Pro-Am® | DoubleGuard® |
| **Black+Decker** | | | | | | | | | | | | |
| **Alligator, LP 1000, LLP120** | | | | | | | | | | | | |
| 1/4 | .050 | | ControlCut 25AP | 042 | 6 | 5 | | | | | | |
| **PP610** | | | | | | | | | | | | |
| 3/8 low profile | .050 | ControlCut 91PXL AdvanceCut 91PX | VersaCut 91VXL | 040 | 10 | 6 | | | | | | 100SDEA041 |
| **CCS818, LCS120, LPP120, NPP2018** | | | | | | | | | | | | |
| 3/8 low profile | .043 | AdvanceCut 90PX | | 034 | 8 | 5 | | | | | | |
| **CS1216** | | | | | | | | | | | | |
| 3/8 low profile | .050 | ControlCut 91PXL AdvanceCut 91PX | VersaCut 91VXL | 057 | 16 | 6 | | | | | | |
| **CS1518** | | | | | | | | | | | | |
| 3/8 low profile | .050 | ControlCut 91PXL AdvanceCut 91PX | VersaCut 91VXL | 062 | 18 | 6 | | | | | | 180SDEA041 |
| **LCS1020, LCS1020B** | | | | | | | | | | | | |
| 3/8 low profile | .043 | AdvanceCut 90PX | | 040 | 10 | 6 | | | | | | |
| **LCS1240** | | | | | | | | | | | | |
| 3/8 low profile | .043 | AdvanceCut 90PX | | 045 | 12 | 6 | | | | | | |
| **LH1600, Log Hog** | | | | | | | | | | | | |
| 3/8 low profile | .050 | ControlCut 91PXL AdvanceCut 91PX | VersaCut 91VXL | 056 | 16 | 6 | | | | | | |
| **Chicago Electric** | | | | | | | | | | | | |
| **67255** | | | | | | | | | | | | |
| 3/8 low profile | .050 | ControlCut 91PXL AdvanceCut 91PX | VersaCut 91VXL | 052 | 14 | 6 | | | | | 140SXEA041 | 140SDEA041 |
| **68862 Pole Saw** | | | | | | | | | | | | |
| 3/8 low profile | .050 | ControlCut 91PXL AdvanceCut 91PX | VersaCut 91VXL | 033 | 8 | | | | | | | 080SDEA041 |

See page FOR 142 for saw chain sharpening tools

* See page FOR 4 for important information on Guard Mate bar-nose tip guards

** See page FOR 4 for important information on Intenz guide bars.

† ANSI B175.1-2012 and CSA Standard Z62.3 regarding reduced kickback does not apply to pole saws or pruners

For the most current fit-up information visit **OregonProducts.com**

# Guide Bar & Saw Chain Applications



| Saw Chain | | | | Guide Bars | | | | | | | | |
|---|---|---|---|---|---|---|---|---|---|---|---|---|
| | | | | | | DuraCut™ AT | PowerCut™ RN RW GN PM | SpeedCut™ TXL | VersaCut™ VXL | ControlCut™ PXL | AdvanceCut™ SF SX PX GD MLB | Single Rivet SD DG MLE |
| Pitch | Gauge | Chain Type | Drive Links | Bar Length | Drive Teeth | Armor Tip | PowerMatch® | Pro-Lite® MG MP | Pro-Lite® SLG SLH GL GP SP | Pro-Lite® SLB | Pro-Am® | DoubleGuard® |

## Corona Clipper Pole Saw †

**TP 4000 Electric Pole Saw**

| Pitch | Gauge | Chain Type | | Drive Links | Bar Length | Drive Teeth | Armor Tip | PowerMatch® | Pro-Lite® MG MP | Pro-Lite® SLG SLH GL GP SP | Pro-Lite® SLB | Pro-Am® | DoubleGuard® |
|---|---|---|---|---|---|---|---|---|---|---|---|---|---|
| 3/8 low profile | .050 | **ControlCut** 91PXL **AdvanceCut** 91PX | **VersaCut** 91VXL | 040 | 10 | 6 | | | | | | | |

## Craftsman ▲

**3407, 3411, 3412, 3425, 3445, 3455, 3476, 34094, 34101, 34102, 34104, 34106, 34108, 34109, 34111, 34114, 34115, 34116, 34117, 34118, 34124, 34150, 34180, 34181, 34190, 34195, 35006, 35008, 35018, 35024, 35026, 35027, 35028, 35036, 35037, 35038, 35044, 35046, 35048, 35056, 35058, 35060, 35066, 35067, 35080, 35081, 35082, 35083, 35087, 35088, 35093, 35099, 35104, 35106, 35108, 35114, 35115, 35116, 35117, 35118, 35134, 35136, 35138, 35144, 35145, 35146, 35148, 35156, 35158, 35160, 35161, 35170, 35171, 35180, 35181, 35182, 35190, 35191, 35198, 35202, 35203, 35205, 35206, 35207, 35215, 35216, 35218, 35231, 35235, 35238, 35263, 35266, 35267, 35268, 35269, 35270, 35273, 35280, 35281, 35283, 35363, 35366, 35367, 35504, 35505, 35506, 35508, 35512, 35514, 35515, 35516, 35618, 35623, 35624, 35718, 35723, 35736, 35802, 36010, 36012, 36013, 36015, 36017, 36018, 36026, 36028, 36036, 36038, 36068, 36069, 36080, 36082, 36083, 36085, 36087, 36088, 36218, 38160, 38170**

PowerSharp® Compatible

| Pitch | Gauge | Chain Type | | Drive Links | Bar Length | Drive Teeth | Armor Tip | PowerMatch® | Pro-Lite® MG MP | Pro-Lite® SLG SLH GL GP SP | Pro-Lite® SLB | Pro-Am® | DoubleGuard® |
|---|---|---|---|---|---|---|---|---|---|---|---|---|---|
| | .050 | **ControlCut** 91PXL **AdvanceCut** 91PX | **VersaCut** 91VXL | 045 | 12 | 6 | | | | *120GPEA041* *120SPEA041* | | 120SXEA041 | 120SDEA041 |
| | | | | 052 | 14 | 6 | | | | | | 140SXEA041 | 140SDEA041 |
| | | | | 056 | 16 | 6 | | | | *160GPEA041* | | 160SXEA041 | 160SDEA041 |
| | | | | 062 | 18 | 6 | | | | | | | 180SDEA041 |
| | Intenz® ** | | | | | | | | | | | | |
| 3/8 low profile | .050 | **ControlCut** 91PXL **AdvanceCut** 91PX | **VersaCut** 91VXL | 045 | 12 | 6 | | | | *120SPET041* | | | |
| | | | | 052 | 14 | 6 | | | | *140SPET041* | | | 140SDET041 |
| | | | | 056 | 16 | 6 | | | | *160SPET041* | | | 160SDET041 |
| | | | | 062 | 18 | 6 | | | | | | | 180SDET041 |
| | .043 | **AdvanceCut** 90PX | | 045 | 12 | 6 | | | | | | | 124MLEA041 |
| | | | | 052 | 14 | 6 | | | | | | | 144MLEA041 |
| | | | | 056 | 16 | 6 | | | | | | | *164MLEA041* |
| **316.38070** | | | | | | | | | | | | | |
| 3/8 low profile | .050 | **ControlCut** 91PXL **AdvanceCut** 91PX | **VersaCut** 91VXL | 057 | 16 | 6 | | | | *160GPEA041* | | 160SXEA041 | 160SDEA041 |
| **316.34107 – Electric EZ Tool-less chain tensioning** | | | | | | | | | | | | | |
| 3/8 low profile | .050 | **ControlCut** 91PXL **AdvanceCut** 91PX | **VersaCut** 91VXL | 055 | 16 | 6 | | | | | | | 160SDEA318 |
| **358.34119** | | | | | | | | | | | | | |
| 3/8 low profile | .050 | **ControlCut** 91PXL **AdvanceCut** 91PX | **VersaCut** 91VXL | 055 | 16 | 6 | | | | | | | 160SDEA318 |
| **172.34120** | | | | | | | | | | | | | |
| 3/8 low profile | .050 | **ControlCut** 91PXL **AdvanceCut** 91PX | **VersaCut** 91VXL | 063 | 18 | 7 | | | | | | | 180SDEA041 |

▲ See our guides for chainsaws with a **green triangle** on pages FOR 2–3

▲ See our guides for chainsaws with a **yellow triangle** on pages FOR 2–3

Saw chain complies with low kickback performance requirements (FOR 2–3)

Saw chain does not comply with low kickback performance requirements (FOR 2–3)

For information on our PowerSharp Kits see pages FOR 136–137

For Bar & Chain Combos see pages FOR 100–101

Part numbers printed in *red italics* have been obsoleted. Contact your authorized Oregon distributor for availability.

# Guide Bar & Saw Chain Applications



| Saw Chain | | | | Guide Bars | | | | | | | | | |
|---|---|---|---|---|---|---|---|---|---|---|---|---|---|
| | | | | | | DuraCut™ AT | PowerCut™ RN RW GN PM | SpeedCut™ TXL | VersaCut™ VXL | ControlCut™ PXL | AdvanceCut™ SF SX PX GD MLB | Single Rivet SD DG MLE |
| Pitch | Gauge | Chain Type | Drive Links | Bar Length | Drive Teeth | Armor Tip | PowerMatch® | Pro-Lite® MG MP | Pro-Lite® SLG SLH GL GP SP | Pro-Lite® SLB | Pro-Am® | DoubleGuard® |
| **Craftsman** | | | | | | | | | | | | |
| **172.43983** | | | | | | | | | | | | |
| 3/8 low profile | .050 | **ControlCut** 91PXL **AdvanceCut** 91PX | **VersaCut** 91VXL | 040 | 10 | | | | | | | |
| **Pole Saw Model†: 79240, 79245, 79246** | | | | | | | | | | | | |
| 3/8 low profile | .043 | **AdvanceCut** 90PX | | 034 | 8 | 5 | | | | | | 084MLEA041 |
| | | | | 040 | 10 | 5 | | | | | | |
| **Cordless Electric: 34130, 34131** | | | | | | | | | | | | |
| 3/8 low profile | .043 | **AdvanceCut** 90PX | | 040 | 10 | | | | | | | |
| **Cordless Electric: 98023** | | | | | | | | | | | | |
| 3/8 low profile | .043 | **AdvanceCut** 90PX | | 045 | 12 | | | | | | | 124MLEA041 |
| **Cordless Electric: 98946** | | | | | | | | | | | | |
| 3/8 low profile | .050 | **ControlCut** 91PXL **AdvanceCut** 91PX | **VersaCut** 91VXL | 045 | 12 | | | | *120GPEA041* | | 120SXEA041 | 120SDEA041 |
| **358.38200** | | | | | | | | | | | | |
| Narrow Kerf | | | | | | | | | | | | |
| .325 | .050 | *95VPX* | **SpeedCut** 95TXL | 080 | 20 | 7 | | | | | | |
| **35020, 35021, 35119, 35120, 35121, 35492, 35607, 35628, 35633** | | | | | | | | | | | | |
| | .050 | **ControlCut** 20BPX | **PowerCut** 20LPX | 066 | 16 | 7 | | 160RNBK041 | | *160GLGK041* | | 160PXBK041 |
| | | | | 072 | 18 | 7 | | 180RNBK041 | | *180GLGK041* 180VXLGK041 | | 180PXBK041 |
| | | | | 078 | 20 | 7 | | | | *200GLGK041* | | 200PXBK041 |
| .325 | Intenz® ** | | | | | | | | | | | |
| | .050 | **ControlCut** 20BPX | **PowerCut** 20LPX | 072 | 18 | 7 | | | | | | *180PXBT041* |
| | | | | 078 | 20 | 7 | | | | | | 200PXBT041 |
| | Narrow Kerf | | | | | | | | | | | |
| | .050 | *95VPX* | **SpeedCut** 95TXL | 072 | 18 | 7 | | 180TXLGK041 | | | | 180MLBK041 |

See page FOR 142 for saw chain sharpening tools

* See page FOR 4 for important information on Guard Mate bar-nose tip guards

** See page FOR 4 for important information on Intenz guide bars.

† ANSI B175.1-2012 and CSA Standard Z62.3 regarding reduced kickback does not apply to pole saws or pruners

For the most current fit-up information visit **OregonProducts.com**

# Guide Bar & Saw Chain Applications



| Saw Chain | | | | Guide Bars | | | | | | | | | |
|---|---|---|---|---|---|---|---|---|---|---|---|---|---|
| | | | | | | DuraCut™ AT | PowerCut™ RN RW GN PM | SpeedCut™ TXL | VersaCut™ VXL | ControlCut™ PXL | AdvanceCut™ SF SX PX GD MLB | Single Rivet SD DG MLE |
| Pitch | Gauge | Chain Type | Drive Links | Bar Length | Drive Teeth | Armor Tip | PowerMatch® | Pro-Lite® MG MP | Pro-Lite® SLG SLH GL GP SP | Pro-Lite® SLB | Pro-Am® | DoubleGuard® |

## Craftsman

**35212, 35483, 35487, 35608, 35609, 35690, 35885 Electrics (1983 models forward), 35887, 35889**

| Pitch | Gauge | Chain Type | | Drive Links | Bar Length | Drive Teeth | Armor Tip | PowerMatch® | Pro-Lite® MG MP | Pro-Lite® SLG SLH GL GP SP | Pro-Lite® SLB | Pro-Am® | DoubleGuard® |
|---|---|---|---|---|---|---|---|---|---|---|---|---|---|
| 3/8 | .050 | **AdvanceCut** 72V | **PowerCut** 72EXL, LGX, LPX **VersaCut** 72DPX | 057 | 15 | 7 | | | | | | | |
| | | | | 060 | 16 | 7 | *160ATMD176* | 160RNDD176 | | 160VXLHD176 | | 160PXDD176 | |
| | | | | 064 | 18 | 7 | | | | 180VXLHD176 | | | |
| | | | | 066 | 18 | 7 | | 180RNDD176 | | | | 180PXDD176 | |
| | | | | 070 | 20 | 7 | 200ATMD176 | 200RNDD176 | | 200VXLHD176 | | 200PXDD176 | |
| | | | | 081 | 24 | 7 | | 240RNDD176 | | | | | |
| | | | | 092 | 28 | 7 | | 280RNDD176 | | | | | |

**35098**

| Pitch | Gauge | Chain Type | | Drive Links | Bar Length | Drive Teeth | Armor Tip | PowerMatch® | Pro-Lite® MG MP | Pro-Lite® SLG SLH GL GP SP | Pro-Lite® SLB | Pro-Am® | DoubleGuard® |
|---|---|---|---|---|---|---|---|---|---|---|---|---|---|
| 3/8 | .050 | **AdvanceCut** 72V | **PowerCut** 72EXL, LGX, LPX **VersaCut** 72DPX | 070 | 20 | 7 | Original Equipment Guide Bar | | | | | | |
| | | | | 072 | 20 | 7 | 200ATMK095 | 200RNDK095 | | 200VXLHK095 | | 200SFHK095 | |

**38188**

| Pitch | Gauge | Chain Type | | Drive Links | Bar Length | Drive Teeth | Armor Tip | PowerMatch® | Pro-Lite® MG MP | Pro-Lite® SLG SLH GL GP SP | Pro-Lite® SLB | Pro-Am® | DoubleGuard® |
|---|---|---|---|---|---|---|---|---|---|---|---|---|---|
| .325 | .050 | **ControlCut** 20BPX | **PowerCut** 20LPX | 072 | 18 | 7 | | | | *180SLGK095* 180VXLGK095 | | 180PXBK095 | |

**35084, 35085, 38180, 41AY85AR799**

Narrow Kerf

| Pitch | Gauge | Chain Type | | Drive Links | Bar Length | Drive Teeth | Armor Tip | PowerMatch® | Pro-Lite® MG MP | Pro-Lite® SLG SLH GL GP SP | Pro-Lite® SLB | Pro-Am® | DoubleGuard® |
|---|---|---|---|---|---|---|---|---|---|---|---|---|---|
| .325 | .050 | *95VPX* | **SpeedCut** 95TXL | 072 | 18 | 7 | | | 180TXLBK095 | | | 180MLBK095 | |

## Cub Cadet

**CS3916** — PowerSharp® Compatible

| Pitch | Gauge | Chain Type | | Drive Links | Bar Length | Drive Teeth | Armor Tip | PowerMatch® | Pro-Lite® MG MP | Pro-Lite® SLG SLH GL GP SP | Pro-Lite® SLB | Pro-Am® | DoubleGuard® |
|---|---|---|---|---|---|---|---|---|---|---|---|---|---|
| 3/8 low profile | .050 | **ControlCut** 91PXL **AdvanceCut** 91PX | **VersaCut** 91VXL | 052 | 14 | 6 | | | | | | 140SXEA041 | 140SDEA041 |
| | | | | 057 | 16 | 6 | | | | *160GPEA041* | | 160SXEA041 | 160SDEA041 |
| | | | | 062 | 18 | 6 | | | | | | | 180SDEA041 |

**CS5018, CS5220**

| Pitch | Gauge | Chain Type | | Drive Links | Bar Length | Drive Teeth | Armor Tip | PowerMatch® | Pro-Lite® MG MP | Pro-Lite® SLG SLH GL GP SP | Pro-Lite® SLB | Pro-Am® | DoubleGuard® |
|---|---|---|---|---|---|---|---|---|---|---|---|---|---|
| .325 | .050 | **ControlCut** 20BPX | **PowerCut** 20LPX | 066 | 16 | 7 | *160ATMZ095* | 160RNBK095 | | *160SLGK095* 160VXLGK095 | | *160PXBK095* | |
| | | | | 072 | 18 | 7 | *180ATMZ095* | | | | | 180PXBK095 | |
| | | | | 072 | 18 | 8 | | | | *180SLGK095* 180VXLGK095 | | | |
| | | | | 078 | 20 | 7 | 200ATMZ095 | 200RNBK095 | | *200SLGK095* 200VXLGK095 | | 200PXBK095 | |

**CS5720**

| Pitch | Gauge | Chain Type | | Drive Links | Bar Length | Drive Teeth | Armor Tip | PowerMatch® | Pro-Lite® MG MP | Pro-Lite® SLG SLH GL GP SP | Pro-Lite® SLB | Pro-Am® | DoubleGuard® |
|---|---|---|---|---|---|---|---|---|---|---|---|---|---|
| 3/8 | .050 | **AdvanceCut** 72V | **PowerCut** 72EXL, **LGX, LPX** **VersaCut** 72DPX | 060 | 16 | 7 | 160ATMK095 | 160RNDK095 | | 160VXLHK095 | | | |
| | | | | 068 | 18 | 7 | 180ATMK095 | 180RNDK095 | | *180SLHK095* 180VXLHK095 | | | |
| | | | | 072 | 20 | 7 | 200ATMK095 | 200RNDK095 | | 200VXLHK095 | | | |
| | | | | 084 | 24 | 7 | | 240RNDK095 | | | | | |

See our guides for chainsaws with a **green triangle** on pages FOR 2–3

See our guides for chainsaws with a **yellow triangle** on pages FOR 2–3

Saw chain complies with low kickback performance requirements (FOR 2–3)

Saw chain does not comply with low kickback performance requirements (FOR 2–3)

For information on our PowerSharp Kits see pages FOR 136–137

For Bar & Chain Combos see pages FOR 100–101

Part numbers printed in *red italics* have been obsoleted. Contact your authorized Oregon distributor for availability.

# Guide Bar & Saw Chain Applications



| Saw Chain | | | | | | Guide Bars | | | | | | |
|---|---|---|---|---|---|---|---|---|---|---|---|---|
| | | | | | | DuraCut™ AT | PowerCut™ RN RW GN PM | SpeedCut™ TXL | VersaCut™ VXL | ControlCut™ PXL | AdvanceCut™ SF SX PX GD MLB | Single Rivet SD DG MLE |
| Pitch | Gauge | Chain Type | Drive Links | Bar Length | Drive Teeth | Armor Tip | PowerMatch® | Pro-Lite® MG MP | Pro-Lite® SLG SLH GL GP SP | Pro-Lite® SLB | Pro-Am® | DoubleGuard® |
| **DeWalt** | | | | | | | | | | | | |
| **DCCS690M1, DCCS690H1, DCCS690X1, DCCS690B, DCCS670X1** | | | | | | | | | | | | |
| 3/8 low profile | .043 | **AdvanceCut** 90PX | 056 | 16 | | | | | | | | 164MLEA041 |
| **DCCS620B** | | | | | | | | | | | | |
| 3/8 low profile | .043 | **AdvanceCut** 90PX | 045 | 12 | | | | | | | | 124MLEA041 |
| **Dolmar** | | | | | | | | | | | | |
| **109, 110, 111, 115, 115i, 116, 116si, 117, 119, 120, PS-460, PS-510, PS-540, PS-5100S, PS-5105, PS-5105H, PS-6100, PS-6100H** | | | | | | | | | | | | |
| .325 | .050 | **ControlCut** 20BPX | **PowerCut** 20LPX | 066 | 16 | 7 | 160ATMZ095 | 160RNBK095 | | *160SLGK095* 160VXLGK095 | | *160PXBK095* | |
| | | | | 072 | 18 | 7 | 180ATMZ095 | | | | | 180PXBK095 | |
| | | | | 072 | 18 | 8 | | | | *180SLGK095* 180VXLGK095 | | | |
| | | | | 078 | 20 | 7 | 200ATMZ095 | 200RNBK095 | | *200SLGK095* 200VXLGK095 | | 200PXBK095 | |
| | .058 | **ControlCut** 21BPX | **PowerCut** 21LPX | 056 | 13 | 7 | | | | | *138SLBK095* 138PXLBK095 | | |
| | | | | 064 | 15 | 7 | | 158RNBK095 | | 158VXLGK095 | 158PXLBK095 | | |
| | | | | 066 | 16 | 7 | | 168RNBK095 | | 168VXLGK095 | *168SLBK095* 168PXLBK095 | 168SFGK095 168PXBK095 | |
| | | | | 072 | 18 | 7 | | 188RNBK095 | | *188SLGK095* 188VXLGK095 | 188PXLBK095 | 188SFGK095 188PXBK095 | |
| | | | | 078 | 20 | 7 | | 208RNBK095 | | *208SLGK095* 208VXLGK095 | | 208PXBK095 208SFGK095 | |
| | Narrow Kerf | | | | | | | | | | | | |
| | .050 | *95VPX* | **SpeedCut** 95TXL | 056 | 13 | 7 | | | *130MPBK095* 130TXLBK095 | | | 130MLBK095 | |
| | | | | 064 | 15 | 7 | | | 150TXLBK095 | | | 150MLBK095 | |
| | | | | 066 | 16 | 7 | | | *160MPBK095* 160TXLBK095 | | | 160MLBK095 | |
| | | | | 072 | 18 | 7 | | | 180TXLBK095 | | | 180MLBK095 | |
| | | | | 078 | 20 | 7 | | | 200TXLBK095 | | | | |
| 3/8 | .050 | **AdvanceCut** 72V | **PowerCut** 72EXL, LGX, LPX **VersaCut** 72DPX | 059 | 16 | 7 | | | | | | 160PXDK095 | |
| | | | | 060 | 16 | 7 | *160ATMK095* | 160RNDK095 | | 160VXLHK095 | | 160SFHK095 | |
| | | | | 064 | 18 | 7 | *180ATMZ095* | | | | | | |
| | | | | 070 | 20 | 7 | 200ATMZ095 | | | | | | |
| | | | | 072 | 20 | 7 | | 200RNDK095 | | 200VXLHK095 | | 200SFHK095 | |
| | | | | 084 | 24 | 7 | | 240RNDK095 | | | | | |
| | .058 | **AdvanceCut** 73V | **PowerCut** 73EXL, LGX, LPX **VersaCut** 73DPX | 059 | 16 | 7 | | | | | | | |
| | | | | 060 | 16 | 7 | 168ATMK095 | 168RNDK095 | | 168VXLHK095 | | 168SFHK095 | |
| | | | | 064 | 18 | 7 | | 188RNDZ095 | | *188SLHK095* 188VXLHK095 | | | |
| | | | | 072 | 20 | 7 | | 208RNDK095 | | 208VXLHK095 | | 208SFHK095 | |
| | | | | 084 | 24 | 7 | | 248RNDK095 | | | | | |

See page FOR 142 for saw chain sharpening tools

* See page FOR 4 for important information on Guard Mate bar-nose tip guards

** See page FOR 4 for important information on Intenz guide bars.

† ANSI B175.1-2012 and CSA Standard Z62.3 regarding reduced kickback does not apply to pole saws or pruners

For the most current fit-up information visit **OregonProducts.com**

# Guide Bar & Saw Chain Applications



**Saw Chain** | **Guide Bars**

| Pitch | Gauge | Chain Type | Drive Links | Bar Length | Drive Teeth | DuraCut™ AT Armor Tip | PowerCut™ RN RW GN PM PowerMatch® | SpeedCut™ TXL MG MP Pro-Lite® | VersaCut™ VXL SLG SLH GL GP SP Pro-Lite® | ControlCut™ PXL SLB Pro-Lite® | AdvanceCut™ SF SX PX GD MLB Pro-Am® | Single Rivet SD DG MLE DoubleGuard® |
|---|---|---|---|---|---|---|---|---|---|---|---|---|
| **Dolmar** | | | | | | | | | | | | |
| **100, 101, 102, 103, 104, 105, 108, ES-161, ES-171, ES-173A, PS-32, PS-34, PS-35, PS-45, PS-340, PS-341, PS-350, PS-400, PS-401, PS-420, PS-3300TH, PS-3410TH, PS-3410TH TLC** — PowerSharp® Compatible | | | | | | | | | | | | |
| | .050 | **ControlCut** 91PXL **AdvanceCut** 91PX | **VersaCut** 91VXL | 045 | 12 | 6 | | | | *120SPEA041* | | 120SXEA041 | 120SDEA041 |
| | | | | 052 | 14 | 6 | | | | | | 140SXEA041 | 140SDEA041 |
| | | | | 056 | 16 | 6 | | | | | | 160SXEA041 | 160SDEA041 |
| | | | | 062 | 18 | 6 | | | | | | | 180SDEA041 |
| | Intenz® ** | | | | | | | | | | | | |
| 3/8 low profile | .050 | **ControlCut** 91PXL **AdvanceCut** 91PX | **VersaCut** 91VXL | 045 | 12 | 6 | | | | | | | |
| | | | | 052 | 14 | 6 | | | | *140SPET041* | | | 140SDET041 |
| | | | | 056 | 16 | 6 | | | | *160GPET041* *160SPET041* | | | 160SDET041 |
| | | | | 062 | 18 | 6 | | | | | | | 180SDET041 |
| | .043 | **AdvanceCut** 90PX | | 045 | 12 | 6 | | | | | | | 124MLEA041 |
| | | | | 052 | 14 | 6 | | | | | | | 144MLEA041 |
| | | | | 056 | 16 | 6 | | | | | | | *164MLEA041* |
| **PS-351, PS-421** | | | | | | | | | | | | |
| 3/8 low profile | .050 | **ControlCut** 91PXL **AdvanceCut** 91PX | **VersaCut** 91VXL | 045 | 12 | 6 | | | | *120SPEA041* | | 120SXEA041 | 120SDEA041 |
| | | | | 052 | 14 | 6 | | | | | | 140SXEA041 | 140SDEA041 |
| | | | | 056 | 16 | 6 | | | | | | 160SXEA041 | 160SDEA041 |
| | Narrow Kerf | | | | | | | | | | | | |
| .325 | .050 | *95VPX* | **SpeedCut** 95TXL | 056 | 13 | 7 | | | | | | 130MLBK041 | |
| | | | | 064 | 15 | 7 | | | | | | 150MLBK041 | |
| | | | | 072 | 18 | 7 | | 180TXLGK041 | | | | 180MLBK041 | |
| **112, 113, 114, 118, PS-6800i** | | | | | | | | | | | | |
| 3/8 | .050 | **AdvanceCut** 72V | **PowerCut** 72EXL, LGX, LPX **VersaCut** 72DPX | 059 | 16 | 7 | *160ATMZ095* | | | | | 160PXDK095 | |
| | | | | 060 | 16 | 7 | 160ATMK095 | 160RNDK095 | | 160VXLHK095 | | 160SFHK095 | |
| | | | | 064 | 18 | 7 | *180ATMZ095* | | | | | | |
| | | | | 070 | 20 | 7 | 200ATMZ095 | | | | | | |
| | | | | 072 | 20 | 7 | | 200RNDK095 | | 200VXLHK095 | | 200SFHK095 | |
| | | | | 084 | 24 | 7 | | 240RNDK095 | | | | | |
| | .058 | **AdvanceCut** 73V | **PowerCut** 73EXL, LGX, LPX **VersaCut** 73DPX | 059 | 16 | 7 | | | | | | | |
| | | | | 060 | 16 | 7 | 168ATMK095 | 168RNDK095 | | 168VXLHK095 | | 168SFHK095 | |
| | | | | 064 | 18 | 7 | | 188RNDZ095 | | *188SLHK095* 188VXLHK095 | | | |
| | | | | 072 | 20 | 7 | | 208RNDK095 | | 208VXLHK095 | | 208SFHK095 | |
| | | | | 084 | 24 | 7 | | 248RNDK095 | | | | | |

See our guides for chainsaws with a **green triangle** on pages FOR 2–3

See our guides for chainsaws with a **yellow triangle** on pages FOR 2–3

Saw chain complies with low kickback performance requirements (FOR 2–3)

Saw chain does not comply with low kickback performance requirements (FOR 2–3)

For information on our PowerSharp Kits see pages FOR 136–137

For Bar & Chain Combos see pages FOR 100–101

Part numbers printed in *red italics* have been obsoleted. Contact your authorized Oregon distributor for availability.

# Guide Bar & Saw Chain Applications



| Saw Chain | | | | Guide Bars | | | | | | | | | |
|---|---|---|---|---|---|---|---|---|---|---|---|---|---|
| | | | | | | DuraCut™ AT | PowerCut™ RN RW GN PM | SpeedCut™ TXL | VersaCut™ VXL | ControlCut™ PXL | AdvanceCut™ SF SX PX GD MLB | Single Rivet SD DG MLE |
| Pitch | Gauge | Chain Type | Drive Links | Bar Length | Drive Teeth | Armor Tip | PowerMatch® | Pro-Lite® MG MP | Pro-Lite® SLG SLH GL GP SP | Pro-Lite® SLB | Pro-Am® | DoubleGuard® |

## Dolmar

**122, 123, 133, 143, 144, 152, 153, 166, CA**

| Pitch | Gauge | Chain Type | | Drive Links | Bar Length | Drive Teeth | Armor Tip | PowerMatch® | Pro-Lite® MG MP | Pro-Lite® SLG SLH GL GP SP | Pro-Lite® SLB | Pro-Am® | DoubleGuard® |
|---|---|---|---|---|---|---|---|---|---|---|---|---|---|
| 3/8 | .050 | **AdvanceCut** 72V | **PowerCut** 72EXL, LGX, LPX **VersaCut** 72DPX | 072 | 20 | 7 | | | | | | | |
| | | | | 081 | 24 | 7 | | | | | | | |
| | .058 | **AdvanceCut** 73V | **PowerCut** 73EXL, LGX, LPX **VersaCut** 73DPX | 064 | 17 | 7 | | | | | | | |
| | | | | 072 | 20 | 7 | | 208RNDD033 | | | | | |
| | | | | 089 | 26 | 7 | | | | | | | |
| | | | | 092 | 28 | 7 | | | | | | | |
| | .063 | **AdvanceCut** 75V | **PowerCut** 75EXL, LGX, LPX **VersaCut** 75DPX | 064 | 17 | 8 | | | | | | | |
| | | | | 110 | 32 | 7 | | | | | | | |
| | | | | 119 | 36 | 7 | | | | | | | |

**PS-6400, PS-6400H, PS-6400W, PS-7300, PS-7300H, PS-7300W, PS-7310, PS-7310H, PS-7900, PS-7900H, PS-7900W, PS-7910, PS-7910H, PS-7910W, PS-7910XD, PS-9000, PS-9010, PS- 9010FL...**

| Pitch | Gauge | Chain Type | | Drive Links | Bar Length | Drive Teeth | Armor Tip | PowerMatch® | Pro-Lite® MG MP | Pro-Lite® SLG SLH GL GP SP | Pro-Lite® SLB | Pro-Am® | DoubleGuard® |
|---|---|---|---|---|---|---|---|---|---|---|---|---|---|
| | .050 | **AdvanceCut** 72V | **PowerCut** 72EXL, LGX, LPX **VersaCut** 72DPX | 060 | 16 | 8 | | 160RNDD009 | | 160VXLHD009 | | | |
| | | | | 068 | 18 | 8 | *180ATMD009* | 180RNDD009 | | *180SLHD009* 180VXLHD009 | | | |
| | | | | 072 | 20 | 8 | 200ATMD009 | 200RNDD009 | | 200VXLHD009 | | 200SFHD009 | |
| | | | | 076 | 22 | 7 | | | | | | | |
| | | | | 084 | 24 | 8 | 240ATMD009 | 240RNDD009 | | | | 240SFHD009 | |
| | | | | 092 | 28 | 7 | | 280RNDD009 | | | | | |
| | | | | 093 | 28 | 7 | | 280RWDD009 | | | | | |
| | | | | 098 | 30 | 7 | | 300RNDD009 | | | | | |
| | | | | 105 | 32 | 7 | | 320RNDD009 320RWDD009 | | | | | |
| 3/8 | .058 | **AdvanceCut** 73V | **PowerCut** 73EXL, LGX, LPX **VersaCut** 73DPX | 060 | 16 | 8 | 168ATMD009 | 168RNDD009 | | 168VXLHD009 | | 168SFHD009 | |
| | | | | 068 | 18 | 8 | 188ATMD009 | 188RNDD009 | | 188VXLHD009 | | 188SFHD009 | |
| | | | | 072 | 20 | 8 | 208ATMD009 | 208RNDD009 | | *208SLHD009* 208VXLHD009 | | 208SFHD009 | |
| | | | | 076 | 22 | 7 | | 228RNDD009 | | | | | |
| | | | | 084 | 24 | 7 | 248ATMD009 | 248RNDD009 | | | | 248SFHD009 | |
| | | | | 089 | 26 | 8 | | 268RNDD009 | | | | | |
| | | | | 092 | 28 | 7 | 288ATMD009 | 288RNDD009 | | | | | |
| | | | | 102 | 30 | 8 | | 308RNDD009 | | | | | |
| | | | | 105 | 32 | 8 | | *328RNDD009* | | | | | |
| | | | | 110 | 33 | 8 | | | | | | | |
| | | | | 110 | 33 | 7 | | 338RWDD009 338PMDD009 | | | | | |
| | | | | 115 | 36 | 7 | | *368RNDD009* | | | | | |
| | | | | 119 | 37 | 7 | | 378RWDD009 378PMDD009 | | | | | |

See page FOR 142 for saw chain sharpening tools

* See page FOR 4 for important information on Guard Mate bar-nose tip guards

** See page FOR 4 for important information on Intenz guide bars.

† ANSI B175.1-2012 and CSA Standard Z62.3 regarding reduced kickback does not apply to pole saws or pruners

For the most current fit-up information visit **OregonProducts.com**

# Guide Bar & Saw Chain Applications



| Saw Chain | | | | Guide Bars | | | | | | | | | |
|---|---|---|---|---|---|---|---|---|---|---|---|---|---|
| | | | | | | DuraCut™ AT | PowerCut™ RN RW GN PM | SpeedCut™ TXL | VersaCut™ VXL | ControlCut™ PXL | AdvanceCut™ SF SX PX GD MLB | Single Rivet SD DG MLE |
| Pitch | Gauge | Chain Type | Drive Links | Bar Length | Drive Teeth | Armor Tip | PowerMatch® | Pro-Lite® MG MP | Pro-Lite® SLG SLH GL GP SP | Pro-Lite® SLB | Pro-Am® | DoubleGuard® |

## Dolmar

**...PS-6400, PS-6400H, PS-6400W, PS-7300, PS-7300H, PS-7300W, PS-7310, PS-7310H, PS-7900, PS-7900H, PS-7900W, PS-7910, PS-7910H, PS-7910W, PS-7910XD, PS-9000, PS-9010, PS- 9010FL**

| Pitch | Gauge | Chain Type | | Drive Links | Bar Length | Drive Teeth | Armor Tip | PowerMatch® | Pro-Lite® MG MP | Pro-Lite® SLG SLH GL GP SP | Pro-Lite® SLB | Pro-Am® | DoubleGuard® |
|---|---|---|---|---|---|---|---|---|---|---|---|---|---|
| 3/8 | .063 | **AdvanceCut** 75V | **PowerCut** 75EXL, LGX, LPX **VersaCut** 75DPX | 072 | 20 | 7 | 203ATMD009 | 203RNDD009 | | | | | |
| | | | | 084 | 24 | 7 | 243ATMD009 | 243RNDD009 | | | | | |
| | | | | 093 | 28 | 7 | | 283RNDD009 283RWDD009 | | | | | |
| | | | | 098 | 30 | 7 | | | | | | | |
| | | | | 105 | 32 | 7 | | 323RNDD009 323RWDD009 | | | | | |
| | | | | 110 | 34 | 7 | | 343RNDD009 | | | | | |
| | | | | 115 | 36 | 7 | | 363RNDD009 363RWDD009 | | | | | |

**PS-9000, PS-9010, PS-9010FL**

| Pitch | Gauge | Chain Type | | Drive Links | Bar Length | Drive Teeth | Armor Tip | PowerMatch® | Pro-Lite® MG MP | Pro-Lite® SLG SLH GL GP SP | Pro-Lite® SLB | Pro-Am® | DoubleGuard® |
|---|---|---|---|---|---|---|---|---|---|---|---|---|---|
| .404 | .063 | | **PowerCut** 59L, 68LX **VersaCut** 27X | 065 | 20 | 7 | | | | | | | |

## Earthquake

**CS3816, CS4116, CS3814**

| Pitch | Gauge | Chain Type | | Drive Links | Bar Length | Drive Teeth | Armor Tip | PowerMatch® | Pro-Lite® MG MP | Pro-Lite® SLG SLH GL GP SP | Pro-Lite® SLB | Pro-Am® | DoubleGuard® |
|---|---|---|---|---|---|---|---|---|---|---|---|---|---|
| 3/8 low profile | .050 | **ControlCut** 91PXL **AdvanceCut** 91PX | **VersaCut** 91VXL | 052 | 14 | 6 | | | | | | 40SXEA041 | 140SDEA041 |
| | | | | 056 | 16 | 6 | | | | *160GPEA041* | | 160SXEA041 | 160SDEA041 |
| | | | | 062 | 18 | 6 | | | | | | | 180SDEA041 |

**CS4518, CS4518B**

| Pitch | Gauge | Chain Type | | Drive Links | Bar Length | Drive Teeth | Armor Tip | PowerMatch® | Pro-Lite® MG MP | Pro-Lite® SLG SLH GL GP SP | Pro-Lite® SLB | Pro-Am® | DoubleGuard® |
|---|---|---|---|---|---|---|---|---|---|---|---|---|---|
| 3/8 low profile | .050 | **ControlCut** 91PXL **AdvanceCut** 91PX | **VersaCut** 91VXL | 062 | 18 | 6 | | | | | | | |

## Earthwise

**CCS30008, CPS40108, CVPS41008, LPS40208, NVPS42108, PS40008**

| Pitch | Gauge | Chain Type | | Drive Links | Bar Length | Drive Teeth | Armor Tip | PowerMatch® | Pro-Lite® MG MP | Pro-Lite® SLG SLH GL GP SP | Pro-Lite® SLB | Pro-Am® | DoubleGuard® |
|---|---|---|---|---|---|---|---|---|---|---|---|---|---|
| 3/8 low profile | .050 | **ControlCut** 91PXL **AdvanceCut** 91PX | **VersaCut** 91VXL | 033 | 8 | | | | | | | | 080SDEA041 |

**CPS40110, LCS32010, LPS4210, PS40010**

| Pitch | Gauge | Chain Type | | Drive Links | Bar Length | Drive Teeth | Armor Tip | PowerMatch® | Pro-Lite® MG MP | Pro-Lite® SLG SLH GL GP SP | Pro-Lite® SLB | Pro-Am® | DoubleGuard® |
|---|---|---|---|---|---|---|---|---|---|---|---|---|---|
| 3/8 low profile | .050 | **ControlCut** 91PXL **AdvanceCut** 91PX | **VersaCut** 91VXL | 040 | 10 | | | | | | | | 100SDEA041 |

**LCS32412**

| Pitch | Gauge | Chain Type | | Drive Links | Bar Length | Drive Teeth | Armor Tip | PowerMatch® | Pro-Lite® MG MP | Pro-Lite® SLG SLH GL GP SP | Pro-Lite® SLB | Pro-Am® | DoubleGuard® |
|---|---|---|---|---|---|---|---|---|---|---|---|---|---|
| 3/8 low profile | .050 | **ControlCut** 91PXL **AdvanceCut** 91PX | **VersaCut** 91VXL | 045 | 12 | 6 | | | | *120SPEA041* | | 120SXEA041, | 120SDEA041 |

See our guides for chainsaws with a **green triangle** on pages FOR 2–3

See our guides for chainsaws with a **yellow triangle** on pages FOR 2–3

Saw chain complies with low kickback performance requirements (FOR 2–3)

Saw chain does not comply with low kickback performance requirements (FOR 2–3)

For information on our PowerSharp Kits see pages FOR 136–137

For Bar & Chain Combos see pages FOR 100–101

Part numbers printed in *red italics* have been obsoleted. Contact your authorized Oregon distributor for availability.

# Guide Bar & Saw Chain Applications



| Saw Chain | | | | | | Guide Bars | | | | | | |
|---|---|---|---|---|---|---|---|---|---|---|---|---|
| | | | | | | DuraCut™ AT | PowerCut™ RN RW GN PM | SpeedCut™ TXL | VersaCut™ VXL | ControlCut™ PXL | AdvanceCut™ SF SX PX GD MLB | Single Rivet SD DG MLE |
| Pitch | Gauge | Chain Type | Drive Links | Bar Length | Drive Teeth | Armor Tip | PowerMatch® | Pro-Lite® MG MP | Pro-Lite® SLG SLH GL GP SP | Pro-Lite® SLB | Pro-Am® | DoubleGuard® |

## Earthwise

**CS30014, YT4729**

| Pitch | Gauge | Chain Type | | Drive Links | Bar Length | Drive Teeth | Armor Tip | PowerMatch® | Pro-Lite® MG MP | Pro-Lite® SLG SLH GL GP SP | Pro-Lite® SLB | Pro-Am® | DoubleGuard® |
|---|---|---|---|---|---|---|---|---|---|---|---|---|---|
| 3/8 low profile | .050 | **ControlCut** 91PXL **AdvanceCut** 91PX | **VersaCut** 91VXL | 045 | 12 | 6 | | | | *120SPEA041* | | 120SXEA041 | 120SDEA041 |
| | | | | 052 | 14 | 6 | | | | , | | 140SXEA041 | 140SDEA041, |

**CS30016, CS30116**

| Pitch | Gauge | Chain Type | | Drive Links | Bar Length | Drive Teeth | Armor Tip | PowerMatch® | Pro-Lite® MG MP | Pro-Lite® SLG SLH GL GP SP | Pro-Lite® SLB | Pro-Am® | DoubleGuard® |
|---|---|---|---|---|---|---|---|---|---|---|---|---|---|
| 3/8 low profile | .050 | **ControlCut** 91PXL **AdvanceCut** 91PX | **VersaCut** 91VXL | 056 | 16 | 6 | | | | *160GPEA041* | | 160SXEA041 | 160SDEA041 |
| | | | | 057 | 16 | 6 | Original Equipment Bar | | | | | | |

## Echo*

**CS-280E, CS-280EP, CS-290, CS-300, CS-300EVL, CS-301, CS-302 (After #0015304), CS-302S, CS303T, CS-305, CS-306, CS-310, CS-315, CS-330EVL, CS-330MX4, CS-330T, CS-340, CS-341, CS-345, CS-346, CS-351 (After #0112195), CS-352, CS-355T, CS-360, CS-360T, CS-370, CS-370F, CS-370T, CS-400, CS-400F, CS-3000, CS-3400, CS-3450, ECS-2000, ECS-3000**

**PowerSharp® Compatible**

| Pitch | Gauge | Chain Type | | Drive Links | Bar Length | Drive Teeth | Armor Tip | PowerMatch® | Pro-Lite® MG MP | Pro-Lite® SLG SLH GL GP SP | Pro-Lite® SLB | Pro-Am® | DoubleGuard® |
|---|---|---|---|---|---|---|---|---|---|---|---|---|---|
| | .050 | **ControlCut** 91PXL **AdvanceCut** 91PX | **VersaCut** 91VXL | 045 | 12 | 6 | | | | | | 120SXEA041 | 120DGEA041 |
| | | | | 052 | 14 | 6 | | | | | | 140SXEA041 | 140DGEA041 |
| | | | | 056 | 16 | 6 | | | | | | 160SXEA041 | 160DGEA041 |
| | | | | 057 | 16 | 6 | Original Equipment Guide Bar | | | | | | |
| | | | | 062 | 18 | 6 | | | | | | | 180DGEA041 |
| | Intenz® ** | | | | | | | | | | | | |
| 3/8 low profile | .050 | **ControlCut** 91PXL **AdvanceCut** 91PX | **VersaCut** 91VXL | 045 | 12 | 6 | | | | | | | 120DGET041 |
| | | | | 052 | 14 | 6 | | | | | | | 140DGET041 |
| | | | | 056 | 16 | 6 | | | | *160GPET041* | | | 160DGET041 |
| | | | | 057 | 16 | 6 | Original Equipment Guide Bar | | | | | | |
| | .043 | **AdvanceCut** 90PX | | 045 | 12 | 6 | | | | | | | 124MLEA041 |
| | | | | 052 | 14 | 6 | | | | | | | 144MLEA041 |
| | | | | 056 | 16 | 6 | | | | | | | *164MLEA041* |

**CS-271T**

| Pitch | Gauge | Chain Type | | Drive Links | Bar Length | Drive Teeth | Armor Tip | PowerMatch® | Pro-Lite® MG MP | Pro-Lite® SLG SLH GL GP SP | Pro-Lite® SLB | Pro-Am® | DoubleGuard® |
|---|---|---|---|---|---|---|---|---|---|---|---|---|---|
| 3/8 low profile | .050 | **ControlCut** 91PXL **AdvanceCut** 91PX | **VersaCut** 91VXL | 040 | 10 | 6 | | | | | | | 100SDEA041 |
| | | | | 045 | 12 | 6 | | | | *120GPEA041* | | | 120DGEA041 |
| | .043 | **AdvanceCut** 90PX | | 040 | 10 | 6 | | | | | | | |
| | | | | 045 | 12 | 6 | | | | | | | 124MLEA041 |

See page FOR 142 for saw chain sharpening tools

* See page FOR 4 for important information on Guard Mate bar-nose tip guards

** See page FOR 4 for important information on Intenz guide bars.

† ANSI B175.1-2012 and CSA Standard Z62.3 regarding reduced kickback does not apply to pole saws or pruners

For the most current fit-up information visit **OregonProducts.com**

# Guide Bar & Saw Chain Applications



| Saw Chain | | | | Guide Bars | | | | | | | | | |
|---|---|---|---|---|---|---|---|---|---|---|---|---|---|
| | | | | | | DuraCut™ | PowerCut™ | SpeedCut™ | VersaCut™ | ControlCut™ | AdvanceCut™ | Single Rivet | |
| | | | | | | AT | RN RW GN PM | TXL | VXL | PXL | SF SX PX GD MLB | SD DG MLE | |
| Pitch | Gauge | Chain Type | Drive Links | Bar Length | Drive Teeth | Armor Tip | PowerMatch® | Pro-Lite® MG MP | Pro-Lite® SLG SLH GL GP SP | Pro-Lite® SLB | Pro-Am® | DoubleGuard® | |

## Echo*

**PPF-225, PPF-280, PPT-265, PPT-265H, PPT-265S, PPT-266, PPT-266H, PPT-266S, PPT-280** — PowerSharp® Compatible

| | | | | | | | | | | | | | |
|---|---|---|---|---|---|---|---|---|---|---|---|---|---|
| | .050 | ControlCut 91PXL AdvanceCut 91PX | VersaCut 91VXL | 039 | 10 | 6 | Original Equipment Guide Bar | | | | | | |
| | | | | 040 | 10 | 6 | | | | | | | 100SDEA041 |
| | | | | 044 | 12 | 6 | Original Equipment Guide Bar | | | | | | |
| | | | | 045 | 12 | 6 | | | | *120GPEA041* | | | 120DGEA041 |
| | | | | 049 | 14 | 6 | Original Equipment Guide Bar | | | | | | |
| | | | | 052 | 14 | 6 | | | | | | | 140DGEA041 |
| | Intenz® ** | | | | | | | | | | | | |
| 3/8 low profile | .050 | ControlCut 91PXL AdvanceCut 91PX | VersaCut 91VXL | 045 | 12 | 6 | | | | | | | 120DGET041 |
| | | | | 052 | 14 | 6 | | | | | | | 140DGET041 |
| | .043 | AdvanceCut 90PX | | 039 | 10 | 6 | Original Equipment Guide Bar | | | | | | |
| | | | | 040 | 10 | 6 | | | | | | | |
| | | | | 044 | 12 | 6 | Original Equipment Guide Bar | | | | | | |
| | | | | 045 | 12 | 6 | | | | | | | 124MLEA041 |
| | | | | 049 | 14 | 6 | Original Equipment Guide Bar | | | | | | |
| | | | | 052 | 14 | 6 | | | | | | | 144MLEA041 |

**Pole Saws† PPF-210, PPF-211, PPT-230, PPT-231, PPT-260, PPT-261; Power Pruner: PP300, PP400, PP600, PP800, PP1200, PP1250, PP1260, PP1400, PP1400-D, PPF-2100, PPF-2400, PPSR-2122, PPSR-2433, PPT-2100, PPT-2400**

| | | | | | | | | | | | | | |
|---|---|---|---|---|---|---|---|---|---|---|---|---|---|
| | .050 | ControlCut 91PXL AdvanceCut 91PX | VersaCut 91VXL | 034 | 8 | 6 | | | | | | | |
| | | | | 039 | 10 | 6 | | | | | | | 100SDEA218 |
| | | | | 044 | 12 | 6 | | | | | | | 120SDEA218 |
| | Intenz ** | | | | | | | | | | | | |
| 3/8 low profile | .050 | ControlCut 91PXL AdvanceCut 91PX | VersaCut 91VXL | 044 | 12 | 6 | | | | | | | 120SDET218 |
| | .043 | AdvanceCut 90PX | | 039 | 10 | 6 | | | | | | | 104MLEA218 |
| | | | | 044 | 12 | 6 | | | | | | | 124MLEA218 |

**CS-400EVL, CS-440, CS-440EVL, CS-510, CS-520, CS-3600, CS-3900, CS-4000, CS-4100, CS-4400, CS-4500, CS-4600, CS-5000**

| | | | | | | | | | | | | | |
|---|---|---|---|---|---|---|---|---|---|---|---|---|---|
| | .050 | ControlCut 20BPX | PowerCut 20LPX | 066 | 16 | 7 | | | | *160GLGK041* | | 160GDBK041 | |
| | | | | 072 | 18 | 7 | | | | *180GLGK041* | | 180GDBK041 | |
| | | | | 078 | 20 | 7 | | | | *200GLGK041* | | 200GDBK041 | |
| | Narrow Kerf | | | | | | | | | | | | |
| .325 | .050 | *95VPX* | SpeedCut 95TXL | 056 | 13 | 7 | | | | | | 130MLBK041 | |
| | | | | 064 | 15 | 7 | | | | | | 150MLBK041 | |
| | | | | 066 | 16 | 7 | | 160TXLGK041 | | | | 160MLBK041 | |
| | | | | 072 | 18 | 7 | | 180TXLGK041 | | | | 180MLBK041 | |

See our guides for chainsaws with a **green triangle** on pages FOR 2–3

See our guides for chainsaws with a **yellow triangle** on pages FOR 2–3

Saw chain complies with low kickback performance requirements (FOR 2–3)

Saw chain does not comply with low kickback performance requirements (FOR 2–3)

For information on our PowerSharp Kits see pages FOR 136–137

For Bar & Chain Combos see pages FOR 100–101

Part numbers printed in *red italics* have been obsoleted. Contact your authorized Oregon distributor for availability.

# Guide Bar & Saw Chain Applications



| Saw Chain | | | | | | Guide Bars | | | | | | |
|---|---|---|---|---|---|---|---|---|---|---|---|---|
| | | | | | | DuraCut™ AT | PowerCut™ RN RW GN PM | SpeedCut™ TXL | VersaCut™ VXL | ControlCut™ PXL | AdvanceCut™ SF SX PX GD MLB | Single Rivet SD DG MLE |
| Pitch | Gauge | Chain Type | Drive Links | Bar Length | Drive Teeth | Armor Tip | PowerMatch® | Pro-Lite® MG MP | Pro-Lite® SLG SLH GL GP SP | Pro-Lite® SLB | Pro-Am® | DoubleGuard® |
| **Echo*** | | | | | | | | | | | | |
| **CS-450, CS-450P, CS-490, CS-500P, CS-501P, CS-530, CS-550P** | | | | | | | | | | | | |
| .325 | .050 | **ControlCut** 20BPX | **PowerCut** 20LPX | 066 | 16 | 7 | | | | 160VXLGK216 | | | |
| | | | | 072 | 18 | 7 | | | | *180GLGK216* 180VXLGK216 | | |
| | | | | 078 | 20 | 7 | | | | *200GLGK216* 200VXLGK216 | | |
| | .058 | **ControlCut** 21BPX | **PowerCut** 21LPX | 066 | 16 | 7 | | | | *168SLGK216* | | |
| | | | | 072 | 18 | 7 | | | | *188SLGK216* | | |
| | | | | 078 | 20 | 7 | | | | | | |
| | Narrow Kerf | | | | | | | | | | | |
| | .050 | *95VPX* | **SpeedCut** 95TXL | 066 | 16 | 7 | | | 160TXLGK216 | | | | |
| | | | | 072 | 18 | 7 | | | 180TXLGK216 | | | | |
| **CS-5500** | | | | | | | | | | | | |
| .325 | .050 | **ControlCut** 20BPX | **PowerCut** 20LPX | 068 | 16 | 7 | | | | | | | |
| | | | | 079 | 20 | 7 | 200ATMD176 | | | | | | |
| | | | | 091 | 24 | 7 | | | | | | | |
| **CS-60, CS-60S, CS-451, CS-452, CS-500EVL, CS-510EVL, CS-550EVL, CS-590, CS-600P, CS-601, CS-602, CST-610, CS-620P, CS-620PW, CS-706** | | | | | | | | | | | | |
| 3/8 | .050 | **AdvanceCut** 72V | **PowerCut** 72EXL, LGX, LPX **VersaCut** 72DPX | 060 | 16 | 7 | | 160RNDD176 | | *160GLHD176* | | | |
| | | | | 064 | 18 | 7 | | | | 180VXLHD176 | | | |
| | | | | 066 | 18 | 7 | | 180RNDD176 | | | | | |
| | | | | 070 | 20 | 7 | 200ATMD176 | 200RNDD176 | | *200GLHD176* | | 200GDDD176 | |
| | | | | 081 | 24 | 7 | | 240RNDD176 | | | | | |
| | | | | 084 | 24 | 7 | 240ATMD176 | | | | | | |
| | | | | 093 | 27 | 7 | | | | | | | |
| **CS-4510** | | | | | | | | | | | | |
| .325 | .050 | **ControlCut** 20BPX | **PowerCut** 20LPX | 066 | 16 | 7 | | 160RNBK095 | | 160VXLGK095 | | | |
| | | | | 072 | 18 | 7 | | | | 180VXLGK095 | | 180PXBK095 | |
| | | | | 078 | 20 | 7 | 200ATMZ095 | 200RNBK095 | | 200VXLGK095 | | 200PXBK095 | |
| | Narrow Kerf | | | | | | | | | | | | |
| | .050 | *95VPX* | **SpeedCut** 95TXL | 066 | 16 | 7 | | | 160TXLBK095 | | | 160MLBK095 | |
| | | | | 072 | 18 | 7 | | | 180TXLBK095 | | | 180MLBK095 | |
| | | | | 078 | 20 | 7 | | | 200TXLBK095 | | | | |

See page FOR 142 for saw chain sharpening tools

* See page FOR 4 for important information on Guard Mate bar-nose tip guards

** See page FOR 4 for important information on Intenz guide bars.

† ANSI B175.1-2012 and CSA Standard Z62.3 regarding reduced kickback does not apply to pole saws or pruners

For the most current fit-up information visit **OregonProducts.com**

# Guide Bar & Saw Chain Applications



**Saw Chain** | **Guide Bars**

| Pitch | Gauge | Chain Type | Drive Links | Bar Length | Drive Teeth | DuraCut™ AT | PowerCut™ RN RW GN PM | SpeedCut™ TXL | VersaCut™ VXL | ControlCut™ PXL | AdvanceCut™ SF SX PX GD MLB | Single Rivet SD DG MLE |
|---|---|---|---|---|---|---|---|---|---|---|---|---|
| | | | | | | Armor Tip | PowerMatch® | Pro-Lite® MG MP | Pro-Lite® SLG SLH GL GP SP | Pro-Lite® SLB | Pro-Am® | DoubleGuard® |

## Echo* ▲

**CS-650EVL, CS-660, CS-670, CS-680, CS-701, CS-702, CS-750EVL, CS-800P, CS-6700, CS-8000**

| Pitch | Gauge | Chain Type | | Drive Links | Bar Length | Drive Teeth | Armor Tip | PowerMatch® | Pro-Lite® MG MP | Pro-Lite® SLG SLH GL GP SP | Pro-Lite® SLB | Pro-Am® | DoubleGuard® |
|---|---|---|---|---|---|---|---|---|---|---|---|---|---|
| 3/8 | .050 | **AdvanceCut** 72V | **PowerCut** 72EXL, LGX, LPX **VersaCut** 72DPX | 060 | 16 | 7 | | *160GNDD176* 160RNDD176 | | *160GLHD176* | | | |
| | | | | 064 | 18 | 7 | | | | 180VXLHD176 | | | |
| | | | | 066 | 18 | 7 | | 180RNDD176 | | | | | |
| | | | | 070 | 20 | 7 | 200ATMD176 | *200GNDD176* | | *200GLHD176* | | 200GDDD176 | |
| | | | | 081 | 24 | 7 | | *240GNDD176* 240RNDD176 | | | | | |
| | | | | 084 | 24 | 7 | 240ATMD176 | | | | | | |
| | | | | 093 | 27 | 7 | | *270GNDD176* | | | | | |
| | | | | 105 | 32 | 7 | | *320GNDD176* | | | | | |
| | | | | 116 | 36 | 7 | | *360GNDD176* | | | | | |

**CS-900, CS-1001**

| Pitch | Gauge | Chain Type | | Drive Links | Bar Length | Drive Teeth | Armor Tip | PowerMatch® | Pro-Lite® MG MP | Pro-Lite® SLG SLH GL GP SP | Pro-Lite® SLB | Pro-Am® | DoubleGuard® |
|---|---|---|---|---|---|---|---|---|---|---|---|---|---|
| 3/8 | .050 | **AdvanceCut** 72V | **PowerCut** 72EXL, LGX, LPX **VersaCut** 72DPX | 060 | 16 | 7 | *160ATMD196* | *160RNDD196* | | | | 160GDDD096 | |
| | | | | 064 | 18 | 8 | | | | | | | |
| | | | | 066 | 18 | 7 | | | | | | | |
| | | | | 070 | 20 | 7 | | *200GNDD196* 200RNDD196 | | *200GLHD196* | | 200GDDD096 | |
| | | | | 081 | 24 | 7 | | 240RNDD196 | | | | | |
| | | | | 093 | 27 | 7 | | *270GNDD196* | | | | | |
| | .063 | **AdvanceCut** 75V | **PowerCut** 75EXL, LGX, LPX **VersaCut** 75DPX | 079 | 21 | 7 | 213ATMD196 | | | | | | |

## Efco ▲

**132S, MT 3600, MT 3700, MT 3750, MT 4000, MT 4100** — PowerSharp® Compatible

| Pitch | Gauge | Chain Type | | Drive Links | Bar Length | Drive Teeth | Armor Tip | PowerMatch® | Pro-Lite® MG MP | Pro-Lite® SLG SLH GL GP SP | Pro-Lite® SLB | Pro-Am® | DoubleGuard® |
|---|---|---|---|---|---|---|---|---|---|---|---|---|---|
| 3/8 low profile | .050 | **ControlCut** 91PXL **AdvanceCut** 91PX | **VersaCut** 91VXL | 045 | 12 | 6 | | | | *120SPEA041* | | 120SXEA041 | 120SDEA041 |
| | | | | 052 | 14 | 6 | | | | | | 140SXEA041 | 140SDEA041 |
| | | | | 056 | 16 | 6 | | | | | | 160SXEA041 | 160SDEA041 |
| | | | | 057 | 16 | 6 | Original Equipment Guide Bar | | | | | | |

**MT 3500**

| Pitch | Gauge | Chain Type | | Drive Links | Bar Length | Drive Teeth | Armor Tip | PowerMatch® | Pro-Lite® MG MP | Pro-Lite® SLG SLH GL GP SP | Pro-Lite® SLB | Pro-Am® | DoubleGuard® |
|---|---|---|---|---|---|---|---|---|---|---|---|---|---|
| 3/8 low profile | .050 | **ControlCut** 91PXL **AdvanceCut** 91PX | **VersaCut** 91VXL | 053 | 14 | 6 | | | | | | 140SXEA041 | 140SDEA041 |
| | | | | 056 | 16 | 6 | | | | | | 160SXEA041 | 160SDEA041 |
| | | | | 057 | 16 | 6 | Original Equipment Guide Bar | | | | | | |

**MT 3500 SS** — PowerSharp Equipped

| Pitch | Gauge | Chain Type | | Drive Links | Bar Length | Drive Teeth | Armor Tip | PowerMatch® | Pro-Lite® MG MP | Pro-Lite® SLG SLH GL GP SP | Pro-Lite® SLB | Pro-Am® | DoubleGuard® |
|---|---|---|---|---|---|---|---|---|---|---|---|---|---|
| 3/8 low profile | .050 | **PowerSharp®** 91PS | | 053 | 14 | 6 | | | | | | | 140SDEA041 |
| | | | | 057 | 16 | 6 | | | | | | | 160SDEA041 |

▲ See our guides for chainsaws with a **green triangle** on pages FOR 2–3

▲ See our guides for chainsaws with a **yellow triangle** on pages FOR 2–3

Saw chain complies with low kickback performance requirements (FOR 2–3)

Saw chain does not comply with low kickback performance requirements (FOR 2–3)

For information on our PowerSharp Kits see pages FOR 136–137

For Bar & Chain Combos see pages FOR 100–101

Part numbers printed in *red italics* have been obsoleted. Contact your authorized Oregon distributor for availability.

# Guide Bar & Saw Chain Applications



| Saw Chain | | | | Guide Bars | | | | | | | | | | |
|---|---|---|---|---|---|---|---|---|---|---|---|---|---|---|
| | | | | | | | DuraCut™ AT | PowerCut™ RN RW GN PM | SpeedCut™ TXL | VersaCut™ VXL | ControlCut™ PXL | AdvanceCut™ SF SX PX GD MLB | Single Rivet SD DG MLE |
| Pitch | Gauge | Chain Type | Drive Links | Bar Length | Drive Teeth | Armor Tip | PowerMatch® | Pro-Lite® MG MP | Pro-Lite® SLG SLH GL GP SP | Pro-Lite® SLB | Pro-Am® | DoubleGuard® |
| **Efco** | | | | | | | | | | | | | |
| **MT 3750 SS, MT4100 SP SS** | | | | | | | | | | | | PowerSharp Equipped | |
| 3/8 low profile | .050 | PowerSharp 91PS | 052 | 14 | 6 | | | | | | | 140SDEA041 |
| | | | 057 | 16 | 6 | | | | | | | 160SDEA041 |
| **MultiMate Pruner, Pole Pruner† PT 2500, PT 2700, PTX 2500, PTX 2700** | | | | | | | | | | | | |
| 3/8 low profile | .043 | AdvanceCut 90PX | 039 | 10 | 6 | | | | | | | 104MLEA318 |
| **147, 152, MT 5200** | | | | | | | | | | | | |
| .325 | .050 | ControlCut 20BPX | 066 | 16 | 7 | *160ATMZ095* | 160RNBK095 | | *160SLGK095* 160VXLGK095 | | *160PXBK095* | |
| | | PowerCut 20LPX | 072 | 18 | 7 | *180ATMZ095* | | | | | 180PXBK095 | |
| | | | 072 | 18 | 8 | | | | *180SLGK095* 180VXLGK095 | | | |
| | | | 078 | 20 | 8 | 200ATMZ095 | 200RNBK095 | | *200SLGK095* 200VXLGK095 | | 200PXBK095 | |
| | .058 | ControlCut 21BPX | 066 | 16 | 7 | | | | 168VXLGK095 | *168SLBK095* 168PXLBK095 | 168SFGK095 168PXBK095 | |
| | | PowerCut 21LPX | 072 | 18 | 7 | | | | *188SLGK095* 188VXLGK095 | 188PXLBK095 | 188SFGK095 188PXBK095 | |
| | | | 078 | 20 | 7 | | 208RNBK095 | | | | 208PXBK095 | |
| **MT 4400** | | | | | | | | | | | | |
| Narrow Kerf | | | | | | | | | | | | |
| .325 | .050 | *95VPX* | SpeedCut 95TXL | 066 | 16 | 7 | | | 160TXLGK041 | | | 160MLBK041 | |
| | | | | 072 | 18 | 7 | | | 180TXLGK041 | | | 180MLBK041 | |
| **Efco** | | | | | | | | | | | | |
| **156, 165** | | | | | | | | | | | | |
| .325 | .058 | ControlCut 21BPX | PowerCut 21LPX | 066 | 16 | 7 | | 168RNBK095 | | | *168SLBK095* 168PXLBK095 | 168PXBK095 | |
| | | | | 072 | 18 | 7 | | 188RNBK095 | | | 188PXLBK095 | 188PXBK095 | |
| | | | | 078 | 20 | 7 | | 208RNBK095 | | | | 208PXBK095 | |
| 3/8 | .050 | AdvanceCut 72V | PowerCut 72EXL, LGX, LPX VersaCut 72DPX | 060 | 16 | 7 | 160ATMK095 | 160RNDK095 | | 160VXLHK095 | | 160SFHK095 | |
| | | | | 068 | 18 | 7 | 180ATMK095 | 180RNDK095 | | *180SLHK095* 180VXLHK095 | | 180SFHK095 | |
| | | | | 072 | 20 | 7 | 200ATMK095 | 200RNDK095 | | 200VXLHK095 | | 200SFHK095 | |
| | | | | 084 | 24 | 7 | | 240RNDK095 | | | | | |
| | .058 | AdvanceCut 73V | PowerCut 73EXL, LGX, LPX VersaCut 73DPX | 060 | 16 | 7 | 168ATMK095 | 168RNDK095 | | 168VXLHK095 | | 168SFHK095 | |
| | | | | 068 | 18 | 7 | 188ATMK095 | 188RNDK095 | | 39450 | | 188SFHK095 | |
| | | | | 072 | 20 | 7 | 208ATMK095 | 208RNDK095 | | 208VXLHK095 | | 208SFHK095 | |
| | | | | 077 | 22 | 7 | | | | | | | |
| | | | | 084 | 24 | 7 | | 248RNDK095 | | | | | |

See page FOR 142 for saw chain sharpening tools

* See page FOR 4 for important information on Guard Mate bar-nose tip guards

** See page FOR 4 for important information on Intenz guide bars.

† ANSI B175.1-2012 and CSA Standard Z62.3 regarding reduced kickback does not apply to pole saws or pruners

For the most current fit-up information visit **OregonProducts.com**

# Guide Bar & Saw Chain Applications



**Saw Chain** | **Guide Bars**

| Pitch | Gauge | Chain Type | Drive Links | Bar Length | Drive Teeth | DuraCut™ AT Armor Tip | PowerCut™ RN RW GN PM PowerMatch® | SpeedCut™ TXL MG MP Pro-Lite® | VersaCut™ VXL SLG SLH GL GP SP Pro-Lite® | ControlCut™ PXL SLB Pro-Lite® | AdvanceCut™ SF SX PX GD MLB Pro-Am® | Single Rivet SD DG MLE DoubleGuard® |
|---|---|---|---|---|---|---|---|---|---|---|---|---|
| **Efco** | | | | | | | | | | | | |
| **181, MT 6500, MT 7200, MT 8200** | | | | | | | | | | | | |
| 3/8 | .050 | **AdvanceCut** 72V | **PowerCut** 72EXL, LGX, LPX **VersaCut** 72DPX | 060 | 16 | 8 | | 160RNDD009 | | 160VXLHD009 | | | |
| | | | | 068 | 18 | 8 | | 180RNDD009 | | *180SLHD009* 180VXLHD009 | | | |
| | | | | 072 | 20 | 8 | 200ATMD009 | 200RNDD009 | | 200VXLHD009 | | 200SFHD009 | |
| | | | | 084 | 24 | 7 | 240ATMD009 | 240RNDD009 | | | | 240SFHD009 | |
| | | | | 093 | 28 | 7 | | 280RWDD009 | | | | | |
| | .058 | **AdvanceCut** 73V | **PowerCut** 73EXL, LGX, LPX **VersaCut** 73DPX | 060 | 16 | 8 | 168ATMD009 | 168RNDD009 | | 168VXLHD009 | | 168SFHD009 | |
| | | | | 068 | 18 | 8 | 188ATMD009 | 188RNDD009 | | 188VXLHD009 | | 188SFHD009 | |
| | | | | 072 | 20 | 8 | | 208RNDD009 | | | | | |
| | | | | 076 | 22 | 7 | | 228RNDD009 | | | | | |
| | | | | 084 | 24 | 8 | 248ATMD009 | 248RNDD009 | | | | 248SFHD009 | |
| | | | | 089 | 26 | 8 | | 268RNDD009 | | | | | |
| | | | | 093 | 28 | 8 | | 288RNDD009 | | | | | |
| **Fairmont Hydraulic** | | | | | | | | | | | | |
| **38568, 43177, 43178, HCS513, HCS516, HCS520, HPS513, LimbLopper** | | | | | | | | | | | | |
| .325 | .058 | **ControlCut** 21BPX | **PowerCut** 21LPX | 056 | 13 | 7 | | | | | *138SLBK095* 138PXLBK095 | | |
| | | | | 064 | 15 | 8 | | 158RNBK095 | | 158VXLGK095 | 158PXLBK095 | | |
| | | | | 066 | 16 | 7 | | 168RNBK095 | | 168VXLGK095 | *168SLBK095* 168PXLBK095 | 168SFGK095 168PXBK095 | |
| | | | | 072 | 18 | 8 | | 188RNBK095 | | *188SLGK095* 188VXLGK095 | 188PXLBK095 | 188SFGK095 188PXBK095 | |
| | | | | 078 | 20 | 7 | | 208RNBK095 | | *208SLGK095* 208VXLGK095 | | 208PXBK095 208SFGK095 | |
| | Narrow Kerf | | | | | | | | | | | | |
| | .050 | *95VPX* | **SpeedCut** 95TXL | 056 | 13 | 7 | | | *130MPBK095* 130TXLBK095 | | | 130MLBK095 | |
| | | | | 064 | 15 | 7 | | | 150TXLBK095 | | | 150MLBK095 | |
| | | | | 066 | 16 | 7 | | | *160MPBK095* 160TXLBK095 | | | 160MLBK095 | |
| | | | | 072 | 18 | 7 | | | 180TXLBK095 | | | 180MLBK095 | |
| | | | | 078 | 20 | 7 | | | 200TXLBK095 | | | | |

See our guides for chainsaws with a **green triangle** on pages FOR 2–3

See our guides for chainsaws with a **yellow triangle** on pages FOR 2–3

Saw chain complies with low kickback performance requirements (FOR 2–3)

Saw chain does not comply with low kickback performance requirements (FOR 2–3)

For information on our PowerSharp Kits see pages FOR 136–137

For Bar & Chain Combos see pages FOR 100–101

Part numbers printed in *red italics* have been obsoleted. Contact your authorized Oregon distributor for availability.

# Guide Bar & Saw Chain Applications



| Saw Chain | | | | Guide Bars | | | | | | | | | |
|---|---|---|---|---|---|---|---|---|---|---|---|---|---|
| | | | | | | DuraCut™ AT | PowerCut™ RN RW GN PM | SpeedCut™ TXL | VersaCut™ VXL | ControlCut™ PXL | AdvanceCut™ SF SX PX GD MLB | Single Rivet SD DG MLE |
| Pitch | Gauge | Chain Type | Drive Links | Bar Length | Drive Teeth | Armor Tip | PowerMatch® | Pro-Lite® MG MP | Pro-Lite® SLG SLH GL GP SP | Pro-Lite® SLB | Pro-Am® | DoubleGuard® |

## Fairmont Hydraulic

**HCS816, HCS820, HCS824**

| Pitch | Gauge | Chain Type | | Drive Links | Bar Length | Drive Teeth | Armor Tip | PowerMatch® | Pro-Lite® MG MP | Pro-Lite® SLG SLH GL GP SP | Pro-Lite® SLB | Pro-Am® | DoubleGuard® |
|---|---|---|---|---|---|---|---|---|---|---|---|---|---|
| 3/8 | .050 | **AdvanceCut** 72V | **PowerCut** 72EXL, LGX, LPX **VersaCut** 72DPX | 060 | 16 | 7 | 160ATMK095 | 160RNDK095 | | 160VXLHK095 | | 160SFHK095 | |
| | | | | 068 | 18 | 7 | 180ATMK095 | 180RNDK095 | | *180SLHK095* 180VXLHK095 | | 180SFHK095 | |
| | | | | 072 | 20 | 7 | 200ATMK095 | 200RNDK095 | | 200VXLHK095 | | 200SFHK095 | |
| | | | | 084 | 24 | 7 | | 240RNDK095 | | | | | |
| | .058 | **AdvanceCut** 73V | **PowerCut** 73EXL, LGX, LPX **VersaCut** 73DPX | 060 | 16 | 7 | 168ATMK095 | 168RNDK095 | | 168VXLHK095 | | 168SFHK095 | |
| | | | | 068 | 18 | 7 | 188ATMK095 | 188RNDK095 | | | 39450 | 188SFHK095 | |
| | | | | 072 | 20 | 7 | 208ATMK095 | 208RNDK095 | | 208VXLHK095 | | 208SFHK095 | |
| | | | | 077 | 22 | 7 | | | | | | | |
| | | | | 084 | 24 | 7 | | 248RNDK095 | | | | | |

**H6220B1, H6310C, H6311C**

| Pitch | Gauge | Chain Type | | Drive Links | Bar Length | Drive Teeth | Armor Tip | PowerMatch® | Pro-Lite® MG MP | Pro-Lite® SLG SLH GL GP SP | Pro-Lite® SLB | Pro-Am® | DoubleGuard® |
|---|---|---|---|---|---|---|---|---|---|---|---|---|---|
| 3/8 | .050 | **AdvanceCut** 72V | **PowerCut** 72EXL, LGX, LPX **VersaCut** 72DPX | 041 | 9 | 7 | | | | | | | |

**H6220B, H6310C1, H6311C1**

| Pitch | Gauge | Chain Type | | Drive Links | Bar Length | Drive Teeth | Armor Tip | PowerMatch® | Pro-Lite® MG MP | Pro-Lite® SLG SLH GL GP SP | Pro-Lite® SLB | Pro-Am® | DoubleGuard® |
|---|---|---|---|---|---|---|---|---|---|---|---|---|---|
| 3/8 | .050 | **AdvanceCut** 72V | **PowerCut** 72EXL, LGX, LPX **VersaCut** 72DPX | 049 | 12 | 7 | | | | | | | |

**H6200B**

| Pitch | Gauge | Chain Type | | Drive Links | Bar Length | Drive Teeth | Armor Tip | PowerMatch® | Pro-Lite® MG MP | Pro-Lite® SLG SLH GL GP SP | Pro-Lite® SLB | Pro-Am® | DoubleGuard® |
|---|---|---|---|---|---|---|---|---|---|---|---|---|---|
| 3/8 | .050 | **AdvanceCut** 72V | **PowerCut** 72EXL, LGX, LPX **VersaCut** 72DPX | 060 | 16 | 7 | *160ATMD176* | 160RNDD176 | | *160GLHD176* | | 160PXDD176 | |

## Greenworks

**1400102 24V Li-ION, 20352 24V Li-ION, 20672 40V G-Max, 20302 40V G-Max, 20612 20V Li-ION, 20192 6.5A**

| Pitch | Gauge | Chain Type | | Drive Links | Bar Length | Drive Teeth | Armor Tip | PowerMatch® | Pro-Lite® MG MP | Pro-Lite® SLG SLH GL GP SP | Pro-Lite® SLB | Pro-Am® | DoubleGuard® |
|---|---|---|---|---|---|---|---|---|---|---|---|---|---|
| 3/8 low profile | .050 | **ControlCut** 91PXL **AdvanceCut** 91PX | **VersaCut** 91VXL | 033 | 8 | | | | | | | | |

**20062 7A 2-in-1, 20362 24V Li-ION, 2000102 24V Li-ION, 20V Li-ION**

| Pitch | Gauge | Chain Type | | Drive Links | Bar Length | Drive Teeth | Armor Tip | PowerMatch® | Pro-Lite® MG MP | Pro-Lite® SLG SLH GL GP SP | Pro-Lite® SLB | Pro-Am® | DoubleGuard® |
|---|---|---|---|---|---|---|---|---|---|---|---|---|---|
| 3/8 low profile | .050 | **ControlCut** 91PXL **AdvanceCut** 91PX | **VersaCut** 91VXL | 040 | 10 | 6 | | | | | | | 100SDEA041 |

**20082 40V, 20202 40V G-Max, 20262 40V G-Max, 20292 40V G-Max, 20297 40V G-Max**

| Pitch | Gauge | Chain Type | | Drive Links | Bar Length | Drive Teeth | Armor Tip | PowerMatch® | Pro-Lite® MG MP | Pro-Lite® SLG SLH GL GP SP | Pro-Lite® SLB | Pro-Am® | DoubleGuard® |
|---|---|---|---|---|---|---|---|---|---|---|---|---|---|
| 3/8 low profile | .050 | **ControlCut** 91PXL **AdvanceCut** 91PX | **VersaCut** 91VXL | 045 | 12 | 6 | | | | *120SPEA041* | | 120SXEA041 | 120SDEA041 |

See page FOR 142 for saw chain sharpening tools

* See page FOR 4 for important information on Guard Mate bar-nose tip guards

** See page FOR 4 for important information on Intenz guide bars.

† ANSI B175.1-2012 and CSA Standard Z62.3 regarding reduced kickback does not apply to pole saws or pruners

For the most current fit-up information visit **OregonProducts.com**

# Guide Bar & Saw Chain Applications



| Saw Chain | | | | Guide Bars | | | | | | | | |
|---|---|---|---|---|---|---|---|---|---|---|---|---|
| | | | | | | DuraCut™ AT | PowerCut™ RN RW GN PM | SpeedCut™ TXL | VersaCut™ VXL | ControlCut™ PXL | AdvanceCut™ SF SX PX GD MLB | Single Rivet SD DG MLE |
| Pitch | Gauge | Chain Type | Drive Links | Bar Length | Drive Teeth | Armor Tip | PowerMatch® | Pro-Lite® MG MP | Pro-Lite® SLG SLH GL GP SP | Pro-Lite® SLB | Pro-Am® | DoubleGuard® |
| **Greenworks** | | | | | | | | | | | | |
| **20012 9A Electric, 20222 9A Electric** | | | | | | | | | | | | |
| 3/8 low profile | .050 | **ControlCut** 91PXL **AdvanceCut** 91PX | **VersaCut** 91VXL | 052 | 14 | 6 | | | | | 140SXEA041 | 140SDEA041( |
| **20152 DigiPro 40V, 20312 DigiPro G-Max 40V, 20322 DigiPro G-Max 40V** | | | | | | | | | | | | |
| 3/8 low profile | .043 | **AdvanceCut** 90PX | | 056 | 16 | 6 | | | | | | 164MLEA041 |
| **20022 12A, 20232 12A, CS60L00, 2002802** | | | | | | | | | | | | |
| 3/8 low profile | .050 | **ControlCut** 91PXL **AdvanceCut** 91PX | **VersaCut** 91VXL | 056 | 16 | 6 | | | | | 160SXEA041 | 160SDEA041 |
| **GCS80420, GCS80421, 200002 80V** | | | | | | | | | | | | |
| 3/8 low profile | .050 | **ControlCut** 91PXL **AdvanceCut** 91PX | **VersaCut** 91VXL | 062 | 18 | 6 | | | | | | 180SDEA041 |
| **20032 13A, 20032 14.5** | | | | | | | | | | | | |
| 3/8 low profile | .050 | **ControlCut** 91PXL **AdvanceCut** 91PX | **VersaCut** 91VXL | 063 | 18 | 7 | | | | | | 180SDEA041 |
| **Hitachi** | | | | | | | | | | | | |
| **CS36DLP4** | | | | | | | | | | | | |
| 3/8 low profile | .050 | **ControlCut** 91PXL **AdvanceCut** 91PX | **VersaCut** 91VXL | 045 | 12 | 6 | | | *120SPEA041* | | 120SXEA041 | 120SDEA041 |
| **CS33EB** | | | | | | | | | | | | |
| 3/8 low profile | .050 | **ControlCut** 91PXL **AdvanceCut** 91PX | **VersaCut** 91VXL | 045 | 12 | 6 | | | *120SPEA041* | | 120SXEA041 | 120SDEA041 |
| | | | | 052 | 14 | 6 | | | | | 140SXEA041 | 140SDEA041 |
| | | | | 056 | 16 | 6 | | | | | 160SXEA041 | 160SDEA041 |
| | | | | 057 | 16 | 6 | Original Equipment Bar | | | | | |
| **CSET14** | | | | | | | | | | | | |
| 3/8 low profile | .050 | **ControlCut** 91PXL **AdvanceCut** 91PX | **VersaCut** 91VXL | 045 | 12 | 6 | | | | | 120SXEA041 | 120SDEA041 |
| | | | | 052 | 14 | 6 | | | | | 140SXEA041 | 140SDEA041 |

See our guides for chainsaws with a **green triangle** on pages FOR 2–3

See our guides for chainsaws with a **yellow triangle** on pages FOR 2–3

Saw chain complies with low kickback performance requirements (FOR 2–3)

Saw chain does not comply with low kickback performance requirements (FOR 2–3)

For information on our PowerSharp Kits see pages FOR 136–137

For Bar & Chain Combos see pages FOR 100–101

Part numbers printed in *red italics* have been obsoleted. Contact your authorized Oregon distributor for availability.

# Guide Bar & Saw Chain Applications



| Saw Chain | | | | | | Guide Bars | | | | | | |
|---|---|---|---|---|---|---|---|---|---|---|---|---|
| | | | | | | DuraCut™ AT | PowerCut™ RN RW GN PM | SpeedCut™ TXL | VersaCut™ VXL | ControlCut™ PXL | AdvanceCut™ SF SX PX GD MLB | Single Rivet SD DG MLE |
| Pitch | Gauge | Chain Type | Drive Links | Bar Length | Drive Teeth | Armor Tip | PowerMatch® | Pro-Lite® MG MP | Pro-Lite® SLG SLH GL GP SP | Pro-Lite® SLB | Pro-Am® | DoubleGuard® |

## Hitachi

**CS40EA18**

Narrow Kerf

| Pitch | Gauge | Chain Type | Chain Type | Drive Links | Bar Length | Drive Teeth | Armor Tip | PowerMatch® | Pro-Lite® MG MP | Pro-Lite® SLG SLH GL GP SP | Pro-Lite® SLB | Pro-Am® | DoubleGuard® |
|---|---|---|---|---|---|---|---|---|---|---|---|---|---|
| .325 | .050 | *95VPX* | **SpeedCut** 95TXL | 072 | 18 | 7 | | | 180TXLGK041 | | | 180MLBK041 | |

**CS51EAP**

| Pitch | Gauge | Chain Type | Chain Type | Drive Links | Bar Length | Drive Teeth | Armor Tip | PowerMatch® | Pro-Lite® MG MP | Pro-Lite® SLG SLH GL GP SP | Pro-Lite® SLB | Pro-Am® | DoubleGuard® |
|---|---|---|---|---|---|---|---|---|---|---|---|---|---|
| .325 | .050 | **ControlCut** 20BPX | **PowerCut** 20LPX | 078 | 20 | 7 | | | | | | 200GDBK041<br>200PXBK041<br>200GLGK041 | |

## Homelite*

**Pruner† UT15520A, Expand-It (attachment)**

| Pitch | Gauge | Chain Type | Chain Type | Drive Links | Bar Length | Drive Teeth | Armor Tip | PowerMatch® | Pro-Lite® MG MP | Pro-Lite® SLG SLH GL GP SP | Pro-Lite® SLB | Pro-Am® | DoubleGuard® |
|---|---|---|---|---|---|---|---|---|---|---|---|---|---|
| 3/8 low profile | .043 | **AdvanceCut** 90PX | | 040 | 10 | 6 | | | | | | | |

**20, 20AV, 23, 23AV, 3300, 3314, 3316, 3318, 3350, 3550, 3800, 3850, 4500, 4550, D3300, D3350B, D3850, D3850B, i3350B, PS33, RANGER, UT10510, UT10514, UT10516, UT10517, UT10530, UT10530A, UT10540, UT10544, UT10546, UT10548, UT10549, UT10560, UT10564, UT10566, UT10568, UT10569, UT10580, UT10584, UT10586, UT10588, UT10589, UT10640, UT10660, UT10680, UT10901, UT10901A, UT10926, UT10947A, UT10947D, UT10947E, UT43100, UT43102, UT43103, UT43120, UT43122, Z3850, ZR10540, ZR10560, ZR10580; Some saws may take .325" pitch chain, see other applications.**

PowerSharp® Compatible

| Pitch | Gauge | Chain Type | Chain Type | Drive Links | Bar Length | Drive Teeth | Armor Tip | PowerMatch® | Pro-Lite® MG MP | Pro-Lite® SLG SLH GL GP SP | Pro-Lite® SLB | Pro-Am® | DoubleGuard® |
|---|---|---|---|---|---|---|---|---|---|---|---|---|---|
| 3/8 low profile | .050 | **ControlCut** 91PXL **AdvanceCut** 91PX | **VersaCut** 91VXL | 045 | 12 | 6 | | | | *120GPEA041* | | | 120DGEA041 |
| | | | | 052 | 14 | 6 | | | | | | | 140DGEA041 |
| | | | | 056 | 16 | 6 | | | | *160GPEA041* | | | 160DGEA041 |
| | | | | 062 | 18 | 6 | | | | | | | 180DGEA041 |

**180 Series, 190, 192, 240, 240SL, 245 (Before #XE339), Bandit, Classic 192, Electric 200, Little Red, LX-30, Super 2, Super 2CC, VI Super 2, XEL-14, XEL Electric, XL, XL2 (After #504-2001), XL-2CC, XL-10, XL-14, XL-16; Some saws may take .325" pitch chain, see other applications.**

| Pitch | Gauge | Chain Type | Chain Type | Drive Links | Bar Length | Drive Teeth | Armor Tip | PowerMatch® | Pro-Lite® MG MP | Pro-Lite® SLG SLH GL GP SP | Pro-Lite® SLB | Pro-Am® | DoubleGuard® |
|---|---|---|---|---|---|---|---|---|---|---|---|---|---|
| 3/8 low profile | .050 | **ControlCut** 91PXL **AdvanceCut** 91PX | **VersaCut** 91VXL | 048 | 12 | 6 | | | | *120GPEA061* | | | 120DGEA061 |
| | | | | 052 | 14 | 6 | | | | *140GPEA061* | | | |
| | | | | 053 | 14 | 6 | | | | | | | 140DGEA061 |
| | | | | 059 | 16 | 6 | | | | *160GPEA061* | | | 160DGEA061 |
| | | | | 064 | 18 | 6 | | | | | | | 180DGEA061 |
| | | | | 070 | 20 | 6 | | | | | | | |

**EL-12, EL-14, EL-16**

| Pitch | Gauge | Chain Type | Chain Type | Drive Links | Bar Length | Drive Teeth | Armor Tip | PowerMatch® | Pro-Lite® MG MP | Pro-Lite® SLG SLH GL GP SP | Pro-Lite® SLB | Pro-Am® | DoubleGuard® |
|---|---|---|---|---|---|---|---|---|---|---|---|---|---|
| 3/8 low profile | .050 | **ControlCut** 91PXL **AdvanceCut** 91PX | **VersaCut** 91VXL | 045 | 12 | 5 | | | | | | | |
| | | | | 050 | 14 | 5 | | | | | | | |
| | | | | 056 | 16 | 5 | | | | | | | *160SDEA089* |

**25, 27, 4100, 4150, 4500, 4550, d4550b, i3850b, i4150b, i4550b, Super 240, Timberman, UT10518, UT10519, UT10520, ZR10520, UT10522, UT10526, UT10550, UT10552, UT10896, UT10910, UT10927A, UT10942A, UT10946A, ZR10522; Some saws may take 3/8" pitch chain, see other applications.**

| Pitch | Gauge | Chain Type | Chain Type | Drive Links | Bar Length | Drive Teeth | Armor Tip | PowerMatch® | Pro-Lite® MG MP | Pro-Lite® SLG SLH GL GP SP | Pro-Lite® SLB | Pro-Am® | DoubleGuard® |
|---|---|---|---|---|---|---|---|---|---|---|---|---|---|
| .325 | .050 | **ControlCut** 20BPX | **PowerCut** 20LPX | 066 | 16 | 7 | | | | *160GLGK041* | | 160PXBK041 | |
| | | | | 072 | 18 | 7 | | | | *180GLGK041* | | 180PXBK041 | |
| | | | | 078 | 20 | 7 | | | | | | 200PXBK041 | |
| | Intenz® ** | | | | | | | | | | | | |
| | .050 | **ControlCut** 20BPX | **PowerCut** 20LPX | 072 | 18 | 7 | | | | | | *180PXBT041* | |
| | | | | 078 | 20 | 7 | | | | | | 200PXBT041 | |

See page FOR 142 for saw chain sharpening tools

* See page FOR 4 for important information on Guard Mate bar-nose tip guards

** See page FOR 4 for important information on Intenz guide bars.

† ANSI B175.1-2012 and CSA Standard Z62.3 regarding reduced kickback does not apply to pole saws or pruners

For the most current fit-up information visit **OregonProducts.com**

# Guide Bar & Saw Chain Applications



**Saw Chain** | **Guide Bars**

| Pitch | Gauge | Chain Type | Drive Links | Bar Length | Drive Teeth | DuraCut™ AT | PowerCut™ RN RW GN PM | SpeedCut™ TXL | VersaCut™ VXL | ControlCut™ PXL | AdvanceCut™ SF SX PX GD MLB | Single Rivet SD DG MLE |
|---|---|---|---|---|---|---|---|---|---|---|---|---|
| | | | | | | Armor Tip | PowerMatch® | Pro-Lite® MG MP | Pro-Lite® SLG SLH GL GP SP | Pro-Lite® SLB | Pro-Am® | DoubleGuard® |

## Homelite* ▲

**25SL, 240, 240SL, 245 (After #XE339); Some saws may take 3/8" pitch chain, see other applications.**

| | | | | | | | | | | | | | |
|---|---|---|---|---|---|---|---|---|---|---|---|---|---|
| .325 | .050 | **ControlCut** 20BPX | **PowerCut** 20LPX | 053 | 12 | 7 | | | | | | | |
| | | | | 059 | 14 | 7 | | | | | | | |
| | | | | 067 | 16 | 7 | | | | | | | |

**290, CS-40, CS-50; Some saws may take 3/8" pitch chain, see other applications.**

| | | | | | | | | | | | | | |
|---|---|---|---|---|---|---|---|---|---|---|---|---|---|
| .325 | .050 | **ControlCut** 20BPX | **PowerCut** 20LPX | 067 | 16 | 7 | | | | | | *160PXBK095* | |
| | | | | 073 | 18 | 7 | | | | | | 180PXBK095 | |
| | | | | 079 | 20 | 7 | | | | | | 200PXBK095 | |

**30, 130, 150, 150AO, 250, 252, 290, 300 (Before 1989), 340, Big Red, EZ250, EZ250 AO, Mini SL, Super EZ AO, XL-76, XL 100 Series. Some saws may take .325" pitch chain, see other applications.**

| | | | | | | | | | | | | | |
|---|---|---|---|---|---|---|---|---|---|---|---|---|---|
| 3/8 | .050 | **AdvanceCut** 72V | **PowerCut** 72EXL, LGX, LPX **VersaCut** 72DPX | 059 | 16 | 7 | *160ATMZ095* | | | | | 160PXDK095 | |
| | | | | 064 | 18 | 7 | *180ATMZ095* | | | | | | |
| | | | | 070 | 20 | 7 | 200ATMZ095 | | | | | | |

**35SL, 330, 350, 350HG, 350SL, 360, Super XL, Super XL-AO, XL-12, XL-15**

| | | | | | | | | | | | | | |
|---|---|---|---|---|---|---|---|---|---|---|---|---|---|
| 3/8 | .050 | **AdvanceCut** 72V | **PowerCut** 72EXL, LGX, LPX **VersaCut** 72DPX | 059 | 16 | 7 | | | | | | 160GDDD096 | |
| | | | | 060 | 16 | 7 | | *160RNDD196* | | *160GLHD196* | | 160GDDD096 | |
| | | | | 064 | 18 | 7 | | | | | | | |
| | | | | 066 | 18 | 7 | | | | | | | |
| | | | | 070 | 20 | 7 | | *200GNDD196* 200RNDD196 | | *200GLHD196* | | 200GDDD096 | |
| | | | | 081 | 24 | 7 | | 240RNDD196 | | | | | |
| | | | | 093 | 27 | 7 | | *270GNDD196* | | | | | |

## Homelite* ▲

**400, 410, 450, 460, 540, 550, 650, 700, 750, 800, 825, 850, 900, 922, 923, Super XL 925, V-955, XL 400, XL 700 Series, XL 800 Series, XL 900 Series**

| | | | | | | | | | | | | | |
|---|---|---|---|---|---|---|---|---|---|---|---|---|---|
| 3/8 | .050 | **AdvanceCut** 72V | **PowerCut** 72EXL, LGX, LPX **VersaCut** 72DPX | 059 | 16 | 8 | | | | | | 160GDDD096 | |
| | | | | 060 | 16 | 7 | | *160RNDD196* | | *160GLHD196* | | 160GDDD096 | |
| | | | | 064 | 18 | 8 | | | | | | | |
| | | | | 066 | 18 | 7 | | | | | | | |
| | | | | 070 | 20 | 7 | | *200GNDD196* 200RNDD196 | | *200GLHD196* | | 200GDDD096 | |
| | | | | 081 | 24 | 7 | | 240RNDD196 | | | | | |
| | | | | 093 | 27 | 7 | | *270GNDD196* | | | | | |
| | .063 | **AdvanceCut** 75V | **PowerCut** 75EXL, LGX, LPX **VersaCut** 75DPX | 079 | 21 | 7 | 213ATMD196 | | | | | | |
| | | | | 105 | 32 | 7 | | | | | | | |
| | | | | 117 | 36 | 7 | | | | | | | |
| .404 | .063 | | **PowerCut** 59L, 68LX **VersaCut** 27X | 106 | 36 | 7 | | | | | | | |

▲ See our guides for chainsaws with a **green triangle** on pages FOR 2–3

▲ See our guides for chainsaws with a **yellow triangle** on pages FOR 2–3

Saw chain complies with low kickback performance requirements (FOR 2–3)

Saw chain does not comply with low kickback performance requirements (FOR 2–3)

For information on our PowerSharp Kits see pages FOR 136–137

For Bar & Chain Combos see pages FOR 100–101

Part numbers printed in *red italics* have been obsoleted. Contact your authorized Oregon distributor for availability.

# Guide Bar & Saw Chain Applications



| Saw Chain | | | | Guide Bars | | | | | | | | | |
|---|---|---|---|---|---|---|---|---|---|---|---|---|---|
| | | | | | | DuraCut™ AT | PowerCut™ RN RW GN PM | SpeedCut™ TXL | VersaCut™ VXL | ControlCut™ PXL | AdvanceCut™ SF SX PX GD MLB | Single Rivet SD DG MLE |
| Pitch | Gauge | Chain Type | Drive Links | Bar Length | Drive Teeth | Armor Tip | PowerMatch® | Pro-Lite® MG MP | Pro-Lite® SLG SLH GL GP SP | Pro-Lite® SLB | Pro-Am® | DoubleGuard® |

## Homelite*

**C Series, SP 1000, Super 1050, Wiz, Wiz 66, XP 1000, XP 1020, XP 1020 Super, XP 2000, XP 2100, Zip**

| | | | | | | | | | | | | | |
|---|---|---|---|---|---|---|---|---|---|---|---|---|---|
| .404 | .063 | | **PowerCut** 59L, 68LX **VersaCut** 27X | 071 | 21 | 8 | *213AF014* | | | | | | |

## Husqvarna

**51, 55, 55 Rancher, 57, 254, 254XP, 257, 261, 262, 262XP, 357XP, 357XPG, 359, 359 E-Tech, 455, 455 Rancher, 455e Rancher, 460, 460 Rancher, 543XP, 543XPG, 555, 560XP, 560XPG...**

| | | | | | | | | | | | | | |
|---|---|---|---|---|---|---|---|---|---|---|---|---|---|
| .325 | .050 | **ControlCut** 20BPX | **PowerCut** 20LPX | 066 | 16 | 7 | 160ATMK095 | 160RNBK095 | | *160SLGK095* 160VXLGK095 | | *160PXBK095* | |
| | | | | 072 | 18 | 7 | 180ATMZ095 | | | | | 180PXBK095 | |
| | | | | 072 | 18 | 8 | | | | *180SLGK095* 180VXLGK095 | | | |
| | | | | 078 | 20 | 7 | 200ATMZ095 | 200RNBK095 | | *200SLGK095* 200VXLGK095 | | 200PXBK095 | |
| | .058 | **ControlCut** 21BPX | **PowerCut** 21LPX | 056 | 13 | 7 | | | | | *138SLBK095* 138PXLBK095 | | |
| | | | | 064 | 15 | 8 | | 158RNBK095 | | 158VXLGK095 | 158PXLBK095 | | |
| | | | | 066 | 16 | 7 | | 168RNBK095 | | 168VXLGK095 | *168SLBK095* 168PXLBK095 | 168SFGK095 168PXBK095 | |
| | | | | 072 | 18 | 7 | | 188RNBK095 | | *188SLGK095* 188VXLGK095 | 188PXLBK095 | 188SFGK095 188PXBK095 | |
| | | | | 078 | 20 | 7 | | 208RNBK095 | | *208SLGK095* 208VXLGK095 | | 208PXBK095 208SFGK095 | |
| | Narrow Kerf | | | | | | | | | | | | |
| | .050 | *95VPX* | **SpeedCut** 95TXL | 056 | 13 | 7 | | | *130MPBK095* 130TXLBK095 | | | 130MLBK095 | |
| | | | | 064 | 15 | 7 | | | 150TXLBK095 | | | 150MLBK095 | |
| | | | | 066 | 16 | 7 | | | *160MPBK095* 160TXLBK095 | | | 160MLBK095 | |
| | | | | 072 | 18 | 7 | | | 180TXLBK095 | | | 180MLBK095 | |
| 3/8 | .050 | **AdvanceCut** 72V | **PowerCut** 72EXL, LGX, LPX **VersaCut** 72DPX | 060 | 16 | 7 | 160ATMK095 | 160RNDK095 | | 160VXLHK095 | | 160SFHK095 | |
| | | | | 068 | 18 | 7 | *180ATMK095* | 180RNDK095 | | *180SLHK095* 180VXLHK095 | | 180SFHK095 | |
| | | | | 072 | 20 | 7 | 200ATMK095 | 200RNDK095 | | 200VXLHK095 | | 200SFHK095 | |
| | | | | 084 | 24 | 7 | | 240RNDK095 | | | | | |
| | | | | 093 | 28 | 7 | | 280RNDK095 | | | | | |

See page FOR 142 for saw chain sharpening tools

* See page FOR 4 for important information on Guard Mate bar-nose tip guards

** See page FOR 4 for important information on Intenz guide bars.

† ANSI B175.1-2012 and CSA Standard Z62.3 regarding reduced kickback does not apply to pole saws or pruners

For the most current fit-up information visit **OregonProducts.com**

# Guide Bar & Saw Chain Applications



**Saw Chain** | **Guide Bars**

| Pitch | Gauge | Chain Type | Drive Links | Bar Length | Drive Teeth | DuraCut™ AT | PowerCut™ RN RW GN PM | SpeedCut™ TXL | VersaCut™ VXL | ControlCut™ PXL | AdvanceCut™ SF SX PX GD MLB | Single Rivet SD DG MLE |
|---|---|---|---|---|---|---|---|---|---|---|---|---|
| | | | | | | Armor Tip | PowerMatch® | Pro-Lite® MG MP | Pro-Lite® SLG SLH GL GP SP | Pro-Lite® SLB | Pro-Am® | DoubleGuard® |

## Husqvarna

**...51, 55, 55 Rancher, 57, 254, 254XP, 257, 261, 262, 262XP, 357XP, 357XPG, 359, 359 E-Tech, 455, 455 Rancher, 455e Rancher, 460, 460 Rancher, 543XP, 543XPG, 555, 560XP, 560XPG**

| Pitch | Gauge | Chain Type | Drive Links | Bar Length | Drive Teeth | Armor Tip | PowerMatch® | Pro-Lite® MG MP | Pro-Lite® SLG SLH GL GP SP | Pro-Lite® SLB | Pro-Am® | DoubleGuard® |
|---|---|---|---|---|---|---|---|---|---|---|---|---|
| 3/8 | .058 | **AdvanceCut** 73V / **PowerCut** 73EXL, LGX, LPX / **VersaCut** 73DPX | 060 | 16 | 7 | 168ATMK095 | 168RNDK095 | | 168VXLHK095 | | 168SFHK095 | |
| | | | 064 | 18 | 7 | | | | *188SLHK095* 188VXLHK095‡ | | | |
| | | | 068 | 18 | 7 | 188ATMK095 | 188RNDK095 | | 39450‡ | | 188SFHK095 | |
| | | | 072 | 20 | 7 | 208ATMK095 | 208RNDK095 | | 208VXLHK095 | | 208SFHK095 | |
| | | | 077 | 22 | 7 | | | | | | | |
| | | | 084 | 24 | 7 | | 248RNDK095 | | | | | |

‡ Correct fit-up for these Oregon guide bars required that a 6-digit part number be used in addition to the usual 10-digit part number. *188SLHK095* is designed for 3/8" – 64 DL • 39450 is for designed for 3/8" – 68 DL

**44, 45, 49, 50, 133, 154, 234, 238, 242, 242XP, 246, 340, 345, 346, 346XP, 346XP E-TECH, 346XPG, 350, 351, 353, 353 E-TECH, 435, 435E, 440E, 444, 445, 445E, 450, 450E, 545, 550XP, 550XPG**

| Pitch | Gauge | Chain Type | Drive Links | Bar Length | Drive Teeth | Armor Tip | PowerMatch® | Pro-Lite® MG MP | Pro-Lite® SLG SLH GL GP SP | Pro-Lite® SLB | Pro-Am® | DoubleGuard® |
|---|---|---|---|---|---|---|---|---|---|---|---|---|
| .325 | .050 | **ControlCut** 20BPX / **PowerCut** 20LPX | 066 | 16 | 7 | *160ATMZ095* | 160RNBK095 | | *160SLGK095* 160VXLGK095 | | *160PXBK095* | |
| | | | 072 | 18 | 7 | *180ATMZ095* | | | | | 180PXBK095 | |
| | | | | | 8 | | | | *180SLGK095* 180VXLGK095 | | | |
| | | | 078 | 20 | 8 | 200ATMZ095 | 200RNBK095 | | *200SLGK095* 200VXLGK095 | | 200PXBK095 | |
| | .058 | **ControlCut** 21BPX / **PowerCut** 21LPX | 056 | 13 | 7 | | | | | *138SLBK095* 138PXLBK095 | | |
| | | | 064 | 15 | 8 | | 158RNBK095 | | 158VXLGK095 | 158PXLBK095 | | |
| | | | 066 | 16 | 7 | | 168RNBK095 | | 168VXLGK095 | *168SLBK095* 168PXLBK095 | 168SFGK095 168PXBK095 | |
| | | | 072 | 18 | 8 | | 188RNBK095 | | *188SLGK095* 188VXLGK095 | 188PXLBK095 | 188SFGK095 188PXBK095 | |
| | | | 078 | 20 | 7 | | 208RNBK095 | | *208SLGK095* 208VXLGK095 | | 208PXBK095 208SFGK095 | |
| | Narrow Kerf | | | | | | | | | | | |
| | .050 | *95VPX* / **SpeedCut** 95TXL | 056 | 13 | 7 | | | *130MPBK095* 130TXLBK095 | | | 130MLBK095 | |
| | | | 064 | 15 | 7 | | | 150TXLBK095 | | | 150MLBK095 | |
| | | | 066 | 16 | 7 | | | *160MPBK095* 160TXLBK095 | | | 160MLBK095 | |
| | | | 072 | 18 | 7 | | | 180TXLBK095 | | | 180MLBK095 | |
| | | | 078 | 20 | 7 | | | 200TXLBK095 | | | | |

See our guides for chainsaws with a **green triangle** on pages FOR 2–3

See our guides for chainsaws with a **yellow triangle** on pages FOR 2–3

Saw chain complies with low kickback performance requirements (FOR 2–3)

Saw chain does not comply with low kickback performance requirements (FOR 2–3)

For information on our PowerSharp Kits see pages FOR 136–137

For Bar & Chain Combos see pages FOR 100–101

Part numbers printed in *red italics* have been obsoleted. Contact your authorized Oregon distributor for availability.

# Guide Bar & Saw Chain Applications



| Saw Chain | | | | | | Guide Bars | | | | | | |
|---|---|---|---|---|---|---|---|---|---|---|---|---|
| | | | | | | DuraCut™ AT | PowerCut™ RN RW GN PM | SpeedCut™ TXL | VersaCut™ VXL | ControlCut™ PXL | AdvanceCut™ SF SX PX GD MLB | Single Rivet SD DG MLE |
| Pitch | Gauge | Chain Type | Drive Links | Bar Length | Drive Teeth | Armor Tip | PowerMatch® | Pro-Lite® MG MP | Pro-Lite® SLG SLH GL GP SP | Pro-Lite® SLB | Pro-Am® | DoubleGuard® |
| **Husqvarna** | | | | | | | | | | | | |
| **23, 137, 142** | | | | | | | | | | | **PowerSharp® Compatible** | |
| | .050 | **ControlCut** 91PXL **AdvanceCut** 91PX | **VersaCut** 91VXL | 045 | 12 | 6 | | | | *120SPEA041* | | 120SXEA041 | 120SDEA041 |
| | | | | 052 | 14 | 6 | | | | | | 140SXEA041 | 140SDEA041 |
| | | | | 056 | 16 | 6 | | | | | | 160SXEA041 | 160SDEA041 |
| | | | | 062 | 18 | 6 | | | | | | | 180SDEA041 |
| | Intenz® ** | | | | | | | | | | | | |
| 3/8 low profile | .050 | **ControlCut** 91PXL **AdvanceCut** 91PX | **VersaCut** 91VXL | 045 | 12 | 6 | | | | | | | |
| | | | | 052 | 14 | 6 | | | | *140SPET041* | | | 140SDET041 |
| | | | | 056 | 16 | 6 | | | | *160SPET041* | | | 160SDET041 |
| | | | | 062 | 18 | 6 | | | | | | | 180SDET041 |
| | .043 | **AdvanceCut** 90PX | | 045 | 12 | 6 | | | | | | | 124MLEA041 |
| | | | | 052 | 14 | 6 | | | | | | | 144MLEA041 |
| | | | | 056 | 16 | 6 | | | | | | | *164MLEA041* |
| **436 Li, 536 LiXP, T536 LiXP** | | | | | | | | | | | | | |
| 3/8 low profile | .043 | **AdvanceCut** 90PX | | 040 | 10 | 6 | | | | | | | |
| | | | | 045 | 12 | 6 | | | | | | | |
| | | | | 052 | 14 | 6 | | | | | | | |
| **36, 41, 136, 141, 235, 235E, 236, 240, 240E** | | | | | | | | | | | | | |
| | .050 | **ControlCut** 91PXL **AdvanceCut** 91PX | **VersaCut** 91VXL | 045 | 12 | 6 | | | | *120SPEA041* | | 120SXEA041 | 120SDEA041 |
| | | | | 052 | 14 | 6 | | | | | | 140SXEA041 | 140SDEA041 |
| | | | | 056 | 16 | 6 | | | | | | 160SXEA041 | 160SDEA041 |
| | | | | 062 | 18 | 6 | | | | | | | 180SDEA041 |
| | Intenz® ** | | | | | | | | | | | | |
| 3/8 low profile | .050 | **ControlCut** 91PXL **AdvanceCut** 91PX | **VersaCut** 91VXL | 045 | 12 | 6 | | | | | | | |
| | | | | 052 | 14 | 6 | | | | *140SPET041* | | | 140SDET041 |
| | | | | 056 | 16 | 6 | | | | *160SPET041* | | | 160SDET041 |
| | | | | 062 | 18 | 6 | | | | | | | 180SDET041 |
| | .043 | **AdvanceCut** 90PX | | 045 | 12 | 6 | | | | | | | 124MLEA041 |
| | | | | 052 | 14 | 6 | | | | | | | 144MLEA041 |
| | | | | 056 | 16 | 6 | | | | | | | *164MLEA041* |
| .325 | .050 | **ControlCut** 20BPX | **PowerCut** 20LPX | 066 | 16 | 7 | | | | *160GLGK041* | | 160GDBK041 | |
| | | | | 072 | 18 | 7 | | | | *180GLGK041* | | 180GDBK041 | |
| | | | | 078 | 20 | 7 | *200RNBK041* | | | *200GLGK041* | | 200GDBK041 | |

See page FOR 142 for saw chain sharpening tools

* See page FOR 4 for important information on Guard Mate bar-nose tip guards

** See page FOR 4 for important information on Intenz guide bars.

† ANSI B175.1-2012 and CSA Standard Z62.3 regarding reduced kickback does not apply to pole saws or pruners

For the most current fit-up information visit **OregonProducts.com**

# Guide Bar & Saw Chain Applications



| Saw Chain | | | | | Guide Bars | | | | | | | | | |
|---|---|---|---|---|---|---|---|---|---|---|---|---|---|---|
| | | | | | | | DuraCut™ AT | PowerCut™ RN RW GN PM | SpeedCut™ TXL | VersaCut™ VXL | ControlCut™ PXL | AdvanceCut™ SF SX PX GD MLB | Single Rivet SD DG MLE |
| Pitch | Gauge | Chain Type | Drive Links | Bar Length | Drive Teeth | Armor Tip | PowerMatch® | Pro-Lite® MG MP | Pro-Lite® SLG SLH GL GP SP | Pro-Lite® SLB | Pro-Am® | DoubleGuard® |
| **Husqvarna** ▲ | | | | | | | | | | | | | |
| **61, 160, 162, 260, 465 Rancher** | | | | | | | | | | | | | |
| 3/8 | .050 | **AdvanceCut** 72V | **PowerCut** 72EXL, LGX, LPX **VersaCut** 72DPX | 060 | 16 | 8 | | 160RNDD009 | | 160VXLHD009 | | | |
| | | | | 068 | 18 | 8 | *180ATMD009* | 180RNDD009 | | *180SLHD009* 180VXLHD009 | | | |
| | | | | 072 | 20 | 8 | 200ATMD009 | 200RNDD009 | | 200VXLHD009 | | 200SFHD009 | |
| | | | | 076 | 22 | 7 | | | | | | | |
| | | | | 084 | 24 | 8 | 240ATMD009 | 240RNDD009 | | | | 240SFHD009 | |
| | | | | 093 | 28 | 7 | | 280RNDD009 280RWDD009 | | | | | |
| | .058 | **AdvanceCut** 73V | **PowerCut** 73EXL, LGX, LPX **VersaCut** 73DPX | 052 | 13 | 8 | | 138RNDD009 | | *138SLHD009* | | | |
| | | | | 056 | 15 | 8 | | | | 158VXLHD009 | | | |
| | | | | 060 | 16 | 7 | 168ATMD009 | | | 168VXLHD009 | | 168SFHD009 | |
| | | | | 060 | 16 | 8 | | 168RNDD009 | | | | | |
| | | | | 068 | 18 | 8 | 188ATMD009 | 188RNDD009 | | 188VXLHD009 | | 188SFHD009 | |
| | | | | 072 | 20 | 8 | 208ATMD009 | 208RNDD009 | | *208SLHD009* 208VXLHD009 | | 208SFHD009 | |
| | | | | 076 | 22 | 7 | | 228RNDD009 | | | | | |
| | | | | 084 | 24 | 7 | 248ATMD009 | 248RNDD009 | | | | 248SFHD009 | |
| | | | | 092 | 28 | 7 | 288ATMD009 | 288RNDD009 | | | | | |
| | .063 | **AdvanceCut** 75V | **PowerCut** 75EXL, LGX, LPX **VersaCut** 75DPX | 072 | 20 | 7 | 203ATMD009 | 203RNDD009 | | | | | |
| | | | | 084 | 24 | 7 | 243ATMD009 | 243RNDD009 | | | | | |
| **316 Electric, 334T, 335, 335XPT, T435, T540, T540XP** | | | | | | | | | | | | **PowerSharp® Compatible** | |
| 3/8 | .050 | **ControlCut** 91PXL **AdvanceCut** 91PX | **VersaCut** 91VXL | 045 | 12 | 6 | | | | *120SPEA095* | | 120SXEA095 | 120SDEA095 |
| | | | | 052 | 14 | 6 | | | | *140SPEA095* | | 140SXEA095 | 140SDEA095 |
| | | | | 056 | 16 | 6 | | | | *160SPEA095* | | 160SXEA095 | 160SDEA095 |
| | Intenz® ** | | | | | | | | | | | | |
| 3/8 low profile | .050 | **ControlCut** 91PXL **AdvanceCut** 91PX | **VersaCut** 91VXL | 045 | 12 | 6 | | | | | | | *120SDET095* |
| | | | | 052 | 14 | 6 | | | | *140SPET095* | | | 140SDET095 |
| | | | | 056 | 16 | 6 | | | | | | | *160SDET095* |
| | Narrow Kerf | | | | | | | | | | | | |
| | .043 | **AdvanceCut** 90PX | | 052 | 14 | 6 | | | | | | | *144MLEA095* |

▲ See our guides for chainsaws with a **green triangle** on pages FOR 2–3

▲ See our guides for chainsaws with a **yellow triangle** on pages FOR 2–3

Saw chain complies with low kickback performance requirements (FOR 2–3)

Saw chain does not comply with low kickback performance requirements (FOR 2–3)

For information on our PowerSharp Kits see pages FOR 136–137

For Bar & Chain Combos see pages FOR 100–101

Part numbers printed in *red italics* have been obsoleted. Contact your authorized Oregon distributor for availability.

# Guide Bar & Saw Chain Applications



| Saw Chain | | | | Guide Bars | | | | | | | | | | |
|---|---|---|---|---|---|---|---|---|---|---|---|---|---|---|
| | | | | | | | DuraCut™ AT | PowerCut™ RN RW GN PM | SpeedCut™ TXL | VersaCut™ VXL | ControlCut™ PXL | AdvanceCut™ SF SX PX GD MLB | Single Rivet SD DG MLE |
| Pitch | Gauge | Chain Type | Drive Links | Bar Length | Drive Teeth | Armor Tip | PowerMatch® | Pro-Lite® MG MP | Pro-Lite® SLG SLH GL GP SP | Pro-Lite® SLB | Pro-Am® | DoubleGuard® |
| **Husqvarna** | | | | | | | | | | | | | |
| **338XPT, 339XP, 336** | | | | | | | | | | | | | |
| 3/8 low profile | .050 | **ControlCut** 91PXL **AdvanceCut** 91PX / **VersaCut** 91VXL | 045 | 12 | 6 | | | | *120SPEA095* | | 120SXEA095 | 120SDEA095 |
| | | | 052 | 14 | 6 | | | | *140SPEA095* | | 140SXEA095 | 140SDEA095 |
| | | | 056 | 16 | 6 | | | | *160SPEA095* | | 160SXEA095 | 160SDEA095 |
| | Intenz® ** | | | | | | | | | | | | |
| | .050 | **ControlCut** 91PXL **AdvanceCut** 91PX / **VersaCut** 91VXL | 045 | 12 | 6 | | | | | | | *120SDET095* |
| | | | 052 | 14 | 6 | | | | *140SPET095* | | | 140SDET095 |
| | | | 056 | 16 | 6 | | | | | | | *160SDET095* |
| | .043 | **AdvanceCut** 90PX | 052 | 14 | 6 | | | | | | | *144MLEA095* |
| **338XPT, 339XP, 336** | | | | | | | | | | | | | |
| .325 | .050 | **ControlCut** 20BPX / **PowerCut** 20LPX | 066 | 16 | 7 | *160ATMZ095* | 160RNBK095 | | *160SLGK095* 160VXLGK095 | | *160PXBK095* | |
| | | | 072 | 18 | 7 | *180ATMZ095* | | | | | 180PXBK095 | |
| | | | 072 | 18 | 8 | | | | *180SLGK095* 180VXLGK095 | | | |
| | | | 078 | 20 | 7 | 200ATMZ095 | 200RNBK095 | | *200SLGK095* 200VXLGK095 | | 200PXBK095 | |
| | .058 | **ControlCut** 21BPX / **PowerCut** 21LPX | 056 | 13 | 7 | | | | | *138SLBK095* 138PXLBK095 | | |
| | | | 064 | 15 | 8 | | 158RNBK095 | | 158VXLGK095 | 158PXLBK095 | | |
| | | | 066 | 16 | 7 | | 168RNBK095 | | 168VXLGK095 | *168SLBK095* 168PXLBK095 | 168SFGK095 168PXBK095 | |
| | | | 072 | 18 | 8 | | 188RNBK095 | | *188SLGK095* 188VXLGK095 | 188PXLBK095 | 188SFGK095 188PXBK095 | |
| | | | 078 | 20 | 7 | | 208RNBK095 | | *208SLGK095* 208VXLGK095 | | 208PXBK095 208SFGK095 | |
| | Narrow Kerf | | | | | | | | | | | | |
| | .050 | *95VPX* / **SpeedCut** 95TXL | 056 | 13 | 7 | | | *130MPBK095* 130TXLBK095 | | | 130MLBK095 | |
| | | | 064 | 15 | 7 | | | 150TXLBK095 | | | 150MLBK095 | |
| | | | 066 | 16 | 7 | | | *160MPBK095* 160TXLBK095 | | | 160MLBK095 | |
| | | | 072 | 18 | 7 | | | 180TXLBK095 | | | 180MLBK095 | |
| **Pole Pruner†: 128LDX, 325P4, 325P5X, 326P4, 326P5X, 327P4, 327P4X, 327P5X, 525P4S, 525P5S** | | | | | | | | | | | | | |
| 3/8 low profile | .043 | **AdvanceCut** 90PX | 040 | 10 | 6 | | | | | | | |
| | | | 045 | 12 | 6 | | | | | | | |
| | .050 | **ControlCut** 91PXL **AdvanceCut** 91PX / **VersaCut** 91VXL | 040 | 10 | 6 | | | | | | | |
| | | | 045 | 12 | 6 | | | | *120SPEA095* | | 120SXEA095 | 120SDEA095 |

See page FOR 142 for saw chain sharpening tools

* See page FOR 4 for important information on Guard Mate bar-nose tip guards

** See page FOR 4 for important information on Intenz guide bars.

† ANSI B175.1-2012 and CSA Standard Z62.3 regarding reduced kickback does not apply to pole saws or pruners

For the most current fit-up information visit **OregonProducts.com**

# Guide Bar & Saw Chain Applications



| Saw Chain | | | | Guide Bars | | | | | | | | | |
|---|---|---|---|---|---|---|---|---|---|---|---|---|---|
| | | | | | | DuraCut™ AT | PowerCut™ RN RW GN PM | SpeedCut™ TXL | VersaCut™ VXL | ControlCut™ PXL | AdvanceCut™ SF SX PX GD MLB | Single Rivet SD DG MLE |
| Pitch | Gauge | Chain Type | Drive Links | Bar Length | Drive Teeth | Armor Tip | PowerMatch® | Pro-Lite® MG MP | Pro-Lite® SLG SLH GL GP SP | Pro-Lite® SLB | Pro-Am® | DoubleGuard® |

## Husqvarna

### 362, 362XP

| Pitch | Gauge | Chain Type | | Drive Links | Bar Length | Drive Teeth | Armor Tip | PowerMatch® | Pro-Lite® MG MP | Pro-Lite® SLG SLH GL GP SP | Pro-Lite® SLB | Pro-Am® | DoubleGuard® |
|---|---|---|---|---|---|---|---|---|---|---|---|---|---|
| .325 | .050 | **ControlCut** 20BPX | **PowerCut** 20LPX | 066 | 16 | 7 | *160ATMZ095* | 160RNBK095 | | *160SLGK095* 160VXLGK095 | | *160PXBK095* | |
| | | | | 072 | 18 | 7 | *180ATMZ095* | | | | | 180PXBK095 | |
| | | | | 072 | 18 | 8 | | | | *180SLGK095* 180VXLGK095 | | | |
| | | | | 078 | 20 | 7 | 200ATMZ095 | 200RNBK095 | | *200SLGK095* 200VXLGK095 | | 200PXBK095 | |
| | .058 | **ControlCut** 21BPX | **PowerCut** 21LPX | 056 | 13 | 7 | | | | | *138SLBK095* 138PXLBK095 | | |
| | | | | 064 | 15 | 8 | | 158RNBK095 | | 158VXLGK095 | 158PXLBK095 | | |
| | | | | 066 | 16 | 7 | | 168RNBK095 | | 168VXLGK095 | *168SLBK095* 168PXLBK095 | 16VXLGK095 168PXBK095 | |
| | | | | 072 | 18 | 8 | | 188RNBK095 | | *188SLGK095* 188VXLGK095 | 188PXLBK095 | 188VXLGK095 188PXBK095 | |
| | | | | 078 | 20 | 7 | | 208RNBK095 | | *208SLGK095* 208VXLGK095 | | 208PXBK095 | |
| | Narrow Kerf | | | | | | | | | | | | |
| | .050 | *95VPX* | **SpeedCut** 95TXL | 056 | 13 | 7 | | | *130MPBK095* 130TXLBK095 | | | 130MLBK095 | |
| | | | | 064 | 15 | 7 | | | 150TXLBK095 | | | 150MLBK095 | |
| | | | | 066 | 16 | 7 | | | *160MPBK095* 160TXLBK095 | | | 160MLBK095 | |
| | | | | 072 | 18 | 7 | | | 180TXLBK095 | | | 180MLBK095 | |
| 3/8 | .050 | **AdvanceCut** 72V | **PowerCut** 72EXL, LGX, LPX **VersaCut** 72DPX | 060 | 16 | 7 | 160ATMK095 | 160RNDK095 | | 160VXLHK095 | | 160SFHK095 | |
| | | | | 068 | 18 | 7 | 180ATMK095 | 180RNDK095 | | *180SLHK095* 180VXLHK095 | | 180SFHK095 | |
| | | | | 072 | 20 | 7 | 200ATMK095 | 200RNDK095 | | 200VXLHK095 | | 200SFHK095 | |
| | | | | 084 | 24 | 7 | | 240RNDK095 | | | | | |
| | | | | 093 | 28 | 7 | | 280RNDK095 | | | | | |
| | .058 | **AdvanceCut** 73V | **PowerCut** 73EXL, LGX, LPX **VersaCut** 73DPX | 060 | 16 | 7 | 168ATMK095 | 168RNDK095 | | 168VXLHK095 | | 168SFHK095 | |
| | | | | 064 | 18 | 7 | | | | *188SLHK095* 188VXLHK095‡ | | | |
| | | | | 068 | 18 | 7 | 188ATMK095 | 188RNDK095 | | 39450‡ | | 188SFHK095 | |
| | | | | 072 | 20 | 7 | 208ATMK095 | 208RNDK095 | | 208VXLHK095 | | 208SFHK095 | |
| | | | | 076 | 22 | 7 | | | | | | | |
| | | | | 084 | 24 | 7 | | 248RNDK095 | | | | | |
| | | | | 093 | 28 | 7 | | | | | | | |

‡ Correct fit-up for these Oregon guide bars required that a 6-digit part number be used in addition to the usual 10-digit part number. *188SLHK095* is designed for 3/8" – 64 DL • 39450 is for designed for 3/8" – 68 DL

See our guides for chainsaws with a **green triangle** on pages FOR 2–3

See our guides for chainsaws with a **yellow triangle** on pages FOR 2–3

Saw chain complies with low kickback performance requirements (FOR 2–3)

Saw chain does not comply with low kickback performance requirements (FOR 2–3)

For information on our PowerSharp Kits see pages FOR 136–137

For Bar & Chain Combos see pages FOR 100–101

Part numbers printed in *red italics* have been obsoleted. Contact your authorized Oregon distributor for availability.

# Guide Bar & Saw Chain Applications



**Saw Chain** | **Guide Bars**

| Pitch | Gauge | Chain Type | Drive Links | Bar Length | Drive Teeth | DuraCut™ AT | PowerCut™ RN RW GN PM | SpeedCut™ TXL | VersaCut™ VXL | ControlCut™ PXL | AdvanceCut™ SF SX PX GD MLB | Single Rivet SD DG MLE |
|---|---|---|---|---|---|---|---|---|---|---|---|---|
| | | | | | | Armor Tip | PowerMatch® | Pro-Lite® MG MP | Pro-Lite® SLG SLH GL GP SP | Pro-Lite® SLB | Pro-Am® | DoubleGuard® |

## Husqvarna

**L Series: 65, 66, 70, 77; 181, 185, 266, 268, 272, 281, 285, 288, 288XP Lite, 298, 365, 371, 372, 372XP, 372XPG, 372XPW, 380, 385, 385XP, 385XPG, 385XPW, 390XP, 390XPG, 390XPW, 394, 394XP, 395, 395XP, 395XPG, 395XPW, 480, 562XP, 562XPG, 570, 575XP, 575XPG, 575XPW, 576XP, 576XP Auto Tune, 576xpg, 576xpw, 1100, 2100, 2101, 3120, 3120XP, Jungle 3120...**

| Pitch | Gauge | Chain Type | Chain Type | Drive Links | Bar Length | Drive Teeth | Armor Tip | PowerMatch® | Pro-Lite® MG MP | Pro-Lite® SLG SLH GL GP SP | Pro-Lite® SLB | Pro-Am® | DoubleGuard® |
|---|---|---|---|---|---|---|---|---|---|---|---|---|---|
| 3/8 | .050 | **AdvanceCut** 72V | **PowerCut** 72EXL, LGX, LPX **VersaCut** 72DPX | 060 | 16 | 8 | | 160RNDD009 | | 160VXLHD009 | | | |
| | | | | 068 | 18 | 8 | 180ATMD009 | 180RNDD009 | | *180SLHD009* 180VXLHD009 | | | |
| | | | | 072 | 20 | 8 | 200ATMD009 | 200RNDD009 | | 200VXLHD009 | | 200SFHD009 | |
| | | | | 076 | 22 | 7 | | | | | | | |
| | | | | 084 | 24 | 8 | 240ATMD009 | 240RNDD009 | | | | 240SFHD009 | |
| | | | | 093 | 28 | 7 | | 280RNDD009 | | | | | |
| | | | | 093 | 28 | 7 | | 280RWDD009 | | | | | |
| | | | | 098 | 30 | 7 | | 300RNDD009 | | | | | |
| | | | | 105 | 32 | 7 | | 320RNDD009 | | | | | |
| | | | | 105 | 32 | 7 | | 320RWDD009 | | | | | |
| | .058 | **AdvanceCut** 73V | **PowerCut** 73EXL, LGX, LPX **VersaCut** 73DPX | 052 | 13 | 8 | | 138RNDD009 | | *138SLHD009* | | | |
| | | | | 056 | 15 | 8 | | | | 158VXLHD009 | | | |
| | | | | 060 | 16 | 8 | 168ATMD009 | 168RNDD009 | | 168VXLHD009 | | 168SFHD009 | |
| | | | | 068 | 18 | 8 | 188ATMD009 | 188RNDD009 | | 188VXLHD009 | | 188SFHD009 | |
| | | | | 072 | 20 | 8 | 208ATMD009 | 208RNDD009 | | *208SLHD009* 208VXLHD009 | | 208SFHD009 | |
| | | | | 076 | 22 | 7 | | 228RNDD009 | | | | | |
| | | | | 084 | 24 | 7 | 248ATMD009 | 248RNDD009 | | | | 248SFHD009 | |
| | | | | 089 | 26 | 8 | | 268RNDD009 | | | | | |
| | | | | 092 | 28 | 7 | 288ATMD009 | 288RNDD009 | | | | | |
| | | | | 102 | 30 | 8 | | 308RNDD009 | | | | | |
| | | | | 105 | 32 | 8 | | *328RNDD009* | | | | | |
| | | | | 110 | 33 | 7 | | 338RWDD009 | | | | | |
| | | | | | | 8 | | 338PMDD009 | | | | | |
| | | | | 115 | 36 | 7 | | *368RNDD009* | | | | | |
| | | | | 119 | 37 | 7 | | 378RWDD009 | | | | | |
| | | | | | | | | 378PMDD009 | | | | | |

See page FOR 142 for saw chain sharpening tools

* See page FOR 4 for important information on Guard Mate bar-nose tip guards

** See page FOR 4 for important information on Intenz guide bars.

† ANSI B175.1-2012 and CSA Standard Z62.3 regarding reduced kickback does not apply to pole saws or pruners

For the most current fit-up information visit **OregonProducts.com**

# Guide Bar & Saw Chain Applications



**Saw Chain** | **Guide Bars**

| Pitch | Gauge | Chain Type | Drive Links | Bar Length | Drive Teeth | DuraCut™ AT Armor Tip | PowerCut™ RN RW GN PM PowerMatch® | SpeedCut™ TXL MG MP Pro-Lite® | VersaCut™ VXL SLG SLH GL GP SP Pro-Lite® | ControlCut™ PXL SLB Pro-Lite® | AdvanceCut™ SF SX PX GD MLB Pro-Am® | Single Rivet SD DG MLE DoubleGuard® |
|---|---|---|---|---|---|---|---|---|---|---|---|---|
| **Husqvarna** | | | | | | | | | | | | |
| ...L Series: 65, 66, 70, 77; 181, 185, 266, 268, 272, 281, 285, 288, 288XP Lite, 298, 365, 371, 372, 372XP, 372XPG, 372XPW, 380, 385, 385XP, 385XPG, 385XPW, 390XP, 390XPG, 390XPW, 394, 394XP, 395, 395XP, 395XPG, 395XPW, 480, 562XP, 562XPG, 570, 575XP, 575XPG, 575XPW, 576XP, 576XP Auto Tune, 576xpg, 576xpw, 1100, 2100, 2101, 3120, 3120XP, Jungle 3120 | | | | | | | | | | | | |
| 3/8 | .063 | **AdvanceCut** 75V | **PowerCut** 75EXL, LGX, LPX **VersaCut** 75DPX | 072 | 20 | 7 | 203ATMD009 | 203RNDD009 | | | | |
| | | | | 084 | 24 | 7 | 243ATMD009 | 243RNDD009 | | | | |
| | | | | 093 | 28 | 7 | | 283RNDD009<br>283RWDD009 | | | | |
| | | | | 098 | 30 | 7 | | | | | | |
| | | | | 105 | 32 | 7 | | 323RNDD009<br>323RWDD009 | | | | |
| | | | | 110 | 34 | 7 | | 343RNDD009 | | | | |
| | | | | 115 | 36 | 7 | | 363RNDD009<br>363RWDD009 | | | | |
| | | | | 119 | 37 | 7 | | | | | | |
| | | | | 135 | 42 | 7 | | 423RNDD009 | | | | |
| .404 | .058 | | **PowerCut** *58L* | 100 | 33 | 7 | | | | | | |
| | .063 | | **PowerCut** 59L, 68LX **VersaCut** 27X | 065 | 20 | 7 | | | | | | |
| | | | | 092 | 30 | 7 | | | | | | |
| | | | | 095 | 32 | 7 | | | | | | |
| | | | | 104 | 36 | 7 | | 363RNFD009 | | | | |
| **John Deere** | | | | | | | | | | | | |
| 25EV, 28, 28V, 30, 30V, 35, 35EV, 40V, 200CS, 230CS, CS36, CS36LE, CS40, CS40LE, CS40V, J3816 | | | | | | | | | | | PowerSharp® Compatible | |
| 3/8 low profile | .050 | **ControlCut** 91PXL **AdvanceCut** 91PX | **VersaCut** 91VXL | 045 | 12 | 6 | | | | *120GPEA041* | | 120DGEA041 |
| | | | | 052 | 14 | 6 | | | | | | 140DGEA041 |
| | | | | 056 | 16 | 6 | | | | *160GPEA041* | | 160DGEA041 |
| | | | | 062 | 18 | 6 | | | | | | 180DGEA041 |
| | Intenz® ** | | | | | | | | | | | |
| | .050 | **ControlCut** 91PXL **AdvanceCut** 91PX | **VersaCut** 91VXL | 045 | 12 | 6 | | | | | | 120DGET041 |
| | | | | 052 | 14 | 6 | | | | | | 140DGET041 |
| | | | | 056 | 16 | 6 | | | | *160GPET041* | | 160DGET041 |
| | .043 | **AdvanceCut** 90PX | | 040 | 10 | 6 | | | | | | |
| | | | | 045 | 12 | 6 | | | | | | 124MLEA041 |
| | | | | 052 | 14 | 6 | | | | | | 144MLEA041 |
| | | | | 056 | 16 | 6 | | | | | | *164MLEA041* |

See our guides for chainsaws with a **green triangle** on pages FOR 2–3

See our guides for chainsaws with a **yellow triangle** on pages FOR 2–3

Saw chain complies with low kickback performance requirements (FOR 2–3)

Saw chain does not comply with low kickback performance requirements (FOR 2–3)

For information on our PowerSharp Kits see pages FOR 136–137

For Bar & Chain Combos see pages FOR 100–101

Part numbers printed in *red italics* have been obsoleted. Contact your authorized Oregon distributor for availability.

# Guide Bar & Saw Chain Applications



| Saw Chain | | | | Guide Bars | | | | | | | | | | |
|---|---|---|---|---|---|---|---|---|---|---|---|---|---|---|
| | | | | | | | DuraCut™ AT | PowerCut™ RN RW GN PM | SpeedCut™ TXL | VersaCut™ VXL | ControlCut™ PXL | AdvanceCut™ SF SX PX GD MLB | Single Rivet SD DG MLE |
| Pitch | Gauge | Chain Type | Drive Links | Bar Length | Drive Teeth | Armor Tip | PowerMatch® | Pro-Lite® MG MP | Pro-Lite® SLG SLH GL GP SP | Pro-Lite® SLB | Pro-Am® | DoubleGuard® |
| **John Deere** | | | | | | | | | | | | | |
| **Pruner Models†, Quick-Tatch Series: PS2393, PS2683, PSA10** | | | | | | | | | | | | | |
| 3/8 low profile | .050 | **AdvanceCut** 90PX | 040 | 10 | 6 | | | | | | | | |
| **45EV, 46EV, 300CS, 450V** | | | | | | | | | | | | | |
| .325 | .050 | **ControlCut** 20BPX | 059 | 14 | 7 | | | | | | | | |
| | | | 066 | 16 | 7 | | | | | *160GLGK041* | | 160GDBK041 | |
| | | **PowerCut** 20LPX | 072 | 18 | 7 | | | | | *180GLGK041* | | 180GDBK041 | |
| | | | 078 | 20 | 7 | | *200RNBK041* | | | *200GLGK041* | | 200GDBK041 | |
| **CS46, CS52** | | | | | | | | | | | | | |
| .325 | .050 | **ControlCut** 20BPX | 066 | 16 | 7 | *160ATMZ095* | 160RNBK095 | | | *160SLGK095* 160VXLGK095 | | *160PXBK095* | |
| | | | 072 | 18 | 7 | *180ATMZ095* | | | | | | 180PXBK095 | |
| | | **PowerCut** 20LPX | 072 | 18 | 8 | | | | | *180SLGK095* 180VXLGK095 | | | |
| | Narrow Kerf | | | | | | | | | | | | |
| | .050 | *95VPX* | 066 | 16 | 7 | | | *160MPBK095* 160TXLBK095 | | | | 160MLBK095 | |
| | | **SpeedCut** 95TXL | 072 | 18 | 7 | | | 180TXLBK095 | | | | 180MLBK095 | |
| **50AV, 50V, 51SV, 55EV, 55SV, 55V, 60V** | | | | | | | | | | | | | |
| 3/8 | .050 | **AdvanceCut** 72V | 060 | 16 | 7 | | 160RNDD176 | | | *160GLHD176* | | | |
| | | | 064 | 18 | 7 | | | | | 180VXLHD176 | | | |
| | | **PowerCut** 72EXL, LGX, LPX **VersaCut** 72DPX | 066 | 18 | 7 | | 180RNDD176 | | | | | | |
| | | | 070 | 20 | 7 | 200ATMD176 | 200RNDD176 | | | *200GLHD176* | | 200GDDD176 | |
| | | | 081 | 24 | 7 | | 240RNDD176 | | | | | | |
| | | | 084 | | 7 | 240ATMD176 | | | | | | | |
| | | | 093 | 27 | 7 | | *270GNDD176* | | | | | | |
| **CS56, CS62...** | | | | | | | | | | | | | |
| .325 | .050 | **ControlCut** 20BPX | 066 | 16 | 7 | *160ATMZ095* | 160RNBK095 | | | *160SLGK095* 160VXLGK095 | | *160PXBK095* | |
| | | | 067 | 18 | 7 | | | | | | | | |
| | | **PowerCut** 20LPX | 072 | 18 | 7 | *180ATMZ095* | | | | | | 180PXBK095 | |
| | | | 072 | 18 | 8 | | | | | *180SLGK095* 180VXLGK095 | | | |
| | | | 078 | 20 | 7 | 200ATMZ095 | 200RNBK095 | | | *200SLGK095* 200VXLGK095 | | 200PXBK095 | |
| | Narrow Kerf | | | | | | | | | | | | |
| | .050 | *95VPX* | 066 | 16 | 7 | | | *160MPBK095* 160TXLBK095 | | | | 160MLBK095 | |
| | | **SpeedCut** 95TXL | 072 | 18 | 7 | | | 180TXLBK095 | | | | 180MLBK095 | |
| | | | 078 | 20 | 7 | | | 200TXLBK095 | | | | | |

See page FOR 142 for saw chain sharpening tools

* See page FOR 4 for important information on Guard Mate bar-nose tip guards

** See page FOR 4 for important information on Intenz guide bars.

† ANSI B175.1-2012 and CSA Standard Z62.3 regarding reduced kickback does not apply to pole saws or pruners

For the most current fit-up information visit **OregonProducts.com**

# Guide Bar & Saw Chain Applications



| Saw Chain | | | | Guide Bars | | | | | | | | | |
|---|---|---|---|---|---|---|---|---|---|---|---|---|---|
| | | | | | | DuraCut™ AT | PowerCut™ RN RW GN PM | SpeedCut™ TXL | VersaCut™ VXL | ControlCut™ PXL | AdvanceCut™ SF SX PX GD MLB | Single Rivet SD DG MLE |
| Pitch | Gauge | Chain Type | Drive Links | Bar Length | Drive Teeth | Armor Tip | PowerMatch® | Pro-Lite® MG MP | Pro-Lite® SLG SLH GL GP SP | Pro-Lite® SLB | Pro-Am® | DoubleGuard® |

## John Deere

**...CS56, CS62**

| Pitch | Gauge | Chain Type | | Drive Links | Bar Length | Drive Teeth | Armor Tip | PowerMatch® | Pro-Lite® MG MP | Pro-Lite® SLG SLH GL GP SP | Pro-Lite® SLB | Pro-Am® | DoubleGuard® |
|---|---|---|---|---|---|---|---|---|---|---|---|---|---|
| 3/8 | .050 | **AdvanceCut** 72V | **PowerCut** 72EXL, LGX, LPX **VersaCut** 72DPX | 060 | 16 | 7 | *160ATMZ095* | 160RNDK095 | | 160VXLHK095 | | 160SFHK095 | |
| | | | | 064 | 18 | 7 | *180ATMZ095* | | | | | | |
| | | | | 070 | 20 | 7 | 200ATMZ095 | | | | | | |
| | | | | 072 | 20 | 7 | 200ATMK095 | 200RNDK095 | | 200VXLHK095 | | 200SFHK095 | |
| | | | | 084 | 24 | 7 | | 240RNDK095 | | | | | |

## John Deere

**65, 65EV, 65SV, 66SV, 70V, 80EV, 800V**

| | | | | | | | | | | | | | |
|---|---|---|---|---|---|---|---|---|---|---|---|---|---|
| 3/8 | .050 | **AdvanceCut** 72V | **PowerCut** 72EXL, LGX, LPX **VersaCut** 72DPX | 060 | 16 | 7 | *160ATMD176* | 160RNDD176 | | *160GLHD176* | | | |
| | | | | 064 | 18 | 7 | | | | 180VXLHD176 | | | |
| | | | | 066 | 18 | 7 | | 180RNDD176 | | | | | |
| | | | | 070 | 20 | 7 | 200ATMD176 | 200RNDD176 | | *200GLHD176* | | 200GDDD176 | |
| | | | | 081 | 24 | 7 | | 240RNDD176 | | | | | |
| | | | | 093 | 27 | 7 | | | | | | | |

**CS71, CS81 Note: D196 bar tail slot must be filed .020" for proper fit-up.**

| | | | | | | | | | | | | | |
|---|---|---|---|---|---|---|---|---|---|---|---|---|---|
| 3/8 | .050 | **AdvanceCut** 72V | **PowerCut** 72EXL, LGX, LPX **VersaCut** 72DPX | 060 | 16 | 7 | | *160RNDD196* | | | | 160GDDD096 | |
| | | | | 064 | 18 | 8 | | | | | | | |
| | | | | 066 | 18 | 7 | | | | | | | |
| | | | | 067 | 18 | 7 | | | | | | | |
| | | | | 070 | 20 | 7 | | 200RNDD196 | | *200GLHD196* | | 200GDDD096 | |
| | | | | 072 | 20 | 7 | | | | | | | |
| | | | | 081 | 24 | 7 | | 240RNDD196 | | | | | |
| | | | | 083 | 24 | 7 | | | | | | | |
| | | | | 093 | 27 | 7 | | 270RNDD196 | | | | | |
| | | | | 094 | 28 | 7 | | | | | | | |
| | .063 | **AdvanceCut** 75V | **PowerCut** 75EXL, LGX, LPX **VersaCut** 75DPX | 072 | 21 | 7 | 213ATMD196 | | | | | | |

See our guides for chainsaws with a **green triangle** on pages FOR 2–3

See our guides for chainsaws with a **yellow triangle** on pages FOR 2–3

Saw chain complies with low kickback performance requirements (FOR 2–3)

Saw chain does not comply with low kickback performance requirements (FOR 2–3)

For information on our PowerSharp Kits see pages FOR 136–137

For Bar & Chain Combos see pages FOR 100–101

Part numbers printed in *red italics* have been obsoleted. Contact your authorized Oregon distributor for availability.

# Guide Bar & Saw Chain Applications



| Saw Chain | | | | | | Guide Bars | | | | | | |
|---|---|---|---|---|---|---|---|---|---|---|---|---|
| | | | | | | DuraCut™ AT | PowerCut™ RN RW GN PM | SpeedCut™ TXL | VersaCut™ VXL | ControlCut™ PXL | AdvanceCut™ SF SX PX GD MLB | Single Rivet SD DG MLE |
| Pitch | Gauge | Chain Type | Drive Links | Bar Length | Drive Teeth | Armor Tip | PowerMatch® | Pro-Lite® MG MP | Pro-Lite® SLG SLH GL GP SP | Pro-Lite® SLB | Pro-Am® | DoubleGuard® |

## Jonsered

**2014, 2016, 2035, 2036, 2036 Turbo, 2040, 2040 Turbo, 2137, 2138, CS2135, CS2137, CS2138, CS2234, CS2238S; Some saws may take .325" pitch chain, see other applications.** — PowerSharp® Compatible

| Pitch | Gauge | Chain Type | | Drive Links | Bar Length | Drive Teeth | Armor Tip | PowerMatch® | Pro-Lite® MG MP | Pro-Lite® SLG SLH GL GP SP | Pro-Lite® SLB | Pro-Am® | DoubleGuard® |
|---|---|---|---|---|---|---|---|---|---|---|---|---|---|
| | .050 | ControlCut 91PXL AdvanceCut 91PX | VersaCut 91VXL | 045 | 12 | 6 | | | | *120SPEA041* | | 120SXEA041 | 120SDEA041 |
| | | | | 052 | 14 | 6 | | | | | | 140SXEA041 | 140SDEA041 |
| | | | | 056 | 16 | 6 | | | | | | 160SXEA041 | 160SDEA041 |
| | Intenz® ** | | | | | | | | | | | | |
| 3/8 low profile | .050 | ControlCut 91PXL AdvanceCut 91PX | VersaCut 91VXL | 045 | 12 | 6 | | | | | | | |
| | | | | 052 | 14 | 6 | | | | *140SPET041* | | | 140SDET041 |
| | | | | 056 | 16 | 6 | | | | *160SPET041* | | | 160SDET041 |
| | .043 | AdvanceCut 90PX | | 045 | 12 | 6 | | | | | | | 124MLEA041 |
| | | | | 052 | 14 | 6 | | | | | | | 144MLEA041 |
| | | | | 056 | 16 | 6 | | | | | | | *164MLEA041* |
| **36, 361, 365** | | | | | | | | | | | | | |
| 3/8 low profile | .050 | ControlCut 91PXL AdvanceCut 91PX | VersaCut 91VXL | 045 | 12 | 6 | | | | | | | |
| | | | | 052 | 14 | 6 | | | | | | | *140SDEA064* |
| | | | | 056 | 16 | 6 | | | | | | | |
| **2116E** | | | | | | | | | | | | | |
| 3/8 low profile | .050 | ControlCut 91PXL AdvanceCut 91PX | VersaCut 91VXL | 056 | 16 | 6 | | | | | | | |
| **45, 49, 50, 51, 52, 370, 410, 420, 425, 435, 450, 451, 455, 510, 521, 525, 535, 2050, 2050 Turbo, 2051, 2054, 2055, 2149, 2149 Turbo, CS2145, CS2149 Turbo, CS2150, CS2152 W, CS2153, CS2156, CS2159, CS2159C, CS2159WH, CS2163, CS2234, CS2238S, CS2240, CS2245, CS2250, CS2250S, CS2252, CS2253, CS2253WH, CS2255, CS2258, CS2260, CS2260WH; Some saws may take 3/8" pitch chain, see other applications...** | | | | | | | | | | | | | |
| | .050 | ControlCut 20BPX | PowerCut 20LPX | 066 | 16 | 7 | *160ATMZ095* | 160RNBK095 | | *160SLGK095* 160VXLGK095 | | *160PXBK095* | |
| | | | | 072 | 18 | 7 | *180ATMZ095* | | | | | 180PXBK095 | |
| | | | | 072 | 18 | 8 | | | | *180SLGK095* 180VXLGK095 | | | |
| | | | | 078 | 20 | 8 | 200ATMZ095 | 200RNBK095 | | *200SLGK095* 200VXLGK095 | | 200PXBK095 | |
| .325 | .058 | ControlCut 21BPX | PowerCut 21LPX | 056 | 13 | 7 | | | | | *138SLBK095* 138PXLBK095 | | |
| | | | | 064 | 15 | 8 | | 158RNBK095 | | 158VXLGK095 | 158PXLBK095 | | |
| | | | | 066 | 16 | 7 | | 168RNBK095 | | 168VXLGK095 | *168SLBK095* 168PXLBK095 | 168SFGK095 168PXBK095 | |
| | | | | 072 | 18 | 8 | | 188RNBK095 | | *188SLGK095* 188VXLGK095 | 188PXLBK095 | 188SFGK095 188PXBK095 | |
| | | | | 078 | 20 | 7 | | 208RNBK095 | | *208SLGK095* 208VXLGK095 | | 208PXBK095 208SFGK095 | |

See page FOR 142 for saw chain sharpening tools

* See page FOR 4 for important information on Guard Mate bar-nose tip guards

** See page FOR 4 for important information on Intenz guide bars.

† ANSI B175.1-2012 and CSA Standard Z62.3 regarding reduced kickback does not apply to pole saws or pruners

For the most current fit-up information visit **OregonProducts.com**

# Guide Bar & Saw Chain Applications



**Saw Chain** | **Guide Bars**

| Pitch | Gauge | Chain Type | Drive Links | Bar Length | Drive Teeth | DuraCut™ AT Armor Tip | PowerCut™ RN RW GN PM PowerMatch® | SpeedCut™ TXL MG MP Pro-Lite® | VersaCut™ VXL SLG SLH GL GP SP Pro-Lite® | ControlCut™ PXL SLB Pro-Lite® | AdvanceCut™ SF SX PX GD MLB Pro-Am® | Single Rivet SD DG MLE DoubleGuard® |
|---|---|---|---|---|---|---|---|---|---|---|---|---|

## Jonsered ▲

**...45, 49, 50, 51, 52, 370, 410, 420, 425, 435, 450, 451, 455, 510, 521, 525, 535, 2050, 2050 Turbo, 2051, 2054, 2055, 2149, 2149 Turbo, CS2145, CS2149 Turbo, CS2150, CS2152 W, CS2153, CS2156, CS2159, CS2159C, CS2159WH, CS2163, CS2234, CS2238S, CS2240, CS2245, CS2250, CS2250S, CS2252, CS2253, CS2253WH, CS2255, CS2258, CS2260, CS2260WH;Some saws may take 3/8" pitch chain, see other applications.**

Narrow Kerf

| Pitch | Gauge | Chain Type | Chain Type | Drive Links | Bar Length | Drive Teeth | Armor Tip | PowerMatch® | SpeedCut™ TXL MG MP Pro-Lite® | VersaCut™ VXL SLG SLH GL GP SP Pro-Lite® | ControlCut™ PXL SLB Pro-Lite® | AdvanceCut™ SF SX PX GD MLB Pro-Am® | Single Rivet SD DG MLE DoubleGuard® |
|---|---|---|---|---|---|---|---|---|---|---|---|---|---|
| .325 | .050 | *95VPX* | **SpeedCut** 95TXL | 056 | 13 | 7 | | | *130MPBK095* 130TXLBK095 | | | 130MLBK095 | |
| | | | | 064 | 15 | 7 | | | 150TXLBK095 | | | 150MLBK095 | |
| | | | | 066 | 16 | 7 | | | *160MPBK095* 160TXLBK095 | | | 160MLBK095 | |
| | | | | 072 | 18 | 7 | | | 180TXLBK095 | | | 180MLBK095 | |
| | | | | 078 | 20 | 7 | | | 200TXLBK095 | | | | |

**490, 520SP, 525, 535, 590, 2051, 2054, 2055, 2063, 2163, CS2050, CS2050 Turbo, CS2149, CS2156, CS2159, CS2159 C, CS2159 CWH, CS2159 WH, CS2163, CS2163 WH, CS2238S, CS2255, CS2258, CS2260, CS2260 WH; Some saws may take .325" pitch chain, see other applications.**

| Pitch | Gauge | Chain Type | Chain Type | Drive Links | Bar Length | Drive Teeth | Armor Tip | PowerMatch® | SpeedCut™ TXL MG MP Pro-Lite® | VersaCut™ VXL SLG SLH GL GP SP Pro-Lite® | ControlCut™ PXL SLB Pro-Lite® | AdvanceCut™ SF SX PX GD MLB Pro-Am® | Single Rivet SD DG MLE DoubleGuard® |
|---|---|---|---|---|---|---|---|---|---|---|---|---|---|
| | .050 | **AdvanceCut** 72V | **PowerCut** 72EXL, LGX, LPX **VersaCut** 72DPX | 059 | 16 | 7 | *160ATMZ095* | | | | | 160PXDK095 | |
| | | | | 060 | 16 | 7 | *160ATMK095* | 160RNDK095 | | 160VXLHK095 | | 160SFHK095 | |
| | | | | 064 | 18 | 7 | *180ATMZ095* | | | | | | |
| | | | | 070 | 20 | 7 | 200ATMZ095 | | | | | | |
| | | | | 072 | 20 | 7 | 200ATMK095 | 200RNDK095 | | 200VXLHK095 | | 200SFHK095 | |
| | | | | 081 | 23 | 7 | | | | | | | |
| | | | | 084 | 24 | 7 | | 240RNDK095 | | | | | |
| 3/8 | | | | | | | | | | | | | |
| | .058 | **AdvanceCut** 73V | **PowerCut** 73EXL, LGX, LPX **VersaCut** 73DPX | 059 | 16 | 7 | | | | | | | |
| | | | | 060 | 16 | 7 | 168ATMK095 | 168RNDK095 | | 168VXLHK095 | | 168SFHK095 | |
| | | | | 064 | 18 | 7 | | 188RNDZ095 | | ‡*188SLHK095* 188VXLHK095 | | | |
| | | | | 068 | 18 | 7 | 188ATMK095 | 188RNDK095 | | ‡39450 | | 188SFHK095 | |
| | | | | 072 | 20 | 7 | 208ATMK095 | 208RNDK095 | | 208VXLHK095 | | 208SFHK095 | |
| | | | | 084 | 24 | 7 | | 248RNDK095 | | | | | |
| | | | | 093 | 28 | 7 | | | | | | | |

‡ Correct fit-up for these Oregon guide bars required that a 6-digit part number be used in addition to the usual 10-digit part number. *188SLHK095* is designed for 3/8" – 64 DL • 39450 is for designed for 3/8" – 68 DL

▲ See our guides for chainsaws with a **green triangle** on pages FOR 2–3

▲ See our guides for chainsaws with a **yellow triangle** on pages FOR 2–3

Saw chain complies with low kickback performance requirements (FOR 2–3)

Saw chain does not comply with low kickback performance requirements (FOR 2–3)

For information on our PowerSharp Kits see pages FOR 136–137

For Bar & Chain Combos see pages FOR 100–101

Part numbers printed in *red italics* have been obsoleted. Contact your authorized Oregon distributor for availability.

# Guide Bar & Saw Chain Applications



| Saw Chain | | | | | | Guide Bars | | | | | | | |
|---|---|---|---|---|---|---|---|---|---|---|---|---|---|
| | | | | | | DuraCut™ AT | PowerCut™ RN RW GN PM | SpeedCut™ TXL | VersaCut™ VXL | ControlCut™ PXL | AdvanceCut™ SF SX PX GD MLB | Single Rivet SD DG MLE |
| Pitch | Gauge | Chain Type | Drive Links | Bar Length | Drive Teeth | Armor Tip | PowerMatch® | Pro-Lite® MG MP | Pro-Lite® SLG SLH GL GP SP | Pro-Lite® SLB | Pro-Am® | DoubleGuard® |

## Jonsered

**2014, 2016, 2036, 2036 Turbo, 2040, 2040 Turbo, 2041, 2045, 2141, CS 2141; Some saws may take 3/8" pitch chain, see other applications.**

| | | | | | | | | | | | | | |
|---|---|---|---|---|---|---|---|---|---|---|---|---|---|
| .325 | .050 | ControlCut 20BPX | PowerCut 20LPX | 066 | 16 | 7 | | 160RNBK041 | | *160GLGK041* | | 160PXBK041 | |
| | | | | 072 | 18 | 7 | | 180RNBK041 | | 180VXLGK041<br>*180GLGK041* | | 180PXBK041 | |
| | | | | 078 | 20 | 8 | | *200RNBK041* | | | | 200PXBK041 | |
| | .058 | ControlCut 21BPX | PowerCut 21LPX | 064 | 15 | 8 | | | | *158SLGK041*<br>158VXLGK041 | | | |
| | | | | 064 | 15 | 7 | | | | | 158PXLBK041 | | |
| | | | | 066 | 16 | 7 | | | | 168VXLGK041 | | | |
| | | | | 072 | 18 | 7 | | | | 188VXLGK041 | | | |
| | Intenz® ** | | | | | | | | | | | | |
| | .050 | ControlCut 20BPX | PowerCut 20LPX | 066 | 16 | 7 | | | | | | | |
| | | | | 072 | 18 | 7 | | | | | | *180PXBT041* | |
| | | | | 078 | 20 | 8 | | | | | | 200PXBT041 | |
| | Narrow Kerf | | | | | | | | | | | | |
| | .050 | *95VPX* | SpeedCut 95TXL | 056 | 13 | 7 | | | | | | 130MLBK041 | |
| | | | | 064 | 15 | 7 | | | | | | 150MLBK041 | |
| | | | | 066 | 16 | 7 | | | 160TXLGK041 | | | 160MLBK041 | |
| | | | | 072 | 18 | 7 | | | 180TXLGK041 | | | 180MLBK041 | |

## Jonsered

**625, 630, 630 Super, 630 West Coast, 2065, 2071, 2077, 2165, 2171, CS 2165, CS 2166, CS 2171, CS 2171 WH, CS 2172, CS 2172 WH, CS 2186, CS 2186 WH, CS 2188...**

| | | | | | | | | | | | | | |
|---|---|---|---|---|---|---|---|---|---|---|---|---|---|
| 3/8 | .050 | AdvanceCut 72V | PowerCut 72EXL, LGX, LPX<br>VersaCut 72DPX | 060 | 16 | 8 | | 160RNDD009 | | 160VXLHD009 | | | |
| | | | | 068 | 18 | 8 | *180ATMD009* | 180RNDD009 | | *180SLHD009*<br>180VXLHD009 | | | |
| | | | | 072 | 20 | 8 | 200ATMD009 | 200RNDD009 | | 200VXLHD009 | | 200SFHD009 | |
| | | | | 076 | 22 | 7 | | | | | | | |
| | | | | 084 | 24 | 8 | 240ATMD009 | 240RNDD009 | | | | 240SFHD009 | |
| | | | | 093 | 28 | 7 | | 280RNDD009<br>280RWDD009 | | | | | |
| | .058 | AdvanceCut 73V | PowerCut 73EXL, LGX, LPX<br>VersaCut 73DPX | 052 | 13 | 8 | | 138RNDD009 | | *138SLHD009* | | | |
| | | | | 056 | 15 | 8 | | | | 158VXLHD009 | | | |
| | | | | 060 | 16 | 8 | 168ATMD009 | 168RNDD009 | | 168VXLHD009 | | 168SFHD009 | |

See page FOR 142 for saw chain sharpening tools

* See page FOR 4 for important information on Guard Mate bar-nose tip guards

** See page FOR 4 for important information on Intenz guide bars.

† ANSI B175.1-2012 and CSA Standard Z62.3 regarding reduced kickback does not apply to pole saws or pruners

For the most current fit-up information visit **OregonProducts.com**

# Guide Bar & Saw Chain Applications



**Saw Chain** | **Guide Bars**

| Pitch | Gauge | Chain Type | Drive Links | Bar Length | Drive Teeth | DuraCut™ AT Armor Tip | PowerCut™ RN RW GN PM PowerMatch® | SpeedCut™ TXL MG MP Pro-Lite® | VersaCut™ VXL SLG SLH GL GP SP Pro-Lite® | ControlCut™ PXL SLB Pro-Lite® | AdvanceCut™ SF SX PX GD MLB Pro-Am® | Single Rivet SD DG MLE DoubleGuard® |
|---|---|---|---|---|---|---|---|---|---|---|---|---|
| **Jonsered** ▲ | | | | | | | | | | | | |
| **...625, 630, 630 Super, 630 West Coast, 2065, 2071, 2077, 2165, 2171, CS 2165, CS 2166, CS 2171, CS 2171 WH, CS 2172, CS 2172 WH, CS 2186, CS 2186 WH, CS 2188** | | | | | | | | | | | | |
| 3/8 | .058 | **AdvanceCut** 73V | 068 | 18 | 8 | 188ATMD009 | 188RNDD009 | | 188VXLHD009 | | 188SFHD009 | |
| | | | 072 | 20 | 8 | 208ATMD009 | 208RNDD009 | | *208SLHD009* 208VXLHD009 | | 208SFHD009 | |
| | | | 076 | 22 | 7 | | 228RNDD009 | | | | | |
| | | | 084 | 24 | 7 | 248ATMD009 | 248RNDD009 | | | | 248SFHD009 | |
| | | | 089 | 26 | 8 | | 268RNDD009 | | | | | |
| | | | 092 | 28 | 7 | 288ATMD009 | 288RNDD009 | | | | | |
| | | | 102 | 30 | 8 | | 308RNDD009 | | | | | |
| | | | 105 | 32 | 8 | | *328RNDD009* | | | | | |
| | | | 115 | 36 | 7 | | *368RNDD009* | | | | | |
| | | | 119 | 37 | 7 | | 378PMDD009 | | | | | |
| **60, 61, 62, 621, 2350** | | | | | | | | | | | | |
| 3/8 | .050 | **AdvanceCut** 72V | 060 | 16 | 7 | | *160RNDD196* | | *160GLHD196* | | 160GDDD096 | |
| | | | 064 | 18 | 8 | | | | | | | |
| | | | 066 | 18 | 7 | | | | | | | |
| | | | 070 | 20 | 7 | | *200GNDD196* 200RNDD196 | | *200GLHD196* | | 200GDDD096 | |
| | | | 081 | 24 | 7 | | 240RNDD196 | | | | | |
| | | | 093 | 27 | 7 | | *270GNDD196* | | | | | |
| | .058 | **AdvanceCut** 73V | 060 | 16 | 8 | | | | *168SLHD196* | | | |
| | | | 068 | 18 | 8 | | | | | | | |
| | | | 072 | 20 | 8 | | 208RNDD024 | | 208VXLHD024 | | | |
| | .063 | **AdvanceCut** 75V | 079 | 21 | 7 | 213ATMD196 | | | | | | |
| **Ripping Mill** | | | | | | | | | | | | |
| .325 | .050 | | 095 | 24 | 7 | | | | | | | |
| **66, 70, 75, 77, 80, 81, 90, 110, 111, 601, 751, 801, 820, 830, 910, 920, 930, 939, 941, 1020; Some saws may take .404" pitch chain, see other applications...** | | | | | | | | | | | | |
| 3/8 | .050 | **AdvanceCut** 72V | 060 | 16 | 7 | | *160RNDD196* | | *160GLHD196* | | 160GDDD096 | |
| | | | 064 | 18 | 8 | | | | | | | |
| | | | 066 | 18 | 7 | | | | | | | |
| | | | 070 | 20 | 7 | | *200GNDD196* 200RNDD196 | | *200GLHD196* | | 200GDDD096 | |
| | | | 081 | 24 | 7 | | 240RNDD196 | | | | | |
| | | | 093 | 27 | 7 | | *270GNDD196* | | | | | |

**PowerCut** 73EXL, LGX, LPX **VersaCut** 73DPX

**PowerCut** 72EXL, LGX, LPX **VersaCut** 72DPX

**PowerCut** 75EXL, LGX, LPX **VersaCut** 75DPX

▲ See our guides for chainsaws with a **green triangle** on pages FOR 2–3

▲ See our guides for chainsaws with a **yellow triangle** on pages FOR 2–3

Saw chain complies with low kickback performance requirements (FOR 2–3)

Saw chain does not comply with low kickback performance requirements (FOR 2–3)

For information on our PowerSharp Kits see pages FOR 136–137

For Bar & Chain Combos see pages FOR 100–101

Part numbers printed in *red italics* have been obsoleted. Contact your authorized Oregon distributor for availability.

# Guide Bar & Saw Chain Applications



| Saw Chain | | | | | | Guide Bars | | | | | | |
|---|---|---|---|---|---|---|---|---|---|---|---|---|
| | | | | | | DuraCut™ AT | PowerCut™ RN RW GN PM | SpeedCut™ TXL | VersaCut™ VXL | ControlCut™ PXL | AdvanceCut™ SF SX PX GD MLB | Single Rivet SD DG MLE |
| Pitch | Gauge | Chain Type | Drive Links | Bar Length | Drive Teeth | Armor Tip | PowerMatch® | Pro-Lite® MG MP | Pro-Lite® SLG SLH GL GP SP | Pro-Lite® SLB | Pro-Am® | DoubleGuard® |

## Jonsered

**...66, 70, 75, 77, 80, 81, 90, 110, 111, 601, 751, 801, 820, 830, 910, 920, 930, 939, 941, 1020; Some saws may take .404" pitch chain, see other applications.**

| Pitch | Gauge | Chain Type | Chain Type | Drive Links | Bar Length | Drive Teeth | Armor Tip | PowerMatch® | Pro-Lite® MG MP | Pro-Lite® SLG SLH GL GP SP | Pro-Lite® SLB | Pro-Am® | DoubleGuard® |
|---|---|---|---|---|---|---|---|---|---|---|---|---|---|
| 3/8 | .058 | **AdvanceCut** 73V | **PowerCut** 73EXL, LGX, LPX **VersaCut** 73DPX | 060 | 16 | 8 | | | | *168SLHD024* | | | |
| | | | | 068 | 18 | 8 | | | | | | | |
| | | | | 072 | 20 | 8 | | 208RNDD024 | | 208VXLHD024 | | | |
| | .063 | **AdvanceCut** 75V | **PowerCut** 75EXL, LGX, LPX **VersaCut** 75DPX | 079 | 21 | 7 | 213ATMD196 | | | | | | |
| | | | | 105 | 32 | 7 | | | | | | | |
| | | | | 117 | 36 | 7 | | | | | | | |

**670, 670 West Coast, 2083, 2083II, 2094, 2095; Some saws may take .404" pitch chain, see other applications...**

| Pitch | Gauge | Chain Type | Chain Type | Drive Links | Bar Length | Drive Teeth | Armor Tip | PowerMatch® | Pro-Lite® MG MP | Pro-Lite® SLG SLH GL GP SP | Pro-Lite® SLB | Pro-Am® | DoubleGuard® |
|---|---|---|---|---|---|---|---|---|---|---|---|---|---|
| | .050 | **AdvanceCut** 72V | **PowerCut** 72EXL, LGX, LPX **VersaCut** 72DPX | 060 | 16 | 8 | | 160RNDD009 | | 160VXLHD009 | | | |
| | | | | 068 | 18 | 8 | *180ATMD009* | 180RNDD009 | | *180SLHD009* 180VXLHD009 | | | |
| | | | | 072 | 20 | 8 | 200ATMD009 | 200RNDD009 | | 200VXLHD009 | | 200SFHD009 | |
| | | | | 076 | 22 | 7 | | | | | | | |
| | | | | 084 | 24 | 8 | 240ATMD009 | 240RNDD009 | | | | 240SFHD009 | |
| | | | | 092 | 28 | 7 | | 280RNDD009 280RWDD009 | | | | | |
| | | | | 098 | 30 | 7 | | 300RNDD009 | | | | | |
| | | | | 105 | 32 | 7 | | 320RNDD009 320RWDD009 | | | | | |
| 3/8 | .058 | **AdvanceCut** 73V | **PowerCut** 73EXL, LGX, LPX **VersaCut** 73DPX | 052 | 13 | 8 | | 138RNDD009 | | *138SLHD009* | | | |
| | | | | 056 | 15 | 8 | | | | 158VXLHD009 | | | |
| | | | | 060 | 16 | 8 | 168ATMD009 | 168RNDD009 | | 168VXLHD009 | | 168SFHD009 | |
| | | | | 068 | 18 | 8 | 188ATMD009 | 188RNDD009 | | 188VXLHD009 | | 188SFHD009 | |
| | | | | 072 | 20 | 8 | 208ATMD009 | 208RNDD009 | | *208SLHD009* 208VXLHD009 | | 208SFHD009 | |
| | | | | 076 | 22 | 7 | | 228RNDD009 | | | | | |
| | | | | 084 | 24 | 7 | 248ATMD009 | 248RNDD009 | | | | 248SFHD009 | |
| | | | | 089 | 26 | 8 | | 268RNDD009 | | | | | |
| | | | | 092 | 28 | 7 | 288ATMD009 | 288RNDD009 | | | | | |
| | | | | 102 | 30 | 8 | | 308RNDD009 | | | | | |
| | | | | 110 | 33 | 7 | | 338RWDD009 338PMDD009 | | | | | |
| | | | | 115 | 36 | 7 | | *368RNDD009* | | | | | |
| | | | | 119 | 37 | 7 | | 378RWDD009 378PMDD009 | | | | | |

See page FOR 142 for saw chain sharpening tools

* See page FOR 4 for important information on Guard Mate bar-nose tip guards

** See page FOR 4 for important information on Intenz guide bars.

† ANSI B175.1-2012 and CSA Standard Z62.3 regarding reduced kickback does not apply to pole saws or pruners

For the most current fit-up information visit **OregonProducts.com**

# Guide Bar & Saw Chain Applications



| Saw Chain | | | | Guide Bars | | | | | | | | | |
|---|---|---|---|---|---|---|---|---|---|---|---|---|---|
| | | | | | | DuraCut™ AT | PowerCut™ RN RW GN PM | SpeedCut™ TXL | VersaCut™ VXL | ControlCut™ PXL | AdvanceCut™ SF SX PX GD MLB | Single Rivet SD DG MLE |
| Pitch | Gauge | Chain Type | Drive Links | Bar Length | Drive Teeth | Armor Tip | PowerMatch® | Pro-Lite® MG MP | Pro-Lite® SLG SLH GL GP SP | Pro-Lite® SLB | Pro-Am® | DoubleGuard® |

## Jonsered

| ...670, 670 West Coast, 2083, 2083II, 2094, 2095; Some saws may take .404" pitch chain, see other applications | | | | | | | | | | | | |
|---|---|---|---|---|---|---|---|---|---|---|---|---|
| 3/8 | .063 | **AdvanceCut** 75V | **PowerCut** 75EXL, LGX, LPX **VersaCut** 75DPX | 072 | 20 | 7 | 203ATMD009 | 203RNDD009 | | | | |
| | | | | 084 | 24 | 7 | 243ATMD009 | 243RNDD009 | | | | |
| | | | | 092 | 28 | 7 | | 283RNDD009 283RWDD009 | | | | |
| | | | | 098 | 30 | 7 | | | | | | |
| | | | | 105 | 32 | 7 | | 323RNDD009 | | | | |
| | | | | 105 | 32 | 7 | | 323RWDD009 | | | | |
| | | | | 110 | 34 | 7 | | 343RNDD009 | | | | |
| | | | | 115 | 36 | 7 | | 363RNDD009 363RWDD009 | | | | |
| | | | | 119 | 37 | 7 | | | | | | |
| | | | | 135 | 42 | 7 | | 423RNDD009 | | | | |
| **66, 70, 75, 77, 80, 81, 90, 110, 111, 490, 601, 751, 801, 820, 830, 910, 920, 930, 939, 1020; Some saws may take 3/8" pitch chain, see other applications.** | | | | | | | | | | | | |
| .404 | .063 | | **PowerCut** 59L, 68LX **VersaCut** 27X | 106 | 36 | 7 | | | | | | |
| **670, 670 West Coast, 2077, 2083, 2094, 2095; Some saws may take 3/8" pitch chain, see other applications.** | | | | | | | | | | | | |
| .404 | .063 | | **PowerCut** 59L, 68LX **VersaCut** 27X | 065 | 20 | 7 | | | | | | |

## Kobalt

| KPS 80-06 | | | | | | | | | | | | |
|---|---|---|---|---|---|---|---|---|---|---|---|---|
| 3/8 low profile | .050 | **ControlCut** 91PXL **AdvanceCut** 91PX | **VersaCut** 91VXL | 033 | 8 | | | | | | | |
| **KCS 120-06, KCS 120-07** | | | | | | | | | | | | |
| 3/8 low profile | .050 | **ControlCut** 91PXL **AdvanceCut** 91PX | **VersaCut** 91VXL | 045 | 12 | 6 | | | *120SPEA041* | | 120SXEA041 | 120SDEA041 |
| **KCS 180B-06** | | | | | | | | | | | | |
| 3/8 low profile | .050 | **ControlCut** 91PXL **AdvanceCut** 91PX | **VersaCut** 91VXL | 062 | 18 | 6 | | | | | *180SXEA041* | 180SDEA041 |

See our guides for chainsaws with a **green triangle** on pages FOR 2–3

See our guides for chainsaws with a **yellow triangle** on pages FOR 2–3

Saw chain complies with low kickback performance requirements (FOR 2–3)

Saw chain does not comply with low kickback performance requirements (FOR 2–3)

For information on our PowerSharp Kits see pages FOR 136–137

For Bar & Chain Combos see pages FOR 100–101

Part numbers printed in *red italics* have been obsoleted. Contact your authorized Oregon distributor for availability.

# Guide Bar & Saw Chain Applications



| Saw Chain | | | | Guide Bars | | | | | | | | | |
|---|---|---|---|---|---|---|---|---|---|---|---|---|---|
| | | | | | | DuraCut™ AT | PowerCut™ RN RW GN PM | SpeedCut™ TXL | VersaCut™ VXL | ControlCut™ PXL | AdvanceCut™ SF SX PX GD MLB | Single Rivet SD DG MLE |
| Pitch | Gauge | Chain Type | Drive Links | Bar Length | Drive Teeth | Armor Tip | PowerMatch® | Pro-Lite® MG MP | Pro-Lite® SLG SLH GL GP SP | Pro-Lite® SLB | Pro-Am® | DoubleGuard® |

## Makita

**5012B, 5014NB, 5016NB, DCS 34, DCS 330S, DCS 330TH, DCS 340, DCS 341, DCS 390, DCS 390S, DCS 400, DCS 401, DCS3416, EA3200SRBB, EA3201S35B, EA3201S40B, EA3501S40B, UC3030A, UC3050A, UC3051A, UC3500, UC3530A, UC3550A, UC3551A, UC4000, UC4030A, UC4050A, UC4051A, UC4550A, UC4551A, XCU03, XCU04** — PowerSharp® Compatible

| Pitch | Gauge | Chain Type | Drive Links | Bar Length | Drive Teeth | Armor Tip | PowerMatch® | Pro-Lite® MG MP | Pro-Lite® SLG SLH GL GP SP | Pro-Lite® SLB | Pro-Am® | DoubleGuard® |
|---|---|---|---|---|---|---|---|---|---|---|---|---|
| | .050 | ControlCut 91PXL AdvanceCut 91PX | 045 | 12 | 6 | | | | *120SPEA041* | | 120SXEA041 | 120SDEA041 |
| | | VersaCut 91VXL | 052 | 14 | 6 | | | | | | 140SXEA041 | 140SDEA041 |
| | | | 056 | 16 | 6 | | | | | | 160SXEA041 | 160SDEA041 |
| | | | 062 | 18 | 6 | | | | | | | 180SDEA041 |
| | Intenz® ** | | | | | | | | | | | |
| 3/8 low profile | .050 | ControlCut 91PXL AdvanceCut 91PX | 045 | 12 | 6 | | | | | | | |
| | | VersaCut 91VXL | 052 | 14 | 6 | | | | *140SPET041* | | | 140SDET041 |
| | | | 056 | 16 | 6 | | | | *160SPET041* | | | 160SDET041 |
| | | | 062 | 18 | 6 | | | | | | | 180SDET041 |
| | .043 | AdvanceCut 90PX | 045 | 12 | 6 | | | | | | | 124MLEA041 |
| | | | 052 | 14 | 6 | | | | | | | 144MLEA041 |
| | | | 056 | 16 | 6 | | | | | | | *164MLEA041* |
| **EA4300F, EA4301F** | | | | | | | | | | | | |
| 3/8 low profile | .050 | ControlCut 91PXL AdvanceCut 91PX | 052 | 14 | 6 | | | | | | 140SXEA041 | 140SDEA041 |
| | | VersaCut 91VXL | 056 | 16 | 6 | | | | | | 160SXEA041 | 160SDEA041 |
| | Narrow Kerf | | | | | | | | | | | |
| .325 | .050 | *95VPX* | 056 | 13 | 7 | | | | | | 130MLBK041 | |
| | | SpeedCut 95TXL | 064 | 15 | 7 | | | | | | 150MLBK041 | |
| | | | 072 | 18 | 7 | | | 180TXLGK041 180TXLBK041 | | | 180MLBK041 | |
| **HCU02C1, HCU02ZX2, XCU02** | | | | | | | | | | | | |
| 3/8 low profile | .043 | AdvanceCut 90PX | 046 | 12 | 6 | Original Equipment Guide Bar | | | | | | |
| | | | 045 | 12 | 6 | | | | | | | 124MLEA041 |
| **DCS 430, DCS 431, DCS 460, DCS 510, DCS 5121, DCS 520i, DCS 540, DCS 5200i, EA5000P53G, EA6100P53G, EA6101P53G...** | | | | | | | | | | | | |
| | .050 | ControlCut 20BPX | 066 | 16 | 7 | *160ATMZ095* | 160RNBK095 | | 160SLGXK095 | | *160PXBK095* | |
| | | PowerCut 20LPX | 072 | 18 | 7 | *180ATMZ095* | | | | | 180PXBK095 | |
| | | | | | 8 | | | | *180SLGK095* 180VXLGK095 | | | |
| | | | 078 | 20 | 8 | 200ATMZ095 | 200RNBK095 | | *200SLGK095* 200VXLGK095 | | 200PXBK095 | |
| .325 | .058 | ControlCut 21BPX | 056 | 13 | 7 | | | | | *138SLBK095* 138PXLBK095 | | |
| | | PowerCut 21LPX | 064 | 15 | 8 | | 158RNBK095 | | 158VXLGK095 | 158PXLBK095 | | |
| | | | 066 | 16 | 7 | | 168RNBK095 | | 168VXLGK095 | *168SLBK095* 168PXLBK095 | 168VXLGK095 168PXBK095 | |
| | | | 072 | 18 | 8 | | 188RNBK095 | | *188SLGK095* 188VXLGK095 | 188PXLBK095 | 188VXLGK095 188PXBK095 | |
| | | | 078 | 20 | 7 | | 208RNBK095 | | *208SLGK095* 208VXLGK095 | | 208PXBK095 | |

See page FOR 142 for saw chain sharpening tools

* See page FOR 4 for important information on Guard Mate bar-nose tip guards

** See page FOR 4 for important information on Intenz guide bars.

† ANSI B175.1-2012 and CSA Standard Z62.3 regarding reduced kickback does not apply to pole saws or pruners

For the most current fit-up information visit **OregonProducts.com**

# Guide Bar & Saw Chain Applications



**Saw Chain** | **Guide Bars**

| Pitch | Gauge | Chain Type | Drive Links | Bar Length | Drive Teeth | DuraCut™ AT | PowerCut™ RN RW GN PM | SpeedCut™ TXL | VersaCut™ VXL | ControlCut™ PXL | AdvanceCut™ SF SX PX GD MLB | Single Rivet SD DG MLE |
|---|---|---|---|---|---|---|---|---|---|---|---|---|
| | | | | | | Armor Tip | PowerMatch® | Pro-Lite® MG MP | Pro-Lite® SLG SLH GL GP SP | Pro-Lite® SLB | Pro-Am® | DoubleGuard® |

## Makita

**...DCS 430, DCS 431, DCS 460, DCS 510, DCS 5121, DCS 520i, DCS 540, DCS 5200i, EA5000P53G, EA6100P53G, EA6101P53G**

Narrow Kerf

| Pitch | Gauge | Chain Type | | Drive Links | Bar Length | Drive Teeth | Armor Tip | PowerMatch® | Pro-Lite® MG MP | Pro-Lite® SLG SLH GL GP SP | Pro-Lite® SLB | Pro-Am® | DoubleGuard® |
|---|---|---|---|---|---|---|---|---|---|---|---|---|---|
| .325 | .050 | *95VPX* | **SpeedCut** 95TXL | 056 | 13 | 7 | | | *130MPBK095* 130TXLBK095 | | | 130MLBK095 | |
| | | | | 064 | 15 | 7 | | | 150TXLBK095 | | | 150MLBK095 | |
| | | | | 066 | 16 | 7 | | | *160MPBK095* 160TXLBK095 | | | 160MLBK095 | |
| | | | | 072 | 18 | 7 | | | 180TXLBK095 | | | 180MLBK095 | |
| | | | | 078 | 20 | 7 | | | 200TXLBK095 | | | | |
| 3/8 | .050 | **AdvanceCut** 72V | **PowerCut** 72EXL, LGX, LPX **VersaCut** 72DPX | 059 | 16 | 7 | | | | | | 160PXDK095 | |
| | | | | 060 | 16 | 7 | 160ATMK095 | 160RNDK095 | | 160VXLHK095 | | 160SFHK095 | |
| | | | | 064 | 18 | 7 | 180ATMZ095 | | | | | | |
| | | | | 070 | 20 | 7 | 200ATMZ095 | | | | | | |
| | | | | 072 | 20 | 7 | 200ATMK095 | 200RNDK095 | | 200VXLHK095 | | 200SFHK095 | |
| | | | | 081 | 23 | 7 | | | | | | | |
| | .058 | **AdvanceCut** 73V | **PowerCut** 73EXL, LGX, LPX **VersaCut** 73DPX | 059 | 16 | 7 | | | | | | | |
| | | | | 060 | 16 | 7 | 168ATMK095 | 168RNDK095 | | 168VXLHK095 | | 168SFHK095 | |
| | | | | 064 | 18 | 7 | | 188RNDZ095 | | *188SLHK095* 188VXLHK095 | | | |

**DCS 6000i, DCS 6800i**

| Pitch | Gauge | Chain Type | | Drive Links | Bar Length | Drive Teeth | Armor Tip | PowerMatch® | Pro-Lite® MG MP | Pro-Lite® SLG SLH GL GP SP | Pro-Lite® SLB | Pro-Am® | DoubleGuard® |
|---|---|---|---|---|---|---|---|---|---|---|---|---|---|
| 3/8 | .050 | **AdvanceCut** 72V | **PowerCut** 72EXL, LGX, LPX **VersaCut** 72DPX | 059 | 16 | 7 | *160ATMZ095* | | | | | 160PXDK095 | |
| | | | | 060 | 16 | 7 | 160ATMK095 | 160RNDK095 | | 160VXLHK095 | | 160SFHK095 | |
| | | | | 064 | 18 | 7 | 180ATMZ095 | | | | | | |
| | | | | 070 | 20 | 7 | 200ATMZ095 | | | | | | |
| | | | | 072 | 20 | 7 | 200ATMK095 | 200RNDK095 | | 200VXLHK095 | | 200SFHK095 | |
| | | | | 081 | 23 | 7 | | | | | | | |
| | .058 | **AdvanceCut** 73V | **PowerCut** 73EXL, LGX, LPX **VersaCut** 73DPX | 059 | 16 | 7 | | | | | | | |
| | | | | 060 | 16 | 7 | 168ATMK095 | 168RNDK095 | | 168VXLHK095 | | 168SFHK095 | |
| | | | | 064 | 18 | 7 | | 188RNDZ095 | | *188SLHK095* 188VXLHK095 | | | |

See our guides for chainsaws with a **green triangle** on pages FOR 2–3

See our guides for chainsaws with a **yellow triangle** on pages FOR 2–3

Saw chain complies with low kickback performance requirements (FOR 2–3)

Saw chain does not comply with low kickback performance requirements (FOR 2–3)

For information on our PowerSharp Kits see pages FOR 136–137

For Bar & Chain Combos see pages FOR 100–101

Part numbers printed in *red italics* have been obsoleted. Contact your authorized Oregon distributor for availability.

# Guide Bar & Saw Chain Applications



**Saw Chain** | **Guide Bars**

| Pitch | Gauge | Chain Type | Drive Links | Bar Length | Drive Teeth | DuraCut™ Armor Tip | PowerCut™ PowerMatch® | SpeedCut™ Pro-Lite® MG MP | VersaCut™ Pro-Lite® SLG SLH GL GP SP | ControlCut™ Pro-Lite® SLB | AdvanceCut™ Pro-Am® SF SX PX GD MLB | Single Rivet DoubleGuard® SD DG MLE |
|---|---|---|---|---|---|---|---|---|---|---|---|---|
| **Makita** | | | | | | | | | | | | |
| **DCS 6400, DCS 6401, DCS 6420, DCS 6421, DCS 7300, DCS 7301, DCS 7900, DCS 7901, DCS 9000, DCS 9010 FL; Some saws may take .404" pitch chain, see other applications...** | | | | | | | | | | | | |
| 3/8 | .050 | **AdvanceCut** 72V | **PowerCut** 72EXL, LGX, LPX **VersaCut** 72DPX | 060 | 16 | 8 | | 160RNDD009 | | 160VXLHD009 | | |
| | | | | 068 | 18 | 8 | *180ATMD009* | 180RNDD009 | | *180SLHD009* 180VXLHD009 | | |
| | | | | 072 | 20 | 8 | 200ATMD009 | 200RNDD009 | | 200VXLHD009 | 200SFHD009 | |
| | | | | 076 | 22 | 7 | | | | | | |
| | | | | 084 | 24 | 8 | 240ATMD009 | 240RNDD009 | | | 240SFHD009 | |
| | | | | 093 | 28 | 7 | | 280RNDD009 | | | | |
| | | | | 093 | 28 | 7 | | 280RWDD009 | | | | |
| | | | | 098 | 30 | 7 | | 300RNDD009 | | | | |
| | | | | 105 | 32 | 7 | | 320RNDD009 | | | | |
| | | | | 105 | 32 | 7 | | 320RWDD009 | | | | |
| | .058 | **AdvanceCut** 73V | **PowerCut** 73EXL, LGX, LPX **VersaCut** 73DPX | 052 | 13 | 8 | | 138RNDD009 | | *138SLHD009* | | |
| | | | | 056 | 15 | 8 | | | | 158VXLHD009 | | |
| | | | | 060 | 16 | 8 | 168ATMD009 | 168RNDD009 | | 168VXLHD009 | 168SFHD009 | |
| | | | | 068 | 18 | 8 | 188ATMD009 | 188RNDD009 | | 188VXLHD009 | 188SFHD009 | |
| | | | | 072 | 20 | 8 | 208ATMD009 | 208RNDD009 | | *208SLHD009* 208VXLHD009 | 208SFHD009 | |
| | | | | 076 | 22 | 7 | | 228RNDD009 | | | | |
| | | | | 084 | 24 | 7 | 248ATMD009 | 248RNDD009 | | | 248SFHD009 | |
| | | | | 089 | 26 | 8 | | 268RNDD009 | | | | |
| | | | | 092 | 28 | 7 | 288ATMD009 | 288RNDD009 | | | | |
| | | | | 102 | 30 | 8 | | 308RNDD009 | | | | |
| | | | | 105 | 32 | 8 | | *328RNDD009* | | | | |
| | | | | 110 | 33 | 7 | | 338RWDD009 338PMDD009 | | | | |
| | | | | 115 | 36 | 7 | | *368RNDD009* | | | | |
| | | | | 119 | 37 | 7 | | 378RWDD009 378PMDD009 | | | | |

See page FOR 142 for saw chain sharpening tools

* See page FOR 4 for important information on Guard Mate bar-nose tip guards

** See page FOR 4 for important information on Intenz guide bars.

† ANSI B175.1-2012 and CSA Standard Z62.3 regarding reduced kickback does not apply to pole saws or pruners

For the most current fit-up information visit **OregonProducts.com**

# Guide Bar & Saw Chain Applications



| Saw Chain | | | | Guide Bars | | | | | | | | | |
|---|---|---|---|---|---|---|---|---|---|---|---|---|---|
| | | | | | | DuraCut™ AT | PowerCut™ RN RW GN PM | SpeedCut™ TXL | VersaCut™ VXL | ControlCut™ PXL | AdvanceCut™ SF SX PX GD MLB | Single Rivet SD DG MLE |
| Pitch | Gauge | Chain Type | Drive Links | Bar Length | Drive Teeth | Armor Tip | PowerMatch® | Pro-Lite® MG MP | Pro-Lite® SLG SLH GL GP SP | Pro-Lite® SLB | Pro-Am® | DoubleGuard® |

## Makita

| | | | | | | | | | | | | | |
|---|---|---|---|---|---|---|---|---|---|---|---|---|---|
| **...DCS 6400, DCS 6401, DCS 6420, DCS 6421, DCS 7300, DCS 7301, DCS 7900, DCS 7901, DCS 9000, DCS 9010 FL; Some saws may take .404" pitch chain, see other applications.** | | | | | | | | | | | | | |
| 3/8 | .063 | **AdvanceCut** 75V | **PowerCut** 75EXL, LGX, LPX **VersaCut** 75DPX | 072 | 20 | 7 | 203ATMD009 | 203RNDD009 | | | | | |
| | | | | 084 | 24 | 7 | 243ATMD009 | 243RNDD009 | | | | | |
| | | | | 093 | 28 | 7 | | 283RNDD009 283RWDD009 | | | | | |
| | | | | 098 | 30 | 7 | | | | | | | |
| | | | | 105 | 32 | 7 | | 323RNDD009 323RWDD009 | | | | | |
| | | | | 110 | 34 | 7 | | 343RNDD009 | | | | | |
| | | | | 115 | 36 | 7 | | 363RNDD009 363RWDD009 | | | | | |
| | | | | 119 | 37 | 7 | | | | | | | |
| | | | | 135 | 42 | 7 | | 423RNDD009 | | | | | |
| **DCS 9000, DCS 9010FL; Some saws may take 3/8" pitch chain, see other applications.** | | | | | | | | | | | | | |
| .404 | .063 | | **PowerCut** 59L, 68LX **VersaCut** 27X | 065 | 20 | 7 | | | | | | | |

## Maruyama

| | | | | | | | | | | | | | |
|---|---|---|---|---|---|---|---|---|---|---|---|---|---|
| **Pole Saw Models MC-PL10, MC-PS10, P23-10, MC-PS/PL** | | | | | | | | | | | | | |
| 3/8 low profile | .050 | **ControlCut** 91PXL **AdvanceCut** 91PX | **VersaCut** 91VXL | 040 | 10 | 7 | | | | | | | 100SDEA218 |
| **MCV31R, MCV31T** | | | | | | | | | | | | | |
| 3/8 low profile | .050 | **ControlCut** 91PXL **AdvanceCut** 91PX | **VersaCut** 91VXL | 040 | 10 | 6 | | | | | | | 100SDEA041 |
| | | | | 045 | 12 | 6 | | | | | | 120SXEA041 | 120SDEA041 |
| | | | | 052 | 14 | 6 | | | | | | 140SXEA041 | 140SDEA041 |
| **MCV51R** | | | | | | | | | | | | | |
| **.325** | .050 | **ControlCut** 20BPX | **PowerCut** 20LPX | 072 | 18 | 7 | 180ATMZ095 | | | 180VXLGK095 | | 180PXBK095 | |
| | | | | 078 | 20 | 7 | 200ATMZ095 | 200RNBK095 | | 200VXLGK095 | | 200PXBK095 | |
| 3/8 | .050 | **AdvanceCut** 72V | **PowerCut** 72EXL, LGX, LPX **VersaCut** 72DPX | 068 | 18 | 7 | | 180RNDK095 | | 180VXLHK095 | | 180SFHK095 | |
| | | | | 072 | 20 | 7 | 200ATMK095 | 200RNDK095 | | 200VXLHK095 | | 200SFHK095 | |
| **MCV42** | | | | | | | | | | | | | |
| Narrow Kerf | | | | | | | | | | | | | |
| .325 | .050 | *95VPX* | **SpeedCut** 95TXL | 064 | 15 | 7 | | | | | | 150MLBK041 | |

See our guides for chainsaws with a **green triangle** on pages FOR 2–3

See our guides for chainsaws with a **yellow triangle** on pages FOR 2–3

Saw chain complies with low kickback performance requirements (FOR 2–3)

Saw chain does not comply with low kickback performance requirements (FOR 2–3)

For information on our PowerSharp Kits see pages FOR 136–137

For Bar & Chain Combos see pages FOR 100–101

Part numbers printed in *red italics* have been obsoleted. Contact your authorized Oregon distributor for availability.

# Guide Bar & Saw Chain Applications



| Saw Chain | | | | Guide Bars | | | | | | | | | |
|---|---|---|---|---|---|---|---|---|---|---|---|---|---|
| | | | | | | DuraCut™ AT | PowerCut™ RN RW GN PM | SpeedCut™ TXL | VersaCut™ VXL | ControlCut™ PXL | AdvanceCut™ SF SX PX GD MLB | Single Rivet SD DG MLE |
| Pitch | Gauge | Chain Type | Drive Links | Bar Length | Drive Teeth | Armor Tip | PowerMatch® | Pro-Lite® MG MP | Pro-Lite® SLG SLH GL GP SP | Pro-Lite® SLB | Pro-Am® | DoubleGuard® |

## McCulloch

| Pitch | Gauge | Chain Type | Drive Links | Bar Length | Drive Teeth | Armor Tip | PowerMatch® | Pro-Lite® MG MP | Pro-Lite® SLG SLH GL GP SP | Pro-Lite® SLB | Pro-Am® | DoubleGuard® |
|---|---|---|---|---|---|---|---|---|---|---|---|---|
| **12A/S, EM 12** | | | | | | | | | | | | |
| 3/8 low profile | .050 | **ControlCut** 91PXL **AdvanceCut** 91PX / **VersaCut** 91VXL | 044 | 12 | 6 | | | | | | | 120SDEA318 |
| **14A/S, EM 16** | | | | | | | | | | | | |
| 3/8 low profile | .050 | **ControlCut** 91PXL **AdvanceCut** 91PX / **VersaCut** 91VXL | 049 | 14 | 6 | | | | | | | 140SDEA318 |
| | | | 054 | 16 | 6 | | | | | | | 160SDEA318 |
| | | | 060 | 18 | 6 | | | | | | | 180SDEA318 |
| **MCP1510 Pole Saw†, MS1015, MS1015P** | | | | | | | | | | | | |
| 3/8 low profile | .050 | **ControlCut** 91PXL **AdvanceCut** 91PX / **VersaCut** 91VXL | 039 | 10 | 5 | | | | | | | |
| | .043 | **AdvanceCut** 90PX | 039 | 10 | 5 | | | | | | | 104MLEA318 |
| **MS 1630NT, MS 1640NT** | | | | | | | | | | | | |
| 3/8 low profile | .050 | **ControlCut** 91PXL **AdvanceCut** 91PX / **VersaCut** 91VXL | 056 | 16 | 6 | | | | | | | 160SDEA318 |
| **EM 300S** | | | | | | | | | | | | |
| 3/8 low profile | .050 | **ControlCut** 91PXL **AdvanceCut** 91PX / **VersaCut** 91VXL | 050 | 14 | 5 | | | | | | | |
| | | | 055 | 16 | 5 | | | | | | | |
| **2138, 3214, 3216, 3514, 3516, 3518, 3816, 3818, 3818AV; Eager Beaver: 2010, 2014, 2016, 2116, 2318; EB 2.3, EB 6a, MacCat: 16, 18; Mac Series: 110, 115, 120, 130, 140, 155, 160S, 165, 175, 310, 320, 330, 340, 355, 365, 375, 430, 435, 440, 445, 510, 515; MCC1514, Mini Mac (All Models), MS1415, MS1420, MS1430, MS1432, MS1435, MS1455, MS1635, MS1635AV, MS1635NAV, MS1635NAVCC, MS1645, MS1838, MS1838 AVCC, MS1838AV, MS1842 AVCC, MS1846 AVCC, PM380 (1 bolt bar), PM400 (1 bolt bar), Power Mac Series: 6, 145-14, 225-16; ProMac Series: 3200, 3205, 3205-14, 3210, 3212, 3214, 3216, 3219, 3505, 3800, 3805, 3818, 3850; Silver Eagle Series: 2010, 2012, 2012S, 2014, 2014S, 2016, 2018S, 2316; SP-40, Super 16, Super 18, Titan Series: 35, 36, 37, 38, 39, 40; Wildcat** | | | | | | | | | | | | |
| 3/8 low profile | .050 | **ControlCut** 91PXL **AdvanceCut** 91PX / **VersaCut** 91VXL | 044 | 12 | 6 | | | | | | | 120SDEA318 |
| | | | 049 | 14 | 6 | | | | | | 140SXEA318 | 140SDEA318 |
| | | | 054 | 16 | 6 | | | | | | 160SXEA318 | 160SDEA318 |
| | | | 060 | 18 | 6 | | | | | | | 180SDEA318 |

See page FOR 142 for saw chain sharpening tools

* See page FOR 4 for important information on Guard Mate bar-nose tip guards

** See page FOR 4 for important information on Intenz guide bars.

† ANSI B175.1-2012 and CSA Standard Z62.3 regarding reduced kickback does not apply to pole saws or pruners

For the most current fit-up information visit **OregonProducts.com**

# Guide Bar & Saw Chain Applications



| Saw Chain | | | | Guide Bars | | | | | | | | | |
|---|---|---|---|---|---|---|---|---|---|---|---|---|---|
| | | | | | | DuraCut™ AT | PowerCut™ RN RW GN PM | SpeedCut™ TXL | VersaCut™ VXL | ControlCut™ PXL | AdvanceCut™ SF SX PX GD MLB | Single Rivet SD DG MLE |
| Pitch | Gauge | Chain Type | Drive Links | Bar Length | Drive Teeth | Armor Tip | PowerMatch® | Pro-Lite® MG MP | Pro-Lite® SLG SLH GL GP SP | Pro-Lite® SLB | Pro-Am® | DoubleGuard® |

## McCulloch

| Pitch | Gauge | Chain Type | Chain Type | Drive Links | Bar Length | Drive Teeth | Armor Tip | PowerMatch® | Pro-Lite® MG MP | Pro-Lite® SLG SLH GL GP SP | Pro-Lite® SLB | Pro-Am® | DoubleGuard® |
|---|---|---|---|---|---|---|---|---|---|---|---|---|---|
| **Mac 4600, Mac 4700, Mac 4900, Mac 5000, Mac 5500, MS 1846 AV, MS 1849 AV, MS 1850, MS 2046 AV, MS 2046 AVCC, MS 2049, MS 2049 AV, MS 2049 AVCC, MS 2050, Pro Mac 1845 AV, Pro Mac: 40, 46; Silver Eagle: 2818, 3020; Timber Bear 20 (Later models)** | | | | | | | | | | | | | |
| .325 | .050 | **ControlCut** 20BPX | **PowerCut** 20LPX | 066 | 16 | 8 | *160ATMZ095* | 160RNBK095 | | *160SLGK095* 160VXLGK095 | | *160PXBK095* | |
| | | | | 072 | 18 | 7 | *180ATMZ095* | | | | | 180PXBK095 | |
| | | | | 072 | 18 | 8 | | | | *180SLGK095* 180VXLGK095 | | | |
| | | | | 078 | 20 | 8 | 200ATMZ095 | 200RNBK095 | | *200SLGK095* 200VXLGK095 | | 200PXBK095 | |
| | .058 | **ControlCut** 21BPX | **PowerCut** 21LPX | 066 | 16 | 8 | | | | 168VXLGK095 | | 168SFGK095 | |
| | | | | 072 | 18 | 8 | | | | *188SLGK095* 188VXLGK095 | 188PXLBK095 | 188PXBK095 188SFGK095 | |
| | | | | 078 | 20 | 8 | | | | *208SLGK095* 208VXLGK095 | | 208PXBK095 208SFGK095 | |
| Narrow Kerf | | | | | | | | | | | | | |
| .325 | .050 | *95VPX* | **SpeedCut** 95TXL | 066 | 16 | 8 | | | *160MPBK095* 160TXLBK095 | | | 160MLBK095 | |
| | | | | 072 | 18 | 8 | | | 180TXLBK095 | | | 180MLBK095 | |
| | | | | 078 | 20 | 8 | | | 200TXLBK095 | | | | |
| **10E, EB12ES, EB14ES, EB16ES, MCC3516, MCC3516F, MCC4516F, MCC4516FK, MS 1630NT, MS 1640NT, MS1425, MS1630, MS1640** | | | | | | | | | | | | | |
| 3/8 low profile | .050 | **ControlCut** 91PXL **AdvanceCut** 91PX | **VersaCut** 91VXL | 039 | 10 | 6 | | | | | | | 100SDEA218 |
| | | | | 045 | 12 | 6 | | | | | | | 120SDEA318 |
| | | | | 050 | 14 | 6 | | | | | | 140SXEA318 | 140SDEA318 |
| | | | | 055 | 16 | 6 | | | | | | 160SXEA318 | 160SDEA318 |
| | | | | 060 | 18 | 6 | | | | | | | 180SDEA318 |
| **PM 380 (2-bolt bar), PM 400 (2-bolt bar)** | | | | | | | | | | | | | |
| 3/8 low profile | .050 | **ControlCut** 91PXL **AdvanceCut** 91PX | **VersaCut** 91VXL | 055 | 16 | 6 | | | | | | 160SXEA318 | 160SDEA318 |
| | | | | 060 | 18 | 6 | | | | | | | 180SDEA318 |
| **EB 428, MS 1434, MS 1436, MS 1636, MS 1639NAVCC, MS 1839, MS1842AVCC** | | | | | | | | | | | | | |
| 3/8 low profile | .050 | **ControlCut** 91PXL **AdvanceCut** 91PX | **VersaCut** 91VXL | 049 | 14 | 6 | | | | | | | *140SDEZ095* |
| | | | | 054 | 16 | 6 | | | | | | | 160SDEZ095 |
| | | | | 060 | 18 | 6 | | | | | | | 180SDEA095 |
| **EB 356A, EB 358, Mac Cat 438, MC3516, MC4218AV, MCC1435A, MCC1635A, MCC1840B, MP406, MS354A, MS 4016P, MS 4018P, MXC1840D, MXC1840DK** | | | | | | | | | | | **PowerSharp® Compatible** | | |
| 3/8 low profile | .050 | **ControlCut** 91PXL **AdvanceCut** 91PX | **VersaCut** 91VXL | 056 | 16 | 6 | | | | | | 160SXEA041 | 160SDEA041 |
| | | | | 062 | 18 | 6 | | | | | | | 180SDEA041 |
| | Intenz ** | | | | | | | | | | | | |
| | .050 | **ControlCut** 91PXL **AdvanceCut** 91PX | **VersaCut** 91VXL | 056 | 16 | 6 | | | | *160SPET041* | | | 160SDET041 |
| | | | | 062 | 18 | 6 | | | | | | | 180SDET041 |

See our guides for chainsaws with a **green triangle** on pages FOR 2–3

See our guides for chainsaws with a **yellow triangle** on pages FOR 2–3

Saw chain complies with low kickback performance requirements (FOR 2–3)

Saw chain does not comply with low kickback performance requirements (FOR 2–3)

For information on our PowerSharp Kits see pages FOR 136–137

For Bar & Chain Combos see pages FOR 100–101

Part numbers printed in *red italics* have been obsoleted. Contact your authorized Oregon distributor for availability.

# Guide Bar & Saw Chain Applications



| Saw Chain | | | | Guide Bars | | | | | | | | | |
|---|---|---|---|---|---|---|---|---|---|---|---|---|---|
| | | | | | | DuraCut™ AT | PowerCut™ RN RW GN PM | SpeedCut™ TXL | VersaCut™ VXL | ControlCut™ PXL | AdvanceCut™ SF SX PX GD MLB | Single Rivet SD DG MLE |
| Pitch | Gauge | Chain Type | Drive Links | Bar Length | Drive Teeth | Armor Tip | PowerMatch® | Pro-Lite® MG MP | Pro-Lite® SLG SLH GL GP SP | Pro-Lite® SLB | Pro-Am® | DoubleGuard® |

## McCulloch

**Mac 1-10, 2-10, 3-10, 4-10, 5-10, 6-10, 10-10, 10-10A, 55, Pro Mac 55, 60, 555, 570, 605, CP-55, Double Eagle 50, Eager Beaver 3.7, PM 605, ProMac 5700, Silver Eagle 3420, Silver Eagle 3720, SP-60, Timber Bear (Earlier models), Titan 50, Titan 57**

| Pitch | Gauge | Chain Type | Chain Type | Drive Links | Bar Length | Drive Teeth | Armor Tip | PowerMatch® | Pro-Lite® MG MP | Pro-Lite® SLG SLH GL GP SP | Pro-Lite® SLB | Pro-Am® | DoubleGuard® |
|---|---|---|---|---|---|---|---|---|---|---|---|---|---|
| 3/8 | .050 | **AdvanceCut** 72V | **PowerCut** 72EXL, LGX, LPX **VersaCut** 72DPX | 060 | 16 | 7 | *160ATMD176* | 160RNDD176 | | 160VXLHD176 | | 160PXDD176 | |
| | | | | 064 | 18 | 7 | | | | 180VXLHD176 | | | |
| | | | | 066 | 18 | 7 | | 180RNDD176 | | | | 180PXDD176 | |
| | | | | 070 | 20 | 7 | 200ATMD176 | 200RNDD176 | | 200VXLHD176 | | 200PXDD176 | |
| | | | | 081 | 24 | 7 | | 240RNDD176 | | | | | |
| | | | | 092 | 28 | 7 | | 280RNDD176 | | | | | |

## McCulloch

**Mac 7-10, 560, 610, 620, 650, 655, 700, 800, 805, 850, 1000, CP70, CP70L, Double Eagle 80, ProMac 8200, SP70, SP80, SP81, Titan 70**

| Pitch | Gauge | Chain Type | Chain Type | Drive Links | Bar Length | Drive Teeth | Armor Tip | PowerMatch® | Pro-Lite® MG MP | Pro-Lite® SLG SLH GL GP SP | Pro-Lite® SLB | Pro-Am® | DoubleGuard® |
|---|---|---|---|---|---|---|---|---|---|---|---|---|---|
| 3/8 | .050 | **AdvanceCut** 72V | **PowerCut** 72EXL, LGX, LPX **VersaCut** 72DPX | 060 | 16 | 7 | *160ATMD176* | 160RNDD176 | | 160VXLHD176 *160GLHD176* | | 160PXDD176 | |
| | | | | 064 | 18 | 7 | | | | 180VXLHD176 | | | |
| | | | | 066 | 18 | 7 | | 180RNDD176 | | | | 180PXDD176 | |
| | | | | 070 | 20 | 7 | 200ATMD176 | 200RNDD176 | | 200VXLHD176 *200GLHD176* | | 200PXDD176 | |
| | | | | 081 | 24 | 7 | | 240RNDD176 | | | | | |
| | | | | 084 | 24 | 7 | 240ATMD176 | | | | | | |
| | | | | 092 | 28 | 7 | | 280RNDD176 | | | | | |

## Olympyk (Oleo-Mac)

**240, 241, 244, 935, OLE 140F, OLE 300** — **PowerSharp® Compatible**

| Pitch | Gauge | Chain Type | Chain Type | Drive Links | Bar Length | Drive Teeth | Armor Tip | PowerMatch® | Pro-Lite® MG MP | Pro-Lite® SLG SLH GL GP SP | Pro-Lite® SLB | Pro-Am® | DoubleGuard® |
|---|---|---|---|---|---|---|---|---|---|---|---|---|---|
| | .050 | **ControlCut** 91PXL **AdvanceCut** 91PX | **VersaCut** 91VXL | 050 | 14 | 7 | | | | *140SPEA074* | | 140SXEA074 | 140SDEA074 |
| | | | | 055 | 16 | 7 | | | | *160SPEA074* | | 160SXEA074 | 160SDEA074 |
| 3/8 low profile | Intenz ** | | | | | | | | | | | | |
| | .050 | **ControlCut** 91PXL **AdvanceCut** 91PX | **VersaCut** 91VXL | 050 | 14 | 7 | | | | *140SPET074* | | | *140SDET074* |
| | | | | 055 | 16 | 7 | | | | *160SPET074* | | | *160SDET074* |

See page FOR 142 for saw chain sharpening tools

* See page FOR 4 for important information on Guard Mate bar-nose tip guards

** See page FOR 4 for important information on Intenz guide bars.

† ANSI B175.1-2012 and CSA Standard Z62.3 regarding reduced kickback does not apply to pole saws or pruners

For the most current fit-up information visit **OregonProducts.com**

# Guide Bar & Saw Chain Applications



| Saw Chain | | | | Guide Bars | | | | | | | | | |
|---|---|---|---|---|---|---|---|---|---|---|---|---|---|
| | | | | | | DuraCut™ AT | PowerCut™ RN RW GN PM | SpeedCut™ TXL | VersaCut™ VXL | ControlCut™ PXL | AdvanceCut™ SF SX PX GD MLB | Single Rivet SD DG MLE |
| Pitch | Gauge | Chain Type | Drive Links | Bar Length | Drive Teeth | Armor Tip | PowerMatch® | Pro-Lite® MG MP | Pro-Lite® SLG SLH GL GP SP | Pro-Lite® SLB | Pro-Am® | DoubleGuard® |

## Olympyk (Oleo-Mac)

**938, 940C, 941, 945, 950, 951, 956, 962**

| Pitch | Gauge | Chain Type | | Drive Links | Bar Length | Drive Teeth | Armor Tip | PowerMatch® | Pro-Lite® MG MP | Pro-Lite® SLG SLH GL GP SP | Pro-Lite® SLB | Pro-Am® | DoubleGuard® |
|---|---|---|---|---|---|---|---|---|---|---|---|---|---|
| .325 | .050 | **ControlCut** 20BPX | **PowerCut** 20LPX | 066 | 16 | 8 | *160ATMZ095* | 160RNBK095 | | *160SLGK095* 160VXLGK095 | | *160PXBK095* | |
| | | | | 072 | 18 | 7 | *180ATMZ095* | | | *180SLBK095* *180SLGK095* | | 180PXBK095 | |
| | | | | 072 | 18 | 8 | | | | 180VXLGK095 | | | |
| | | | | 078 | 20 | 7 | 200ATMK095 | | | *200SLGK095* 200VXLGK095 | | 200PXBK095 | |
| | .058 | **ControlCut** 21BPX | **PowerCut** 21LPX | 066 | 16 | 7 | | 168RNBK095 | | 168VXLGK095 | *168SLBK095* 168PXLBK095 | 168SFGK095 168PXBK095 | |
| | | | | 072 | 18 | 8 | | 188RNBK095 | | *188SLGK095* 188VXLGK095 | 188PXLBK095 | 188SFGK095 188PXBK095 | |
| | | | | 078 | 20 | 7 | | 208RNBK095 | | | *208SLGK095* 208VXLGK095 | 208PXBK095 208SFGK095 | |
| | Narrow Kerf | | | | | | | | | | | | |
| | .050 | *95VPX* | **SpeedCut** 95TXL | 066 | 16 | 7 | | | *160MPBK095* 160TXLBK095 | | | 160MLBK095 | |
| | | | | 072 | 18 | 7 | | | 180TXLBK095 | | | 180MLBK095 | |
| | | | | 078 | 20 | 7 | | | 200TXLBK095 | | | | |

**250, 250A, 251, 252, 254, 260, 261, 264, 355, 460A Super**

| Pitch | Gauge | Chain Type | | Drive Links | Bar Length | Drive Teeth | Armor Tip | PowerMatch® | Pro-Lite® MG MP | Pro-Lite® SLG SLH GL GP SP | Pro-Lite® SLB | Pro-Am® | DoubleGuard® |
|---|---|---|---|---|---|---|---|---|---|---|---|---|---|
| 3/8 | .050 | **AdvanceCut** 72V | **PowerCut** 72EXL, LGX, LPX **VersaCut** 72DPX | 060 | 16 | 7 | | *160RNDD196* | | *160GLHD196* | | 160GDDD096 | |
| | | | | 064 | 18 | 8 | | | | | | | |
| | | | | 066 | 18 | 7 | | | | | | | |
| | | | | 070 | 20 | 7 | | *200GNDD196* 200RNDD196 | | *200GLHD196* | | 200GDDD096 | |
| | | | | 081 | 24 | 7 | | 240RNDD196 | | | | | |
| | | | | 093 | 27 | 7 | | *270GNDD196* | | | | | |
| | .058 | **AdvanceCut** 73V | **PowerCut** 73EXL, LGX, LPX **VersaCut** 73DPX | 060 | 16 | 8 | | | | *168SLHD024* | | | |
| | | | | 068 | 18 | 8 | | | | | | | |
| | | | | 072 | 20 | 8 | | 208RNDD024 | | 208VXLHD024 | | | |

See our guides for chainsaws with a **green triangle** on pages FOR 2–3

See our guides for chainsaws with a **yellow triangle** on pages FOR 2–3

Saw chain complies with low kickback performance requirements (FOR 2–3)

Saw chain does not comply with low kickback performance requirements (FOR 2–3)

For information on our PowerSharp Kits see pages FOR 136–137

For Bar & Chain Combos see pages FOR 100–101

Part numbers printed in *red italics* have been obsoleted. Contact your authorized Oregon distributor for availability.

# Guide Bar & Saw Chain Applications



| Saw Chain | | | | Guide Bars | | | | | | | | | |
|---|---|---|---|---|---|---|---|---|---|---|---|---|---|
| | | | | | | DuraCut™ AT | PowerCut™ RN RW GN PM | SpeedCut™ TXL | VersaCut™ VXL | ControlCut™ PXL | AdvanceCut™ SF SX PX GD MLB | Single Rivet SD DG MLE |
| Pitch | Gauge | Chain Type | Drive Links | Bar Length | Drive Teeth | Armor Tip | PowerMatch® | Pro-Lite® MG MP | Pro-Lite® SLG SLH GL GP SP | Pro-Lite® SLB | Pro-Am® | DoubleGuard® |

## Olympyk (Oleo-Mac)

| Pitch | Gauge | Chain Type | Drive Links | Bar Length | Drive Teeth | Armor Tip | PowerMatch® | Pro-Lite® MG MP | Pro-Lite® SLG SLH GL GP SP | Pro-Lite® SLB | Pro-Am® | DoubleGuard® |
|---|---|---|---|---|---|---|---|---|---|---|---|---|
| **48, 70, 272, 280, 284, 461, 480A Super, 980, Super 482 Note: D196 bar tail slot must be filed .020" for proper fit-up** | | | | | | | | | | | | |
| 3/8 | .050 | **AdvanceCut** 72V / **PowerCut** 72EXL, LGX, LPX / **VersaCut** 72DPX | 060 | 16 | 7 | | | | | | 160GDDD096 | |
| | | | 064 | 18 | 8 | | | | | | | |
| | | | 066 | 18 | 7 | | | | | | | |
| | | | 070 | 20 | 7 | | | | *200GLHD196* | | 200GDDD096 | |
| | | | 081 | 24 | 7 | | | | | | | |
| | | | 093 | 27 | 7 | | *270GNDD196* | | | | | |
| | .058 | **AdvanceCut** 73V / **PowerCut** 73EXL, LGX, LPX / **VersaCut** 73DPX | 060 | 16 | 8 | | | | | | | |
| | | | 068 | 18 | 8 | | | | | | | |
| | | | 072 | 20 | 8 | | 208RNDD024 | | 208VXLHD024 | | | |
| | .063 | **AdvanceCut** 75V / **PowerCut** 75EXL, LGX, LPX / **VersaCut** 75DPX | 072 | 21 | 7 | 213ATMD196 | | | | | | |
| **999** | | | | | | | | | | | | |
| .404 | .063 | **PowerCut** 59L, 68LX / **VersaCut** 27X | 068 | 21 | 7 | | 213RNFE031 | | | | | |
| | | | 080 | 25 | 7 | | 253RNFE031 | | | | | |

## Oregon® Outdoor Power Equipment / Cordless Tool System / Power Now®

| Pitch | Gauge | Chain Type | Drive Links | Bar Length | Drive Teeth | Armor Tip | PowerMatch® | Pro-Lite® MG MP | Pro-Lite® SLG SLH GL GP SP | Pro-Lite® SLB | Pro-Am® | DoubleGuard® |
|---|---|---|---|---|---|---|---|---|---|---|---|---|
| **PS250, PS250-E6, PS250-A6** | | | | | | | | | | | | |
| 3/8 low profile | .043 | **AdvanceCut** 90PX | 034 | 8 | 7 | | | | | | | 084MLEA041 |
| **CS1500** | | | | | | | | | | | **PowerSharp® Equipped** | |
| 3/8 low profile | .050 | PowerSharp® 91PS | 062 | 18 | 6 | | | | | | | 180SDEA041 |
| **CS250, CS250-S6, CS250-E6, CS250-A6** | | | | | | | | | | | **PowerSharp Equipped** | |
| 3/8 low profile | .050 | PowerSharp 91PS | 052 | 14 | 6 | | | | | | | 548182<br>140SDEA041 |
| **CS300, CS300-E6, CS300-A6** | | | | | | | | | | | **PowerSharp Equipped** | |
| 3/8 low profile | .050 | PowerSharp 91PS | 056 | 16 | 6 | | | | | | | 160SDEA041 |

See page FOR 142 for saw chain sharpening tools

* See page FOR 4 for important information on Guard Mate bar-nose tip guards

** See page FOR 4 for important information on Intenz guide bars.

† ANSI B175.1-2012 and CSA Standard Z62.3 regarding reduced kickback does not apply to pole saws or pruners

For the most current fit-up information visit **OregonProducts.com**

# Guide Bar & Saw Chain Applications



**Saw Chain** | **Guide Bars**

| Pitch | Gauge | Chain Type | Drive Links | Bar Length | Drive Teeth | DuraCut™ AT | PowerCut™ RN RW GN PM | SpeedCut™ TXL | VersaCut™ VXL | ControlCut™ PXL | AdvanceCut™ SF SX PX GD MLB | Single Rivet SD DG MLE |
|---|---|---|---|---|---|---|---|---|---|---|---|---|
| | | | | | | Armor Tip | PowerMatch® | Pro-Lite® MG MP | Pro-Lite® SLG SLH GL GP SP | Pro-Lite® SLB | Pro-Am® | DoubleGuard® |

## Partner

**365**

| | | | | | | | | | | | | | |
|---|---|---|---|---|---|---|---|---|---|---|---|---|---|
| 3/8 low profile | .050 | **ControlCut** 91PXL **AdvanceCut** 91PX | **VersaCut** 91VXL | 052 | 14 | 6 | | | | | | 140SXEA041 | 140SDEA041 |

**330, 350, 1601, 1602, 1610, 1611, 1612, 1613, 1614, 1616, Mini-P Series, Spartan**

| | | | | | | | | | | | | | |
|---|---|---|---|---|---|---|---|---|---|---|---|---|---|
| 3/8 low profile | .050 | **ControlCut** 91PXL **AdvanceCut** 91PX | **VersaCut** 91VXL | 045 | 12 | 6 | | | | | | | *120SDEA064* |
| | | | | 052 | 14 | 6 | | | | | | | *140SDEA064* |
| | | | | 056 | 16 | 6 | | | | | | | |

**P-360, P-400, P-450, P-500, P-5000**

| | | | | | | | | | | | | | |
|---|---|---|---|---|---|---|---|---|---|---|---|---|---|
| | .050 | **ControlCut** 20BPX | **PowerCut** 20LPX | 066 | 16 | 7 | *160ATMZ095* | 160RNBK095 | | *160SLGK095* 160VXLGK095 | | *160PXBK095* | |
| | | | | 072 | 18 | 7 | *180ATMZ095* | | | | *180SLBK095* | 180PXBK095 | |
| | | | | 072 | 18 | 8 | | | | *180SLGK095* 180VXLGK095 | | | |
| | | | | 078 | 20 | 8 | 200ATMZ095 | 200RNBK095 | | *200SLGK095* 200VXLGK095 | | 200PXBK095 | |
| .325 | .058 | **ControlCut** 21BPX | **PowerCut** 21LPX | 056 | 13 | 7 | | | | | *138SLBK095* 138PXLBK095 | | |
| | | | | 064 | 15 | 8 | | 158RNBK095 | | 158VXLGK095 | 158PXLBK095 | | |
| | | | | 066 | 16 | 7 | | 168RNBK095 | | 168VXLGK095 | *168SLBK095* 168PXLBK095 | 168SFGK095 168PXBK095 | |
| | | | | 072 | 18 | 8 | | 188RNBK095 | | *188SLGK095* 188VXLGK095 | 188PXLBK095 | 188SFGK095 188PXBK095 | |
| | | | | 078 | 20 | 7 | | 208RNBK095 | | *208SLGK095* 208VXLGK095 | | 208PXBK095 208SFGK095 | |

Narrow Kerf

| | | | | | | | | | | | | | |
|---|---|---|---|---|---|---|---|---|---|---|---|---|---|
| .325 | .050 | *95VPX* | **SpeedCut** 95TXL | 056 | 13 | 7 | | | *130MPBK095* 130TXLBK095 | | | 130MLBK095 | |
| | | | | 064 | 15 | 7 | | | 150TXLBK095 | | | 150MLBK095 | |
| | | | | 066 | 16 | 7 | | | *160MPBK095* 160TXLBK095 | | | 160MLBK095 | |
| | | | | 072 | 18 | 7 | | | 180TXLBK095 | | | 180MLBK095 | |

**410, 510, 540**

Narrow Kerf

| | | | | | | | | | | | | | |
|---|---|---|---|---|---|---|---|---|---|---|---|---|---|
| .325 | .050 | *95VPX* | **SpeedCut** 95TXL | 056 | 13 | 7 | | | *130MPBK095* 130TXLBK095 | | | 130MLBK095 | |
| | | | | 064 | 15 | 7 | | | 150TXLBK095 | | | 150MLBK095 | |

See our guides for chainsaws with a **green triangle** on pages FOR 2–3

See our guides for chainsaws with a **yellow triangle** on pages FOR 2–3

Saw chain complies with low kickback performance requirements (FOR 2–3)

Saw chain does not comply with low kickback performance requirements (FOR 2–3)

For information on our PowerSharp Kits see pages FOR 136–137

For Bar & Chain Combos see pages FOR 100–101

Part numbers printed in *red italics* have been obsoleted. Contact your authorized Oregon distributor for availability.

# Guide Bar & Saw Chain Applications



| Saw Chain | | | | Guide Bars | | | | | | | | | |
|---|---|---|---|---|---|---|---|---|---|---|---|---|---|
| | | | | | | DuraCut™ AT | PowerCut™ RN RW GN PM | SpeedCut™ TXL | VersaCut™ VXL | ControlCut™ PXL | AdvanceCut™ SF SX PX GD MLB | Single Rivet SD DG MLE |
| Pitch | Gauge | Chain Type | Drive Links | Bar Length | Drive Teeth | Armor Tip | PowerMatch® | Pro-Lite® MG MP | Pro-Lite® SLG SLH GL GP SP | Pro-Lite® SLB | Pro-Am® | DoubleGuard® |

## Partner

**550, 1655, 2055, P-55, R-11, R-12, R-14, R-16, R-17, R-18, R-19, S-50, S-55, S-65**

| Pitch | Gauge | Chain Type | Drive Links | Bar Length | Drive Teeth | Armor Tip | PowerMatch® | Pro-Lite® MG MP | Pro-Lite® SLG SLH GL GP SP | Pro-Lite® SLB | Pro-Am® | DoubleGuard® |
|---|---|---|---|---|---|---|---|---|---|---|---|---|
| 3/8 | .050 | **AdvanceCut** 72V | 060 | 16 | 8 | | 160RNDD009 | | 160VXLHD009 | | | |
| | | **PowerCut** 72EXL, LGX, LPX **VersaCut** 72DPX | 068 | 18 | 8 | *180ATMD009* | 180RNDD009 | | *180SLHD009* 180VXLHD009 | | | |
| | | | 072 | 20 | 8 | 200ATMD009 | 200RNDD009 | | 200VXLHD009 | | 200SFHD009 | |
| | .058 | **AdvanceCut** 73V | 052 | 13 | 8 | | 138RNDD009 | | *138SLHD009* | | | |
| | | **PowerCut** 73EXL, LGX, LPX **VersaCut** 73DPX | 056 | 15 | 8 | | | | 158VXLHD009 | | | |
| | | | 060 | 16 | 8 | 168ATMD009 | 168RNDD009 | | 168VXLHD009 | | 168SFHD009 | |
| | | | 068 | 18 | 7 | 188ATMD009 | 188RNDD009 | | 188VXLHD009 | | 188SFHD009 | |
| | | | 072 | 20 | 8 | 208ATMD009 | 208RNDD009 | | *208SLHD009* 208VXLHD009 | | 208SFHD009 | |
| | .063 | **AdvanceCut** 75V | **PowerCut** 75EXL, LGX, LPX **VersaCut** 75DPX | 072 | 20 | 8 | 203ATMD009 | 203RNDD009 | | | | | |

## Partner

**650, 7000, P-65, P-70, P-85, P-100, R-20, R-21, R-22, R-23, R-30, R-35, R-40, R-416, R-420, R-421, R-435, R-440**

| Pitch | Gauge | Chain Type | Drive Links | Bar Length | Drive Teeth | Armor Tip | PowerMatch® | Pro-Lite® MG MP | Pro-Lite® SLG SLH GL GP SP | Pro-Lite® SLB | Pro-Am® | DoubleGuard® |
|---|---|---|---|---|---|---|---|---|---|---|---|---|
| 3/8 | .050 | **AdvanceCut** 72V | 060 | 16 | 8 | | 160RNDD009 | | 160VXLHD009 | | | |
| | | **PowerCut** 72EXL, LGX, LPX **VersaCut** 72DPX | 068 | 18 | 8 | *180ATMD009* | 180RNDD009 | | *180SLHD009* 180VXLHD009 | | | |
| | | | 072 | 20 | 8 | 200ATMD009 | 200RNDD009 | | 200VXLHD009 | | 200SFHD009 | |
| | .058 | **AdvanceCut** 73V | 052 | 13 | 8 | | 138RNDD009 | | *138SLHD009* | | | |
| | | **PowerCut** 73EXL, LGX, LPX **VersaCut** 73DPX | 056 | 15 | 8 | | | | 158VXLHD009 | | | |
| | | | 060 | 16 | 8 | 168ATMD009 | 168RNDD009 | | 168VXLHD009 | | 168SFHD009 | |
| | | | 068 | 18 | 7 | 188ATMD009 | 188RNDD009 | | 188VXLHD009 | | 188SFHD009 | |
| | | | 072 | 20 | 8 | 208ATMD009 | 208RNDD009 | | *208SLHD009* 208VXLHD009 | | 208SFHD009 | |
| | .063 | **AdvanceCut** 75V | **PowerCut** 75EXL, LGX, LPX **VersaCut** 75DPX | 072 | 20 | 8 | 203ATMD009 | 203RNDD009 | | | | |

See page FOR 142 for saw chain sharpening tools

* See page FOR 4 for important information on Guard Mate bar-nose tip guards

** See page FOR 4 for important information on Intenz guide bars.

† ANSI B175.1-2012 and CSA Standard Z62.3 regarding reduced kickback does not apply to pole saws or pruners

For the most current fit-up information visit **OregonProducts.com**

# Guide Bar & Saw Chain Applications



**Saw Chain** | **Guide Bars**

| Pitch | Gauge | Chain Type | Drive Links | Bar Length | Drive Teeth | DuraCut™ AT Armor Tip | PowerCut™ RN RW GN PM PowerMatch® | SpeedCut™ TXL MG MP Pro-Lite® | VersaCut™ VXL SLG SLH GL GP SP Pro-Lite® | ControlCut™ PXL SLB Pro-Lite® | AdvanceCut™ SF SX PX GD MLB Pro-Am® | Single Rivet SD DG MLE DoubleGuard® |
|---|---|---|---|---|---|---|---|---|---|---|---|---|
| **Pioneer** ▲ | | | | | | | | | | | | |
| **P-10, P-12** | | | | | | | | | | | | |
| 3/8 low profile | .050 | **ControlCut** 91PXL **AdvanceCut** 91PX | **VersaCut** 91VXL | 045 | 12 | 6 | | | | | | *120SDEA064* |
| | | | | 052 | 14 | 6 | | | | | | *140SDEA064* |
| | | | | 056 | 16 | 6 | | | *160SPEA064* | | | |
| **1074, P-21, P-26, P-28** | | | | | | | | | | | | |
| .325 | .050 | **ControlCut** 20BPX | **PowerCut** 20LPX | 066 | 16 | 7 | *160ATMZ095* | 160RNBK095 | *160SLGK095* 160VXLGK095 | | *160PXBK095* | |
| | | | | 072 | 18 | 7 | *180ATMZ095* | | | *180SLBK095* | 180PXBK095 | |
| | | | | 072 | 18 | 8 | | | *180SLGK095* 180VXLGK095 | | | |
| | | | | 078 | 20 | 8 | 200ATMK095 | 200RNBK095 | *200SLGK095* 200VXLGK095 | | 200PXBK095 | |
| | .058 | **ControlCut** 21BPX | **PowerCut** 21LPX | 056 | 13 | 7 | | | | *138SLBK095* 138PXLBK095 | | |
| | | | | 064 | 15 | 8 | | 158RNBK095 | | 158VXLGK095 | 158PXLBK095 | |
| | | | | 066 | 16 | 7 | | 168RNBK095 | | 168VXLGK095 | *168SLBK095* 168PXLBK095 | 168SFGK095 168PXBK095 |
| | | | | 072 | 18 | 8 | | 188RNBK095 | | *188SLGK095* 188VXLGK095 | 188PXLBK095 | 188SFGK095 188PXBK095 |
| | | | | 078 | 20 | 7 | | 208RNBK095 | | *208SLGK095* 208VXLGK095 | | 208PXBK095 |
| Narrow Kerf | | | | | | | | | | | | |
| .325 | .050 | *95VPX* | **SpeedCut** 95TXL | 056 | 13 | 7 | | | *130MPBK095* 130TXLBK095 | | | 130MLBK095 |
| | | | | 064 | 15 | 7 | | | 150TXLBK095 | | | 150MLBK095 |
| | | | | 066 | 16 | 7 | | | *160MPBK095* 160TXLBK095 | | | 160MLBK095 |
| | | | | 072 | 18 | 7 | | | 180TXLBK095 | | | 180MLBK095 |
| | | | | 078 | 20 | 7 | | | 200TXLBK095 | | | |
| **515, 970, 1072, 1073, FarmLite, P-11, P-20, P-25** | | | | | | | | | | | | |
| 3/8 | .050 | **AdvanceCut** 72V | **PowerCut** 72EXL, LGX, LPX **VersaCut** 72DPX | 060 | 16 | 7 | | | | | | |
| | | | | 072 | 20 | 7 | | | | | | |
| | .058 | **AdvanceCut** 73V | **PowerCut** 73EXL, LGX, LPX **VersaCut** 73DPX | 060 | 16 | 7 | | | | | | |
| | | | | 068 | 18 | 7 | | | | | | |
| | | | | 072 | 20 | 7 | | | | | | |
| | | | | 084 | 24 | 7 | | | | | | |

▲ See our guides for chainsaws with a **green triangle** on pages FOR 2–3

▲ See our guides for chainsaws with a **yellow triangle** on pages FOR 2–3

Saw chain complies with low kickback performance requirements (FOR 2–3)

Saw chain does not comply with low kickback performance requirements (FOR 2–3)

For information on our PowerSharp Kits see pages FOR 136–137

For Bar & Chain Combos see pages FOR 100–101

Part numbers printed in *red italics* have been obsoleted. Contact your authorized Oregon distributor for availability.

# Guide Bar & Saw Chain Applications



| Saw Chain | | | | Guide Bars | | | | | | | | | | |
|---|---|---|---|---|---|---|---|---|---|---|---|---|---|---|
| | | | | | | DuraCut™ AT | PowerCut™ RN RW GN PM | SpeedCut™ TXL | VersaCut™ VXL | ControlCut™ PXL | AdvanceCut™ SF SX PX GD MLB | Single Rivet SD DG MLE | | |
| Pitch | Gauge | Chain Type | Drive Links | Bar Length | Drive Teeth | Armor Tip | PowerMatch® | Pro-Lite® MG MP | Pro-Lite® SLG SLH GL GP SP | Pro-Lite® SLB | Pro-Am® | DoubleGuard® | | |

## Pioneer

**FarmSaw, FarmSaw II, P-38, P-39, P-41, P-42, P-45, P-50, P-51, P-52, P-60, P-61, P-62, P-285**

| Pitch | Gauge | Chain Type | | Drive Links | Bar Length | Drive Teeth | Armor Tip | PowerMatch® | Pro-Lite® MG MP | Pro-Lite® SLG SLH GL GP SP | Pro-Lite® SLB | Pro-Am® | DoubleGuard® |
|---|---|---|---|---|---|---|---|---|---|---|---|---|---|
| 3/8 | .050 | **AdvanceCut** 72V | **PowerCut** 72EXL, LGX, LPX **VersaCut** 72DPX | 060 | 16 | 7 | | | | | | | |
| | | | | 072 | 20 | 7 | | | | | | | |
| | .058 | **AdvanceCut** 73V | **PowerCut** 73EXL, LGX, LPX **VersaCut** 73DPX | 060 | 16 | 7 | | | | | | | |
| | | | | 068 | 18 | 7 | | | | | | | |
| | | | | 072 | 20 | 7 | | | | | | | |
| | | | | 084 | 24 | 7 | | | | | | | |
| | .063 | **AdvanceCut** 75V | **PowerCut** 75EXL, LGX, LPX **VersaCut** 75DPX | 110 | 32 | 7 | | | | | | | |
| | | | | 119 | 36 | 7 | | | | | | | |

## Poulan / Poulan Pro

**Pole Saws†: 446T, PP258TP, PP258TPC, PP338PT, PP445, PP5000P (Attachment), PR28PS**

| Pitch | Gauge | Chain Type | | Drive Links | Bar Length | Drive Teeth | Armor Tip | PowerMatch® | Pro-Lite® MG MP | Pro-Lite® SLG SLH GL GP SP | Pro-Lite® SLB | Pro-Am® | DoubleGuard® |
|---|---|---|---|---|---|---|---|---|---|---|---|---|---|
| 3/8 low profile | .043 | **AdvanceCut** 90PX | | 034 | 8 | 5 | | | | | | | 084MLEA041 |
| | | | | 040 | 10 | 5 | | | | | | | |

**ES 300 (Electric), ES 350**

| Pitch | Gauge | Chain Type | | Drive Links | Bar Length | Drive Teeth | Armor Tip | PowerMatch® | Pro-Lite® MG MP | Pro-Lite® SLG SLH GL GP SP | Pro-Lite® SLB | Pro-Am® | DoubleGuard® |
|---|---|---|---|---|---|---|---|---|---|---|---|---|---|
| 3/8 low profile | .043 | **AdvanceCut** 90PX | | 034 | 8 | 5 | | | | | | | 084MLEA041 |
| | | | | 040 | 10 | 6 | | | | | | | |
| | | | | 056 | 16 | 6 | | | | | | | 164MLEA041 |

**25A, 180, 190, 200, 205, 210, 220, 221, 222, 225, 230, 235, 236, 240, 250, 255, 260, 262, 400E, 1220, 1630, 1634, 1800, 1838, 1900, 1900LE, 1950, 1950LE, 1975, 1975LE, 2000, 2025, 2050, 2055, 2055LE, 2075, 2075C, 2150, 2155, 2160, 2175, 2250, 2250LE, 2300, 2350, 2375, 2375LE, 2450, 2550, 2550LE, 2555, 3314, 3314 WS, 3314 WSA, 3416, 3516, 3516 PR, 3516AVX, 3816, 3816AV, 3818, 4018, 4018WT, 4218, 4218A, 4218AV, 4218AVX, E14E, E16E, ES350, ES400, Micro 25 (XX Series and XXV Series), S23, S25, S25AV, S25CVA, S25D, S25DA, S35 (After conversion from 1/4" to 3/8" pitch); Electric Models: 1420, 1425, 1625, 2100, 2400, 2500, 2600, Electric Pro 400E, Patriot 1900, PP3516AVX, Wildthing, Woodshark; Some saws may take .325" pitch chain, see other applications.**

PowerSharp® Compatible

| Pitch | Gauge | Chain Type | | Drive Links | Bar Length | Drive Teeth | Armor Tip | PowerMatch® | Pro-Lite® MG MP | Pro-Lite® SLG SLH GL GP SP | Pro-Lite® SLB | Pro-Am® | DoubleGuard® |
|---|---|---|---|---|---|---|---|---|---|---|---|---|---|
| 3/8 low profile | .050 | **ControlCut** 91PXL **AdvanceCut** 91PX | **VersaCut** 91VXL | 040 | 10 | 6 | | | | | | | 100SDEA041 |
| | | | | 045 | 12 | 6 | | | | *120GPEA041* *120SPEA041* | | 120SXEA041 | 120SDEA041 |
| | | | | 052 | 14 | 6 | | | | | | 140SXEA041 | 140SDEA041 |
| | | | | 056 | 16 | 6 | | | | *160GPEA041* | | 160SXEA041 | 160SDEA041 |
| | | | | 058 | 16 | 6 | | | | | | | |
| | | | | 062 | 18 | 6 | | | | | | | 180SDEA041 |
| | Intenz® ** | | | | | | | | | | | | |
| | .050 | **ControlCut** 91PXL **AdvanceCut** 91PX | **VersaCut** 91VXL | 045 | 12 | 6 | | | | *120SPET041* | | | |
| | | | | 052 | 14 | 6 | | | | *140SPET041* | | | 140SDET041 140SDET041 |
| | | | | 056 | 16 | 6 | | | | *160GPET041* *160SPET041* | | | 160SDET041 |
| | | | | 062 | 18 | 6 | | | | | | | 180SDET041 |
| | .043 | **AdvanceCut** 90PX | | 040 | 10 | 6 | | | | | | | |
| | | | | 045 | 12 | 6 | | | | | | | 124MLEA041 |
| | | | | 052 | 14 | 6 | | | | | | | 144MLEA041 |

See page FOR 142 for saw chain sharpening tools

* See page FOR 4 for important information on Guard Mate bar-nose tip guards

** See page FOR 4 for important information on Intenz guide bars.

† ANSI B175.1-2012 and CSA Standard Z62.3 regarding reduced kickback does not apply to pole saws or pruners

For the most current fit-up information visit **OregonProducts.com**

# Guide Bar & Saw Chain Applications



| Saw Chain | | | | Guide Bars | | | | | | | | | |
|---|---|---|---|---|---|---|---|---|---|---|---|---|---|
| | | | | | | DuraCut™ AT | PowerCut™ RN RW GN PM | SpeedCut™ TXL | VersaCut™ VXL | ControlCut™ PXL | AdvanceCut™ SF SX PX GD MLB | Single Rivet SD DG MLE |
| Pitch | Gauge | Chain Type | Drive Links | Bar Length | Drive Teeth | Armor Tip | PowerMatch® | Pro-Lite® MG MP | Pro-Lite® SLG SLH GL GP SP | Pro-Lite® SLB | Pro-Am® | DoubleGuard® |

## Poulan / Poulan Pro

| Pitch | Gauge | Chain Type | | Drive Links | Bar Length | Drive Teeth | Armor Tip | PowerMatch® | Pro-Lite® MG MP | Pro-Lite® SLG SLH GL GP SP | Pro-Lite® SLB | Pro-Am® | DoubleGuard® |
|---|---|---|---|---|---|---|---|---|---|---|---|---|---|
| **Micro 25PS** | | | | | | | | | | | | | |
| 3/8 low profile | .050 | **ControlCut** 91PXL **AdvanceCut** 91PX | **VersaCut** 91VXL | 052 | 14 | 6 | | | | | | | 140SDEA041 |
| **PLN1510** | | | | | | | | | | | | | |
| 3/8 low profile | .050 | **ControlCut** 91PXL **AdvanceCut** 91PX | **VersaCut** 91VXL | 039 | 10 | 6 | | | | | | | |
| **PLN1514** | | | | | | | | | | | | | |
| 3/8 low profile | .050 | **ControlCut** 91PXL **AdvanceCut** 91PX | **VersaCut** 91VXL | 049 | 14 | 6 | | | | | | | 140SDEA318 |
| **PLN3516F** | | | | | | | | | | | | | |
| 3/8 low profile | .050 | **ControlCut** 91PXL **AdvanceCut** 91PX | **VersaCut** 91VXL | 055 | 16 | 6 | | | | *160SPEA318* | | | 160SDEA318 |
| **285, 295, 305, 306SA, 310, 315, 335 Predator, 336, 2700, 2750, 2775, 2800, 2900 Farm Hand, 3000, 3050, 3100, 3300, 4600, 4620, 4620AV, 4620AVX; Some saws may take 3/8" pitch chain, see other applications.** | | | | | | | | | | | | | |
| | .050 | **ControlCut** 20BPX | **PowerCut** 20LPX | 056 | 13 | 8 | | | | | | | |
| | | | | 066 | 16 | 7 | | 160RNBK041 | | *160GLGK041* | | 160PXBK041 | |
| | | | | 072 | 18 | 7 | | 180RNBK041 | | 180VXLGK041 *180GLGK041* | | 180PXBK041 | |
| | | | | 078 | 20 | 7 | | | | *200GLGK041* | | 200PXBK041 | |
| | Intenz® ** | | | | | | | | | | | | |
| .325 | .050 | **ControlCut** 20BPX | **PowerCut** 20LPX | 066 | 16 | 7 | | | | | | *160PXBT041* | |
| | | | | 072 | 18 | 7 | | | | | | *180PXBT041* | |
| | | | | 078 | 20 | 7 | | | | | | 200PXBT041 | |
| | Narrow Kerf | | | | | | | | | | | | |
| | .050 | *95VPX* | **SpeedCut** 95TXL | 056 | 13 | 7 | | | | | | 130MLBK041 | |
| | | | | 064 | 15 | 7 | | | | | | 150MLBK041 | |
| | | | | 066 | 16 | 7 | | | 160TXLGK041 | | | 160MLBK041 | |
| | | | | 072 | 18 | 7 | | | 180TXLGK041 | | | 180MLBK041 | |
| **325...** | | | | | | | | | | | | | |
| .325 | .050 | **ControlCut** 20BPX | **PowerCut** 20LPX | 066 | 16 | 7 | *160ATMZ095* | 160RNBK095 | | *160SLGK095* 160VXLGK095 | | *160PXBK095* | |
| | | | | 072 | 18 | 7 | *180ATMZ095* | | | *180SLBK095* | | 180PXBK095 | |
| | | | | 072 | 18 | 8 | | | | *180SLGK095* 180VXLGK095 | | | |
| | | | | 078 | 20 | 8 | 200ATMZ095 | 200RNBK095 | | *200SLGK095* 200VXLGK095 | | 200PXBK095 | |

See our guides for chainsaws with a **green triangle** on pages FOR 2–3

See our guides for chainsaws with a **yellow triangle** on pages FOR 2–3

Saw chain complies with low kickback performance requirements (FOR 2–3)

Saw chain does not comply with low kickback performance requirements (FOR 2–3)

For information on our PowerSharp Kits see pages FOR 136–137

For Bar & Chain Combos see pages FOR 100–101

Part numbers printed in *red italics* have been obsoleted. Contact your authorized Oregon distributor for availability.

# Guide Bar & Saw Chain Applications



| Saw Chain | | | | Guide Bars | | | | | | | | | |
|---|---|---|---|---|---|---|---|---|---|---|---|---|---|
| | | | | | | DuraCut™ AT | PowerCut™ RN RW GN PM | SpeedCut™ TXL | VersaCut™ VXL | ControlCut™ PXL | AdvanceCut™ SF SX PX GD MLB | Single Rivet SD DG MLE |
| Pitch | Gauge | Chain Type | Drive Links | Bar Length | Drive Teeth | Armor Tip | PowerMatch® | Pro-Lite® MG MP | Pro-Lite® SLG SLH GL GP SP | Pro-Lite® SLB | Pro-Am® | DoubleGuard® |

## Poulan / Poulan Pro

| Pitch | Gauge | Chain Type | | Drive Links | Bar Length | Drive Teeth | Armor Tip | PowerMatch® | Pro-Lite® MG MP | Pro-Lite® SLG SLH GL GP SP | Pro-Lite® SLB | Pro-Am® | DoubleGuard® |
|---|---|---|---|---|---|---|---|---|---|---|---|---|---|
| **...325** | | | | | | | | | | | | | |
| .325 | .058 | **ControlCut** 21BPX | **PowerCut** 21LPX | 056 | 13 | 7 | | | | | *138SLBK095* 138PXLBK095 | | |
| | | | | 064 | 15 | 8 | | 158RNBK095 | | 158VXLGK095 | 158PXLBK095 | | |
| | | | | 066 | 16 | 7 | | 168RNBK095 | | 168VXLGK095 | *168SLBK095* 168PXLBK095 | 168SFGK095 168PXBK095 | |
| | | | | 072 | 18 | 8 | | 188RNBK095 | | *188SLGK095* 188VXLGK095 | 188PXLBK095 | 188SFGK095 188PXBK095 | |
| | | | | 078 | 20 | 7 | | 208RNBK095 | | *208SLGK095* 208VXLGK095 | | 208PXBK095 208SFGK095 | |
| Narrow Kerf | | | | | | | | | | | | | |
| .325 | .050 | *95VPX* | **SpeedCut** 95TXL | 056 | 13 | 7 | | | *130MPBK095* 130TXLBK095 | | | 130MLBK095 | |
| | | | | 064 | 15 | 7 | | | 150TXLBK095 | | | 150MLBK095 | |
| | | | | 066 | 16 | 7 | | | *160MPBK095* 160TXLBK095 | | | 160MLBK095 | |
| | | | | 072 | 18 | 7 | | | 180TXLBK095 | | | 180MLBK095 | |
| | | | | 078 | 20 | 7 | | | 200TXLBK095 | | | | |
| **203, 245, 306, 306A, 360, 361, 375, 385, 400, 446, 450, 3400, 3700, 3800** | | | | | | | | | | | | | |
| 3/8 | .050 | **AdvanceCut** 72V | **PowerCut** 72EXL, LGX, LPX **VersaCut** 72DPX | 060 | 16 | 7 | *160ATMD176* | 160RNDD176 | | 160VXLHD176 *160GLHD176* | | 160PXDD176 | |
| | | | | 064 | 18 | 7 | | | | 180VXLHD176 | | | |
| | | | | 066 | 18 | 7 | | 180RNDD176 | | | | 180PXDD176 | |
| | | | | 070 | 20 | 7 | 200ATMD176 | 200RNDD176 | | 200VXLHD176 *200GLHD176* | | 200PXDD176 | |
| | | | | 081 | 24 | 7 | | 240RNDD176 | | | | | |
| | | | | 084 | 24 | 7 | 240ATMD176 | | | | | | |
| | | | | 092 | 28 | 7 | | 280RNDD176 | | | | | |
| **330, 365, 380, 3350, 3450, 3500, 3600, 3650, 3750** | | | | | | | | | | | | | |
| 3/8 | .050 | **AdvanceCut** 72V | **PowerCut** 72EXL, LGX, LPX **VersaCut** 72DPX | 060 | 16 | 7 | | | | | | | |
| | | | | 066 | 18 | 7 | | | | | | | |
| | | | | 070 | 20 | 7 | | | *200SLDK041* | | | 200PXDK041 | |
| | | | | 076 | 22 | 7 | | | | | | | |
| | | | | 084 | 24 | 7 | | | | | | | |
| **PP4818** | | | | | | | | | | | | | |
| 3/8 | .050 | **AdvanceCut** 72V | **PowerCut** 72EXL, LGX, LPX **VersaCut** 72DPX | 066 | 20 | 7 | Original Equipment Guide Bar | | | | | | |
| | | | | 068 | 20 | 7 | 180ATMK095 | 180RNDK095 | | *180SLHK095* 180VXLHK095 | | 180SFHK095 | |

See page FOR 142 for saw chain sharpening tools

* See page FOR 4 for important information on Guard Mate bar-nose tip guards

** See page FOR 4 for important information on Intenz guide bars.

† ANSI B175.1-2012 and CSA Standard Z62.3 regarding reduced kickback does not apply to pole saws or pruners

For the most current fit-up information visit **OregonProducts.com**

# Guide Bar & Saw Chain Applications



**Saw Chain** | **Guide Bars**

| Pitch | Gauge | Chain Type | Drive Links | Bar Length | Drive Teeth | DuraCut™ Armor Tip | PowerCut™ PowerMatch® | SpeedCut™ Pro-Lite® | VersaCut™ Pro-Lite® | ControlCut™ Pro-Lite® | AdvanceCut™ Pro-Am® | Single Rivet DoubleGuard® |
|---|---|---|---|---|---|---|---|---|---|---|---|---|
| | | | | | | AT | RN RW GN PM | TXL MG MP | VXL SLG SLH GL GP SP | PXL SLB | SF SX PX GD MLB | SD DG MLE |

## Poulan / Poulan Pro

**PP5020AV, PR5020**

| Pitch | Gauge | Chain Type | | Drive Links | Bar Length | Drive Teeth | DuraCut™ Armor Tip | PowerCut™ PowerMatch® | SpeedCut™ Pro-Lite® | VersaCut™ Pro-Lite® | ControlCut™ Pro-Lite® | AdvanceCut™ Pro-Am® | Single Rivet DoubleGuard® |
|---|---|---|---|---|---|---|---|---|---|---|---|---|---|
| 3/8 | .050 | **AdvanceCut** 72V | **PowerCut** 72EXL, LGX, LPX **VersaCut** 72DPX | 070 | 20 | 7 | Original Equipment Guide Bar | | | | | | |
| | | | | 072 | 20 | 7 | 200ATMK095 | 200RNDK095 | | 200VXLHK095 | | 200SFHK095 | |

## Poulan / Poulan Pro

**395, 3900, 4000, 4200, 4400, 4900, 5200, 5400, 5500, 6700**

| Pitch | Gauge | Chain Type | | Drive Links | Bar Length | Drive Teeth | DuraCut™ Armor Tip | PowerCut™ PowerMatch® | SpeedCut™ Pro-Lite® | VersaCut™ Pro-Lite® | ControlCut™ Pro-Lite® | AdvanceCut™ Pro-Am® | Single Rivet DoubleGuard® |
|---|---|---|---|---|---|---|---|---|---|---|---|---|---|
| 3/8 | .050 | **AdvanceCut** 72V | **PowerCut** 72EXL, LGX, LPX **VersaCut** 72DPX | 060 | 16 | 7 | *160ATMD176* | 160RNDD176 | | 160VXLHD176 *160GLHD176* | | 160PXDD176 | |
| | | | | 064 | 18 | 7 | | | | 180VXLHD176 | | | |
| | | | | 066 | 18 | 7 | | 180RNDD176 | | | | 180PXDD176 | |
| | | | | 070 | 20 | 7 | 200ATMD176 | 200RNDD176 | | 200VXLHD176 *200GLHD176* | | 200PXDD176 | |
| | | | | 081 | 24 | 7 | | 240RNDD176 | | | | | |
| | | | | 084 | 24 | 7 | 240ATMD176 | | | | | | |
| | | | | 093 | 27 | 7 | | | | | | | |
| | | | | 092 | 28 | 7 | | 280RNDD176 | | | | | |
| | | | | 105 | 32 | 7 | | | | | | | |

**6900, 7700, 8500; Some saws may take .404" pitch chain, see other applications.**

| Pitch | Gauge | Chain Type | | Drive Links | Bar Length | Drive Teeth | DuraCut™ Armor Tip | PowerCut™ PowerMatch® | SpeedCut™ Pro-Lite® | VersaCut™ Pro-Lite® | ControlCut™ Pro-Lite® | AdvanceCut™ Pro-Am® | Single Rivet DoubleGuard® |
|---|---|---|---|---|---|---|---|---|---|---|---|---|---|
| 3/8 | .050 | **AdvanceCut** 72V | **PowerCut** 72EXL, LGX, LPX **VersaCut** 72DPX | 060 | 16 | 7 | | *160RNDD196* | | | | 160GDDD096 | |
| | | | | 064 | 18 | 8 | | | | | | | |
| | | | | 066 | 18 | 7 | | | | | | | |
| | | | | 070 | 20 | 7 | | *200GNDD196* 200RNDD196 | | | | 200GDDD096 | |
| | | | | 081 | 24 | 7 | | 240RNDD196 | | | | | |
| | | | | 093 | 27 | 7 | | *270GNDD196* | | | | | |
| | .058 | **AdvanceCut** 73V | **PowerCut** 73EXL, LGX, LPX **VersaCut** 73DPX | 070 | 20 | 7 | | | | | | | |
| | .063 | **AdvanceCut** 75V | **PowerCut** 75EXL, LGX, LPX **VersaCut** 75DPX | 079 | 21 | 7 | 213ATMD196 | | | | | | |
| | | | | 105 | 32 | 7 | | | | | | | |
| | | | | 117 | 36 | 7 | | | | | | | |

See our guides for chainsaws with a **green triangle** on pages FOR 2–3

See our guides for chainsaws with a **yellow triangle** on pages FOR 2–3

Saw chain complies with low kickback performance requirements (FOR 2–3)

Saw chain does not comply with low kickback performance requirements (FOR 2–3)

For information on our PowerSharp Kits see pages FOR 136–137

For Bar & Chain Combos see pages FOR 100–101

Part numbers printed in *red italics* have been obsoleted. Contact your authorized Oregon distributor for availability.

# Guide Bar & Saw Chain Applications



| Saw Chain | | | | Guide Bars | | | | | | | | | |
|---|---|---|---|---|---|---|---|---|---|---|---|---|---|
| | | | | | | DuraCut™ AT | PowerCut™ RN RW GN PM | SpeedCut™ TXL | VersaCut™ VXL | ControlCut™ PXL | AdvanceCut™ SF SX PX GD MLB | Single Rivet SD DG MLE |
| Pitch | Gauge | Chain Type | Drive Links | Bar Length | Drive Teeth | Armor Tip | PowerMatch® | Pro-Lite® MG MP | Pro-Lite® SLG SLH GL GP SP | Pro-Lite® SLB | Pro-Am® | DoubleGuard® |

## Poulan / Poulan Pro

**405, 455, 525, 655**

| Pitch | Gauge | Chain Type | Drive Links | Bar Length | Drive Teeth | Armor Tip | PowerMatch® | Pro-Lite® MG MP | Pro-Lite® SLG SLH GL GP SP | Pro-Lite® SLB | Pro-Am® | DoubleGuard® |
|---|---|---|---|---|---|---|---|---|---|---|---|---|
| 3/8 | .050 | **AdvanceCut** 72V / **PowerCut** 72EXL, LGX, LPX **VersaCut** 72DPX | 060 | 16 | 7 | | | | | | | |
| | | | 066 | 18 | 7 | | | | | | | |
| | | | 072 | 20 | 7 | | | | | | | |
| | | | 084 | 24 | 7 | | | | | | | |
| | .058 | **AdvanceCut** 73V / **PowerCut** 73EXL, LGX, LPX **VersaCut** 73DPX | 060 | 16 | 7 | | | | | | | |
| | | | 068 | 18 | 7 | | | | | | | |
| | | | 072 | 20 | 7 | | | | | | | |
| | | | 084 | 24 | 7 | | | | | | | |
| | .063 | **AdvanceCut** 75V / **PowerCut** 75EXL, LGX, LPX **VersaCut** 75DPX | 110 | 32 | 7 | | | | | | | |
| | | | 119 | 36 | 7 | | | | | | | |

**415, 425, 445, 475, 505; Some saws may take .404" pitch chain, see other applications...**

| Pitch | Gauge | Chain Type | Drive Links | Bar Length | Drive Teeth | Armor Tip | PowerMatch® | Pro-Lite® MG MP | Pro-Lite® SLG SLH GL GP SP | Pro-Lite® SLB | Pro-Am® | DoubleGuard® |
|---|---|---|---|---|---|---|---|---|---|---|---|---|
| 3/8 | .050 | **AdvanceCut** 72V / **PowerCut** 72EXL, LGX, LPX **VersaCut** 72DPX | 060 | 16 | 8 | | 160RNDD009 | | 160VXLHD009 | | | |
| | | | 068 | 18 | 8 | *180ATMD009* | 180RNDD009 | | *180SLHD009* 180VXLHD009 | | | |
| | | | 072 | 20 | 8 | 200ATMD009 | 200RNDD009 | | 200VXLHD009 | | 200SFHD009 | |
| | | | 076 | 22 | 7 | | | | | | | |
| | | | 084 | 24 | 8 | 240ATMD009 | 240RNDD009 | | | | 240SFHD009 | |
| | | | 093 | 28 | 7 | | 280RNDD009 280RWDD009 | | | | | |
| | | | 098 | 30 | 7 | | 300RNDD009 | | | | | |
| | | | 105 | 32 | 7 | | 320RNDD009 320RWDD009 | | | | | |
| | .058 | **AdvanceCut** 73V / **PowerCut** 73EXL, LGX, LPX **VersaCut** 73DPX | 052 | 13 | 8 | | 138RNDD009 | | *138SLHD009* | | | |
| | | | 056 | 15 | 8 | | | | 158VXLHD009 | | | |
| | | | 060 | 16 | 8 | 168ATMD009 | 168RNDD009 | | 168VXLHD009 | | 168SFHD009 | |
| | | | 068 | 18 | 8 | 188ATMD009 | 188RNDD009 | | 188VXLHD009 | | 188SFHD009 | |
| | | | 072 | 20 | 8 | 208ATMD009 | 208RNDD009 | | *208SLHD009* 208VXLHD009 | | 208SFHD009 | |
| | | | 076 | 22 | 7 | | 228RNDD009 | | | | | |
| | | | 084 | 24 | 7 | 248ATMD009 | 248RNDD009 | | | | 248SFHD009 | |
| | | | 089 | 26 | 8 | | 268RNDD009 | | | | | |
| | | | 092 | 28 | 7 | 288ATMD009 | 288RNDD009 | | | | | |
| | | | 102 | 30 | 8 | | 308RNDD009 | | | | | |
| | | | 110 | 33 | 7 | | 338RWDD009 338PMDD009 | | | | | |
| | | | 119 | 37 | 7 | | 378RWDD009 378PMDD009 | | | | | |

See page FOR 142 for saw chain sharpening tools

* See page FOR 4 for important information on Guard Mate bar-nose tip guards

** See page FOR 4 for important information on Intenz guide bars.

† ANSI B175.1-2012 and CSA Standard Z62.3 regarding reduced kickback does not apply to pole saws or pruners

For the most current fit-up information visit **OregonProducts.com**

# Guide Bar & Saw Chain Applications



| Saw Chain | | | | Guide Bars | | | | | | | | | |
|---|---|---|---|---|---|---|---|---|---|---|---|---|---|
| | | | | | | DuraCut™ AT | PowerCut™ RN RW GN PM | SpeedCut™ TXL | VersaCut™ VXL | ControlCut™ PXL | AdvanceCut™ SF SX PX GD MLB | Single Rivet SD DG MLE |
| Pitch | Gauge | Chain Type | Drive Links | Bar Length | Drive Teeth | Armor Tip | PowerMatch® | Pro-Lite® MG MP | Pro-Lite® SLG SLH GL GP SP | Pro-Lite® SLB | Pro-Am® | DoubleGuard® |

## Poulan / Poulan Pro

**...415, 425, 445, 475, 505; Some saws may take .404" pitch chain, see other applications**

| Pitch | Gauge | Chain Type | Chain Type | Drive Links | Bar Length | Drive Teeth | Armor Tip | PowerMatch® | Pro-Lite® MG MP | Pro-Lite® SLG SLH GL GP SP | Pro-Lite® SLB | Pro-Am® | DoubleGuard® |
|---|---|---|---|---|---|---|---|---|---|---|---|---|---|
| | .063 | **AdvanceCut** 75V | **PowerCut** 75EXL, LGX, LPX **VersaCut** 75DPX | 072 | 20 | 7 | 203ATMD009 | 203RNDD009 | | | | | |
| | | | | 084 | 24 | 7 | 243ATMD009 | 243RNDD009 | | | | | |
| | | | | 093 | 28 | 7 | | 283RNDD009<br>283RWDD009 | | | | | |
| | | | | 098 | 30 | 7 | | | | | | | |
| | | | | 105 | 32 | 7 | | 323RNDD009<br>323RWDD009 | | | | | |
| | | | | 110 | 34 | 7 | | 343RNDD009 | | | | | |
| | | | | 115 | 36 | 7 | | 363RWDD009<br>363RNDD009 | | | | | |
| | | | | 119 | 37 | 7 | | | | | | | |
| | | | | 135 | 42 | 7 | | 423RNDD009 | | | | | |
| .404 | .058 | | **PowerCut** *58L* | 084 | 28 | 7 | | | | | | | |
| | | | | 104 | 33 | 7 | | | | | | | |
| | .063 | | **PowerCut** 59L, 68LX **VersaCut** 27X | 095 | 32 | 7 | | | | | | | |
| | | | | 104 | 36 | 7 | | 363RNFD009 | | | | | |

**6900, 7700, 8500; Some saws may take 3/8" pitch chain, see other applications.**

| Pitch | Gauge | Chain Type | Chain Type | Drive Links | Bar Length | Drive Teeth | Armor Tip | PowerMatch® | Pro-Lite® MG MP | Pro-Lite® SLG SLH GL GP SP | Pro-Lite® SLB | Pro-Am® | DoubleGuard® |
|---|---|---|---|---|---|---|---|---|---|---|---|---|---|
| .404 | .063 | | **PowerCut** 59L, 68LX **VersaCut** 27X | 106 | 36 | 7 | | | | | | | |

## Power Pruner / Echo Power Pruner†

**PP300, PP400, PP600, PP800, PP1200, PP1250, PP1260, PP1400, PP1400-D, PPF-210, PPF-211, PPF-225, PPF-2100, PPF-2400, PPSR-2122, PPSR-2433, PPT-230, PPT-231, PPT-260, PPT-261, PPT-2100, PPT-2400**

| Pitch | Gauge | Chain Type | Chain Type | Drive Links | Bar Length | Drive Teeth | Armor Tip | PowerMatch® | Pro-Lite® MG MP | Pro-Lite® SLG SLH GL GP SP | Pro-Lite® SLB | Pro-Am® | DoubleGuard® |
|---|---|---|---|---|---|---|---|---|---|---|---|---|---|
| | .050 | **ControlCut** 91PXL **AdvanceCut** 91PX | **VersaCut** 91VXL | 034 | 8 | 6 | | | | | | | |
| | | | | 039 | 10 | 6 | | | | | | | 100SDEA218 |
| | | | | 044 | 12 | 6 | | | | | | | 120SDEA218 |
| | Intenz® ** | | | | | | | | | | | | |
| 3/8 low profile | .050 | **ControlCut** 91PXL **AdvanceCut** 91PX | **VersaCut** 91VXL | 044 | 12 | 6 | | | | | | | 120SDET218 |
| | .043 | **AdvanceCut** 90PX | | 039 | 10 | 6 | | | | | | | 104MLEA218 |
| | | | | 044 | 12 | 6 | | | | | | | 124MLEA218 |

See our guides for chainsaws with a **green triangle** on pages FOR 2–3

See our guides for chainsaws with a **yellow triangle** on pages FOR 2–3

Saw chain complies with low kickback performance requirements (FOR 2–3)

Saw chain does not comply with low kickback performance requirements (FOR 2–3)

For information on our PowerSharp Kits see pages FOR 136–137

For Bar & Chain Combos see pages FOR 100–101

Part numbers printed in *red italics* have been obsoleted. Contact your authorized Oregon distributor for availability.

# Guide Bar & Saw Chain Applications



| Saw Chain | | | | Guide Bars | | | | | | | | | |
|---|---|---|---|---|---|---|---|---|---|---|---|---|---|
| | | | | | | DuraCut™ AT | PowerCut™ RN RW GN PM | SpeedCut™ TXL | VersaCut™ VXL | ControlCut™ PXL | AdvanceCut™ SF SX PX GD MLB | Single Rivet SD DG MLE |
| Pitch | Gauge | Chain Type | Drive Links | Bar Length | Drive Teeth | Armor Tip | PowerMatch® | Pro-Lite® MG MP | Pro-Lite® SLG SLH GL GP SP | Pro-Lite® SLB | Pro-Am® | DoubleGuard® |

## Power Pruner / Echo Power Pruner†

**PPF-280, PPT-280, PPT-265, PPT-265H, PPT-265S** — PowerSharp® Compatible

| Pitch | Gauge | Chain Type | Chain Type | Drive Links | Bar Length | Drive Teeth | Armor Tip | PowerMatch® | Pro-Lite® MG MP | Pro-Lite® SLG SLH GL GP SP | Pro-Lite® SLB | Pro-Am® | DoubleGuard® |
|---|---|---|---|---|---|---|---|---|---|---|---|---|---|
| | .050 | **ControlCut** 91PXL **AdvanceCut** 91PX | **VersaCut** 91VXL | 039 | 10 | 6 | Original Equipment Guide Bar | | | | | | |
| | | | | 040 | 10 | 6 | | | | | | | 100sdea041 |
| | | | | 044 | 12 | 6 | Original Equipment Guide Bar | | | | | | |
| | | | | 045 | 12 | 6 | | | | *120GPEA041* | | 120SXEA041 | 120DGEA041 |
| | | | | 049 | 14 | 6 | Original Equipment Guide Bar | | | | | | |
| | | | | 052 | 14 | 6 | | | | | | 140SXEA041 | 140DGEA041 |
| | Intenz ** | | | | | | | | | | | | |
| 3/8 low profile | .050 | **ControlCut** 91PXL **AdvanceCut** 91PX | **VersaCut** 91VXL | 045 | 12 | 6 | | | | | | | 120DGET041 |
| | | | | 052 | 14 | 6 | | | | | | | 140DGET041 |
| | .043 | **AdvanceCut** 90PX | | 039 | 10 | 6 | Original Equipment Guide Bar | | | | | | |
| | | | | 040 | 10 | 6 | | | | | | | |
| | | | | 044 | 12 | 6 | Original Equipment Guide Bar | | | | | | |
| | | | | 045 | 12 | 6 | | | | | | | 124MLEA041 |
| | | | | 049 | 14 | 6 | Original Equipment Guide Bar | | | | | | |
| | | | | 052 | 14 | 6 | | | | | | | 144MLEA041 |

## Powerhorse

**190500, 190501, 190555**

| Pitch | Gauge | Chain Type | Chain Type | Drive Links | Bar Length | Drive Teeth | Armor Tip | PowerMatch® | Pro-Lite® MG MP | Pro-Lite® SLG SLH GL GP SP | Pro-Lite® SLB | Pro-Am® | DoubleGuard® |
|---|---|---|---|---|---|---|---|---|---|---|---|---|---|
| 3/8 low profile | .050 | **ControlCut** 91PXL **AdvanceCut** 91PX | **VersaCut** 91VXL | 052 | 14 | | | | | | | 140SXEA041 | 140SDEA041 |
| | | | | 056 | 16 | | | | | | | 160SXEA041 | 160SDEA041 |

**190502, 190503, 190557, 190559**

| Pitch | Gauge | Chain Type | Chain Type | Drive Links | Bar Length | Drive Teeth | Armor Tip | PowerMatch® | Pro-Lite® MG MP | Pro-Lite® SLG SLH GL GP SP | Pro-Lite® SLB | Pro-Am® | DoubleGuard® |
|---|---|---|---|---|---|---|---|---|---|---|---|---|---|
| | .050 | **ControlCut** 20BPX | **PowerCut** 20LPX | 072 | 18 | | | | | | | 180PXBK095 | |
| | | | | 078 | 20 | | | | | | | 200PXBK095 | |
| .325 | .058 | **ControlCut** 21BPX | **PowerCut** 21LPX | 072 | 18 | 8 | | 188RNBK095 | | *188SLGK095* 188VXLGK095 | 188PXLBK095 | 188SFGK095 188PXBK095 | |
| | | | | 078 | 20 | 7 | | 208RNBK095 | | *208SLGK095* 208VXLGK095 | | 208PXBK095 | |

## Redmax (Komatsu Zenoah America, Inc.)

**G390, G450AVS, G455AVS, G5000, G5000AVS, G5300, GZ381, GZ500, GZ4350, GZ5000...**

| Pitch | Gauge | Chain Type | Chain Type | Drive Links | Bar Length | Drive Teeth | Armor Tip | PowerMatch® | Pro-Lite® MG MP | Pro-Lite® SLG SLH GL GP SP | Pro-Lite® SLB | Pro-Am® | DoubleGuard® |
|---|---|---|---|---|---|---|---|---|---|---|---|---|---|
| .325 | .050 | **ControlCut** 20BPX | **PowerCut** 20LPX | 066 | 16 | 7 | *160ATMZ095* | 160RNBK095 | | *160SLGK095* 160VXLGK095 | | *160PXBK095* | |
| | | | | 072 | 18 | 7 | *180ATMZ095* | | | | *180SLBK095* | 180PXBK095 | |
| | | | | 072 | 18 | 8 | | | | *180SLGK095* 180VXLGK095 | | | |
| | | | | 078 | 20 | 8 | 200ATMZ095 | 200RNBK095 | | *200SLGK095* 200VXLGK095 | | 200PXBK095 | |

See page FOR 142 for saw chain sharpening tools

* See page FOR 4 for important information on Guard Mate bar-nose tip guards

** See page FOR 4 for important information on Intenz guide bars.

† ANSI B175.1-2012 and CSA Standard Z62.3 regarding reduced kickback does not apply to pole saws or pruners

For the most current fit-up information visit **OregonProducts.com**

# Guide Bar & Saw Chain Applications



| Saw Chain | | | | Guide Bars | | | | | | | | | |
|---|---|---|---|---|---|---|---|---|---|---|---|---|---|
| | | | | | | DuraCut™ AT | PowerCut™ RN RW GN PM | SpeedCut™ TXL | VersaCut™ VXL | ControlCut™ PXL | AdvanceCut™ SF SX PX GD MLB | Single Rivet SD DG MLE |
| Pitch | Gauge | Chain Type | Drive Links | Bar Length | Drive Teeth | Armor Tip | PowerMatch® | Pro-Lite® MG MP | Pro-Lite® SLG SLH GL GP SP | Pro-Lite® SLB | Pro-Am® | DoubleGuard® |

## Redmax (Komatsu Zenoah America, Inc.)

**...G390, G450AVS, G455AVS, G5000, G5000AVS, G5300, GZ381, GZ500, GZ4350, GZ5000**

| Pitch | Gauge | Chain Type | | Drive Links | Bar Length | Drive Teeth | Armor Tip | PowerMatch® | Pro-Lite® MG MP | Pro-Lite® SLG SLH GL GP SP | Pro-Lite® SLB | Pro-Am® | DoubleGuard® |
|---|---|---|---|---|---|---|---|---|---|---|---|---|---|
| .325 | .058 | **ControlCut** 21BPX | **PowerCut** 21LPX | 056 | 13 | 7 | | | | | *138SLBK095* 138PXLBK095 | | |
| | | | | 064 | 15 | 8 | | 158RNBK095 | | 158VXLGK095 | 158PXLBK095 | | |
| | | | | 066 | 16 | 7 | | 168RNBK095 | | 168VXLGK095 | *168SLBK095* 168PXLBK095 | 168SFGK095 168PXBK095 | |
| | | | | 072 | 18 | 8 | | 188RNBK095 | | *188SLGK095* 188VXLGK095 | 188PXLBK095 | 188SFGK095 188PXBK095 | |
| | | | | 078 | 20 | 7 | | 208RNBK095 | | *208SLGK095* 208VXLGK095 | | 208PXBK095 208SFGK095 | |
| | Narrow Kerf | | | | | | | | | | | | |
| | .050 | *95VPX* | **SpeedCut** 95TXL | 056 | 13 | 7 | | | *130MPBK095* 130TXLBK095 | | | 130MLBK095 | |
| | | | | 064 | 15 | 7 | | | 150TXLBK095 | | | 150MLBK095 | |
| | | | | 066 | 16 | 7 | | | *160MPBK095* 160TXLBK095 | | | 160MLBK095 | |
| | | | | 072 | 18 | 7 | | | 180TXLBK095 | | | 180MLBK095 | |
| | | | | 078 | 20 | 7 | | | 200TXLBK095 | | | | |
| **GZ550** | | | | | | | | | | | | | |
| 3/8 | .050 | **AdvanceCut** 72V | **PowerCut** 72EXL, LGX, LPX **VersaCut** 72DPX | 068 | 18 | 7 | | 180RNDK095 | | 180VXLHK095 | | 180SFHK095 | |
| | | | | 072 | 20 | 7 | 200ATMK095 | 200RNDK095 | | 200VXLHK095 | | 200SFHK095 | |
| | .058 | **AdvanceCut** 73V | **PowerCut** 73EXL, LGX, LPX **VersaCut** 73DPX | 068 | 18 | 7 | 188ATMK095 | 188RNDK095 | | | | 188SFHK095 | |
| | | | | 072 | 20 | 7 | 208ATMK095 | 208RNDK095 | | 208VXLHK095 | | 208SFHK095 | |
| **G561AVS** | | | | | | | | | | | | | |
| .325 | .050 | **ControlCut** 20BPX | **PowerCut** 20LPX | 068 | 16 | 7 | | | | | | | |
| | | | | 074 | 18 | 7 | | | | | | | |
| | | | | 079 | 20 | 7 | | | | | | | |
| | | | | 091 | 24 | 7 | | | | | | | |
| **GZ360** | | | | | | | | | | | | | |
| 3/8 low profile | .050 | **ControlCut** 91PXL **AdvanceCut** 91PX | **VersaCut** 91VXL | 052 | 14 | 6 | | | | | | 140SXEA095 | 140SDEA095 |
| | | | | 056 | 16 | 6 | | | | | | 160SXEA095 | 160SDEA095 |
| **GZ4500** | | | | | | | | | | | | | |
| Narrow Kerf | | | | | | | | | | | | | |
| .325 | .050 | *95VPX* | **SpeedCut** 95TXL | 066 | 16 | 7 | | | 160TXLGK041 | | | 160MLBK041 | |
| | | | | 072 | 18 | 7 | | | 180TXLGK041 | | | 180MLBK041 | |

See our guides for chainsaws with a **green triangle** on pages FOR 2–3

See our guides for chainsaws with a **yellow triangle** on pages FOR 2–3

Saw chain complies with low kickback performance requirements (FOR 2–3)

Saw chain does not comply with low kickback performance requirements (FOR 2–3)

For information on our PowerSharp Kits see pages FOR 136–137

For Bar & Chain Combos see pages FOR 100–101

Part numbers printed in *red italics* have been obsoleted. Contact your authorized Oregon distributor for availability.

# Guide Bar & Saw Chain Applications



| Saw Chain | | | | Guide Bars | | | | | | | | | |
|---|---|---|---|---|---|---|---|---|---|---|---|---|---|
| | | | | | | DuraCut™ AT | PowerCut™ RN RW GN PM | SpeedCut™ TXL | VersaCut™ VXL | ControlCut™ PXL | AdvanceCut™ SF SX PX GD MLB | Single Rivet SD DG MLE |
| Pitch | Gauge | Chain Type | Drive Links | Bar Length | Drive Teeth | Armor Tip | PowerMatch® | Pro-Lite® MG MP | Pro-Lite® SLG SLH GL GP SP | Pro-Lite® SLB | Pro-Am® | DoubleGuard® |

## Redmax (Komatsu Zenoah America, Inc.)

| Pitch | Gauge | Chain Type | | Drive Links | Bar Length | Drive Teeth | Armor Tip | PowerMatch® | Pro-Lite® MG MP | Pro-Lite® SLG SLH GL GP SP | Pro-Lite® SLB | Pro-Am® | DoubleGuard® |
|---|---|---|---|---|---|---|---|---|---|---|---|---|---|
| **G250, G300AVS, G300TS, G2500, G2500TS, G3100TS, G3200EZ, G3300EZ, G3800, G3800AVS, GZ380, GZ400, GZ3500T, GZ4000** — PowerSharp® Compatible | | | | | | | | | | | | | |
| | .050 | **ControlCut** 91PXL **AdvanceCut** 91PX | **VersaCut** 91VXL | 045 | 12 | 6 | | | | *120SPEA041* | | 120SXEA041 | 120SDEA041 |
| | | | | 052 | 14 | 6 | | | | | | 140SXEA041 | 140SDEA041 |
| | | | | 056 | 16 | 6 | | | | | | 160SXEA041 | 160SDEA041 |
| | | | | 062 | 18 | 6 | | | | | | | 180SDEA041 |
| | Intenz® ** | | | | | | | | | | | | |
| 3/8 low profile | .050 | **ControlCut** 91PXL **AdvanceCut** 91PX | **VersaCut** 91VXL | 045 | 12 | 6 | | | | *120SPET041* | | | |
| | | | | 052 | 14 | 6 | | | | *140SPET041* | | | 140SDET041 |
| | | | | 056 | 16 | 6 | | | | *160SPET041* | | | 160SDET041 |
| | | | | 062 | 18 | 6 | | | | | | | 180SDET041 |
| | .043 | **AdvanceCut** 90PX | | 045 | 12 | 6 | | | | | | | 124MLEA041 |
| | | | | 052 | 14 | 6 | | | | | | | 144MLEA041 |
| | | | | 056 | 16 | 6 | | | | | | | 164MLEA041 |
| **G621AVS** | | | | | | | | | | | | | |
| 3/8 | .050 | **AdvanceCut** 72V | **PowerCut** 72EXL, LGX, LPX **VersaCut** 72DPX | 060 | 16 | 7 | *160ATMD176* | 160RNDD176 | | *160GLHD176* | | 160PXDD176 | |
| | | | | 064 | 18 | 7 | | | | 180VXLHD176 | | | |
| | | | | 066 | 18 | 7 | | 180RNDD176 | | | | 180PXDD176 | |
| | | | | 070 | 20 | 7 | 200ATMD176 | 200RNDD176 | | *200GLHD176* | | 200PXDD176 | |
| | | | | 081 | 24 | 7 | | 240RNDD176 | | | | | |
| | | | | 092 | 28 | 7 | | 280RNDD176 | | | | | |
| **GZ7000** | | | | | | | | | | | | | |
| 3/8 | .050 | **AdvanceCut** 72V | **PowerCut** 72EXL, LGX, LPX **VersaCut** 72DPX | 068 | 18 | 8 | *180ATMD009* | 180RNDD009 | | *180SLHD009* 180VXLHD009 | | | |
| | | | | 072 | 20 | 8 | 200ATMD009 | 200RNDD009 | | 200VXLHD009 | | 200SFHD009 | |
| | | | | 076 | 22 | 7 | | | | | | | |
| | | | | 084 | 24 | 8 | 240ATMD009 | 240RNDD009 | | | | 240SFHD009 | |
| | | | | 093 | 28 | 7 | | 280RNDD009 280RWDD009 | | | | | |
| **Pole Saw Models: PRO GZ25N, PSZ 2500S** | | | | | | | | | | | | | |
| 3/8 low profile | .043 | **AdvanceCut** 90PX | | 044 | 12 | 6 | | | | | | | 124MLEA218 |
| **PSZ2401, PSZ2450S, PSZ2460S** | | | | | | | | | | | | | |
| 3/8 low profile | .043 | **AdvanceCut** 90PX | | 044 | 12 | 6 | | | | | | | |
| **PSZ2465S** | | | | | | | | | | | | | |
| 3/8 low profile | .050 | **ControlCut** 91PXL **AdvanceCut** 91PX | **VersaCut** 91VXL | 044 | 12 | 6 | | | | | | | |

See page FOR 142 for saw chain sharpening tools

* See page FOR 4 for important information on Guard Mate bar-nose tip guards

** See page FOR 4 for important information on Intenz guide bars.

† ANSI B175.1-2012 and CSA Standard Z62.3 regarding reduced kickback does not apply to pole saws or pruners

For the most current fit-up information visit **OregonProducts.com**

# Guide Bar & Saw Chain Applications



| Saw Chain | | | | Guide Bars | | | | | | | | | |
|---|---|---|---|---|---|---|---|---|---|---|---|---|---|
| | | | | | | DuraCut™ AT | PowerCut™ RN RW GN PM | SpeedCut™ TXL | VersaCut™ VXL | ControlCut™ PXL | AdvanceCut™ SF SX PX GD MLB | Single Rivet SD DG MLE |
| Pitch | Gauge | Chain Type | Drive Links | Bar Length | Drive Teeth | Armor Tip | PowerMatch® | Pro-Lite® MG MP | Pro-Lite® SLG SLH GL GP SP | Pro-Lite® SLB | Pro-Am® | DoubleGuard® |

## Remington

| Pitch | Gauge | Chain Type | | Drive Links | Bar Length | Drive Teeth | Armor Tip | PowerMatch® | Pro-Lite® MG MP | Pro-Lite® SLG SLH GL GP SP | Pro-Lite® SLB | Pro-Am® | DoubleGuard® |
|---|---|---|---|---|---|---|---|---|---|---|---|---|---|
| **100, 500, 812, 814, 816, 840AV, 850AV, 860AV, Job Master, Mighty Mite, Outdoorsman II, Rancher, Weekender, Yardmaster** | | | | | | | | | | | | | |
| 3/8 low profile | .050 | **ControlCut** 91PXL **AdvanceCut** 91PX | **VersaCut** 91VXL | 044 | 12 | 6 | | | | | | | 120SDEA318 |
| | | | | 049 | 14 | 6 | | | | *140SPEA318* | | 140SXEA318 | 140SDEA318 |
| | | | | 054 | 16 | 6 | | | | *160SPEA318* | | 160SXEA318 | 160SDEA318 |
| **Electric Models: ES1512US, ES1514AS, ES1514US, RM1215, RM1415A, RM1415U** | | | | | | | | | | | | | |
| 3/8 low profile | .050 | **ControlCut** 91PXL **AdvanceCut** 91PX | **VersaCut** 91VXL | 045 | 12 | 5 | | | | | | | 540525 |
| | | | | 050 | 14 | 5 | | | | | | | |
| **RM4214, RM4216, RM4218** | | | | | | | | | | | | | |
| 3/8 low profile | .050 | **ControlCut** 91PXL **AdvanceCut** 91PX | **VersaCut** 91VXL | 053 | 14 | 6 | | | | *140SPEA095* | | 140SXEA095 | 140SDEA095 |
| | | | | 057 | 16 | 6 | | | | *160SPEA095* | | 160SXEA095 | 160SDEA095 |
| | | | | 062 | 18 | 6 | | | | | | | |
| **Electric Models: 098031J, 099039J, 107624-01, 107624-02, 107625-01, 107625-02, 111174-01, 107714-02, CLD3616AWB, CLD4016W, CLD4018AW, CLD4018AWC, LD3516AWB, LD4016AW, LD4018AW, LD4018WC, RM1632A, RM1635W, RM1640B, RM1640W, RM1645, RM1840W** | | | | | | | | | | | | | |
| 3/8 low profile | .050 | **ControlCut** 91PXL **AdvanceCut** 91PX | **VersaCut** 91VXL | 056 | 16 | 6 | | | | | | | 540529 |
| | | | | 062 | 18 | 6 | | | | | | | 540531 |
| **Pole Saw Models†: 104317, EL-1, RM0815P, RM0818BPS** | | | | | | | | | | | | | |
| 3/8 low profile | .043 | **AdvanceCut** 90PX | | 034 | 8 | 5 | | | | | | | |
| **Pole Saw Models†: RM2599** | | | | | | | | | | | | | |
| 3/8 low profile | .043 | **AdvanceCut** 90PX | | 034 | 8 | 5 | | | | | | | 084MLEA041 |
| **M3516AW, M15012US, M15014AS, M15014US, M30016AS, M30016US, M35016AS, M35016AW, M35016US, M35016UW, RM1415M, RM1630A, RM1630U, RM1630W** | | | | | | | | | | | | | |
| 3/8 low profile | .050 | **ControlCut** 91PXL **AdvanceCut** 91PX | **VersaCut** 91VXL | 048 | 12 | 5 | | | | | | | |
| | | | | 052 | 14 | 5 | | | | | | | 540528 |
| | | | | 058 | 16 | 5 | | | | | | | |
| **Pole Saw Models†: 6 Branch Wizard, 11409-01 Branch Wizard, RM0612P** | | | | | | | | | | | | | |
| 3/8 low profile | .043 | **AdvanceCut** 90PX | | 28 | 6 | 5 | | | | | | | 540522 |
| **Pole Saw Models†: 106890-01, 106890-02, 108526-01, PS1510A, RM1015SP, RM1025P, RM1025SPS, Wizard 106821A** | | | | | | | | | | | | | |
| 3/8 low profile | .050 | **ControlCut** 91PXL **AdvanceCut** 91PX | **VersaCut** 91VXL | 40 | 10 | 5 | | | | | | | |

See our guides for chainsaws with a **green triangle** on pages FOR 2–3

See our guides for chainsaws with a **yellow triangle** on pages FOR 2–3

Saw chain complies with low kickback performance requirements (FOR 2–3)

Saw chain does not comply with low kickback performance requirements (FOR 2–3)

For information on our PowerSharp Kits see pages FOR 136–137

For Bar & Chain Combos see pages FOR 100–101

Part numbers printed in *red italics* have been obsoleted. Contact your authorized Oregon distributor for availability.

# Guide Bar & Saw Chain Applications



| Saw Chain | | | | Guide Bars | | | | | | | | | | |
|---|---|---|---|---|---|---|---|---|---|---|---|---|---|---|
| | | | | | | | DuraCut™ AT | PowerCut™ RN RW GN PM | SpeedCut™ TXL | VersaCut™ VXL | ControlCut™ PXL | AdvanceCut™ SF SX PX GD MLB | Single Rivet SD DG MLE | |
| Pitch | Gauge | Chain Type | Drive Links | Bar Length | Drive Teeth | Armor Tip | PowerMatch® | Pro-Lite® MG MP | Pro-Lite® SLG SLH GL GP SP | Pro-Lite® SLB | Pro-Am® | DoubleGuard® | | |
| **Remington** | | | | | | | | | | | | | | |
| **RM4618, RM4620, RM5118, RM5520** | | | | | | | | | | | | | | |
| .325 | .050 | **ControlCut** 20BPX | **PowerCut** 20LPX | 066 | 16 | 7 | *160ATMZ095* | 160RNBK095 | | *160SLGK095* 160VXLGK095 | | *160PXBK095* | | |
| | | | | 072 | 18 | 7 | *180ATMZ095* | | | | *180SLBK095* | 180PXBK095 | | |
| | | | | 072 | 18 | 8 | | | | *180SLGK095* 180VXLGK095 | | | | |
| | | | | 078 | 20 | 8 | 200ATMZ095 | 200RNBK095 | | *200SLGK095* 200VXLGK095 | | 200PXBK095 | | |
| **Logger, PL-4, PL-5, SL-4, SL-9, SL-10, SL-14, SL-16, Woodsman** | | | | | | | | | | | | | | |
| 3/8 | .050 | **AdvanceCut** 72V | **PowerCut** 72EXL, LGX, LPX **VersaCut** 72DPX | 060 | 16 | 7 | | *160RNDD196* | | *160GLHD196* | | 160GDDD096 | | |
| | | | | 064 | 18 | 8 | | | | | | | | |
| | | | | 066 | 18 | 7 | | | | | | | | |
| | | | | 070 | 20 | 7 | | *200GNDD196* 200RNDD196 | | *200GLHD196* | | 200GDDD096 | | |
| | | | | 081 | 24 | 7 | | 240RNDD196 | | | | | | |
| **Remington** | | | | | | | | | | | | | | |
| **PL-55, SL-11** | | | | | | | | | | | | | | |
| 3/8 | .050 | **AdvanceCut** 72V | **PowerCut** 72EXL, LGX, LPX **VersaCut** 72DPX | 060 | 16 | 7 | | *160RNDD196* | | *160GLHD196* | | 160GDDD096 | | |
| | | | | 064 | 18 | 8 | | | | | | | | |
| | | | | 066 | 18 | 7 | | | | | | | | |
| | | | | 070 | 20 | 7 | | 200RNDD196 | | *200GLHD196* | | 200GDDD096 | | |
| | | | | 081 | 24 | 7 | | 240RNDD196 | | | | | | |
| **Ryobi** | | | | | | | | | | | | | | |
| **RY10518, RY10519, RY10520, RY10521** | | | | | | | | | | | | | | |
| .325 | .050 | **ControlCut** 20BPX | **PowerCut** 20LPX | 072 | 18 | 7 | | 180RNBK041 | | 180VXLGK041 | | 180PXBK041 | | |
| | | | | 078 | 20 | 7 | | | | 200VXLGK041 | | 200GDBK041 200PXBK041 | | |
| **RY10532, ZRRY10532** | | | | | | | | | | | | | | |
| 3/8 low profile | .050 | **ControlCut** 91PXL **AdvanceCut** 91PX | **VersaCut** 91VXL | 062 | 18 | 6 | | | | | | | | |
| **P4360, RY43160** | | | | | | | | | | | | | | |
| 3/8 low profile | .043 | **AdvanceCut** 90PX | | 033 | 8 | | | | | | | | 084MLEA041 | |
| **P540, P540A, P540B, P542, P543, P545, RY52003, RY52003A, TP30 CS1800 18 Volt Cordless** | | | | | | | | | | | | | | |
| 3/8 low profile | .043 | **AdvanceCut** 90PX | | 040 | 10 | 6 | | | | | | | 104MLEA041 | |

See page FOR 142 for saw chain sharpening tools

* See page FOR 4 for important information on Guard Mate bar-nose tip guards

** See page FOR 4 for important information on Intenz guide bars.

† ANSI B175.1-2012 and CSA Standard Z62.3 regarding reduced kickback does not apply to pole saws or pruners

For the most current fit-up information visit **OregonProducts.com**

# Guide Bar & Saw Chain Applications



| Saw Chain | | | | Guide Bars | | | | | | | | | |
|---|---|---|---|---|---|---|---|---|---|---|---|---|---|
| | | | | | | DuraCut™ AT | PowerCut™ RN RW GN PM | SpeedCut™ TXL | VersaCut™ VXL | ControlCut™ PXL | AdvanceCut™ SF SX PX GD MLB | Single Rivet SD DG MLE |
| Pitch | Gauge | Chain Type | Drive Links | Bar Length | Drive Teeth | Armor Tip | PowerMatch® | Pro-Lite® MG MP | Pro-Lite® SLG SLH GL GP SP | Pro-Lite® SLB | Pro-Am® | DoubleGuard® |

## Ryobi

| | | | | | | | | | | | | | |
|---|---|---|---|---|---|---|---|---|---|---|---|---|---|
| **RY40500, RY40510B** | | | | | | | | | | | | | |
| 3/8 low profile | .043 | **AdvanceCut** 90PX | | 045 | 12 | 6 | | | | | | | 124MLEA041 |
| **RY40502, RY40511** | | | | | | | | | | | | | |
| 3/8 low profile | .043 | **AdvanceCut** 90PX | | 052 | 14 | 6 | | | | | | | 144MLEA041 |
| **Pole Saws: PP720R, P542** | | | | | | | | | | | | | |
| 3/8 low profile | .043 | **AdvanceCut** 90PX | | 034 | 8 | 6 | | | | | | | |
| | | | | 040 | 10 | | | | | | | | |

## Shindaiwa (SDK)

| | | | | | | | | | | | | | |
|---|---|---|---|---|---|---|---|---|---|---|---|---|---|
| **305s** | | | | | | | | | | | | | |
| 3/8 low profile | .050 | **ControlCut** 91PXL **AdvanceCut** 91PX | **VersaCut** 91VXL | 052 | 14 | 6 | | | | | | 140SXEA041 | 140SDEA041 |
| **358Ts** | | | | | | | | | | | | | |
| 3/8 low profile | .050 | **ControlCut** 91PXL **AdvanceCut** 91PX | **VersaCut** 91VXL | 052 | 14 | 6 | | | | | | 140SXEA041, | 140SDEA041 |
| | | | | 057 | 16 | 6 | | | | | | 160SXEA041 | 160SDEA041 |
| **340s** | | | | | | | | | | | | | |
| 3/8 low profile | .050 | **ControlCut** 91PXL **AdvanceCut** 91PX | **VersaCut** 91VXL | 057 | 16 | | | | | | | 160SXEA041 | 160SDEA041 |
| **402s** | | | | | | | | | | | | | |
| 3/8 low profile | .050 | **ControlCut** 91PXL **AdvanceCut** 91PX | **VersaCut** 91VXL | 062 | 18 | 6 | | | | | | | 180SDEA041 |

See our guides for chainsaws with a **green triangle** on pages FOR 2–3

See our guides for chainsaws with a **yellow triangle** on pages FOR 2–3

Saw chain complies with low kickback performance requirements (FOR 2–3)

Saw chain does not comply with low kickback performance requirements (FOR 2–3)

For information on our PowerSharp Kits see pages FOR 136–137

For Bar & Chain Combos see pages FOR 100–101

Part numbers printed in *red italics* have been obsoleted. Contact your authorized Oregon distributor for availability.

# Guide Bar & Saw Chain Applications



| Saw Chain | | | | Guide Bars | | | | | | | | | |
|---|---|---|---|---|---|---|---|---|---|---|---|---|---|
| | | | | | | DuraCut™ AT | PowerCut™ RN RW GN PM | SpeedCut™ TXL | VersaCut™ VXL | ControlCut™ PXL | AdvanceCut™ SF SX PX GD MLB | Single Rivet SD DG MLE |
| Pitch | Gauge | Chain Type | Drive Links | Bar Length | Drive Teeth | Armor Tip | PowerMatch® | Pro-Lite® MG MP | Pro-Lite® SLG SLH GL GP SP | Pro-Lite® SLB | Pro-Am® | DoubleGuard® |

## Shindaiwa (SDK)

| Pitch | Gauge | Chain Type | | Drive Links | Bar Length | Drive Teeth | Armor Tip | PowerMatch® | Pro-Lite® MG MP | Pro-Lite® SLG SLH GL GP SP | Pro-Lite® SLB | Pro-Am® | DoubleGuard® |
|---|---|---|---|---|---|---|---|---|---|---|---|---|---|
| **90, 100, 110, 120, 140, 150 Electric, 160 Electric, 326T** | | | | | | | | | | | | PowerSharp® Compatible | |
| 3/8 low profile | .050 | **ControlCut** 91PXL **AdvanceCut** 91PX | **VersaCut** 91VXL | 045 | 12 | 6 | | | | *120SPEA041* | | 120SXEA041 | 120SDEA041 |
| | | | | 052 | 14 | 6 | | | | | | 140SXEA041 | 140SDEA041 |
| | | | | 057 | 16 | 6 | | | | | | 160SXEA041 | 160SDEA041 |
| | | | | 062 | 18 | 6 | | | | | | | 180SDEA041 |
| | Intenz® ** | | | | | | | | | | | | |
| | .050 | **ControlCut** 91PXL **AdvanceCut** 91PX | **VersaCut** 91VXL | 045 | 12 | 6 | | | | *120SPET041* | | | |
| | | | | 052 | 14 | 6 | | | | *140SPET041* | | | 140SDET041 |
| | | | | 057 | 16 | 6 | | | | *160SPET041* | | | 160SDET041 |
| | | | | 062 | 18 | 6 | | | | | | | 180SDET041 |
| | .043 | **AdvanceCut** 90PX | | 045 | 12 | 6 | | | | | | | 124MLEA041 |
| | | | | 052 | 14 | 6 | | | | | | | 144MLEA041 |
| | | | | 057 | 16 | 6 | | | | | | | *164MLEA041* |
| **104P, 180, 345, 350, 352, 352s, 357, 360, E305AV; Some saws may take .325" pitch chain, see other applications.** | | | | | | | | | | | | PowerSharp Compatible | |
| 3/8 low profile | .050 | **ControlCut** 91PXL **AdvanceCut** 91PX | **VersaCut** 91VXL | 053 | 14 | 6 | | | | | | 140SXEA041 | 140SDEA041 |
| | | | | 057 | 16 | 6 | | | | | | 160SXEA041 | 160SDEA041 |
| | | | | 059 | 16 | 6 | | | | | | | |
| | | | | 063 | 18 | 6 | | | | | | | 180SDEA041 |
| | Intenz ** | | | | | | | | | | | | |
| | .050 | **ControlCut** 91PXL **AdvanceCut** 91PX | **VersaCut** 91VXL | 053 | 14 | 6 | | | | *140SPET041* | | | 140SDET041 |
| | | | | 057 | 16 | 6 | | | | *160SPET041* | | | 160SDET041 |
| | | | | 063 | 18 | 6 | | | | | | | 180SDET041 |
| **Pole Saw Models†: M242, M254, P230, P231, Pruner Attachment #78701, Pruner Tool #65002** | | | | | | | | | | | | | |
| 3/8 low profile | .043 | **AdvanceCut** 90PX | | 033 | 8 | 6 | | | | | | | |
| | | | | 039 | 10 | 6 | | | | | | | 104MLEA318 |
| | | | | 044 | 12 | 6 | | | | | | | |
| **491s** | | | | | | | | | | | | | |
| .325 | .050 | **ControlCut** 20BPX | **PowerCut** 20LPX | 072 | 18 | 7 | | | | *180GLGK216* | | | |
| | | | | 078 | 20 | 7 | | | | *200GLGK216* | | | |
| **591** | | | | | | | | | | | | | |
| 3/8 | .050 | **AdvanceCut** 72V | **PowerCut** 72LPX, 72LGX **VersaCut** 72DPX | 064 | 18 | 7 | | 180RNDD176 | | 180VXLHD176 | | | |
| | | | | 070 | 20 | 7 | | 200RNDD176 | | 200VXLHD176 | | | |
| **600sx** | | | | | | | | | | | | | |
| 3/8 | .050 | **AdvanceCut** 72V | **PowerCut** 72LPX, 72LGX **VersaCut** 72DPX | 070 | 20 | 7 | | 200RNDD176 | | 200VXLHD176 | | | |
| | | | | 081 | 24 | 7 | | 240RNDD176 | | | | | |
| | | | | 093 | 27 | 7 | | | | | | | |

See page FOR 142 for saw chain sharpening tools

* See page FOR 4 for important information on Guard Mate bar-nose tip guards

** See page FOR 4 for important information on Intenz guide bars.

† ANSI B175.1-2012 and CSA Standard Z62.3 regarding reduced kickback does not apply to pole saws or pruners

For the most current fit-up information visit **OregonProducts.com**

# Guide Bar & Saw Chain Applications



**Saw Chain** | **Guide Bars**

| Pitch | Gauge | Chain Type | Drive Links | Bar Length | Drive Teeth | DuraCut™ AT Armor Tip | PowerCut™ RN RW GN PM PowerMatch® | SpeedCut™ TXL MG MP Pro-Lite® | VersaCut™ VXL SLG SLH GL GP SP Pro-Lite® | ControlCut™ PXL SLB Pro-Lite® | AdvanceCut™ SF SX PX GD MLB Pro-Am® | Single Rivet SD DG MLE DoubleGuard® |
|---|---|---|---|---|---|---|---|---|---|---|---|---|
| **Shindaiwa (SDK)** ▲ | | | | | | | | | | | | |
| **360, 366, 377, 415, 446s, 450, 451, 488, 488S, 490, 500, 502s; Some saws may take 3/8" pitch chain, see other applications** | | | | | | | | | | | | |
| | .050 | **ControlCut** 20BPX | 056 | 13 | 7 | | | | | | | |
| | | | 066 | 16 | 7 | | 160RNBK041 | | 160VXLGK041<br>*160GLGK041* | | 160PXBK041 | |
| | | | 072 | 18 | 7 | | 180RNBK041 | | 180VXLGK041<br>*180GLGK041* | | 180PXBK041 | |
| | | | 078 | 20 | 7 | | | | *200GLGK041* | | 200PXBK041 | |
| .325 | Intenz® ** | | | | | | | | | | | |
| | .050 | **ControlCut** 20BPX | 066 | 16 | 7 | | | | | | *160PXBT041* | |
| | | | 072 | 18 | 7 | | | | | | *180PXBT041* | |
| | | | 078 | 20 | 7 | | | | | | 200PXBT041 | |
| | Narrow Kerf | | | | | | | | | | | |
| | .050 | *95VPX* | 056 | 13 | 7 | | | | | | 130MLBK041 | |
| | | | 064 | 15 | 7 | | | | | | 150MLBK041 | |
| | | | 066 | 16 | 7 | | | 160TXLGK041 | | | 160MLBK041 | |
| | | | 072 | 18 | 7 | | | 180TXLGK041 | | | 180MLBK041 | |
| **550, 575, 577** | | | | | | | | | | | | |
| | .050 | **AdvanceCut** 72V | 060 | 16 | 7 | | 160RNDD009 | | 160VXLHD009 | | | |
| | | | 068 | 18 | 7 | *180ATMD009* | 180RNDD009 | | *180SLHD009*<br>180VXLHD009 | | | |
| | | | 072 | 20 | 7 | *200ATMD009* | 200RNDD009 | | 200VXLHD009 | | 200SFHD009 | |
| | | | 076 | 22 | 7 | | | | | | | |
| | | | 084 | 24 | 7 | 240ATMD009 | 240RNDD009 | | | | 240SFHD009 | |
| 3/8 | .058 | **AdvanceCut** 73V | 052 | 13 | 7 | | 138RNDD009 | | *138SLHD009* | | | |
| | | | 056 | 15 | 7 | | | | 158VXLHD009 | | | |
| | | | 060 | 16 | 7 | *168ATMD009* | 168RNDD009 | | 168VXLHD009 | | 168SFHD009 | |
| | | | 068 | 18 | 7 | *188ATMD009* | 188RNDD009 | | 188VXLHD009 | | 188SFHD009 | |
| | | | 072 | 20 | 7 | *208ATMD009* | 208RNDD009 | | *208SLHD009*<br>208VXLHD009 | | 208SFHD009 | |
| | | | 076 | 22 | 7 | | 228RNDD009 | | | | | |
| | | | 084 | 24 | 7 | *248ATMD009* | 248RNDD009 | | | | 248SFHD009 | |
| | | | 089 | 26 | 8 | | 268RNDD009 | | | | | |
| | | | 092 | 28 | 7 | 288ATMD009 | 288RNDD009 | | | | | |

▲ See our guides for chainsaws with a **green triangle** on pages FOR 2–3

▲ See our guides for chainsaws with a **yellow triangle** on pages FOR 2–3

Saw chain complies with low kickback performance requirements (FOR 2–3)

Saw chain does not comply with low kickback performance requirements (FOR 2–3)

For information on our PowerSharp Kits see pages FOR 136–137

For Bar & Chain Combos see pages FOR 100–101

Part numbers printed in *red italics* have been obsoleted. Contact your authorized Oregon distributor for availability.

# Guide Bar & Saw Chain Applications



| Saw Chain | | | | | | Guide Bars | | | | | | |
|---|---|---|---|---|---|---|---|---|---|---|---|---|
| | | | | | DuraCut™ AT | PowerCut™ RN RW GN PM | SpeedCut™ TXL | VersaCut™ VXL | ControlCut™ PXL | AdvanceCut™ SF SX PX GD MLB | Single Rivet SD DG MLE |
| Pitch | Gauge | Chain Type | Drive Links | Bar Length | Drive Teeth | Armor Tip | PowerMatch® | Pro-Lite® MG MP | Pro-Lite® SLG SLH GL GP SP | Pro-Lite® SLB | Pro-Am® | DoubleGuard® |

## Shindaiwa (SDK) ▲

**680, 695, 757, 757C, 757W...**

| Pitch | Gauge | Chain Type | | Drive Links | Bar Length | Drive Teeth | Armor Tip | PowerMatch® | Pro-Lite® MG MP | Pro-Lite® SLG SLH GL GP SP | Pro-Lite® SLB | Pro-Am® | DoubleGuard® |
|---|---|---|---|---|---|---|---|---|---|---|---|---|---|
| 3/8 | .050 | **AdvanceCut** 72V | **PowerCut** 72EXL, LGX, LPX **VersaCut** 72DPX | 060 | 16 | 7 | | 160RNDD009 | | 160VXLHD009 | | | |
| | | | | 068 | 18 | 7 | *180ATMD009* | 180RNDD009 | | *180SLHD009* 180VXLHD009 | | | |
| | | | | 072 | 20 | 7 | *200ATMD009* | 200RNDD009 | | 200VXLHD009 | | 200SFHD009 | |
| | | | | 076 | 22 | 7 | | | | | | | |
| | | | | 084 | 24 | 7 | 240ATMD009 | 240RNDD009 | | | | 240SFHD009 | |
| | | | | 093 | 28 | 7 | | 280RNDD009 280RWDD009 | | | | | |
| | | | | 098 | 30 | 7 | | 300RNDD009 | | | | | |
| | | | | 105 | 32 | 7 | | 320RNDD009 320RWDD009 | | | | | |
| | .058 | **AdvanceCut** 73V | **PowerCut** 73EXL, LGX, LPX **VersaCut** 73DPX | 052 | 13 | 7 | | 138RNDD009 | | *138SLHD009* | | | |
| | | | | 056 | 15 | 7 | | | | 158VXLHD009 | | | |
| | | | | 060 | 16 | 7 | 168ATMD009 | 168RNDD009 | | 168VXLHD009 | | 168SFHD009 | |
| | | | | 068 | 18 | 7 | 188ATMD009 | 188RNDD009 | | 188VXLHD009 | | 188SFHD009 | |
| | | | | 072 | 20 | 7 | 208ATMD009 | 208RNDD009 | | *208SLHD009* 208VXLHD009 | | 208SFHD009 | |
| | | | | 076 | 22 | 7 | | 228RNDD009 | | | | | |
| | | | | 084 | 24 | 7 | *248ATMD009* | 248RNDD009 | | | | 248SFHD009 | |
| | | | | 089 | 26 | 8 | | 268RNDD009 | | | | | |
| | | | | 093 | 28 | 7 | 288ATMD009 | 288RNDD009 | | | | | |
| | | | | 102 | 30 | 8 | | 308RNDD009 | | | | | |
| | | | | 105 | 32 | 8 | | *328RNDD009* | | | | | |
| | | | | 110 | 33 | 7 | | 338RWDD009 338PMDD009 | | | | | |
| | | | | 115 | 36 | 7 | | *368RNDD009* | | | | | |
| | | | | 119 | 37 | 7 | | 378RWDD009 378PMDD009 | | | | | |
| | .063 | **AdvanceCut** 75V | **PowerCut** 75EXL, LGX, LPX **VersaCut** 75DPX | 072 | 20 | 7 | *203ATMD009* | 203RNDD009 | | | | | |
| | | | | 084 | 24 | 7 | *243ATMD009* | 243RNDD009 | | | | | |
| | | | | 093 | 28 | 7 | | 283RNDD009 283RWDD009 | | | | | |
| | | | | 098 | 30 | 7 | | | | | | | |
| | | | | 105 | 32 | 7 | | 323RNDD009 323RWDD009 | | | | | |
| | | | | 110 | 34 | 7 | | 343RNDD009 | | | | | |
| | | | | 115 | 36 | 7 | | 363RNDD009 363RWDD009 | | | | | |
| | | | | 119 | 37 | 7 | | | | | | | |
| | | | | 135 | 42 | 7 | | 423RNDD009 | | | | | |

See page FOR 142 for saw chain sharpening tools

* See page FOR 4 for important information on Guard Mate bar-nose tip guards

** See page FOR 4 for important information on Intenz guide bars.

† ANSI B175.1-2012 and CSA Standard Z62.3 regarding reduced kickback does not apply to pole saws or pruners

For the most current fit-up information visit **OregonProducts.com**

# Guide Bar & Saw Chain Applications



| Saw Chain | | | | Guide Bars | | | | | | | | | |
|---|---|---|---|---|---|---|---|---|---|---|---|---|---|
| | | | | | | DuraCut™ AT | PowerCut™ RN RW GN PM | SpeedCut™ TXL | VersaCut™ VXL | ControlCut™ PXL | AdvanceCut™ SF SX PX GD MLB | Single Rivet SD DG MLE |
| Pitch | Gauge | Chain Type | Drive Links | Bar Length | Drive Teeth | Armor Tip | PowerMatch® | Pro-Lite® MG MP | Pro-Lite® SLG SLH GL GP SP | Pro-Lite® SLB | Pro-Am® | DoubleGuard® |

## Shindaiwa (SDK)

| Pitch | Gauge | Chain Type | Drive Links | Bar Length | Drive Teeth | Armor Tip | PowerMatch® | Pro-Lite® MG MP | Pro-Lite® SLG SLH GL GP SP | Pro-Lite® SLB | Pro-Am® | DoubleGuard® |
|---|---|---|---|---|---|---|---|---|---|---|---|---|
| **...680, 695, 757, 757C, 757W** | | | | | | | | | | | | |
| .404 | .058 | **PowerCut** *58L* | 084 | 28 | 7 | | | | | | | |
| | | | 104 | 33 | 7 | | | | | | | |
| | .063 | **PowerCut** 59L, 68LX **VersaCut** 27X | 065 | 20 | 7 | | | | | | | |
| | | | 095 | 32 | 7 | | | | | | | |
| | | | 104 | 36 | 7 | | 363RNFD009 | | | | | |

## Skil

| Pitch | Gauge | Chain Type | Drive Links | Bar Length | Drive Teeth | Armor Tip | PowerMatch® | Pro-Lite® MG MP | Pro-Lite® SLG SLH GL GP SP | Pro-Lite® SLB | Pro-Am® | DoubleGuard® |
|---|---|---|---|---|---|---|---|---|---|---|---|---|
| **1620, 1622, 1624, 1631 Type 3, 1634, 1635, 1636** | | | | | | | | | | | | |
| 3/8 low profile | .050 | **ControlCut** 91PXL **AdvanceCut** 91PX / **VersaCut** 91VXL | 045 | 12 | 6 | | | | | | 120SXEA041 | 120SDEA041 |
| | | | 052 | 14 | 6 | | | | | | 140SXEA041 | 140SDEA041 |
| | | | 056 | 16 | 6 | | | | | | 160SXEA041 | 160SDEA041 |
| | | | 062 | 18 | 6 | | | | | | | 180SDEA041 |
| | Intenz® ** | | | | | | | | | | | |
| | .050 | **ControlCut** 91PXL **AdvanceCut** 91PX / **VersaCut** 91VXL | 045 | 12 | 6 | | | | *120SPET041* | | | |
| | | | 052 | 14 | 6 | | | | *140SPET041* | | | 140SDET041 |
| | | | 056 | 16 | 6 | | | | *160SPET041* | | | 160SDET041 |
| | | | 062 | 18 | 6 | | | | | | | 180SDET041 |
| | .043 | **AdvanceCut** 90PX | 045 | 12 | 6 | | | | | | | 124MLEA041 |
| | | | 052 | 14 | 6 | | | | | | | 144MLEA041 |
| | | | 056 | 16 | 6 | | | | | | | *164MLEA041* |
| **1600, 1601, 1602, 1610, 1611, 1612, 1613, 1614, 1616, 1700, 1705, 1712** | | | | | | | | | | | | |
| 3/8 low profile | .050 | **ControlCut** 91PXL **AdvanceCut** 91PX / **VersaCut** 91VXL | 045 | 12 | 6 | | | | | | | *120SDEA064* |
| | | | 052 | 14 | 6 | | | | | | | *140SDEA064* |
| | | | 056 | 16 | 6 | | | | *160SPEA064* | | | |
| **1637** | | | | | | | | | | | | |
| 3/8 low profile | .050 | **ControlCut** 91PXL **AdvanceCut** 91PX / **VersaCut** 91VXL | 057 | 16 | 6 | | | | | | | |
| **1641** | | | | | | | | | | | | |
| 3/8 | .050 | **AdvanceCut** 72V / **PowerCut** 72EXL, LGX, LPX **VersaCut** 72DPX | 060 | 16 | 7 | *160ATMD176* | 160RNDD176 | | 160VXLHD176 | | 160PXDD176 | |
| | | | 064 | 18 | 7 | | | | 180VXLHD176 | | | |
| | | | 066 | 18 | 7 | | 180RNDD176 | | | | 180PXDD176 | |
| | | | 070 | 20 | 7 | *200ATMD176* | 200RNDD176 | | 200VXLHD176 | | 200PXDD176 | |

See our guides for chainsaws with a **green triangle** on pages FOR 2–3

See our guides for chainsaws with a **yellow triangle** on pages FOR 2–3

Saw chain complies with low kickback performance requirements (FOR 2–3)

Saw chain does not comply with low kickback performance requirements (FOR 2–3)

For information on our PowerSharp Kits see pages FOR 136–137

For Bar & Chain Combos see pages FOR 100–101

Part numbers printed in *red italics* have been obsoleted. Contact your authorized Oregon distributor for availability.

# Guide Bar & Saw Chain Applications



| Saw Chain | | | | Guide Bars | | | | | | | | | |
|---|---|---|---|---|---|---|---|---|---|---|---|---|---|
| | | 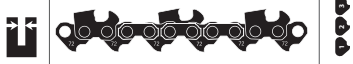 | | | | DuraCut™ AT | PowerCut™ RN RW GN PM | SpeedCut™ TXL | VersaCut™ VXL | ControlCut™ PXL | AdvanceCut™ SF SX PX GD MLB | Single Rivet SD DG MLE |
| Pitch | Gauge | Chain Type | Drive Links | Bar Length | Drive Teeth | Armor Tip | PowerMatch® | Pro-Lite® MG MP | Pro-Lite® SLG SLH GL GP SP | Pro-Lite® SLB | Pro-Am® | DoubleGuard® |

## Snapper

**S1634, S1838** — PowerSharp® Compatible

| Pitch | Gauge | Chain Type | | Drive Links | Bar Length | Drive Teeth | Armor Tip | PowerMatch® | Pro-Lite® MG MP | Pro-Lite® SLG SLH GL GP SP | Pro-Lite® SLB | Pro-Am® | DoubleGuard® |
|---|---|---|---|---|---|---|---|---|---|---|---|---|---|
| | .050 | **AdvanceCut** 91PX | **VersaCut** 91VXL | 040 | 10 | 6 | | | | | | | 100SDEA041 |
| | | | | 045 | 12 | 6 | | | | *120SPEA041* | | 120SXEA041 | 120SDEA041 |
| | | | | 052 | 14 | 6 | | | | | | 140SXEA041 | 140SDEA041 |
| | | | | 056 | 16 | 6 | | | | | | 160SXEA041 | 160SDEA041 |
| | | | | 062 | 18 | 6 | | | | | | | 180SDEA041 |
| | Intenz® ** | | | | | | | | | | | | |
| 3/8 low profile | .050 | **AdvanceCut** 91PX | **VersaCut** 91VXL | 045 | 12 | 6 | | | | *120SPET041* | | | |
| | | | | 052 | 14 | 6 | | | | *140SPET041* | | | 140SDET041 |
| | | | | 056 | 16 | 6 | | | | *160SPET041* | | | 160SDET041 |
| | | | | 062 | 18 | 6 | | | | | | | 180SDET041 |
| | .043 | **AdvanceCut** 90PX | | 040 | 10 | 6 | | | | | | | |
| | | | | 045 | 12 | 6 | | | | | | | 124MLEA041 |
| | | | | 052 | 14 | 6 | | | | | | | 144MLEA041 |

## Solo

**630, 633, 635, 636, 637, 640, 643** — PowerSharp Compatible

| Pitch | Gauge | Chain Type | | Drive Links | Bar Length | Drive Teeth | Armor Tip | PowerMatch® | Pro-Lite® MG MP | Pro-Lite® SLG SLH GL GP SP | Pro-Lite® SLB | Pro-Am® | DoubleGuard® |
|---|---|---|---|---|---|---|---|---|---|---|---|---|---|
| | .050 | **ControlCut** 91PXL **AdvanceCut** 91PX | **VersaCut** 91VXL | 045 | 12 | 6 | | | | *120SPEA095* | | 120SXEA095 | 120SDEA095 |
| | | | | 052 | 14 | 6 | | | | *140SPEA095* | | 140SXEA095 | 140SDEA095 |
| | | | | 056 | 16 | 6 | | | | *160SPEA095* | | 160SXEA095 | 160SDEA095 |
| | | | | 062 | 18 | 6 | | | | | | | |
| | Intenz ** | | | | | | | | | | | | |
| 3/8 low profile | .050 | **ControlCut** 91PXL **AdvanceCut** 91PX | **VersaCut** 91VXL | 045 | 12 | 6 | | | | | | | *120SDET095* |
| | | | | 052 | 14 | 6 | | | | *140SPET095* | | | 140SDET095 |
| | | | | 056 | 16 | 6 | | | | *160SPET095* | | | *160SDET095* |
| | .043 | **AdvanceCut** 90PX | | 052 | 14 | 6 | | | | | | | *144MLEA095* *144MLET095* |

See page FOR 142 for saw chain sharpening tools

* See page FOR 4 for important information on Guard Mate bar-nose tip guards

** See page FOR 4 for important information on Intenz guide bars.

† ANSI B175.1-2012 and CSA Standard Z62.3 regarding reduced kickback does not apply to pole saws or pruners

For the most current fit-up information visit **OregonProducts.com**

# Guide Bar & Saw Chain Applications



**Saw Chain** | **Guide Bars**

| Pitch | Gauge | Chain Type | Drive Links | Bar Length | Drive Teeth | DuraCut™ AT Armor Tip | PowerCut™ RN RW GN PM PowerMatch® | SpeedCut™ TXL MG MP Pro-Lite® | VersaCut™ VXL SLG SLH GL GP SP Pro-Lite® | ControlCut™ PXL SLB Pro-Lite® | AdvanceCut™ SF SX PX GD MLB Pro-Am® | Single Rivet SD DG MLE DoubleGuard® |
|---|---|---|---|---|---|---|---|---|---|---|---|---|
| **Solo** ▲ | | | | | | | | | | | | |
| **651, 651SP, 652** | | | | | | | | | | | | |
| .325 | .050 | **ControlCut** 20BPX / **PowerCut** 20LPX | 066 | 16 | 7 | 160ATMK095 | 160RNBK095 | | *160SLGK095* 160VXLGK095 | | *160PXBK095* | |
| | | | 072 | 18 | 7 | *180ATMZ095* | | | | *180SLBK095* | 180PXBK095 | |
| | | | 072 | 18 | 8 | | | | *180SLGK095* 180VXLGK095 | | | |
| | | | 078 | 20 | 8 | 200ATMZ095 | 200RNBK095 | | *200SLGK095* 200VXLGK095 | | 200PXBK095 | |
| | .058 | **ControlCut** 21BPX / **PowerCut** 21LPX | 066 | 16 | 7 | | | | 168VXLGK095 | | 168SFGK095 | |
| | | | 072 | 18 | 7 | | | | *188SLGK095* 188VXLGK095 | | 188SFGK095 | |
| | | | 078 | 20 | 8 | | | | *208SLGK095* 208VXLGK095 | | 208PXBK095 208SFGK095 | |
| **656, 656SP** | | | | | | | | | | | | |
| .325 | .050 | **ControlCut** 20BPX / **PowerCut** 20LPX | 066 | 16 | 7 | *160ATMZ095* | 160RNBK095 | | *160SLGK095* 160VXLGK095 | | *160PXBK095* | |
| | | | 072 | 18 | 7 | *180ATMZ095* | | | | *180SLBK095* | 180PXBK095 | |
| | | | 072 | 18 | 8 | | | | *180SLGK095* 180VXLGK095 | | | |
| | | | 078 | 20 | 7 | 200ATMZ095 | 200RNBK095 | | *200SLGK095* 200VXLGK095 | | 200PXBK095 | |
| | .058 | **ControlCut** 21BPX / **PowerCut** 21LPX | 056 | 13 | 7 | | | | | *138SLBK095* 138PXLBK095 | | |
| | | | 064 | 15 | 8 | | 158RNBK095 | | 158VXLGK095 | 158PXLBK095 | | |
| | | | 066 | 16 | 7 | | 168RNBK095 | | 168VXLGK095 | *168SLBK095* 168PXLBK095 | 168VXLGK095 168PXBK095 | |
| | | | 072 | 18 | 8 | | 188RNBK095 | | *188SLGK095* 188VXLGK095 | 188PXLBK095 | *188SLGK095* 188VXLGK095 188PXBK095 | |
| | | | 078 | 20 | 7 | | 208RNBK095 | | *208SLGK095* 208VXLGK095 | | 208PXBK095 | |
| 3/8 | .050 | **AdvanceCut** 72V / **PowerCut** 72EXL, LGX, LPX **VersaCut** 72DPX | 060 | 16 | 7 | 160ATMK095 | 160RNDK095 | | 160VXLHK095 | | 160SFHK095 | |
| | | | 068 | 18 | 7 | 180ATMK095 | 180RNDK095 | | *180SLHK095* 180VXLHK095 | | 180SFHK095 | |
| | | | 072 | 20 | 7 | 200ATMK095 | 200RNDK095 | | 200VXLHK095 | | 200SFHK095 | |
| | | | 084 | 24 | 7 | | 240RNDK095 | | | | | |
| | | | 093 | 28 | 7 | | 280RNDK095 | | | | | |

▲ See our guides for chainsaws with a **green triangle** on pages FOR 2–3

▲ See our guides for chainsaws with a **yellow triangle** on pages FOR 2–3

Saw chain complies with low kickback performance requirements (FOR 2–3)

Saw chain does not comply with low kickback performance requirements (FOR 2–3)

For information on our PowerSharp Kits see pages FOR 136–137

For Bar & Chain Combos see pages FOR 100–101

Part numbers printed in *red italics* have been obsoleted. Contact your authorized Oregon distributor for availability.

# Guide Bar & Saw Chain Applications



| Saw Chain | | | | Guide Bars | | | | | | | | | |
|---|---|---|---|---|---|---|---|---|---|---|---|---|---|
| | | | | | | DuraCut™ AT | PowerCut™ RN RW GN PM | SpeedCut™ TXL | VersaCut™ VXL | ControlCut™ PXL | AdvanceCut™ SF SX PX GD MLB | Single Rivet SD DG MLE |
| Pitch | Gauge | Chain Type | Drive Links | Bar Length | Drive Teeth | Armor Tip | PowerMatch® | Pro-Lite® MG MP | Pro-Lite® SLG SLH GL GP SP | Pro-Lite® SLB | Pro-Am® | DoubleGuard® |
| **Solo** ▲ | | | | | | | | | | | | |
| **603, 662, 665, 667, 670, 675, 680, 681, 690, 694...** | | | | | | | | | | | | |
| 3/8 | .050 | **AdvanceCut** 72V | **PowerCut** 72EXL, LGX, LPX **VersaCut** 72DPX | 060 | 16 | 8 | | 160RNDD009 | | 160VXLHDD009 | | | |
| | | | | 068 | 18 | 8 | *180ATMD009* | 180RNDD009 | | *180SLHD009* 180VXLHDD009 | | | |
| | | | | 072 | 20 | 8 | 200ATMD009 | 200RNDD009 | | 200VXLHDD009 | | 200SFHD009 | |
| | | | | 076 | 22 | 7 | | | | | | | |
| | | | | 084 | 24 | 8 | 240ATMD009 | 240RNDD009 | | | | 240SFHD009 | |
| | | | | 093 | 28 | 7 | | 280RNDD009 280RWDD009 | | | | | |
| | | | | 098 | 30 | 7 | | 300RNDD009 | | | | | |
| | | | | 105 | 32 | 7 | | 320RNDD009 320RWDD009 | | | | | |
| | .058 | **AdvanceCut** 73V | **PowerCut** 73EXL, LGX, LPX **VersaCut** 73DPX | 052 | 13 | 8 | | 138RNDD009 | | *138SLHD009* | | | |
| | | | | 056 | 15 | 8 | | | | 158VXLHDD009 | | | |
| | | | | 060 | 16 | 8 | 168ATMD009 | 168RNDD009 | | 168VXLHDD009 | | 168SFHD009 | |
| | | | | 068 | 18 | 8 | 188ATMD009 | 188RNDD009 | | 188VXLHDD009 | | 188SFHD009 | |
| | | | | 072 | 20 | 8 | 208ATMD009 | 208RNDD009 | | *208SLHD009* 208VXLHDD009 | | 208SFHD009 | |
| | | | | 076 | 22 | 7 | | 228RNDD009 | | | | | |
| | | | | 084 | 24 | 7 | 248ATMD009 | 248RNDD009 | | | | 248SFHD009 | |
| | | | | 089 | 26 | 8 | | 268RNDD009 | | | | | |
| | | | | 092 | 28 | 7 | 288ATMD009 | 288RNDD009 | | | | | |
| | | | | 102 | 30 | 8 | | 308RNDD009 | | | | | |
| | | | | 110 | 33 | 7 | | 338RWDD009 338PMDD009 | | | | | |
| | | | | 119 | 37 | 7 | | 378RWDD009 378PMDD009 | | | | | |
| | .063 | **AdvanceCut** 75V | **PowerCut** 75EXL, LGX, LPX **VersaCut** 75DPX | 072 | 20 | 7 | 203ATMD009 | 203RNDD009 | | | | | |
| | | | | 084 | 24 | 7 | 243ATMD009 | 243RNDD009 | | | | | |
| | | | | 093 | 28 | 7 | | 283RNDD009 283RWDD009 | | | | | |
| | | | | 098 | 30 | 7 | | | | | | | |
| | | | | 105 | 32 | 7 | | 323RNDD009 323RWDD009 | | | | | |
| | | | | 110 | 34 | 7 | | 343RNDD009 | | | | | |
| | | | | 115 | 36 | 7 | | 363RNDD009 363RWDD009 | | | | | |
| | | | | 119 | 37 | 7 | | | | | | | |
| | | | | 135 | 42 | 7 | | 423RNDD009 | | | | | |

See page FOR 142 for saw chain sharpening tools

* See page FOR 4 for important information on Guard Mate bar-nose tip guards

** See page FOR 4 for important information on Intenz guide bars.

† ANSI B175.1-2012 and CSA Standard Z62.3 regarding reduced kickback does not apply to pole saws or pruners

For the most current fit-up information visit **OregonProducts.com**

# Guide Bar & Saw Chain Applications



| Saw Chain | | | | Guide Bars | | | | | | | | |
|---|---|---|---|---|---|---|---|---|---|---|---|---|
| | | | | | | DuraCut™ AT | PowerCut™ RN RW GN PM | SpeedCut™ TXL | VersaCut™ VXL | ControlCut™ PXL | AdvanceCut™ SF SX PX GD MLB | Single Rivet SD DG MLE |
| Pitch | Gauge | Chain Type | Drive Links | Bar Length | Drive Teeth | Armor Tip | PowerMatch® | Pro-Lite® MG MP | Pro-Lite® SLG SLH GL GP SP | Pro-Lite® SLB | Pro-Am® | DoubleGuard® |

## Solo

| Pitch | Gauge | Chain Type | Drive Links | Bar Length | Drive Teeth | Armor Tip | PowerMatch® | Pro-Lite® MG MP | Pro-Lite® SLG SLH GL GP SP | Pro-Lite® SLB | Pro-Am® | DoubleGuard® |
|---|---|---|---|---|---|---|---|---|---|---|---|---|
| **...603, 662, 665, 667, 670, 675, 680, 681, 690, 694** | | | | | | | | | | | | |
| .404 | .058 | **PowerCut** 58L | 084 | 28 | 7 | | | | | | | |
| | | | 104 | 33 | 7 | | | | | | | |
| | .063 | **PowerCut** 59L, 68LX **VersaCut** 27X | 065 | 20 | 7 | | | | | | | |
| | | | 095 | 32 | 7 | | | | | | | |
| | | | 106 | 36 | 7 | | 363RNFD009 | | | | | |

## Stanley Hydraulic

| Pitch | Gauge | Chain Type | Drive Links | Bar Length | Drive Teeth | Armor Tip | PowerMatch® | Pro-Lite® MG MP | Pro-Lite® SLG SLH GL GP SP | Pro-Lite® SLB | Pro-Am® | DoubleGuard® |
|---|---|---|---|---|---|---|---|---|---|---|---|---|
| **CS05, CS06** | | | | | | | | | | | | |
| .325 | .050 | **ControlCut** 20BPX **PowerCut** 20LPX | 078 | 20 | 8 | | | | *200SLGK095* 200VXLGK095 | | | |
| | .058 | **ControlCut** 21BPX **PowerCut** 21LPX | 056 | 13 | 7 | | | | | *138SLBK095* 138PXLBK095 | | |
| | | | 064 | 15 | 7 | | 158RNBK095 | | | 158PXLBK095 | | |
| | | | 064 | 15 | 8 | | | | 158VXLGK095 | | | |
| | | | 066 | 16 | 7 | | | | 168VXLGK095 | *168SLBK095* 168PXLBK095 | 168PXBK095 168SFGK095 | |
| | | | 072 | 18 | 8 | | | | *188SLGK095* 188VXLGK095 | 188PXLBK095 | 188PXBK095 188SFGK095 | |
| | | | 078 | 20 | 7 | | 208RNBK095 | | *208SLGK095* 208VXLGK095 | | 208PXBK095 208SFGK095 | |
| | Narrow Kerf | | | | | | | | | | | |
| | .050 | *95VPX* **SpeedCut** 95TXL | 056 | 13 | 7 | | | *130MPBK095* 130TXLBK095 | | | 130MLBK095 | |
| | | | 064 | 15 | 7 | | | 150TXLBK095 | | | 150MLBK095 | |
| | | | 066 | 16 | 7 | | | *160MPBK095* 160TXLBK095 | | | 160MLBK095 | |
| | | | 072 | 18 | 7 | | | 180TXLBK095 | | | 180MLBK095 | |
| | | | 078 | 20 | 7 | | | 200TXLBK095 | | | | |
| 3/8 | .050 | **AdvanceCut** 72V **PowerCut** 72EXL, LGX, LPX **VersaCut** 72DPX | 059 | 16 | 7 | *160ATMZ095* | | | | | 160PXDK095 | |
| | | | 064 | 18 | 7 | *180ATMZ095* | | | | | | |
| | | | 070 | 20 | 7 | 200ATMZ095 | | | | | | |
| **CS04, CS07, CS23, CS26** | | | | | | | | | | | | |
| 3/8 | .050 | **AdvanceCut** 72V **PowerCut** 72EXL, LGX, LPX **VersaCut** 72DPX | 041 | 9 | 8 | | | | | | | |
| | | | 049 | 12 | 8 | | | | | | | |
| | | | 060 | 15 | 8 | | | | | | | |
| **CS11** | | | | | | | | | | | | |
| 3/8 | .050 | **AdvanceCut** 72V **PowerCut** 72EXL, LGX, LPX **VersaCut** 72DPX | 082 | 24 | 8 | | 240RNDD196 | | | | | |
| | | | 093 | 27 | 8 | | *270GNDD196* | | | | | |
| | | | 098 | 30 | 8 | | | | | | | |
| | | | 117 | 36 | 8 | | | | | | | |
| | | | 135 | 43 | 8 | | | | | | | |

See our guides for chainsaws with a **green triangle** on pages FOR 2–3

See our guides for chainsaws with a **yellow triangle** on pages FOR 2–3

Saw chain complies with low kickback performance requirements (FOR 2–3)

Saw chain does not comply with low kickback performance requirements (FOR 2–3)

For information on our PowerSharp Kits see pages FOR 136–137

For Bar & Chain Combos see pages FOR 100–101

Part numbers printed in *red italics* have been obsoleted. Contact your authorized Oregon distributor for availability.

# Guide Bar & Saw Chain Applications



| Saw Chain | | | | Guide Bars | | | | | | | | | |
|---|---|---|---|---|---|---|---|---|---|---|---|---|---|
| | | | | | | DuraCut™ AT | PowerCut™ RN RW GN PM | SpeedCut™ TXL | VersaCut™ VXL | ControlCut™ PXL | AdvanceCut™ SF SX PX GD MLB | Single Rivet SD DG MLE |
| Pitch | Gauge | Chain Type | Drive Links | Bar Length | Drive Teeth | Armor Tip | PowerMatch® | Pro-Lite® MG MP | Pro-Lite® SLG SLH GL GP SP | Pro-Lite® SLB | Pro-Am® | DoubleGuard® |

## Stihl

**009, 009L, 010, 011, 012, 015, 017, 018, 018C, 019, 019T, 020, 020 Super, 020T, 023, 023C, 023L, E 10, E 14, E 140, E 180, E 180C, MS 170, MS 171, MS 180 C, MS 180 C-B, MS 180 C-BE, MS 181, MS 181C, MS 181C-BE, MS 190T, MS 191 T, MS 192C, MS 192C-E, MS 192 T, MS 192TC, MS 192 T C-E, MS 193, MS 193 T, MS 200, MS 200 T, MS 201C, MS 201 C-E, MS 201 C-EM, MS 201T, MS 201 TC-M, MS 210, MS 210 C, MS 210 C-BE, MS 211, MS 211C, MS 211 C-BE, MS 220, MS 220 Q, MSE 140, MSE 140 C, MSE 140 C-BQ, MSE 170 C-BQ, MSE 180, MSE 180 C, MSE 180 C-BQ, MSE 200, MSE 210 C-BQ** — PowerSharp® Compatible

| | | | | | | | | | | | | | |
|---|---|---|---|---|---|---|---|---|---|---|---|---|---|
| 3/8 low profile | .050 | ControlCut 91PXL AdvanceCut 91PX | VersaCut 91VXL | 044 | 12 | 6 | | | | *120SPEA074* | | 120SXEA074 | 120SDEA074 |
| | | | | 050 | 14 | 6 | | | | *140SPEA074* | | 140SXEA074 | 140SDEA074 |
| | | | | 055 | 16 | 6 | | | | *160SPEA074* | | 160SXEA074 | 160SDEA074 |
| | .043 | AdvanceCut 90PX | | 044 | 12 | 6 | | | | | | | 124MLEA074 |
| | | | | 050 | 14 | 6 | | | | | | | 144MLEA074 |
| | | | | 055 | 16 | 6 | | | | | | | 164MLEA074 |

**Pole Pruner† Models: HT 70, HT 73, HT 75, HT 100, HT 101, HT 130, HT 131, HT 250, HT-KM; Some pole pruners may take 1/4" pitch chain.**

| | | | | | | | | | | | | | |
|---|---|---|---|---|---|---|---|---|---|---|---|---|---|
| 3/8 low profile | .050 | ControlCut 91PXL AdvanceCut 91PX | VersaCut 91VXL | 044 | 12 | 6 | | | | *120SPEA074* | | 120SXEA074 | 120SDEA074 |
| | | | | 050 | 14 | 6 | | | | *140SPEA074* | | 140SXEA074 | 140SDEA074 |
| | | | | 055 | 16 | 6 | | | | | | 160SXEA074 | 160SDEA074 |
| | .043 | AdvanceCut 90PX | | 044 | 12 | 6 | | | | | | | 124MLEA074 |
| | | | | 050 | 14 | 6 | | | | | | | 144MLEA074 |
| | | | | 055 | 16 | 6 | | | | | | | 164MLEA074 |

**021, 025, 025C, MS 230, MS 230C, MS 230 C-BE, MS 241 C-M, MS 250, MS 250 C, MS 250 C-BE, MS 251, MS 251C, MS 251 C-BE**

| | | | | | | | | | | | | | |
|---|---|---|---|---|---|---|---|---|---|---|---|---|---|
| 3/8 low profile | .050 | ControlCut 91PXL AdvanceCut 91PX | VersaCut 91VXL | 044 | 12 | 6 | | | | *120SPEA074* | | 120SXEA074 | 120SDEA074 |
| | | | | 050 | 14 | 6 | | | | *140SPEA074* | | 140SXEA074 | 140SDEA074 |
| | | | | 055 | 16 | 6 | | | | | | 160SXEA074 | 160SDEA074 |
| .325 | .050 | ControlCut 20BPX | PowerCut 20LPX | 062 | 16 | 7 | | | | | 160PXLBA074 | | |
| | | | | 068 | 18 | 7 | | | | | | | |
| | .063 | ControlCut 22BPX | PowerCut 22LPX | 062 | 16 | 7 | | | | | *163SLBA074* 163PXLBA074 | 163PXBA074 | |
| | | | | 068 | 18 | 7 | | | | | *183SLBA074* 183PXLBA074 | 183PXBA074 | |
| | Narrow Kerf | | | | | | | | | | | | |
| | .050 | *95VPX* | SpeedCut 95TXL | 062 | 16 | 7 | | | *160MPBA074* 160TXLBA074 | | | | |
| | | | | 068 | 18 | 7 | | | *180MPBA074* 180TXLBA074 | | | | |

**MS 270, MS 270 C, MS 270 C-B, MS 270 C-QS, MS 271, MS 280, MS 280 C-BQ, MS 280 C-QS, MS 291, MS 291 C-BEQ...**

| | | | | | | | | | | | | | |
|---|---|---|---|---|---|---|---|---|---|---|---|---|---|
| .325 | .050 | ControlCut 20BPX | PowerCut 20LPX | 067 | 16 | 7 | 160ATMD025 | | | 160VXLGD025 | | | |
| | | | | 074 | 18 | 8 | 180ATMD025 | | | *180SLGD025* 180VXLGD025 | | | |
| | | | | 081 | 20 | 8 | 200ATMD025 | | | | | | |

See page FOR 142 for saw chain sharpening tools

* See page FOR 4 for important information on Guard Mate bar-nose tip guards

** See page FOR 4 for important information on Intenz guide bars.

† ANSI B175.1-2012 and CSA Standard Z62.3 regarding reduced kickback does not apply to pole saws or pruners

For the most current fit-up information visit **OregonProducts.com**

# Guide Bar & Saw Chain Applications



| Saw Chain | | | | Guide Bars | | | | | | | | | |
|---|---|---|---|---|---|---|---|---|---|---|---|---|---|
| | | | | | | DuraCut™ AT | PowerCut™ RN RW GN PM | SpeedCut™ TXL | VersaCut™ VXL | ControlCut™ PXL | AdvanceCut™ SF SX PX GD MLB | Single Rivet SD DG MLE |
| Pitch | Gauge | Chain Type | Drive Links | Bar Length | Drive Teeth | Armor Tip | PowerMatch® | Pro-Lite® MG MP | Pro-Lite® SLG SLH GL GP SP | Pro-Lite® SLB | Pro-Am® | DoubleGuard® |

## Stihl

### ...MS 270, MS 270 C, MS 270 C-B, MS 270 C-QS, MS 271, MS 280, MS 280 C-BQ, MS 280 C-QS, MS 291, MS 291 C-BEQ

| Pitch | Gauge | Chain Type | | Drive Links | Bar Length | Drive Teeth | Armor Tip | PowerMatch® | Pro-Lite® MG MP | Pro-Lite® SLG SLH GL GP SP | Pro-Lite® SLB | Pro-Am® | DoubleGuard® |
|---|---|---|---|---|---|---|---|---|---|---|---|---|---|
| .325 | .063 | ControlCut 22BPX | PowerCut 22LPX | 056 | 13 | 7 | | | | | | | |
| | | | | 063 | 15 | 8 | | | | 153VXLGD025 | | | |
| | | | | 067 | 16 | 7 | 163ATMD025 | 163RNBD025 | | 163VXLGD025 | | 163SFGD025 | |
| | | | | 074 | 18 | 8 | 183ATMD025 | 183RNBD025 | | *183SLGD025* 183VXLGD025 | | 183SFGD025 | |
| | | | | 081 | 20 | 7 | 203ATMDO25 | | | 203SLGDO25 | | 203SFGD025 | |
| | Narrow Kerf | | | | | | | | | | | | |
| | .050 | *95VPX* | SpeedCut 95TXL | 067 | 16 | 7 | | | 160TXLGD025 | | | | |
| | | | | 074 | 18 | 8 | | | *180MPGD025* 180TXLGD025 | | | | |

### 026, 026 Pro, 028, 028 Super, 029, 030, 031, 032, 034, 034 Super, 036, 036P, 036 QS, 041, MS 260, MS 260 Pro, MS 261, MS 261 C-M, MS 261 C-Q, MS 261 C-MQ, MS 290, MS 310, MS 341, MS 360, MS 360 C, MS 360 Pro, MS 360 Q-S, MS 361, MS 361 C, MS 361 C-B, MS 361 C-Q

| Pitch | Gauge | Chain Type | | Drive Links | Bar Length | Drive Teeth | Armor Tip | PowerMatch® | Pro-Lite® MG MP | Pro-Lite® SLG SLH GL GP SP | Pro-Lite® SLB | Pro-Am® | DoubleGuard® |
|---|---|---|---|---|---|---|---|---|---|---|---|---|---|
| | .050 | ControlCut 20BPX | PowerCut 20LPX | 067 | 16 | 7 | 160ATMD025 | | | 160VXLGD025 | | | |
| | | | | 074 | 18 | 8 | 180ATMD025 | | | *180SLGD025* 180VXLGD025 | | | |
| | | | | 081 | 20 | 8 | 200ATMD025 | | | | | | |
| .325 | .063 | ControlCut 22BPX | PowerCut 22LPX | 056 | 13 | 7 | | | | | | | |
| | | | | 063 | 15 | 8 | | | | 153VXLGD025 | | | |
| | | | | 067 | 16 | 7 | 163ATMD025 | 163RNBD025 | | 163VXLGD025 | | 163SFGD025 | |
| | | | | 074 | 18 | 8 | 183ATMD025 | 183RNBD025 | | *183SLGD025* 183VXLGD025 | | 183SFGD025 | |
| | | | | 081 | 20 | 7 | 203ATMDO25 | | | 203SLGDO25 | | 203SFGD025 | |
| | Narrow Kerf | | | | | | | | | | | | |
| | .050 | *95VPX* | SpeedCut 95TXL | 067 | 16 | 7 | | | 160TXLGD025 | | | | |
| | | | | 074 | 18 | 8 | | | *180MPGD025* 180TXLGD025 | | | | |
| 3/8 | .050 | AdvanceCut 72V | PowerCut 72EXL, LGX, LPX VersaCut 72DPX | 060 | 16 | 8 | 160ATMD025 | 160RNDD025 | | 160VXLHD025 | | 160SFHD025 | |
| | | | | 066 | 18 | 8 | 180ATMD025 | 180RNDD025 | | *180SLHD025* 180VXLHD025 | | | |
| | | | | 072 | 20 | 8 | 200ATMD025 | 200RNDD025 | | *200SLHD025* 200VXLHD025 | | 200SFHD025 | |
| | | | | 084 | 24 | 7 | 240ATMD025 | 240RNDD025 | | *240SLHD025* 240VXLHD025 | | 240SFHD025 | |
| | .063 | AdvanceCut 75V | PowerCut 75EXL, LGX, LPX VersaCut 75DPX | 060 | 16 | 8 | 163ATMD025 | 163RNDD025 | | *163SLHD025* 163VXLHD025 | | 163SFHD025 | |
| | | | | 066 | 18 | 8 | 183ATMD025 | 183RNDD025 | | 183VXLHD025 | | 183SFHD025 | |
| | | | | 072 | 20 | 8 | 203ATMD025 | 203RNDD025 | | 203VXLHD025 | | 203SFHD025 | |
| | | | | 077 | 22 | 8 | | 223RNDD025 | | | | | |
| | | | | 084 | 24 | 7 | 243ATMD025 | 243RNDD025 | | *243SLHD025* 243VXLHD025 | | 243SFHD025 | |

See our guides for chainsaws with a **green triangle** on pages FOR 2–3

See our guides for chainsaws with a **yellow triangle** on pages FOR 2–3

Saw chain complies with low kickback performance requirements (FOR 2–3)

Saw chain does not comply with low kickback performance requirements (FOR 2–3)

For information on our PowerSharp Kits see pages FOR 136–137

For Bar & Chain Combos see pages FOR 100–101

Part numbers printed in *red italics* have been obsoleted. Contact your authorized Oregon distributor for availability.

# Guide Bar & Saw Chain Applications



**Saw Chain** | **Guide Bars**

| Pitch | Gauge | Chain Type | Drive Links | Bar Length | Drive Teeth | DuraCut™ AT | PowerCut™ RN RW GN PM | SpeedCut™ TXL | VersaCut™ VXL | ControlCut™ PXL | AdvanceCut™ SF SX PX GD MLB | Single Rivet SD DG MLE |
|---|---|---|---|---|---|---|---|---|---|---|---|---|
| | | | | | | Armor Tip | PowerMatch® | Pro-Lite® MG MP | Pro-Lite® SLG SLH GL GP SP | Pro-Lite® SLB | Pro-Am® | DoubleGuard® |

## Stihl

**E 20, E 220, MS 311, MS 362, MS 362 C-M, MS 362 C-MQ, MS 362 C-Q, MSE 220, MSE 250 C...**

| Pitch | Gauge | Chain Type | | Drive Links | Bar Length | Drive Teeth | Armor Tip | PowerMatch® | Pro-Lite® MG MP | Pro-Lite® SLG SLH GL GP SP | Pro-Lite® SLB | Pro-Am® | DoubleGuard® |
|---|---|---|---|---|---|---|---|---|---|---|---|---|---|
| 3/8 | .050 | **AdvanceCut** 72V | **PowerCut** 72EXL, LGX, LPX **VersaCut** 72DPX | 060 | 16 | 8 | 160ATMD025 | 160RNDD025 | | 160VXLHD025 | | 160SFHD025 | |
| | | | | 066 | 18 | 8 | 180ATMD025 | 180RNDD025 | | *180SLHD025* 180VXLHD025 | | | |
| | | | | 072 | 20 | 8 | 200ATMD025 | 200RNDD025 | | *200SLHD025* 200VXLHD025 | | 200SFHD025 | |
| | .063 | **AdvanceCut** 75V | **PowerCut** 75EXL, LGX, LPX **VersaCut** 75DPX | 060 | 16 | 8 | 163ATMD025 | 163RNDD025 | | *163SLHD025* 163VXLHD025 | | 163SFHD025 | |
| | | | | 066 | 18 | 8 | 183ATMD025 | 183RNDD025 | | 183VXLHD025 | | 183SFHD025 | |
| | | | | 072 | 20 | 8 | 203ATMD025 | 203RNDD025 | | 203VXLHD025 | | 203SFHD025 | |

## Stihl

**039, 048, MS 390, MS 391**

| Pitch | Gauge | Chain Type | | Drive Links | Bar Length | Drive Teeth | Armor Tip | PowerMatch® | Pro-Lite® MG MP | Pro-Lite® SLG SLH GL GP SP | Pro-Lite® SLB | Pro-Am® | DoubleGuard® |
|---|---|---|---|---|---|---|---|---|---|---|---|---|---|
| 3/8 | .050 | **AdvanceCut** 72V | **PowerCut** 72EXL, LGX, LPX **VersaCut** 72DPX | 060 | 16 | 8 | 160ATMD025 | 160RNDD025 | | 160VXLHD025 | | 160SFHD025 | |
| | | | | 066 | 18 | 8 | 180ATMD025 | 180RNDD025 | | *180SLHD025* 180VXLHD025 | | | |
| | | | | 072 | 20 | 8 | 200ATMD025 | 200RNDD025 | | *200SLHD025* 200VXLHD025 | | 200SFHD025 | |
| | | | | 084 | 24 | 7 | 240ATMD025 | 240RNDD025 | | *240SLHD025* 240VXLHD025 | | 240SFHD025 | |
| | .063 | **AdvanceCut** 75V | **PowerCut** 75EXL, LGX, LPX **VersaCut** 75DPX | 060 | 16 | 8 | 163ATMD025 | 163RNDD025 | | *163SLHD025* 163VXLHD025 | | 163SFHD025 | |
| | | | | 066 | 18 | 8 | 183ATMD025 | 183RNDD025 | | 183VXLHD025 | | 183SFHD025 | |
| | | | | 072 | 20 | 8 | 203ATMD025 | 203RNDD025 | | 203VXLHD025 | | 203SFHD025 | |
| | | | | 077 | 22 | 8 | | 223RNDD025 | | | | | |
| | | | | 084 | 24 | 7 | 243ATMD025 | 243RNDD025 | | *243SLHD025* 243VXLHD025 | | 243SFHD025 | |

**038, 038 Super Magnum, 042, 044, 044M, 045, 046, 046M, MS 440, MS 440 Magnum, MS 441, MS 441 C, MS 441 C-M, MS 441 C-MQ, MS 441 R C-M, MS 460, MS 460 Magnum, MS 461...**

| Pitch | Gauge | Chain Type | | Drive Links | Bar Length | Drive Teeth | Armor Tip | PowerMatch® | Pro-Lite® MG MP | Pro-Lite® SLG SLH GL GP SP | Pro-Lite® SLB | Pro-Am® | DoubleGuard® |
|---|---|---|---|---|---|---|---|---|---|---|---|---|---|
| 3/8 | .050 | **AdvanceCut** 72V | **PowerCut** 72EXL, LGX, LPX **VersaCut** 72DPX | 060 | 16 | 8 | 160ATMD025 | 160RNDD025 | | 160VXLHD025 | | 160SFHD025 | |
| | | | | 066 | 18 | 8 | 180ATMD025 | 180RNDD025 | | *180SLHD025* 180VXLHD025 | | | |
| | | | | 072 | 20 | 8 | 200ATMD025 | 200RNDD025 | | *200SLHD025* 200VXLHD025 | | 200SFHD025 | |
| | | | | 084 | 24 | 7 | 240ATMD025 | 240RNDD025 | | *240SLHD025* 240VXLHD025 | | 240SFHD025 | |
| | | | | 091 | 28 | 8 | | 280RNDD025 | | | | | |
| | | | | 091 | 28 | 7 | | 280RWDD025 | | | | | |
| | | | | 098 | 30 | 7 | | 300RNDD025 | | | | | |
| | | | | 105 | 32 | 7 | | 320RNDD025 320RWDD025 | | | | | |
| | | | | 114 | 36 | 7 | | | | | | | |

See page FOR 142 for saw chain sharpening tools

* See page FOR 4 for important information on Guard Mate bar-nose tip guards

** See page FOR 4 for important information on Intenz guide bars.

† ANSI B175.1-2012 and CSA Standard Z62.3 regarding reduced kickback does not apply to pole saws or pruners

For the most current fit-up information visit **OregonProducts.com**

# Guide Bar & Saw Chain Applications



| Saw Chain | | | | Guide Bars | | | | | | | | | |
|---|---|---|---|---|---|---|---|---|---|---|---|---|---|
| | | | | | | DuraCut™ | PowerCut™ | SpeedCut™ | VersaCut™ | ControlCut™ | AdvanceCut™ | Single Rivet | |
| | | | | | | AT | RN RW GN PM | TXL | VXL | PXL | SF SX PX GD MLB | SD DG MLE | |
| Pitch | Gauge | Chain Type | Drive Links | Bar Length | Drive Teeth | Armor Tip | PowerMatch® | Pro-Lite® MG MP | Pro-Lite® SLG SLH GL GP SP | Pro-Lite® SLB | Pro-Am® | DoubleGuard® | |

## Stihl

**...038, 038 Super Magnum, 042, 044, 044M, 045, 046, 046M, MS 440, MS 440 Magnum, MS 441, MS 441 C, MS 441 C-M, MS 441 C-MQ, MS 441 R C-M, MS 460, MS 460 Magnum, MS 461**

| Pitch | Gauge | Chain Type | | Drive Links | Bar Length | Drive Teeth | Armor Tip | PowerMatch® | Pro-Lite® MG MP | Pro-Lite® SLG SLH GL GP SP | Pro-Lite® SLB | Pro-Am® | DoubleGuard® |
|---|---|---|---|---|---|---|---|---|---|---|---|---|---|
| 3/8 | .063 | **AdvanceCut** 75V | **PowerCut** 75EXL, LGX, LPX **VersaCut** 75DPX | 060 | 16 | 8 | 163ATMD025 | 163RNDD025 | | *163SLHD025* 163VXLHD025 | | 163SFHD025 | |
| | | | | 066 | 18 | 8 | 183ATMD025 | 183RNDD025 | | 183VXLHD025 | | 183SFHD025 | |
| | | | | 072 | 20 | 8 | 203ATMD025 | 203RNDD025 | | 203VXLHD025 | | 203SFHD025 | |
| | | | | 077 | 22 | 8 | | 223RNDD025 | | | | | |
| | | | | 084 | 24 | 7 | 243ATMD025 | 243RNDD025 | | *243SLHD025* 243VXLHD025 | | 243SFHD025 | |
| | | | | 092 | 28 | 8 | | 283RNDD025 | | | | | |
| | | | | 091 | 28 | 7 | | 283RWDD025 | | | | | |
| | | | | 098 | 30 | 7 | | 303RNDD025 | | | | | |
| | | | | 106 | 32 | 8 | | 323RNDD025 323RWDD025 323PMDD025 | | | | | |
| | | | | 110 | 34 | 7 | | 343RNDD025 | | | | | |
| | | | | 114 | 36 | 7 | | 363RNDD025 363PMDD025 363RWDD025 | | | | | |
| | | | | 135 | 42 | 7 | | 423RNDD025 | | | | | |

**056, 064, 066, 066 Magnum, MS 650, MS 660, MS 661 C-M, MS 661 RC-M...**

| Pitch | Gauge | Chain Type | | Drive Links | Bar Length | Drive Teeth | Armor Tip | PowerMatch® | Pro-Lite® MG MP | Pro-Lite® SLG SLH GL GP SP | Pro-Lite® SLB | Pro-Am® | DoubleGuard® |
|---|---|---|---|---|---|---|---|---|---|---|---|---|---|
| 3/8 | .050 | **AdvanceCut** 72V | **PowerCut** 72EXL, LGX, LPX **VersaCut** 72DPX | 060 | 16 | 8 | 160ATMD025 | 160RNDD025 | | 160VXLHD025 | | 160SFHD025 | |
| | | | | 066 | 18 | 8 | 180ATMD025 | 180RNDD025 | | *180SLHD025* 180VXLHD025 | | | |
| | | | | 072 | 20 | 8 | 200ATMD025 | 200RNDD025 | | *200SLHD025* 200VXLHD025 | | 200SFHD025 | |
| | | | | 084 | 24 | 7 | 240ATMD025 | 240RNDD025 | | *240SLHD025* 240VXLHD025 | | 240SFHD025 | |
| | | | | 091 | 28 | 8 | | 280RNDD025 | | | | | |
| | | | | 091 | 28 | 7 | | 280RWDD025 | | | | | |
| | | | | 098 | 30 | 7 | | 300RNDD025 | | | | | |
| | | | | 105 | 32 | 7 | | 320RNDD025 320RWDD025 | | | | | |
| | | | | 114 | 36 | 7 | | | | | | | |

See our guides for chainsaws with a **green triangle** on pages FOR 2–3

See our guides for chainsaws with a **yellow triangle** on pages FOR 2–3

Saw chain complies with low kickback performance requirements (FOR 2–3)

Saw chain does not comply with low kickback performance requirements (FOR 2–3)

For information on our PowerSharp Kits see pages FOR 136–137

For Bar & Chain Combos see pages FOR 100–101

Part numbers printed in *red italics* have been obsoleted. Contact your authorized Oregon distributor for availability.

# Guide Bar & Saw Chain Applications



| Saw Chain | | | | Guide Bars | | | | | | | | | |
|---|---|---|---|---|---|---|---|---|---|---|---|---|---|
| | | | | | | DuraCut™ AT | PowerCut™ RN RW GN PM | SpeedCut™ TXL | VersaCut™ VXL | ControlCut™ PXL | AdvanceCut™ SF SX PX GD MLB | Single Rivet SD DG MLE |
| Pitch | Gauge | Chain Type | Drive Links | Bar Length | Drive Teeth | Armor Tip | PowerMatch® | Pro-Lite® MG MP | Pro-Lite® SLG SLH GL GP SP | Pro-Lite® SLB | Pro-Am® | DoubleGuard® |

## Stihl

**...056, 064, 066, 066 Magnum, MS 650, MS 660, MS 661 C-M, MS 661 RC-M**

| | | | | | | | | | | | | | |
|---|---|---|---|---|---|---|---|---|---|---|---|---|---|
| 3/8 | .063 | **AdvanceCut** 75V | **PowerCut** 75EXL, LGX, LPX **VersaCut** 75DPX | 060 | 16 | 8 | 163ATMD025 | 163RNDD025 | | *163SLHD025* 163VXLHD025 | | 163SFHD025 | |
| | | | | 066 | 18 | 8 | 183ATMD025 | 183RNDD025 | | 183VXLHD025 | | 183SFHD025 | |
| | | | | 072 | 20 | 8 | 203ATMD025 | 203RNDD025 | | 203VXLHD025 | | 203SFHD025 | |
| | | | | 077 | 22 | 8 | | 223RNDD025 | | | | | |
| | | | | 084 | 24 | 7 | 243ATMD025 | 243RNDD025 | | *243SLHD025* 243VXLHD025 | | 243SFHD025 | |
| | | | | 092 | 28 | 8 | | 283RNDD025 | | | | | |
| | | | | 091 | 28 | 7 | | 283RWDD025 | | | | | |
| | | | | 098 | 30 | 7 | | 303RNDD025 | | | | | |
| | | | | 105 | 32 | 7 | | 323RNDD025<br>323RWDD025<br>323PMDD025 | | | | | |
| | | | | 110 | 34 | 7 | | 343RNDD025 | | | | | |
| | | | | 114 | 36 | 7 | | 363RNDD025<br>363PMDD025<br>363RWDD025 | | | | | |
| | | | | 135 | 42 | 7 | | 423RNDD025 | | | | | |
| .404 | .063 | | **PowerCut** 59L, 68LX **VersaCut** 27X | 065 | 20 | 7 | | | | | | | |
| | | | | 083 | 28 | 7 | | | | | | | |
| | | | | 095 | 32 | 7 | | 323RNFD025 | | | | | |
| | | | | 104 | 36 | 7 | | | | | | | |

**08SEQ, 050, 051, 075, 076, 078, 084, 088, 088M, E 30, MS 880, MS 880 Magnum, MS 880 R, S 10; Some saws may take 3/8" pitch chain.**

| | | | | | | | | | | | | | |
|---|---|---|---|---|---|---|---|---|---|---|---|---|---|
| .404 | .063 | | **PowerCut** 59L, 68LX **VersaCut** 27X | 068 | 21 | 7 | | 213RNFE031 | | | | | |
| | | | | 080 | 25 | 7 | | 253RNFE031 | | | | | |
| | | | | 095 | 32 | 7 | | | | | | | |
| | | | | 099 | 33 | 7 | | | | | | | |

## Sun Joe

**Pole Saws: SWJ800E, SWJ802E, iON8PS**

| | | | | | | | | | | | | | |
|---|---|---|---|---|---|---|---|---|---|---|---|---|---|
| 3/8 low profile | .050 | **ControlCut** 91PXL **AdvanceCut** 91PX | **VersaCut** 91VXL | 033 | 8 | | | | | | | | 080SDEA041 |

**SWJ803E**

| | | | | | | | | | | | | | |
|---|---|---|---|---|---|---|---|---|---|---|---|---|---|
| 3/8 low profile | .050 | **ControlCut** 91PXL **AdvanceCut** 91PX | **VersaCut** 91VXL | 040 | 10 | | | | | | | | 100SDEA041 |

**SWJ698E**

| | | | | | | | | | | | | | |
|---|---|---|---|---|---|---|---|---|---|---|---|---|---|
| 3/8 low profile | .050 | **ControlCut** 91PXL **AdvanceCut** 91PX | **VersaCut** 91VXL | 045 | 12 | | | | | | | 120SXEA041 | 120SDEA041 |

See page FOR 142 for saw chain sharpening tools

* See page FOR 4 for important information on Guard Mate bar-nose tip guards

** See page FOR 4 for important information on Intenz guide bars.

† ANSI B175.1-2012 and CSA Standard Z62.3 regarding reduced kickback does not apply to pole saws or pruners

For the most current fit-up information visit **OregonProducts.com**

# Guide Bar & Saw Chain Applications



| Saw Chain | | | | Guide Bars | | | | | | | | | |
|---|---|---|---|---|---|---|---|---|---|---|---|---|---|
| | | | | | | DuraCut™ AT | PowerCut™ RN RW GN PM | SpeedCut™ TXL | VersaCut™ VXL | ControlCut™ PXL | AdvanceCut™ SF SX PX GD MLB | Single Rivet SD DG MLE |
| Pitch | Gauge | Chain Type | Drive Links | Bar Length | Drive Teeth | Armor Tip | PowerMatch® | Pro-Lite® MG MP | Pro-Lite® SLG SLH GL GP SP | Pro-Lite® SLB | Pro-Am® | DoubleGuard® |

## Sun Joe

| Pitch | Gauge | Chain Type | Chain Type | Drive Links | Bar Length | Drive Teeth | Armor Tip | PowerMatch® | Pro-Lite® MG MP | Pro-Lite® SLG SLH GL GP SP | Pro-Lite® SLB | Pro-Am® | DoubleGuard® |
|---|---|---|---|---|---|---|---|---|---|---|---|---|---|
| **SWJ699E** | | | | | | | | | | | | | |
| 3/8 low profile | .050 | **ControlCut** 91PXL **AdvanceCut** 91PX | **VersaCut** 91VXL | 052 | 14 | | | | | | | 140SXEA041 | 140SDEA041 |
| **SWJ700E** | | | | | | | | | | | | | |
| 3/8 low profile | .050 | **ControlCut** 91PXL **AdvanceCut** 91PX | **VersaCut** 91VXL | 056 | 16 | 6 | | | | | | 160SXEA041 | 160SDEA041 |
| | | | | 057 | 16 | 6 | Original Equipment Guide Bar | | | | | | |
| **iON16CS** | | | | | | | | | | | | | |
| 3/8 low profile | .050 | **ControlCut** 91PXL **AdvanceCut** 91PX | **VersaCut** 91VXL | 056 | 16 | 6 | | | | | | 160SXEA041 | 160SDEA041 |
| **SWJ701E** | | | | | | | | | | | | | |
| 3/8 low profile | .050 | **ControlCut** 91PXL **AdvanceCut** 91PX | **VersaCut** 91VXL | 062 | 18 | | | | | | | | 180SDEA041 |

## Tanaka

**ECS-35, ECS-290, ECS-300, ECS-320, ECS-330, ECS-350, ECS-351, ECS-355, ECS-356, ECS-370, ECS-405, ECS-3301, ECS-3351, ECS-3401, ECS-3500, TCS-33EB, TCS-3301PFS, TCS-3351PFS, TCS-3401** — PowerSharp® Compatible

| Pitch | Gauge | Chain Type | Chain Type | Drive Links | Bar Length | Drive Teeth | Armor Tip | PowerMatch® | Pro-Lite® MG MP | Pro-Lite® SLG SLH GL GP SP | Pro-Lite® SLB | Pro-Am® | DoubleGuard® |
|---|---|---|---|---|---|---|---|---|---|---|---|---|---|
| | .050 | **ControlCut** 91PXL **AdvanceCut** 91PX | **VersaCut** 91VXL | 045 | 12 | 6 | | | | *120SPEA041* | | 120SXEA041 | 120SDEA041 |
| | | | | 052 | 14 | 6 | | | | | | 140SXEA041 | 140SDEA041 |
| | | | | 057 | 16 | 6 | | | | | | 160SXEA041 | 160SDEA041 |
| | | | | 062 | 18 | 6 | | | | | | | 180SDEA041 |
| | Intenz® ** | | | | | | | | | | | | |
| 3/8 low profile | .050 | **ControlCut** 91PXL **AdvanceCut** 91PX | **VersaCut** 91VXL | 045 | 12 | 6 | | | | *120SPET041* | | | |
| | | | | 052 | 14 | 6 | | | | *140SPET041* | | | 140SDET041 |
| | | | | 057 | 16 | 6 | | | | *160SPET041* | | | 160SDET041 |
| | | | | 062 | 18 | 6 | | | | | | | 180SDET041 |
| | .043 | **AdvanceCut** 90PX | | 045 | 12 | 6 | | | | | | | 124MLEA041 |
| | | | | 052 | 14 | 6 | | | | | | | 144MLEA041 |
| | | | | 057 | 16 | 6 | | | | | | | *164MLEA041* |
| **TCS-EDTP** | | | | | | | | | | | | | |
| | .050 | **ControlCut** 91PXL **AdvanceCut** 91PX | **VersaCut** 91VXL | 045 | 12 | 6 | | | | *120SPEA041* | | 120SXEA041 | 120SDEA041 |
| | | | | 052 | 14 | 6 | | | | | | 140SXEA041 | 140SDEA041 |
| 3/8 low profile | Intenz ** | | | | | | | | | | | | |
| | .050 | **ControlCut** 91PXL **AdvanceCut** 91PX | **VersaCut** 91VXL | 045 | 12 | 6 | | | | *120SPET041* | | | |
| | | | | 052 | 14 | 6 | | | | *140SPET041* | | | 140SDET041 |

See our guides for chainsaws with a **green triangle** on pages FOR 2–3

See our guides for chainsaws with a **yellow triangle** on pages FOR 2–3

Saw chain complies with low kickback performance requirements (FOR 2–3)

Saw chain does not comply with low kickback performance requirements (FOR 2–3)

For information on our PowerSharp Kits see pages FOR 136–137

For Bar & Chain Combos see pages FOR 100–101

Part numbers printed in *red italics* have been obsoleted. Contact your authorized Oregon distributor for availability.

# Guide Bar & Saw Chain Applications



| Saw Chain | | | | Guide Bars | | | | | | | | | |
|---|---|---|---|---|---|---|---|---|---|---|---|---|---|
| | | | | | | | DuraCut™ AT | PowerCut™ RN RW GN PM | SpeedCut™ TXL | VersaCut™ VXL | ControlCut™ PXL | AdvanceCut™ SF SX PX GD MLB | Single Rivet SD DG MLE |
| Pitch | Gauge | Chain Type | Drive Links | Bar Length | Drive Teeth | Armor Tip | PowerMatch® | Pro-Lite® MG MP | Pro-Lite® SLG SLH GL GP SP | Pro-Lite® SLB | Pro-Am® | DoubleGuard® | |
| **Tanaka** | | | | | | | | | | | | | |
| **ECS-505, ECS-506** | | | | | | | | | | | | | |
| 3/8 | .050 | **AdvanceCut** 72V | **PowerCut** 72EXL, LGX, LPX **VersaCut** 72DPX | 060 | 16 | 7 | *160ATMD176* | 160RNDD176 | | 160VXLHD176 | | 160PXDD176 | |
| | | | | 064 | 18 | 7 | | | | 180VXLHD176 | | | |
| | | | | 066 | 18 | 7 | | 180RNDD176 | | | | 180PXDD176 | |
| | | | | 070 | 20 | 7 | 200ATMD176 | 200RNDD176 | | 200VXLHD176 | | 200PXDD176 | |
| | | | | 081 | 24 | 7 | | 240RNDD176 | | | | | |
| | | | | 093 | 27 | 7 | | | | | | | |
| | | | | 092 | 28 | 7 | | 280RNDD176 | | | | | |
| **Pruner Models†: TPS-200 (Attachment), TPS-210, TPS-250, TPS-250PF, TPS-270, TPS-270PF, TPS-2501, TPS-2510** | | | | | | | | | | | | | |
| 3/8 low profile | .043 | **AdvanceCut** 90PX | | 040 | 10 | 6 | | | | | | | |
| | | | | 045 | 12 | 6 | | | | | | | 124MLEA041 |
| **ECS-415, ECS-4000, ECS-4000B, ECV-4501, TCS40EA, TCS51EAP** | | | | | | | | | | | | | |
| | .050 | **ControlCut** 20BPX | **PowerCut** 20LPX | 056 | 13 | 8 | | | | | | | |
| | | | | 066 | 16 | 7 | | 160RNBK041 | | *160GLGK041* | | 160PXBK041 | |
| | | | | 072 | 18 | 7 | | 180RNBK041 | | *180GLGK041* 180VXLGK041 | | 180PXBK041 | |
| | | | | 078 | 20 | 7 | | | | *200GLGK041* | | 200PXBK041 | |
| | Intenz® ** | | | | | | | | | | | | |
| .325 | .050 | **ControlCut** 20BPX | **PowerCut** 20LPX | 066 | 16 | 7 | | | | | | *160PXBT041* | |
| | | | | 072 | 18 | 7 | | | | | | *180PXBT041* | |
| | | | | 078 | 20 | 7 | | | | | | 200PXBT041 | |
| | Narrow Kerf | | | | | | | | | | | | |
| | .050 | *95VPX* | **SpeedCut** 95TXL | 056 | 13 | 7 | | | | | | 130MLBK041 | |
| | | | | 064 | 15 | 7 | | | | | | 150MLBK041 | |
| | | | | 066 | 16 | 7 | | | 160TXLGK041 | | | 160MLBK041 | |
| | | | | 072 | 18 | 7 | | | 180TXLGK041 | | | 180MLBK041 | |
| **ECV 5601** | | | | | | | | | | | | | |
| | .050 | **ControlCut** 20BPX | **PowerCut** 20LPX | 066 | 16 | 7 | *160ATMZ095* | 160RNBK095 | | *160SLGK095* 160VXLGK095 | | *160PXBK095* | |
| | | | | 072 | 18 | 7 | *180ATMZ095* | | | | | 180PXBK095 | |
| | | | | 072 | 18 | 8 | | | | *180SLGK095* 180VXLGK095 | | | |
| .325 | | | | 078 | 20 | 7 | 200ATMZ095 | 200RNBK095 | | *200SLGK095* 200VXLGK095 | | 200PXBK095 | |
| | Narrow Kerf | | | | | | | | | | | | |
| | .050 | *95VPX* | **SpeedCut** 95TXL | 066 | 16 | 7 | | | *160MPBK095* 160TXLBK095 | | | 160MLBK095 | |
| | | | | 072 | 18 | 7 | | | 180TXLBK095 | | | 180MLBK095 | |
| | | | | 078 | 20 | 7 | | | | | | | |

See page FOR 142 for saw chain sharpening tools

* See page FOR 4 for important information on Guard Mate bar-nose tip guards

** See page FOR 4 for important information on Intenz guide bars.

† ANSI B175.1-2012 and CSA Standard Z62.3 regarding reduced kickback does not apply to pole saws or pruners

For the most current fit-up information visit **OregonProducts.com**

# Guide Bar & Saw Chain Applications



**Saw Chain** | **Guide Bars**

| Pitch | Gauge | Chain Type | Drive Links | Bar Length | Drive Teeth | DuraCut™ AT — Armor Tip | PowerCut™ RN RW GN PM — PowerMatch® | SpeedCut™ TXL — Pro-Lite® MG MP | VersaCut™ VXL — Pro-Lite® SLG SLH GL GP SP | ControlCut™ PXL — Pro-Lite® SLB | AdvanceCut™ SF SX PX GD MLB — Pro-Am® | Single Rivet SD DG MLE — DoubleGuard® |
|---|---|---|---|---|---|---|---|---|---|---|---|---|
| **Tanaka** ▲ | | | | | | | | | | | | |
| **ECS-650, ECS-655** | | | | | | | | | | | | |
| 3/8 | .050 | **AdvanceCut** 72V / **PowerCut** 72EXL, LGX, LPX / **VersaCut** 72DPX | 060 | 16 | 7 | *160ATMD176* | 160RNDD176 | | 160VXLHD176 *160GLHD176* | | 160PXDD176 | |
| | | | 064 | 18 | 7 | | | | 180VXLHD176 | | | |
| | | | 066 | 18 | 7 | | 180RNDD176 | | | | 180PXDD176 | |
| | | | 070 | 20 | 7 | 200ATMD176 | 200RNDD176 | | 200VXLHD176 *200GLHD176* | | 200PXDD176 | |
| | | | 081 | 24 | 7 | | 240RNDD176 | | | | | |
| | | | 092 | 28 | 7 | | 280RNDD176 | | | | | |
| | | | 105 | 32 | 7 | | | | | | | |
| **Toro** ▲ | | | | | | | | | | | | |
| **51100, 51140** | | | | | | | | | | | | |
| 3/8 low profile | .050 | **ControlCut** 91PXL **AdvanceCut** 91PX / **VersaCut** 91VXL | 040 | 10 | 6 | | | | | | | |
| | | | 045 | 12 | 6 | | | | *120SPEA041* | | 120SXEA041 | 120SDEA041 |
| | | | 052 | 14 | 6 | | | | | | 140SXEA041 | 140SDEA041 |
| | | | 056 | 16 | 6 | | | | | | 160SXEA041 | 160SDEA041 |
| | Intenz® ** | | | | | | | | | | | |
| | .050 | **ControlCut** 91PXL **AdvanceCut** 91PX / **VersaCut** 91VXL | 045 | 12 | 6 | | | | | | | |
| | | | 052 | 14 | 6 | | | | *140SPET041* | | | 140SDET041 |
| | | | 056 | 16 | 6 | | | | *160SPET041* | | | 160SDET041 |
| **ProLine Pruner†** | | | | | | | | | | | | |
| 3/8 low profile | .050 | **ControlCut** 91PXL **AdvanceCut** 91PX / **VersaCut** 91VXL | 040 | 10 | 6 | | | | | | | 100SDEA218 |
| **Troy-Bilt** ▲ | | | | | | | | | | | | |
| **TB4016, TB4216, TB4218** | | | | | | | | | | | | |
| 3/8 low profile | .050 | **ControlCut** 91PXL **AdvanceCut** 91PX / **VersaCut** 91VXL | 054 | 16 | 6 | | | | | | | *160SDET095* |
| | | | 060 | 18 | 6 | | | | | | | 180SDEA095 |
| **TBCS57** | | | | | | | | | | | | |
| 3/8 low profile | .050 | **ControlCut** 91PXL **AdvanceCut** 91PX / **VersaCut** 91VXL | 040 | 10 | 6 | | | | | | | 100SDEA041 |

▲ See our guides for chainsaws with a **green triangle** on pages FOR 2–3

▲ See our guides for chainsaws with a **yellow triangle** on pages FOR 2–3

Saw chain complies with low kickback performance requirements (FOR 2–3)

Saw chain does not comply with low kickback performance requirements (FOR 2–3)

For information on our PowerSharp Kits see pages FOR 136–137

For Bar & Chain Combos see pages FOR 100–101

Part numbers printed in *red italics* have been obsoleted. Contact your authorized Oregon distributor for availability.

# Guide Bar & Saw Chain Applications



| Saw Chain | | | | Guide Bars | | | | | | | | | |
|---|---|---|---|---|---|---|---|---|---|---|---|---|---|
| | | | | | | DuraCut™ AT | PowerCut™ RN RW GN PM | SpeedCut™ TXL | VersaCut™ VXL | ControlCut™ PXL | AdvanceCut™ SF SX PX GD MLB | Single Rivet SD DG MLE |
| Pitch | Gauge | Chain Type | Drive Links | Bar Length | Drive Teeth | Armor Tip | PowerMatch® | Pro-Lite® MG MP | Pro-Lite® SLG SLH GL GP SP | Pro-Lite® SLB | Pro-Am® | DoubleGuard® |

## Troy-Bilt

**TB4018**

| Pitch | Gauge | Chain Type | Chain Type | Drive Links | Bar Length | Drive Teeth | Armor Tip | PowerMatch® | Pro-Lite® MG MP | Pro-Lite® SLG SLH GL GP SP | Pro-Lite® SLB | Pro-Am® | DoubleGuard® |
|---|---|---|---|---|---|---|---|---|---|---|---|---|---|
| 3/8 low profile | .050 | **ControlCut** 91PXL **AdvanceCut** 91PX | **VersaCut** 91VXL | 052 | 14 | 6 | | | | | | 140SXEA041 | 140SDEA041 |
| | | | | 056 | 16 | 6 | | | | | | 160SXEA041 | 160SDEA041 |
| | | | | 062 | 18 | 6 | | | | | | | 180SDEA041 |

**TB3516, TB4516**

| | | | | | | | | | | | | | |
|---|---|---|---|---|---|---|---|---|---|---|---|---|---|
| 3/8 low profile | .050 | **ControlCut** 91PXL **AdvanceCut** 91PX | **VersaCut** 91VXL | 055 | 16 | 6 | | | | | | | 160SDEA318 |

**TB4620, TB4920, TB5018, TB5020**

Narrow Kerf

| | | | | | | | | | | | | | |
|---|---|---|---|---|---|---|---|---|---|---|---|---|---|
| .325 | .050 | *95VPX* | **SpeedCut** 95TXL | 072 | 18 | 7 | | | 180TXLBK095 | | | 180MLBK095 | |
| | | | | 078 | 20 | 7 | | | | | | | |

**TB5518**

| | | | | | | | | | | | | | |
|---|---|---|---|---|---|---|---|---|---|---|---|---|---|
| .325 | .050 | **ControlCut** 20BPX | **PowerCut** 20LPX | 066 | 16 | 7 | *160ATMZ095* | 160RNBK095 | | *160SLGK095* 160VXLGK095 | | *160PXBK095* | |
| | | | | 072 | 18 | 7 | *180ATMZ095* | | | *180SLBK095* | | 180PXBK095 | |
| | | | | 072 | 18 | 8 | | | | *180SLGK095* 180VXLGK095 | | | |
| | | | | 078 | 20 | 8 | 200ATMK095 | 200RNBK095 | | *200SLGK095* 200VXLGK095 | | 200PXBK095 | |

## Wen / Wagner

**1100, 1200, 1400, 2000, 2400, 2600, 2700, 5008, 5010, 5014, 5016, Bumble Bee, Hornet, Wasp**

| | | | | | | | | | | | | | |
|---|---|---|---|---|---|---|---|---|---|---|---|---|---|
| 3/8 low profile | .050 | **ControlCut** 91PXL **AdvanceCut** 91PX | **VersaCut** 91VXL | 035 | 8 | 6 | | | | | | | |
| | | | | 041 | 10 | 6 | | | | | | | |
| | | | | 048 | 12 | 6 | | | | | | | |
| | | | | 053 | 14 | 6 | | | | | | | |
| | | | | 058 | 16 | 6 | | | | | | | |

**6014, 6016, Lumberjack**

| | | | | | | | | | | | | | |
|---|---|---|---|---|---|---|---|---|---|---|---|---|---|
| 3/8 low profile | .050 | **ControlCut** 91PXL **AdvanceCut** 91PX | **VersaCut** 91VXL | 049 | 14 | 6 | | | | | | | |
| | | | | 055 | 16 | 6 | | | | | | | |

**3814, 4014**

| | | | | | | | | | | | | | |
|---|---|---|---|---|---|---|---|---|---|---|---|---|---|
| 3/8 low profile | .050 | **ControlCut** 91PXL **AdvanceCut** 91PX | **VersaCut** 91VXL | 052 | 14 | 7 | | | | | | 140SXEA041 | 140SDEA041 |
| | | | | 056 | 16 | 7 | | | | | | 160SXEA041 | 160SDEA041 |

**3816, 3818, 4016**

| | | | | | | | | | | | | | |
|---|---|---|---|---|---|---|---|---|---|---|---|---|---|
| 3/8 low profile | .050 | **ControlCut** 91PXL **AdvanceCut** 91PX | **VersaCut** 91VXL | 056 | 16 | 7 | | | | *160SPEA095* | | 160SXEA095 | 160SDEA095 |
| | | | | 060 | 18 | 7 | | | | | | | 180SDEA095 |

See page FOR 142 for saw chain sharpening tools

* See page FOR 4 for important information on Guard Mate bar-nose tip guards

** See page FOR 4 for important information on Intenz guide bars.

† ANSI B175.1-2012 and CSA Standard Z62.3 regarding reduced kickback does not apply to pole saws or pruners

For the most current fit-up information visit **OregonProducts.com**

# Guide Bar & Saw Chain Applications



| Saw Chain | | | | | Guide Bars | | | | | | | | |
|---|---|---|---|---|---|---|---|---|---|---|---|---|---|
| | | | | | | DuraCut™ AT | PowerCut™ RN RW GN PM | SpeedCut™ TXL | VersaCut™ VXL | ControlCut™ PXL | AdvanceCut™ SF SX PX GD MLB | Single Rivet SD DG MLE |
| Pitch | Gauge | Chain Type | Drive Links | Bar Length | Drive Teeth | Armor Tip | PowerMatch® | Pro-Lite® MG MP | Pro-Lite® SLG SLH GL GP SP | Pro-Lite® SLB | Pro-Am® | DoubleGuard® |
| **Worx** | | | | | | | | | | | | |
| **WG300, WG303, WG303.1, WG304, WG304.1** | | | | | | | | | | | | |
| 3/8 low profile | .050 | **ControlCut** 91PXL **AdvanceCut** 91PX | **VersaCut** 91VXL | 053 | 14 | 7 | | | | | 140SXEA041 | 140SDEA041 |
| | | | | 057 | 16 | 7 | | | | | 160SXEA041 | 160SDEA041 |
| | | | | 063 | 18 | 7 | | | | | | 180SDEA041 |
| **WG309** | | | | | | | | | | | | |
| 3/8 low profile | .050 | **ControlCut** 91PXL **AdvanceCut** 91PX | **VersaCut** 91VXL | 040 | 10 | 6 | | | | | | 100SDEA041 |
| **WG310** | | | | | | | | | | | | |
| 3/8 low profile | .043 | **AdvanceCut** 90PX | | 034 | 8 | 6 | | | | | | |
| **WG305, WG305.1** | | | | | | | | | | | | |
| 3/8 low profile | .050 | **ControlCut** 91PXL **AdvanceCut** 91PX | **VersaCut** 91VXL | 052 | 14 | 6 | | | | | 140SXEA041 | 140SDEA041 |
| **WG307, WG308, Jawsaw, WG320, WG321** | | | | | | | | | | | | |
| 1/4 | .050 | | **ControlCut** 25AP | 042 | 6 | 5 | | | | | | |
| **WG380, WG380.9** | | | | | | | | | | | | |
| 3/8 low profile | .043 | **AdvanceCut** 90PX | | 045 | 12 | | | | | | | 124MLEA041 |

See our guides for chainsaws with a **green triangle** on pages FOR 2–3

See our guides for chainsaws with a **yellow triangle** on pages FOR 2–3

Saw chain complies with low kickback performance requirements (FOR 2–3)

Saw chain does not comply with low kickback performance requirements (FOR 2–3)

For information on our PowerSharp Kits see pages FOR 136–137

For Bar & Chain Combos see pages FOR 100–101

Part numbers printed in *red italics* have been obsoleted. Contact your authorized Oregon distributor for availability.

# Ordering Oregon Saw Chain



## Chain Packaging & Saw Chain Ordering

**Note**: Dealers must provide customers with the correct-color label, or loop box (green or yellow) with each sale of each chain part number. Sufficient ANSI labels or printed loop boxes are provided in the original factory reel shippers containing Oregon chains. Below are additional loop boxes that may be ordered. See FOR 2–3 for full details on correct labeling of chain sales.

| Package Type | OREGON | Description |
|---|---|---|
| Loop Packaging | 591063 | Loop Carton 25-pack (Yellow ANSI), Black |
| | 591062 | Loop Carton 25-pack (Green ANSI), Black |
| | 591061 | Loop Carton 25-pack (Green ANSI), Grey |

## Ordering Oregon Chain

| Packaging Type | Chain Type | + | Package Designation | = | OREGON |
|---|---|---|---|---|---|
| Bulk Chain, 100-Foot Reel | 72LPX | + | 100U = 100-Foot Reel | = | 72LPX100U |
| Bulk Chain, 25-Foot Reel | 91PX | + | 025U = 25-Foot Reel | = | 91PX025U |
| Loop of Chain, in a Loop Box | 21LPX | + | 066G = 66 Drive Link Loop in a Loop Box | = | 21LPX066G |

## Components Included in Reel Shippers

| Pitch | Loop Cartons | Parts Kit | | Loop Cartons | Parts Kit |
|---|---|---|---|---|---|
| | **25 ft. Reels** | | | **100 ft. Reels** | |
| 1/4" | 6 | 10 TS / 10 PSTS | | 30 | 40 TS / 40 PSTS |
| 3/8" Low Profile™ | 6 | 10 TS / 10 PSTS | | 30 | 40 TS / 40 PSTS |
| .325" | 6 | 9 TS / 9 PSTS | | 30 | 36 TS / 36 PSTS |
| 3/8" | 6 | 8 TS / 8 PSTS | | 24 | 32 TS / 32 PSTS |
| .404" | N/A | N/A | | 14 | 32 TS / 32 PSTS |

## Oregon Part Number Conversion Table

| | | | | Examples | | |
|---|---|---|---|---|---|---|
| Pitch | Gauge | Retail Chain Code | Chain Type | Drive Link Count | Retail** Part Numbers | Dealer† Part Numbers |
| 1/4" | .050" | A | 25AP | 42 | A42 | 25AP042G |
| 3/8" Low Profile™ | .043" | R | 90PX | 40 | R40 | 90PX040G |
| 3/8" Low Profile | .050" | S | 91PX | 52 | S52 | 91PX052G |
| 3/8" Low Profile | .050" | T | 91VXL | 57 | T57 | 91VXL057G |
| .325" | .050" | M | 95TXL | 66 | M66 | 95TXL066G |
| .325" | .050" | *G* | *95VPX* | 66 | *G66* | *95VPX066G* |
| .325" | .050" | H | 20BPX | 66 | H66 | 20BPX066G |
| .325" | .050" | Q | 20LPX | 72 | Q72 | 20LPX072G |
| .325" | .058" | J | 21BPX | 66 | J66 | 21BPX066G |
| .325" | .058" | U | 21LPX | 72 | U72 | 21LPX072G |
| .325" | .063" | L | 22BPX | 67 | L67 | 22BPX067G |
| .325" | .063" | V | 22LPX | 67 | V67 | 22LPX067G |
| 3/8 | .050" | D | 72V | 60 | D60 | 72V060G |
| 3/8" | .050" | B | 72EXL | 72 | B72 | 72EXL072G |
| 3/8" | .050" | E | 72LPX | 72 | E72 | 72LPX072G |
| 3/8" | .058" | P | 73V | 72 | P72 | 73V072G |
| 3/8" | .058" | K | 73EXL | 72 | K72 | 73EXL072G |

** As sold in hardware stores and home centers, † as sold in servicing dealerships

Chain part numbers printed in *red italics* have been obsoleted. Contact your authorized Oregon distributor for availability.

## Overview of Packaging Changes

**Product Families and Package Colors**
We have redesigned our packaging to help you identify the products that are right for you. We created three tiers of user-friendly product families, differentiated by color, to simplify your selection process.

| PROFESSIONAL USERS | OCCASIONAL USERS | BASIC PRODUCTS |
|---|---|---|
| PowerCut™<br>SpeedCut™<br>VersaCut™<br>ControlCut™<br>DuraCut™<br>RipCut™ | AdvanceCut™<br>PowerSharp® | Single rivet guide bars<br>Accessories |

**Professional Users** will see premium features designed for their jobs in black packaging.

**Occasional Users** can find products with features geared specifically for them in gray packaging.

**Basic Products** are identified by white packaging.

**Package Materials and Durability**
You'll notice a real improvement in our packaging; we've used higher quality materials and superior construction for better durability.

**Clear Communication and User-Friendly Layout**
You can identify and choose the right product through the following:

- Product family
- Part number
- OEM chainsaw fit up
- Product information
- Window for product visibility
- Bar motor mount exposed for easy identification
- Areas to write product information

**Guide Bar Packaging**

**Saw Chain Loop Packaging**

# Guide Bar & Saw Chain Combos



## Oregon® Guide Bar & Chain Combos by Motor Mount Number

Our updated line-up of Oregon bar and chain combos puts many of our most popular products together in attractive packaging for ease of selection and increased sales. The new visual graphic style we are introducing on the display packaged loop line-up is carried over into our refreshed guide bar & chain combo offering. The complete Oregon merchandising program lets you move guide bars and chains out of your back room and into your showroom.

| | | Gude Bar | | | Saw Chain | | | | |
|---|---|---|---|---|---|---|---|---|---|
| Bar Mount | Combo Part No. | Length | Part № | Family | Type | Pitch | Gauge | Drive Links | Family |
| **Craftsman, Echo, Poulan, Poulan Pro, Shindaiwa, Tanaka** | | | | | | | | | |
| A041 | 105698 | 12" | 120 DGE A041 | Single Rivet | 91PX | 3/8" LP | .050" | 45 | AdvanceCut |
| | 105699 | 14" | 140 DGE A041 | Single Rivet | 91PX | 3/8" LP | .050" | 52 | AdvanceCut |
| | 105700 | 16" | 160 DGE A041 | Single Rivet | 91PX | 3/8" LP | .050" | 56 | AdvanceCut |
| | 540394 | 18" | 180 DGE A041 | Single Rivet | 91PX | 3/8" LP | .050" | 62 | AdvanceCut |
| K041 | 557505 | 16" | 160 GDB K041 | AdvanceCut™ | 20BPX | .325" | .050" | 66 | ControlCut™ |
| | 557504 | 18" | 180 GDB K041 | AdvanceCut | 20BPX | .325" | .050" | 72 | ControlCut |
| | 557503 | 20" | 200 GDB K041 | AdvanceCut | 20BPX | .325" | .050" | 78 | ControlCut |
| **Stihl** | | | | | | | | | |
| A074 | 540389 | 12" | 124 MLE A074 | Single Rivet | 90PX | 3/8" LP | .043" | 44 | AdvanceCut |
| | 540390 | 14" | 144 MLE A074 | Single Rivet | 90PX | 3/8" LP | .043" | 50 | AdvanceCut |
| | 557501 | 14" | 140 SDE A074 | Single Rivet | 91PX | 3/8" LP | .050" | 50 | AdvanceCut |
| | 557502 | 16" | 160 SDE A074 | Single Rivet | 91PX | 3/8" LP | .050" | 55 | AdvanceCut |
| | 578779 | 16" | 163 PXLB A074 | ControlCut | 22BPX | .325" | .063" | 62 | ControlCut |
| | 578780 | 18" | 183 PXLB A074 | ControlCut | 22BPX | .325" | .063" | 68 | ControlCut |
| D025 | 579775 | 16" | 163 VXLG D025 | VersaCut™ | 22BPX | .325" | .063" | 67 | ControlCut |
| | 579776 | 18" | 183 VXLG D025 | VersaCut | 22BPX | .325" | .063" | 74 | ControlCut |
| | 579777 | 20" | 203 VXLG D025 | VersaCut | 22BPX | .325" | .063" | 81 | ControlCut |
| **Dolmar, Efco, Husqvarna, Jonsered, Makita, Redmax** | | | | | | | | | |
| K095 | 579778 | 16" | 168 VXLG K095 | VersaCut | 21BPX | .325" | .058" | 66 | ControlCut |
| | 579809 | 18" | 188 VXLG K095 | VersaCut | 21BPX | .325" | .058" | 72 | ControlCut |
| | 579810 | 20" | 208 VXLG K095 | VersaCut | 21BPX | .325" | .058" | 78 | ControlCut |
| | 578782 | 16" | 168 PXLB K095 | ControlCut | 21BPX | .325" | .058" | 66 | ControlCut |
| | 578783 | 18" | 188 PXLB K095 | ControlCut | 21BPX | .325" | .058" | 72 | ControlCut |

| | | | | | | | | | |
|---|---|---|---|---|---|---|---|---|---|
| **Dolmar, Husqvarna, Jonsered, Makita, Poulan Pro, Shindaiwa** | | | | | | | | | |
| K095 | 578482 | 16" | 160 TXLB K095 | SpeedCut™ | 95TXL | .325" | .050" | 66 | SpeedCut |
| | 578764 | 18" | 180 TXLB K095 | SpeedCut | 95TXL | .325" | .050" | 72 | SpeedCut |
| D009 | 580120 | 20" | 200 VXLH D009 | VersaCut | 72EXL | 3/8" | .050" | 72 | PowerCut™ |
| | 580124 | 16" | 168 VXLH D009 | VersaCut | 73EXL | 3/8" | .058" | 60 | PowerCut |
| | 580126 | 18" | 188 VXLH D009 | VersaCut | 73EXL | 3/8" | .058" | 68 | PowerCut |
| | 580121 | 20" | 208 VXLH D009 | VersaCut | 73EXL | 3/8" | .058" | 72 | PowerCut |
| **Stihl** | | | | | | | | | |
| A074 | 578766 | 16" | 160 TXLB A074 | SpeedCut | 95TXL | .325" | .050" | 62 | SpeedCut |
| | 578767 | 18" | 180 TXLB A074 | SpeedCut | 95TXL | .325" | .050" | 68 | SpeedCut |
| D025 | 580123 | 20" | 200 VXLH D025 | VersaCut | 72EXL | 3/8" | .050" | 72 | PowerCut |
| | 580125 | 16" | 163 VXLH D025 | VersaCut | 75EXL | 3/8" | .063" | 60 | PowerCut |
| | 580741 | 18" | 183 VXLH D025 | VersaCut | 75EXL | 3/8" | .063" | 66 | PowerCut |
| | 580122 | 20" | 203 VXLH D025 | VersaCut | 75EXL | 3/8" | .063" | 72 | PowerCut |

## Oregon® Guide Bar & Chain Combos by Motor Mount Number – Discontinued

**Available while supplies last**
Please check with your distributor for availablily.

### Stihl

| Bar Mount | Combo Part No. | Gude Bar Length | Gude Bar Part № | Gude Bar Family | Saw Chain Type | Saw Chain Pitch | Saw Chain Gauge | Saw Chain Drive Links | Saw Chain Family |
|---|---|---|---|---|---|---|---|---|---|
| A074 | *540391* | 16" | 163 SLB A074 | Pro-Lite® | 22BPX | .325" | .063" | 62 | |
| | *540392* | 18" | 183 SLB A074 | Pro-Lite | 22BPX | .325" | .063" | 68 | |
| D025 | *105705* | 16" | 163 SLG D025 | Pro-Lite | 22BPX | .325" | .063" | 67 | |
| | *105706* | 18" | 183 SLG D025 | Pro-Lite | 22BPX | .325" | .063" | 74 | |
| | *540393* | 20" | 203 SLG D025 | Pro-Lite | 22BPX | .325" | .063" | 81 | |

### Dolmar, Efco, Husqvarna, Jonsered, Makita, Redmax

| Bar Mount | Combo Part No. | Gude Bar Length | Gude Bar Part № | Gude Bar Family | Saw Chain Type | Saw Chain Pitch | Saw Chain Gauge | Saw Chain Drive Links | Saw Chain Family |
|---|---|---|---|---|---|---|---|---|---|
| K095 | *105712* | 16" | 168 SLG K095 | Pro-Lite | 21BPX | .325" | .058" | 66 | |
| | *105713* | 18" | 188 SLG K095 | Pro-Lite | 21BPX | .325" | .058" | 72 | |
| | *105714* | 20" | 208 SLG K095 | Pro-Lite | 21BPX | .325" | .058" | 78 | |
| | *108579* | 16" | 160 MLB K095 | Pro-Am® | *95VPX* | .325" | .050" | 66 | |
| | *108580* | 18" | 180 MLB K095 | Pro-Am | *95VPX* | .325" | .050" | 72 | |

### Dolmar, Husqvarna, Jonsered, Makita, Poulan Pro, Shindaiwa

| Bar Mount | Combo Part No. | Gude Bar Length | Gude Bar Part № | Gude Bar Family | Saw Chain Type | Saw Chain Pitch | Saw Chain Gauge | Saw Chain Drive Links | Saw Chain Family |
|---|---|---|---|---|---|---|---|---|---|
| D009 | *109121* | 20" | 200 SLH D009 | Pro-Lite | 72LGX | 3/8" | .050" | 72 | |
| | *109116* | 16" | 168 SLH D009 | Pro-Lite | 73LGX | 3/8" | .058" | 60 | |
| | *109117* | 18" | 188 SLH D009 | Pro-Lite | 73LGX | 3/8" | .058" | 68 | |
| | *109118* | 20" | 208 SLH D009 | Pro-Lite | 73LGX | 3/8" | .058" | 72 | |

### Stihl

| Bar Mount | Combo Part No. | Gude Bar Length | Gude Bar Part № | Gude Bar Family | Saw Chain Type | Saw Chain Pitch | Saw Chain Gauge | Saw Chain Drive Links | Saw Chain Family |
|---|---|---|---|---|---|---|---|---|---|
| D025 | *106032* | 20" | 200 SLH D025 | Pro-Lite | 72LGX | 3/8" | .050" | 72 | |
| | *110782* | 16" | 163 SLH D025 | Pro-Lite | 73LGX | 3/8" | .058" | 60 | |
| | *110783* | 18" | 183 SLH D025 | Pro-Lite | 73LGX | 3/8" | .058" | 66 | |
| | *110784* | 20" | 203 SLH D025 | Pro-Lite | 73LGX | 3/8" | .058" | 72 | |

Part numbers printed in *red italics* have been obsoleted. Contact your authorized Oregon distributor for availability.

# SAW CHAIN

PowerCut™ 70-Series EXL . . . . . FOR 104–105
SpeedCut™ System . . . . . FOR 106–107
Features and Terminology . . . . . FOR 108–110
Product Families . . . . . FOR 111–113
PowerCut™ Saw Chains. . . . . FOR 114–118
SpeedCut™ Saw Chains . . . . . FOR 120–121
VersaCut™ Saw Chains . . . . . FOR 122–123
ControlCut™ Saw Chains . . . . . FOR 124–125
DuraCut™ Saw Chain . . . . . FOR 126–128
RipCut™ Saw Chains . . . . . FOR 130–131
Sculptor™ Saw Chains . . . . . FOR 132
AdvanceCut™ Saw Chains . . . . . FOR 134–135
PowerSharp® Saw Chains . . . . . FOR 136–137
Cross-Reference Chart . . . . . FOR 138–139
Sharpening and Grinding Angles . . FOR 140–141
Replacement Parts . . . . . FOR 142–143
Wear and Troubleshooting . . . . . FOR 144–146
Drive Link Counts . . . . . .FOR 147

# PowerCut™ 70-Series EXL

## An Evolution to the Popular LGX 3/8" Professional Saw Chain

## REPUTATIONS ARE BUILT WITH EVERY CUT

# Keep Your Edge

With every cut, your reputation is on the line. That's why we've spent generations engineering the sharpest, fastest professional cutting systems in the world. Day in and day out, the PowerCut 70-Series EXL full chisel cutters help you power through timber with speed, efficiency, and precision.

Designed to maximize every cut, our proprietary cutter technology gives users a sharper, more durable cutting edge that provides increased cutting performance with less effort. We're constantly raising the bar, pushing ourselves to exceed the demands of the professionals who rely on us to make the job feel less like work.

## Advantages

- Multi-axis grind technology for superior performance, sharpness, and consistency
- Reshaped cutter powers through timber with speed, efficiency, and precision
- Designed to reduce the force applied by the operator
- Engineered to utilize the power of today's professional saws
- LubriTec™ keeps your saw chain and guide bar oiled for less friction and longer life
- Gold Loop Start Indicator makes sharpening easier with start and stop identification

÷2

3/8"

.050"
.058"
.063"

LubriTec™ OILING SYSTEM

| No. | Gauge | Standard Sequence |
|---|---|---|
| 72EXL | .050" | |
| 73EXL | .058" | |
| 75EXL | .063" | |

| Skip Sequence | | |
|---|---|---|
| 72EXJ | .050" | |
| 73EXJ | .058" | |
| 75EXJ | .063" | |

**Saw Size**

50–100 cc

**Bar Lengths**

16–36" (40–90 cm)

# SpeedCut™

## 95-Series .325” Cutting System

## A BETTER SAW STARTS HERE

Get your cutting done easier and faster. Our SpeedCut™ System works as hard as you do. Made for mid-size saws (≤ 55cc). The narrow kerf guide bar and saw chain need less power for faster cuts in most conditions.

# SpeedCut ™ 95-Series .325 Cutting System

## The Narrow Kerf Advantage

A narrow kerf means faster cuts because less wood is displaced.

Top performance comes from pairing the narrow kerf 95TXL saw chain with a specially built narrow kerf guide bar. Light-weight and efficient, the SpeedCut System cuts faster and better on mid-size chainsaws.

Always use bars designed for narrow kerf saw chain. Look for this icon .

## 95TXL Saw Chain

**FASTER***
Get a faster, easier cut with a re-shaped cutting surface and narrow kerf design

**SHARPER***
Sharper, more durable cutting edge from a new precision grind and optimized cutting angle

**EASIER***
An easier to sharpen chain, with the cutting surface matched to the file. More indicators help you spot the recommended filing angles

- LubriTec™ keeps guide bar rails and rivet joints oiled, for less wear and longer life
- Replaces 95VPX

## Guide Bars

**LIGHTER****
Up to 20% lighter, for more control and less fatigue with a light-weight aluminum core

**STRONGER****
Stiffer and stronger with aerospace bonding technology

**LONGER LASTING****
More durable on the job, from a redesigned nose with new parts and materials. Harder bar rails designed to last longer.

- Better chain retention and less wear via precision rail groove design
- LubriTec™ keeps the chain drive link and chain rivet joints oiled, for less wear and longer life

.325"

.050"

13"
15"
16"
18"
20"

LubriTec™
OILING SYSTEM

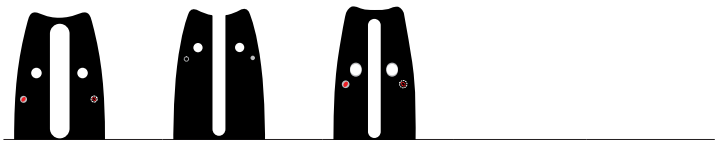

**D025**
Stihl®

**A074**
Stihl®

**K095**
Dolmar®
Husqvarna®
Partner®
Poulan®
Mcculloch®
Makita®
Homelite®
Jonsered®

*When compared to Oregon 95VPX saw chain. ** When compared to equivalent Oregon Pro-Lite guide bars.

Oregon , LubriTec , SpeedCut , Witness Mark and the Narrow Kerf icon are trademarks of Blount, Inc. All other marks are property of their respective owners.

## Oregon Features – Lubrication

LubriTec™
OILING SYSTEM

You want tools to work smarter and last longer. We designed LubriTec to deliver the best possible lubrication for your saw chain. Keeping lubrication where it's needed most means a longer lasting saw chain and guide bar and less down time. Here's how it works:

### LubriTec for the Chain*

- Lubricant is held inside LubriTec reservoirs
- Oil flows freely into and around the saw chain parts and the guide bar. Oil is held in the high-friction zone where the saw chain and guide bar groove walls make contact.
- The presence of lubricant lowers friction during the start-up period before the saw's oiling system reaches its peak function
- LubriTec strengthens the saw chain tie straps and reduces their tendency to flex during operation, making a more stable and durable saw chain

### LubriTec for the Guide Bar*

- Our LubriTec guide bar dam is cleverly designed to keep lubricant where it's needed most. It looks like a small barrier and is found in the bottom of the guide bar's groove, just behind the oil hole. It both increases available oil and reduces oil hole plugging. Resulting in better overall lubrication.
- The LubriTec angled oil hole virtually eliminates guide bar oil hole plugging. The oil hole slopes up toward the top of the guide bar and forward toward the nose. It's approximately 40% smaller in diameter than a standard hole, increasing velocity as oil enters the guide bar. It also helps clear sawdust and debris away from the hole during operation.

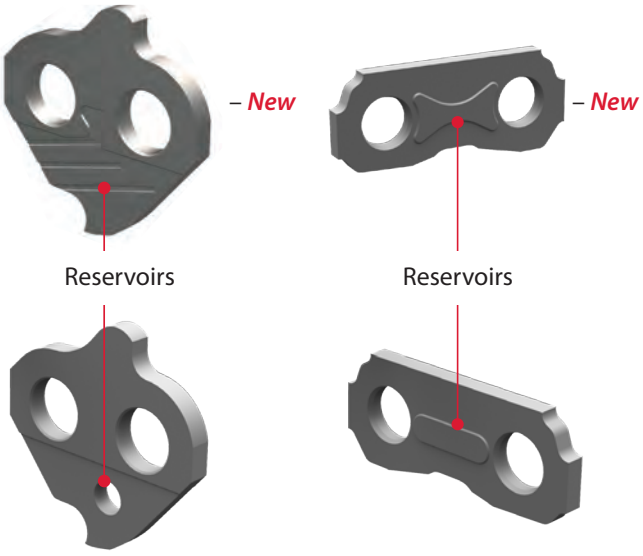


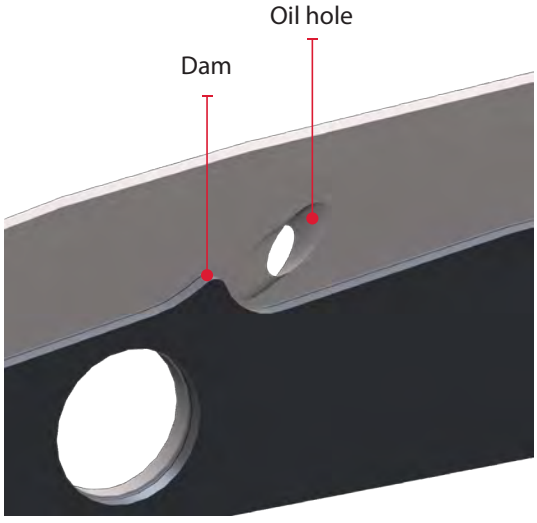


***Combination of features will vary by chain and bar products**

## Oregon Features – Saw Chain

### Low Vibration

Less vibration equals more comfort. We wanted to lessen vibration-induced white finger (VWF), so we created a small space between the saw chain and the guide bar. A lot of the energy gets dissipated by the saw chain, acting as a shock absorber. It never reaches the guide bar, the saw — or most important — the operator. Our low vibration design reduces vibrations by 25% or more.

### Filing Indicators

Your sharpening made easier and more accurate. Special filing marks show the best top-plate angle. Lines make it easier for filing the correct top-plate angle and help maintain equal cutter lengths. Filing indicators show you when cutters have reached the end of their life. Cutters should not be sharpened beyond the line.

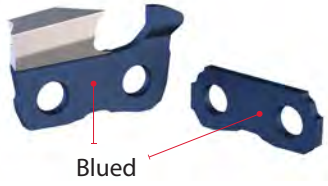


### Blued Components

Our Blued Components give you high-quality resistance to corrosion with the presence of protective oil. A precise and controlled tempering process results in a blue surface, designating our best-in-class saw chain.

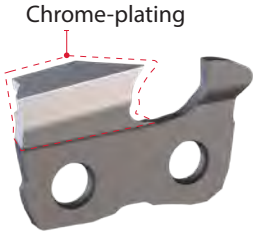


### Chrome-Plated Cutters

Your chain stays sharper, longer. Oregon electroplates a layer of industrial hard chrome to all our saw chain cutters. Chrome delivers a harder surface and better wear resistance. So you spend more time cutting and less time filing or grinding the chain.

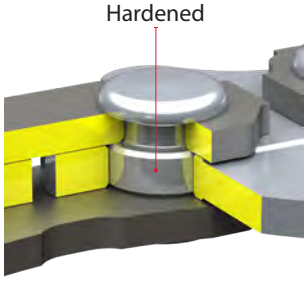


### Hardened Rivets

For a longer working saw chain, Oregon induction hardens and quenches all saw chain rivets, delivering a high-quality, load-bearing surface that resists wear and improves strength. Less wear and chain stretch means fewer chain tension adjustments.

# Saw Chain



## Saw Chain Terminology

Parts of Saw Chain

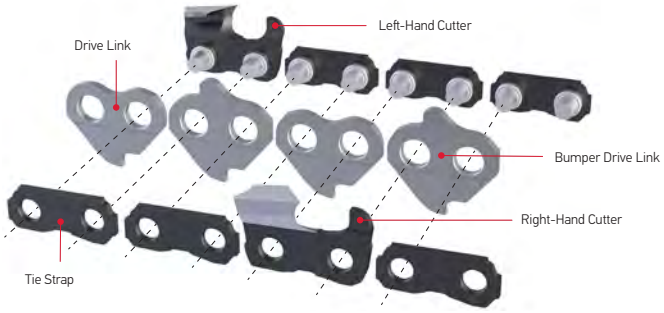


Parts of a Cutter

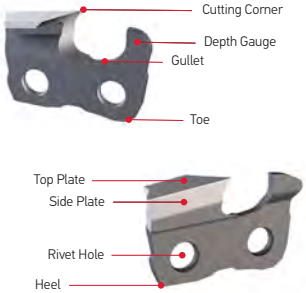


Parts of a Rivet

## Chain Cutter Sequence Terminology

Standard

Semi-skip

Skip

## Why Choose "Semi-Skip" or "Skip" Sequence Chain?

Consumer users of chainsaws will probably never need to use a semi-skip or skip sequence chain. However, professional or commercial chainsaw operators who use their saws frequently and who use longer bars may prefer a semi-skip or skip chain for these reasons:

- Fewer cutters to sharpen makes sharpening faster and easier
- Greater clearance for better chip flow – the larger the wood being cut and the longer the bar used, the more important good chip flow becomes
- The type of wood being cut and other factors will affect the choice of the chain type and chain sequence, but with the full-size 3/8" pitch and .404" pitch chains, preferred by professional and commercial operators who use longer bars, the following general guidelines will be useful

**Bar Length considerations for semi-skip and skip chain:**

| Chain Sequence | Recommended Bar Lengths |
|---|---|
| Standard | Up to 24" (60 cm) |
| Semi-Skip (Square Ground only) | 24" to 32" (60 – 80 cm) |
| Skip | 32" and longer (80 cm+) |

## Kickback Reducing Features – Icon Key

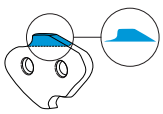
Bumper Drive Link

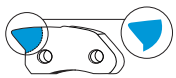
Bumper Tie Strap

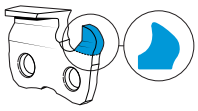
Ramped Depth Gauge

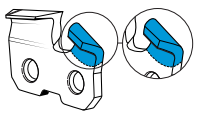
Wide-Track Depth Gauge

# Product Families

Oregon understands that the needs of woodcutters – professionals and novices – are as diverse as the terrains and environments in which they work.

We have organized our saw chains into product families with key characteristics that different users will value. These product families will help ensure that you choose the right chain based on your everyday needs — helping to make understanding the differences between our chains effortless.



To help easily identify our tiers of products, packaging is differentiated by color. Product within families meeting the needs of occasional users will be indicated by gray packaging. Product families targeted at demanding professional users will be indicated by black packaging.

## Chain for High-Performance Saws

**PowerCut™**
The ultimate saw chain for loggers and skilled forest workers who use high performance saws. Full chisel cutters power through timber with speed, efficiency, and precision.

**SpeedCut™**
Faster, cutting performance for wood-cutting professionals who use mid-size saws under 55cc. Narrow kerf system requires less power to cut through high volumes of wood quickly and easily.

**VersaCut™**
Designed for landowners and tree-cutting professionals who require a multi-purpose, high performing saw chain. Uses cutters designed for maximum durability and versatility.

**ControlCut™**
Ideal for wood cutting professionals looking for a fully featured cutting system that delivers smooth cutting and reduced kickback. Easy to maintain saw chain, with a forgiving sharpening profile.

**DuraCut™**
Made for woodcutters working in abrasive and tough environments. Advanced plating process with extra layers of chrome extends sharpness up to three times longer than conventional saw chain.

**RipCut™**
Created specifically for chain-type sawmills. Produces smooth ripping cuts with supreme efficiency to make precise boards and planks.

## Chain with Reliable Performance

**AdvanceCut™**
Perfect for homeowners cutting trees on their property and for landscape professionals who occasionally cut wood. User-friendly because of the low kickback designs.

Saw Chain Pitch | Electric → 100 CC | Saw Chain Number by Gauge

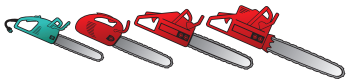

| Saw Chain Pitch | .043" | .050" | .058" | .063" |
|---|---|---|---|---|
| 1/4" | | 25 | | |
| 3/8" Low Profile™ | 90 | 91 | | |
| .325" | | 20<br>95 | 21 | 22 |
| 3/8" | | 72 | 73 | 75 |
| .404" | | | | 27<br>59<br>68 |

Chain images are to actual size.

## Chain for High-Performance Saws

## Chain with Reliable Performance

| PowerCut™ | SpeedCut™ | VersaCut™ | ControlCut™ | DuraCut™ | RipCut™ | | AdvanceCut™ | |
|---|---|---|---|---|---|---|---|---|
| Maximum speed with precision cutting for high performance saws | Faster, Sharper, and Easier to maintain; requires less power for faster cuts | Multi-purpose use, stays sharp longer and is easier to file | Smooth cutting with reduced kickback features | Maximum sharpness durability for abrasive conditions; file with standard tools | Effective cutter design for saw mill ripping cuts | **Specialty Products** | Durability and performance you can count on, with reduced kickback features | **Specialty Products** |
| | | | 25AP | | | *25A*<br>25F | | |
| | | 91VXL | 91PXL | M91VXL | | | 90PX<br>91PX | 91PS |
| 20LPX<br>21LPX<br>22LPX | 95TXL<br>*95VPX* | | 20BPX<br>21BPX<br>22BPX | M20BPX<br>M21BPX<br>M22BPX<br>*M20LPX*<br>*M21LPX*<br>*M22LPX* | | | | |
| 72EXL, EXJ<br>73EXL, EXJ<br>75EXL, EXJ<br>*72LGX, JGX*<br>*73LGX, JGX*<br>*75LGX, JGX*<br>72LPX, JPX<br>73LPX<br>75LPX<br>72CL, CK, CJ<br>73CL, CK<br>75CL, CK, CJ | | 72DPX, APX<br>73DPX<br>75DPX | | M72DPX<br>M73DPX<br>M75DPX<br>*M72LPX*<br>*M73LPX*<br>*M75LPX* | 72RD<br>73RD<br>75RD | | 72V<br>73V<br>75V | |
| 68LX, JX<br>68CL, CJ<br>59L, J | | 27X, AX | | | 27R<br>27RX | | | |

**Chain part numbers printed in *red italics* have been obsoleted. Contact your authorized Oregon distributor for availability.**

# PowerCut™

Highly-experienced loggers and skilled forest workers require precision, power, and speed to get through a hard day's work.

Oregon's PowerCut saw chain possesses all of those qualities. PowerCut uses full chisel cutters that cut quickly through timber with precise cuts. Available in two cutting styles: traditional round ground and square ground options for more efficient cutting when logging the largest timber.

If you require top performance during a long day of logging, then PowerCut is the right cutting system for you.

**• Speed • Power • Precision**

## PowerCut™

### 20, 21, 22 LPX

An ideal chain for professional woodcutters who use .325" pitch saws. Low-vibration, full chisel cutters offer top performance. Offset depth gauges prevent cutters from driving into the sidewall of the cut, offering a smoother cut.

**Features and Benefits**

- LubriTec™ keeps your saw chain and guide bar oiled, for less friction and longer life
- Blued Cutters deliver high-quality protection against corrosion
- Top-Plate Filing Indicators makes accurate sharpening easie
- Our exclusive OCS-01 Steel delivers greater durability

| No. | Gauge | Standard Sequence |
|---|---|---|
| 20LPX | .050" | |
| 21LPX | .058" | |
| 22LPX | .063" | |

**.325"**

**Saw Size**
38–62 cc

**Bar Lengths**
13–20" (32–50 cm)

| Chisel | Kickback Safety |
|---|---|
| | 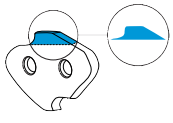 |

## PowerCut™

### 72, 73, 75 EXL
### 72, 73, 75 EXJ

With a reshaped cutter and multi-axis grind technology for superior performance, sharpness and consistency; now the top option for professional woodcutters who use 3/8" pitch saws (replaces 72, 73, 75LGX & JPX). This low-vibration, full chisel cutter chain is engineered to utilize the power of today's professional saws and reduce the force applied by the operator. Designed to maximize every cut, our proprietary cutter technology gives users a sharper, more durable cutting edge that provides increased cutting performance with less effort.

**Features and Benefits**

- LubriTec™ keeps your saw chain and guide bar oiled, for less friction and longer life
- Blued Cutters deliver high-quality protection against corrosion
- Expanded Top-Plate Filing Indicators and depth gauge Filing Indicators area make accurate sharpening easier
- Gold Loop Start Indicator makes sharpening easier with start and stop identification
- Our exclusive OCS-01 Steel delivers greater durability

**3/8"**

**Saw Size**
50–100 cc

**Bar Lengths**
16–36" (40–90 cm)

**Chisel**

**Kickback Safety**

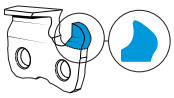

| No. | Gauge | Standard Sequence |
|---|---|---|
| 72EXL<br>73EXL<br>75EXL | .050"<br>.058"<br>.063" | |
| | | **Skip Sequence** |
| 72EXJ<br>73EXJ<br>75EXJ | .050"<br>.058"<br>.063" | |

### *72, 73, 75 LGX*
### *72, 73, 75 JGX*

An ideal chain for professional woodcutters who use 3/8" pitch saws. Low-vibration, full chisel cutters offer top performance. Offset depth gauges prevent cutters from driving into the sidewall of the cut, offering a smoother cut.

**Features and Benefits**

- LubriTec™ keeps your saw chain and guide bar oiled, for less friction and longer life
- Blued Cutters deliver high-quality protection against corrosion
- Top-Plate Filing Indicators makes accurate sharpening easier
- Our exclusive OCS-01 Steel delivers greater durability

**3/8"**

**Saw Size**
50–100 cc

**Bar Lengths**
16–36" (40–90 cm)

**Chisel**

**Kickback Safety**

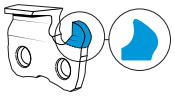

| No. | Gauge | Standard Sequence |
|---|---|---|
| *72LGX*<br>*73LGX*<br>*75LGX* | .050"<br>.058"<br>.063" | |
| | | **Skip Sequence** |
| *72JGX*<br>*73JGX*<br>*75JGX* | .050"<br>.058"<br>.063" | |

Chain part numbers printed in *red italics* have been obsoleted. Contact your authorized Oregon distributor for availability.

## PowerCut™

### 72, 73, 75 CL
### 72, 73, 75 CK
### 72, 75 CJ

Work more efficiently with 72, 73, 75 CL & CK — 72, 75 CJ chains. Ideal for high-production cutting with long bars and 3/8" pitch saws. This is the square ground version of our LGX series chain.

**Features and Benefits**

- LubriTec™ keeps your saw chain and guide bar oiled, for less friction and longer life
- Blued Cutters deliver high-quality protection against corrosion
- Top-Plate Filing Indicators makes accurate sharpening easier
- Our exclusive OCS-01 Steel delivers greater durability

**3/8"**

**Saw Size**
50–100 cc

**Bar Lengths**
16–36" (40–90 cm)

**Chisel**

**Kickback Safety**

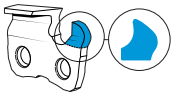

| No. | Gauge | Standard Sequence |
|---|---|---|
| 72CL<br>73CL<br>75CL | .050"<br>.058"<br>.063" | |
| | | **Semi-Skip Sequence** |
| 72CK<br>73CK<br>75CK | .050"<br>.058"<br>.063" | |
| | | **Skip Sequence** |
| 72CJ<br>75CJ | .050"<br>.063" | |

### 72, 73, 75 LPX
### 72 JPX

An ideal chain for professional woodcutters who use 3/8" pitch saws. Low-vibration, full chisel cutters offer top performance. Offset depth gauges prevent cutters from driving into the sidewall of the cut, offering a smoother cut.

**Features and Benefits**

- LubriTec™ keeps your saw chain and guide bar oiled, for less friction and longer life
- Blued Cutters deliver high-quality protection against corrosion
- Top-Plate Filing Indicators makes accurate sharpening easier
- Our exclusive OCS-01 Steel delivers greater durability

**3/8"**

**Saw Size**
50–100 cc

**Bar Lengths**
16–36" (40–90 cm)

**Chisel**

**Kickback Safety**

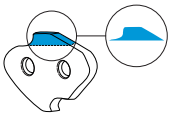

| No. | Gauge | Standard Sequence |
|---|---|---|
| 72LPX<br>73LPX<br>75LPX | .050"<br>.058"<br>.063" | |
| | | **Skip Sequence** |
| 72JPX | .050" | |

Chain part numbers printed in *red italics* have been obsoleted. Contact your authorized Oregon distributor for availability. *Available in DuraCut™ chain version, page FOR 122*

## PowerCut™

### 68 LX
### 68 JX

A top performing, heavy-duty, big-timber chain, for professionals who use large saws. Full chisel cutters offer top performance.

**Features and Benefits**

- LubriTec™ keeps your saw chain and guide bar oiled, for less friction and longer life
- Blued Cutters deliver high-quality protection against corrosion
- Top-Plate Filing Indicators makes accurate sharpening easier
- Our exclusive OCS-01 Steel delivers greater durability

| No. | Gauge | Standard Sequence |
|---|---|---|
| 68LX | .063" | |
| | | **Skip Sequence** |
| 68JX | .063" | |

**.404"**

**Saw Size**
65 cc & Larger

**Bar Lengths**
20" (50 cm) & Larger

**Chisel** **Kickback Safety**

7

### 68 CL
### 68 CJ

68 CL & CJ helps you get more done. Ideal for high-production cutting with long bars and .404"- pitch saws. This is the square ground version of our 68LX.

**Features and Benefits**

- LubriTec™ keeps your saw chain and guide bar oiled, for less friction and longer life
- Blued Cutters deliver high-quality protection against corrosion
- Top-Plate Filing Indicators makes accurate sharpening easier
- Our exclusive OCS-01 Steel delivers greater durability

| No. | Gauge | Standard Sequence |
|---|---|---|
| 68CL | .063" | |
| | | **Skip Sequence** |
| 68CJ | .063" | |

**.404"**

**Saw Size**
65 cc & Larger

**Bar Lengths**
20" (50 cm) & Larger

**Chisel** **Kickback Safety**

7

## PowerCut™



**59 L**
**59 J**

A big-timber, heavy-duty chain for professionals who use large saws. Full chisel cutters offer top performance. Get less kickback without the added weight or bulk of other methods because of the depth gauge design.

**Features and Benefits**

- LubriTec™ keeps your saw chain and guide bar oiled, for less friction and longer life
- Top-Plate Filing Indicators makes accurate sharpening easier
- Our exclusive OCS-01 Steel delivers greater durability

| No. | Gauge | Standard Sequence |
|---|---|---|
| 59L | .063" | |
| | | **Skip Sequence** |
| 59J | .063" | |

**.404"**

**Saw Size**
65 cc & Larger

**Bar Lengths**
20" (50 cm) & Larger

**Chisel**

**Kickback Safety**

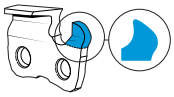

# SpeedCut™

Whether you're an arborist or a firewood cutter, high volumes of wood require speed, efficiency, and a strong performing saw chain to get the job done right. Oregon's SpeedCut exemplifies the efficiency, speed, and top performance of the entire SpeedCut cutting system.

SpeedCut is easy to use because it uses a narrow kerf cutting system and is easy to maintain. Narrow kerf requires less power than other cutting systems, making more efficient cuts that allows you to finish the job quickly and easily. Professionals will appreciate SpeedCut's unbeatable performance, and will love how easy it is to maintain.

**• Efficiency • Fast • Easy**

Narrow Kerf

## 95 TXL

Work faster, sharper, easier, with a more efficient saw chain. Ideal for arborists and property owners who want top performance. 95TXL is for saws up to 55 cc. (Replaces 95VPX.) Oregon® SpeedCut 95TXL narrow kerf cutting systems are more efficient, needing less power from the saw than standard cutting systems. Low-vibration, Micro Chisel cutters have small-radius working corners for excellent performance and easy maintenance. Get a faster, easier cuts with a reshaped cutting surface. A sharper, more durable cutting edge from a new precision grind and optimized cutting angle. Always use SpeedCut narrow kerf chain in combination with SpeedCut or other narrow kerf bars.

**Features and Benefits**

- LubriTec™ keeps your saw chain and guide bar oiled, for less friction and longer life
- Blued Cutters deliver high-quality protection against corrosion
- Expanded Top-Plate Filing Indicators and depth gauge Filing Indicators area make accurate sharpening easier
- Gold Loop Start Indicator makes sharpening easier with start and stop identification
- Our exclusive OCS-01 Steel delivers greater durability

| No. | Gauge | Standard Sequence |
|---|---|---|
| 95TXL | .050" | |

**.325"**

**Saw Size**

38–55 cc

**Bar Lengths**

13–20" (32–50 cm)

**Micro Chisel**

**Kickback Safety**

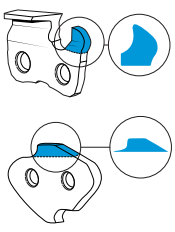

See pages FOR 106–107 for more infomation on the SpeedCut system.

## SpeedCut™

Narrow Kerf

### 95 VPX

A more efficient chain, 95VPX is ideal for arborists and property owners seeking top performance. For saws up to 55 cc. Our narrow kerf cutting systems are more efficient, needing less power from the saw than standard cutting systems. Always use narrow kerf chain in combination with narrow kerf bars. Low-vibration, Micro Chisel® cutters have small-radius working corners for excellent performance and easy maintenance.

**Features and Benefits**

- LubriTec™ keeps your saw chain and guide bar oiled, for less friction and longer life
- Blued Cutters deliver high-quality protection against corrosion
- Top-Plate Filing Indicators makes accurate sharpening easier
- Our exclusive OCS-01 Steel delivers greater durability

| No. | Gauge | Standard Sequence |
|---|---|---|
| *95VPX* | .050" | |

### .325"

**Saw Size**

38–55 cc

**Bar Lengths**

13–18" (32–45 cm)

**Micro Chisel**

**Kickback Safety**

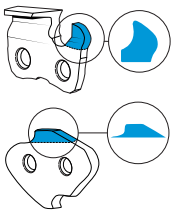

## Coming Soon!

### SpeedCut Nano 80 TXL

Available in 2019, SpeedCut Nano 80 TXL is an innovative new cutting system designed specifically for today's high-performance battery-powered and compact light-weight gas chainsaws. 80 TXL will be Oregon's most efficient saw chain for 1-3 HP chainsaws. Our patented design includes the following features:

- Increased cutting speed
- Longer run time per charge for battery saws
- Reduced tendency to stall in the cut
- Multi-axis grind technology for exceptionally clean cuts

SpeedCut Nano 80 TXL is part of an all-NEW .325" Low Profile™ cutting system – saw chain, guide bar, and sprocket – which must be used together and are not compatible with any other existing cutting systems.

## New Cutting System

SpeedCut Nano 80 TXL is the latest cutting system innovation from Oregon, specifically engineered to deliver maximum performance and efficiency for battery-powered and 20–35cc gas chainsaws.

A BETTER SAW STARTS HERE

# VersaCut™

Arborists, landscapers, and loggers have encountered every type of tree, shrub, stump, limb, and twig. If it's outdoors and made of wood, you've probably cut or maintained it.

Oregon's VersaCut was designed for you. VersaCut delivers both versatility and durability. The semi-chisel and Micro Chisel® cutters makes sure you stay sharp longer for all-day cutting.

VersaCut is also easy to maintain; and it stays sharp longer in a variety of cutting conditions.

Clean wood or dirty wood, frozen or green, VersaCut is the smart choice for tree professionals.

**• Easy • Durable • Versatile**

## VersaCut

### 91 VXL

91VXL is a high-performance, Low Profile™ chain. It's ideal for professional arborists and orchardists who use light-weight chain-saws. Cutter top-plates are 33% longer than standard 91 cutters. Low vibration, semi-chisel cutters provide an aggressive cutting edge with a forgiving sharpening profile and good stay-sharp.

**Features and Benefits**

- LubriTec™ keeps your saw chain and guide bar oiled, for less friction and longer life
- Blued Cutters deliver high-quality protection against corrosion

| No. | Gauge | Standard Sequence |
|---|---|---|
| 91VXL | .050" | |

**3/8" Low Profile™**

**Saw Size**

Up to 42 cc

**Bar Lengths**

Up to 18" (45 cm)

**Semi-Chisel**

**Kickback Safety**

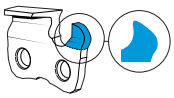

## VersaCut™

### 72, 73, 75 DPX
### 72 APX

An ideal choice for professional users who cut in a variety of conditions. Easy to maintain. Low-vibration, semi-chisel cutter designs work fast. This design is typically more tolerant of sharpening errors than chisel cutters.

**Features and Benefits**

- LubriTec™ keeps your saw chain and guide bar oiled, for less friction and longer life
- Blued Cutters deliver high-quality protection against corrosion
- Top-Plate Filing Indicators makes accurate sharpening easier
- Our exclusive OCS-01 Steel delivers greater durability

| No. | Gauge | Standard Sequence |
|---|---|---|
| 72DPX<br>73DPX<br>75DPX | .050"<br>.058"<br>.063" | |
| | | **Skip Sequence** |
| 72APX | .050" | |

**3/8"**

**Saw Size**
50–100 cc

**Bar Lengths**
16–36" (40–90 cm)

**Semi-Chisel**

**Kickback Safety**

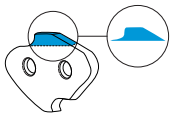

### 27 X
### 27 AX

This is a heavy-duty, high-performance chain for professionals using large saws. Ideal for those who prefer the durability and easy maintenance of Micro Chisel® cutters. Micro Chisel cutters have small-radius working corners for excellent performance and easy maintenance.

**Features and Benefits**

- LubriTec keeps your saw chain and guide bar oiled, for less friction and longer life
- Blued Cutters deliver high-quality protection against corrosion
- Our exclusive OCS-01 Steel delivers greater durability

| No. | Gauge | Standard Sequence |
|---|---|---|
| 27X | .063" | |
| | | **Skip Sequence** |
| 27AX | .063" | |

**.404"**

**Saw Size**
65 cc & Larger

**Bar Lengths**
20" (50 cm) & Larger

**Micro Chisel**

**Kickback Safety**

# ControlCut™

If you own or maintain a property, you will inevitably manage a lot of smaller jobs. They add up fast. Oregon's ControlCut saw chain is ideal for all light-duty work, because it gives you a smooth cut every single time and it's easy to maintain.

ControlCut has the longevity for bigger jobs, too. ControlCut's semi-chisel and Micro Chisel® cutting styles are ideal for property owners who need to cut the occasional tree limb, as well as experienced landscapers and orchardists who cut trees for a living.

ControlCut is low maintenance, and it stays sharper so you get jobs done quickly and easily.

**• Smooth • Controlled • Forgiving**

## ControlCut™

### 25 AP

Get your smallest jobs done just right. 25AP is light-weight, smooth chain, ideal for pruning — our Micro Chisel® cutters have small-radius working corners for excellent performance, and they are easy to maintain. The 25AP is small and light-weight, making it easy to use and maneuver.

- Available in Sculptor™ chain version – see page FOR 125

| No. | Gauge | Standard Sequence |
|---|---|---|
| 25AP | .050" | |

**1/4"**

**Saw Size**
Up to 38 cc

**Bar Lengths**
Up to 16" (40 cm)

**Micro Chisel** **Kickback Safety**

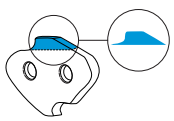

## ControlCut™

### 91 PXL

A high-performance Low Profile chain, 91PXL is ideal for property owner or professionals using light-weight chainsaws, who prefer low kickback. Cutter top-plates are 33% longer than standard 91 cutters. The low vibration, low kickback semi-chisel cutters give you an aggressive cutting edge. 91PXL also offers a forgiving sharpening profile and good stay-sharp. Bumper drive link paired with depth gauge design offers reduced kickback with strong performance.

**Features and Benefits**

- LubriTec™ keeps your saw chain and guide bar oiled, for less friction and longer life
- Blued Cutters deliver high-quality protection against corrosion

| No. | Gauge | Standard Sequence |
|---|---|---|
| 91PXL | .050" | |

**3/8" Low Profile™**

**Saw Size**
Up to 42 cc

**Bar Lengths**
Up to 18" (45 cm)

**Semi-Chisel**

**Kickback Safety**

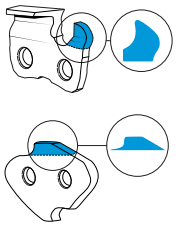

### 20, 21, 22 BPX

An ideal choice for regular users of saws such as property owners and landscapers. The low-vibration, Micro Chisel® cutters have small-radius working corners for excellent performance and easy maintenance. Low kickback design.

**Features and Benefits**

- LubriTec keeps your saw chain and guide bar oiled, for less friction and longer life
- Blued Cutters deliver high-quality protection against corrosion
- Top-Plate Filing Indicators makes accurate sharpening easier
- Our exclusive OCS-01 Steel delivers greater durability

| No. | Gauge | Standard Sequence |
|---|---|---|
| 20BPX | .050" | |
| 21BPX | .058" | |
| 22BPX | .063" | |

**.325"**

**Saw Size**
38–62 cc

**Bar Lengths**
13–20" (32–50 cm)

**Micro Chisel**

**Kickback Safety**

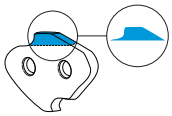

# DuraCut™ (formerly MultiCut™)

Woodcutters face challenging environments all the time. Fire-damaged trees can be unstable and require extra care. Trees in sandy environments, like desert ironwood, are notoriously tough on saw chains.

Oregon's DuraCut is made for these environments. DuraCut has an advanced plating process with extra layers of chrome that allows you to cut up to three times longer than conventional saw chain.

Working a site with standard filing tools? No problem. You can use your usual files to sharpen the chain and get back to work. DuraCut is the durable solution for your toughest woodcutting jobs.

**• Durable • Tough**

## DuraCut™

### M91 VXL

Work longer in dirty conditions with this more durable version of our aggressive 91VXL chain; cuts up to 3 times longer. 91VXL is a high-performance Low Profile™ chain. Low vibration, semi-chisel cutters provide an aggressive cutting edge with a forgiving sharpening profile. Maintain with standard maintenance tools.

**Features and Benefits**

- Extra heavy-duty chrome and an advanced plating process enables exceptional durability and stay-sharp
- LubriTec™ keeps your saw chain and guide bar oiled, for less friction and longer life
- Blued Cutters deliver high-quality protection against corrosion

| No. | Gauge | Standard Sequence |
|---|---|---|
| M91VXL | .050" | |

### 3/8" Low Profile™

**Saw Size**
Up to 42 cc

**Bar Lengths**
Up to 18" (45 cm)

**Semi-Chisel**

**Kickback Safety**

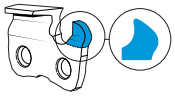

## DuraCut™

### M20, 21, 22 BPX

Cut effectively in dirty and abrasive conditions with this more durable version of our high performing .325" pitch BPX chain; cuts up to 3 times longer. The low-vibration, Micro Chisel® cutters have small-radius working corners for excellent performance and easy maintenance. Low kickback design. Maintain with standard maintenance tools.

**Features and Benefits**

- Extra heavy-duty chrome and an advanced plating process enables exceptional durability and stay-sharp
- LubriTec™ keeps your saw chain and guide bar oiled, for less friction and longer life
- Blued Cutters deliver high-quality protection against corrosion
- Top-Plate Filing Indicators makes accurate sharpening easier
- Our exclusive OCS-01 Steel delivers greater durability

**.325"**

**Saw Size**
38–62 cc

**Bar Lengths**
13–20" (32–50 cm)

**Micro Chisel**

**Kickback Safety**

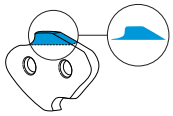

| No. | Gauge | Standard Sequence |
|---|---|---|
| M20BPX | .050" | |
| M21BPX | .058" | |
| M22BPX | .063" | |

### M72, 73, 75 DPX

Cut more between sharpenings in the toughest, dirtiest, or most abrasive conditions with this more durable version of our high-performing 3/8" pitch DPX chain; cuts up to 3 times longer. Easy to maintain. Low-vibration, semi-chisel cutter designs perform strong for professional users. Maintain with standard maintenance tools.

**Features and Benefits**

- Extra heavy-duty chrome and an advanced plating process enables exceptional durability and stay-sharp
- LubriTec™ keeps your saw chain and guide bar oiled, for less friction and longer life
- Blued Cutters deliver high-quality protection against corrosion
- Top-Plate Filing Indicators makes accurate sharpening easier
- Our exclusive OCS-01 Steel delivers greater durability

**3/8"**

**Saw Size**
50–100 cc

**Bar Lengths**
16–36" (40–90 cm)

**Semi-Chisel**

**Kickback Safety**

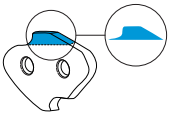

| No. | Gauge | Standard Sequence |
|---|---|---|
| M72DPX | .050" | |
| M73DPX | .058" | |
| M75DPX | .063" | |

## DuraCut™



### M20, 21, 22 LPX

Cut effectively in dirty and abrasive conditions with this more durable version of our high-performing .325" pitch LPX chain; cuts up to 3 times longer. (Formerly named MultiCut™.) Maintain with standard maintenance tools.

**Features and Benefits**

- Extra heavy-duty chrome and an advanced plating process enables exceptional durability and stay-sharp
- LubriTec™ keeps your saw chain and guide bar oiled, for less friction and longer life
- Blued Cutters deliver high-quality protection against corrosion
- Top-Plate Filing Indicators makes accurate sharpening easier
- Our exclusive OCS-01 Steel delivers greater durability

**.325"**

**Saw Size**

38–62 cc

**Bar Lengths**

13–20" (32–50 cm)

**Chisel**

7

**Kickback Safety**

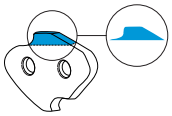

| No. | Gauge | Standard Sequence |
|---|---|---|
| *M20LPX* | .050" | |
| *M21LPX* | .058" | |
| *M22LPX* | .063" | |

### M72, 73, 75 LPX

Cut more between sharpenings in the toughest, dirtiest, or most abrasive conditions with this more durable version of our high-performing 3/8" pitch LPX chain; cuts up to 3 times longer. (Formerly named MultiCut™.) Maintain with standard maintenance tools.

**Features and Benefits**

- Extra heavy-duty chrome and an advanced plating process enables exceptional durability and stay-sharp
- LubriTec™ keeps your saw chain and guide bar oiled, for less friction and longer life
- Blued Cutters deliver high-quality protection against corrosion
- Top-Plate Filing Indicators makes accurate sharpening easier
- Our exclusive OCS-01 Steel delivers greater durability

**3/8"**

**Saw Size**

50–100 cc

**Bar Lengths**

16–36" (40–90 cm)

**Chisel**

7

**Kickback Safety**

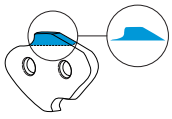

| No. | Gauge | Standard Sequence |
|---|---|---|
| *M72LPX* | .050" | |
| *M73LPX* | .058" | |
| *M75LPX* | .063" | |

Chain part numbers printed in *red italics* have been obsoleted. Contact your authorized Oregon distributor for availability.

# RipCut™

Any saw mill worker will tell you that ripping chain is different from all other saw chains. You need a special kind of chain for ripping cuts, the kind that transforms raw timber into the boards and planks used in homes and businesses. Oregon's RipCut is designed specifically for chain-type sawmills, producing smooth cuts with supreme efficiency.

RipCut's precise ripping cuts give you a smooth surface every time you cut parallel to the wood grain. RipCut isn't recommended for hand-held use, but that suits experienced millwrights just fine.

**• Ripping • Smooth**

## RipCut™

### 72, 73, 75 RD

Specially made for ripping — making cuts parallel to the wood grain. 72, 73, 75 RD has a special ripping application grind for making dimensional boards and planks from larger timbers. For use on chain-type sawmills. Not recommended for hand-held use.

**Features and Benefits**

- LubriTec™ keeps your saw chain and guide bar oiled, for less friction and longer life
- Our exclusive OCS-01 Steel delivers greater durability

| No. | Gauge | Standard Sequence |
|---|---|---|
| 72RD | .050" | |
| 73RD | .058" | |
| 75RD | .063" | |

## 3/8"

**Saw Size**

For ripping cuts only. Do not use these chains for any type of cutting other than ripping

**Micro Chisel** **Kickback Safety**

## RipCut™

### 27 R
### 27 RX

Specially made for ripping — making cuts parallel to the wood grain. 27R, RX has a special ripping application grind for making dimensional boards and planks from larger timbers. The 27RX is a super-skip sequence to allow greater chip clearance when making extra wide cuts. For use on chain-type sawmills. Not recommended for hand-held use.

**Features and Benefits**

- LubriTec keeps your saw chain and guide bar oiled, for less friction and longer life
- Our exclusive OCS-01 Steel delivers greater durability

| No. | Gauge | Standard Sequence |
|---|---|---|
| 27R | .063" | |
| | | **Super-Skip Sequence** |
| 27RX | .063" | |

## .404"

**Saw Size**

For ripping cuts only. Do not use these chains for any type of cutting other than ripping

**Micro Chisel**

**Kickback Safety**

# Sculptor™

Carvers require precision cutting tools to transform wood of different shapes and sizes into works of art. Sculptor was designed with carvers and precise detail work in mind. Sculptor's Micro Chisel cutters give you the freedom to create fine detail and finishing work.

Sculptor is also easy to maintain and light-weight for optimum maneuverability. It is the perfect tool for carvers, pruners, and any other user who values extra-fine cutting.

**25 A**

**25 F**

**25A** – For users with bars with a nose radius of 12 mm or less designed for carving. Micro Chisel® cutters have small-radius working corners to give you excellent performance with easy maintenance. Small size and light weight make 25A easy to use and maneuver.

**25F** – For users with bars with a nose radius of 12 mm or less designed for carving. The "full-house" sequencing makes 25F the preferred chain of some carvers cutting fine detail and finishing work. Micro Chisel cutters have small-radius working corners to give you excellent performance with easy maintenance. Small size and light weight make the 25F easy to use and maneuver.

| No. | Gauge | Standard Sequence |
|---|---|---|
| *25A* | .050" | |

| No. | Gauge | Full House Sequence |
|---|---|---|
| 25F | .050" | |

## 1/4"

**Saw Size**

Up to 38 cc

**Bar Lengths**

Sculptor Bar Only
See Guide Bar section pg. FOR 166

**Micro Chisel**

**Warning:** Failure to use this chain on bars with nose radii of 12 mm or smaller can result in severe kickback

Chain part numbers printed in *red italics* have been obsoleted. Contact your authorized Oregon distributor for availability.

# AdvanceCut™

Homeowners need a chainsaw within arm's reach for occasional yardwork and even storm-damaged trees. You also need a saw chain advanced enough to tackle tough jobs, but user-friendly enough and forgiving for occasional use.

Oregon's AdvanceCut was created for "DIY" homeowners because of its solid performance and reliable durability.

Low kickback design makes AdvanceCut an ideal – and dependable – choice for maintaining your property's trees. AdvanceCut is an essential tool for the discerning homeowner.

**• Dependable • Advanced**

## AdvanceCut™

### 90 PX

Maintain your trees with ease. 90PX offers higher chain efficiency, ideal for small, low-powered saws great for homeowners and landscapers (replaces 90SG). Our narrow kerf cutting systems increase efficiency. They need less power from the saw than standard cutting systems. The narrow .043" gauge reduces the weight of the bar and chain by roughly 15%. Low-vibration, low kickback Chamfer Chisel™ cutters' twin cutting corners offer outstanding performance. They are durable, easy to maintain and forgiving, comparable to round-cornered chains. Bumper drive link paired with depth gauge design, offers reduced kickback with strong performance. Always use with guide bars designed for narrow kerf saw chain.

**Features and Benefits**

- LubriTec™ keeps your saw chain and guide bar oiled, for less friction and longer life
- Top-Plate Filing Indicators makes accurate sharpening easier

| No. | Gauge | Standard Sequence |
|---|---|---|
| 90PX | .043" | |

### 3/8" Low Profile™

**Saw Size**

Up to 42 cc

**Bar Lengths**

Up to 16" (40 cm)

**Chamfer Chisel**

**Kickback Safety**

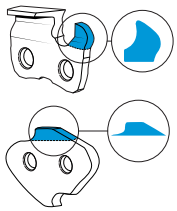

## AdvanceCut™

### 91 PX

91PX is for homeowners and occasional users who want a low-vibration and low kickback saw chain. The Chamfer Chisel cutters' twin cutting corners offer outstanding performance. They are durable, easy to maintain and forgiving, comparable to round-cornered chains. Bumper drive link paired with depth gauge design, offers reduced kickback with strong performance.

**Features and Benefits**

- LubriTec™ keeps your saw chain and guide bar oiled, for less friction and longer life

| No. | Gauge | Standard Sequence |
|---|---|---|
| 91PX | .050" | |

**3/8" Low Profile™**

**Saw Size**
Up to 42 cc

**Bar Lengths**
Up to 18" (45 cm)

**Chamfer Chisel**

**Kickback Safety**

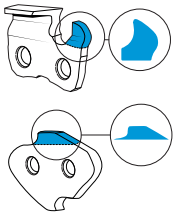

### 72, 73, 75 V

Choose 72, 73 or 75V for added safety. An ideal, low kickback chain for homeowners and occasional users. The low-vibration, full chisel cutters offer reliable performance. Smooth cutting and low kickback performance via our unique, patented, bent-over depth gauges.

**Features and Benefits**

- LubriTec™ keeps your saw chain and guide bar oiled, for less friction and longer life
- Top-Plate Filing Indicators makes accurate sharpening easier
- Our exclusive OCS-01 Steel delivers greater durability

| No. | Gauge | Standard Sequence |
|---|---|---|
| 72V | .050" | |
| 73V | .058" | |
| 75V | .063" | |

**3/8"**

**Saw Size**
50–100 cc

**Bar Lengths**
16–32" (40–80 cm)

**Chisel**

**Kickback Safety**

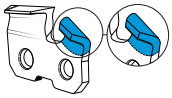

# PowerSharp®

Occasional saw chain users sometimes spend too much time using hand files to sharpen dull chain, or they lose an afternoon taking it to a dealer for professional sharpening. Fumbling an inexact sharpening is a thing of the past with PowerSharp. PowerSharp takes saw chain from dull to sharp in as little as three seconds.

PowerSharp is also ideal for professional users who want greater productivity on the job. Professionals get precise and knife-sharp edges quickly and easily – every time.

**• Fast • Easy • Precise**

## Sharpens On the Saw, On the Job, In Seconds™

PowerSharp® is an easy-to-use, precision sharpening system that gives chainsaw users the power to sharpen their chain in a matter of seconds with a simple attachment. Patent-pending features make PowerSharp a major advance over other sharpening methods.

## Easy to Use

PowerSharp is a system that includes the PowerSharp chain, the PowerSharp guide bar, and the PowerSharp bar-mount sharpener. Together, they work to make sharpening simple and easy.

### Attach

When the chain dulls, simply attach the bar-mount sharpener to the PowerSharp guide bar. Twin guide holes in the tip of the bar make perfect alignment fool proof.

### Sharpen

Press the tip of the sharpener to a solid surface for 3 – 5 seconds.

### Cut

And it's back to the job, working faster with less effort.

## PowerSharp®

### 91 PS

Now you can sharpen fast, easy, and on the saw with the PowerSharp system. Includes the 91PS PowerSharp saw chain; a guide bar designed for PowerSharp; and the PowerSharp bar-mount sharpener. Sharpen the 91PS chain in a flash. Go from dull to sharp in just three seconds with this easy-to-use, precision sharpening system. Stays sharp three times longer than 91PX saw chain.

**Features and Benefits**

- LubriTec™ keeps your saw chain and guide bar oiled, for less friction and longer life

| No. | Gauge | Standard Sequence |
|---|---|---|
| 91PS | .050" | |

### 3/8" Low Profile™

**Saw Size**

Up to 42 cc

**Bar Lengths**

Up to 18" (45 cm)

**PowerSharp**

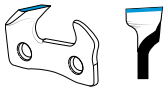

**Kickback Safety**

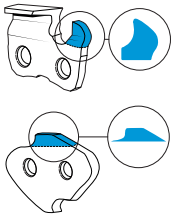

On pages FOR 20–97, the PowerSharp diamond identifies the chainsaw models capable of running the PowerSharp sharpening system.

### Fits Most Popular Chainsaw Brands

| Tail Mount * | Bar Length | Starter Kit A | Chain & Sharpening Stone B | Sharpener Housing |
|---|---|---|---|---|
| **A041** | 12" | 551664 | PS45 | |
| | 14" | 541652 | PS52 | |
| | 16" | 541656 | PS56 | |
| | 18" | 541662 | PS62 | |
| **A074** | 12" | 553819 | PS44 | |
| | 14" | 541650 | PS50 | |
| | 16" | 541655 | PS55 | |
| **A095** | 14" | 544852 | PS52 | |
| | 16" | 544856 | PS56 | |

555745

Find out more at PowerSharp.com

## Oregon®, Carlton®, Stihl®, Husqvarna®, & Windsor® Chain Cross-Reference Chart



| | | | | | OREGON | Stihl | | Husqvarna | Carlton | | Windsor |
|---|---|---|---|---|---|---|---|---|---|---|---|
| Pitch | Gauge | Grind | Cutter Type | Sequence | P/N | P/N | Alt P/N | P/N | P/N | Alt P/N | P/N |
| 1/4" | .050" | Round | Micro Chisel® | Standard | **25AP** | 13RM | | | E1MC-BL | E1MC | 50K |
| 3/8 Low Profile™ | .043" | Round | Chamfer | Standard | ***90SG*** | 61PMN | 61PMM3 | | N4C-BL | N4C | 43RG |
| | | Round | Chamfer | Standard | **90PX** | 61PMN | 61PMM3 | H38 | N4C-BL | N4C | 43RG |
| | .050" | Round | Chamfer | Standard | **91PX** | 63PM1 | 63PM3 | H37 | N1C-BL | | 50RG |
| | | Round | PowerSharp® | Standard | **91PS** | | | | | | |
| | | Round | Semi-Chisel | Standard | **91PXL** | 63PM1 | 63PM3 | | N1C-BL | | 50RG |
| | | Round | Semi-Chisel | Standard | **91VXL** | 63PM | | H35 | N1C | | 50R |
| | | Round | Semi-Chisel | Standard | **M91VXL** | | | | | | |
| .325" | .050" | Round | Micro Chisel | Standard | ***95VPX*** | | | H30 | K1NK-BL | K1NK | 50JSG |
| | | Round | Micro Chisel | Standard | **95TXL** | | | H30, SP33G | K1NK-BL | K1NK | 50JSG |
| | | Round | Micro Chisel | Standard | **20BPX** | 23RM | | H22 | K1C-BL | K1C | 50J |
| | | Round | Chisel | Standard | **20LPX** | 23RS | | H23 | K1L-BL | K1L | 50JL |
| | | Round | Micro Chisel | Standard | **M20BPX** | | | | | | |
| | | Round | Chisel | Standard | ***M20LPX*** | | | | | | |
| | .058" | Round | Micro Chisel | Standard | **21BPX** | 25RM | | H25 | K2C-BL | K2C | 58J |
| | | Round | Chisel | Standard | **21LPX** | 25RS | | H21 | K2L-BL | K2L | 58JL |
| | | Round | Micro Chisel | Standard | **M21BPX** | | | | | | |
| | | Round | Chisel | Standard | ***M21LPX*** | | | | | | |
| | .063" | Round | Micro Chisel | Standard | **22BPX** | 26RM | | H28 | K3C-BL | K3C | 63J |
| | | Round | Chisel | Standard | **22LPX** | 26RS | | H26 | K3L-BL | K3L | 63JL |
| | | Round | Micro Chisel | Standard | **M22BPX** | | | | | | |
| | | Round | Chisel | Standard | ***M22LPX*** | | | | | | |
| 3/8" | .050" | Round | Chisel | Standard | **72V** | 33RSS | 33RM2 | H80 | A1LM-GL | A1EP-GL | |
| | | Round | Chisel | Standard | **72EXL, *LGX*** | 33RS | 33RS | H47 | A1LM | | 50APL |
| | | Round | Chisel | Standard | **72LPX** | | | H46 | A1LM-BL | | 50APLG |
| | | Round | Semi-Chisel | Standard | **M72DPX** | | | | | | |
| | | Round | Chisel | Standard | ***M72LPX*** | | | | | | |
| | | Round | Chisel | Skip | **72EXJ, *JGX*** | 33RSF | | H47S | A1LM-SK | | 50APLX |
| | | Round | Chisel | Skip | **72JPX** | 33RSF | | H46S | A1LM-BLSK | | |
| | | Round | Semi-Chisel | Standard | **72DPX** | 33RM1 | 33RM | H51 | A1EP | A1EP-BL | 50AG |
| | | Round | Semi-Chisel | Standard | **72RD** | | | | A1EP-RP | | |
| | | Round | Semi-Chisel | Skip | **72APX** | 33RMF | | | A1EP-SK | | |
| | .050" | Square | Chisel | Standard | **72CL** | 33RSL | | | | | |
| | | Square | Chisel | Semi-Skip | **72CK** | 33RSLHK | | | | | |
| | | Square | Chisel | Skip | **72CJ** | 33RSLF | | H82 | A1LM-SK-SG | | |
| | .058" | Round | Chisel | Standard | **73V** | | | H81 | A2LM-GL | A2EP-GL | |
| | | Round | Chisel | Standard | **73EXL, *LGX*** | 35RS | | H48 | A2LM | | 58APL |
| | | Round | Chisel | Standard | **73LPX** | 35RS1 | | H42 | A2LM-BL | | 58APLG |
| | | Round | Semi-Chisel | Standard | **M73DPX** | | | | | | |
| | | Round | Chisel | Standard | ***M73LPX*** | | | | | | |
| | | Round | Chisel | Skip | **73EXJ, *JGX*** | | | H48S | A2LM-SK | | 58APLX |
| | | Round | Semi-Chisel | Standard | **73DPX** | 35RM1 | | H54 | A2EP | A2EP-BL | 58AG |
| | | Round | Semi-Chisel | Standard | **73RD** | | | | A2EP-RP | | |

Saw chain complies with low kickback performance requirements (FOR 2–3)
Saw chain does not comply with low kickback performance requirements (FOR 2–3)

## Oregon®, Carlton®, Stihl®, Husqvarna®, & Windsor® Chain Cross-Reference Chart

| | | | | | OREGON | Stihl | | Husqvarna | Carlton | | Windsor |
|---|---|---|---|---|---|---|---|---|---|---|---|
| Pitch | Gauge | Grind | Cutter Type | Sequence | P/N | P/N | Alt P/N | P/N | P/N | Alt P/N | P/N |
| 3/8" | .063" | Round | Chisel | Standard | **75V** | 36RS3 | | | A3LM-GL | A3EP-GL | |
| | | Round | Chisel | Standard | **75EXL, *LGX*** | 36RS | 36RS | H50 | A3LM | | 63APL |
| | | Round | Chisel | Standard | **75LPX** | 36RS1 | | H45 | A3LM-BL | | 63APLG |
| | | Round | Semi-Chisel | Standard | **M75DPX** | | | | | | |
| | | Round | Chisel | Standard | ***M75LPX*** | | | | | | |
| | | Round | Chisel | Skip | **75EXJ, *JGX*** | | | H50S | A3LM-SK | | 63APLX |
| | | Round | Semi-Chisel | Standard | **75DPX** | 36RM1 | 36RM | H58 | A3EP | A3EP-BL | 63AG |
| | | Round | Semi-Chisel | Standard | **75RD** | | | | A3EP-RP | | |
| | | Square | Chisel | Standard | **75CL** | 36RSL | | | | | |
| | | Square | Chisel | Standard | **75CLX** | | | | | | |
| | | Square | Chisel | Semi Skip | **75CK** | 36RSLHK | | | | | |
| | | Square | Chisel | Semi Skip | **75CKX** | | | | | | |
| | | Square | Chisel | Skip | **75CJ** | 36RSLF | | H83 | A3LM-SK-SG | | |
| | | Square | Chisel | Skip | **75CJX** | | | | | | |
| .404" | .058" | Round | Chisel | Standard | **58L** | | | | B2LM | | |
| | | Round | Chisel | Skip | **58J** | | | | B2LM-SK | | |
| | | Square | Chisel | Skip | **58CJ** | | | | | | |
| | | Square | Chisel | Skip | **58CL** | | | | | | |
| | .063" | Round | Chisel | Standard | **59L** | 46RS | | H57 | B3LM | | 63BL |
| | | Round | Chisel | Skip | **59J** | | | H57S | B3LM-SK | | |
| | | Round | Chisel | Standard | **68LX** | 46RSK | | | B3LM | | |
| | | Round | Chisel | Skip | **68JX** | 46RSFK | | | | | |
| | | Square | Chisel | Standard | **59CL** | 46RSL | | | | | |
| | | Square | Chisel | Semi Skip | **59CK** | | | | | | |
| | | Square | Chisel | Skip | **59CJ** | 46RSLF | | | | | |
| | | Square | Chisel | Standard | **68CL** | 46RSLK | | | | | |
| | | Square | Chisel | Skip | **68CJ** | 46RSLF | | | | | |
| | | Round | Micro Chisel® | Standard | **27X** | 46RM | | | B3S | B3EP, B3RM35 | 63B |
| | | Round | Micro Chisel | Skip | **27AX** | 46RMF | | | | | |
| | | Round | Micro Chisel | Standard | **27R** | | | | B3H-RP | B3RM10 | 63BR |
| | | Round | Micro Chisel | Skip | **27RA** | | | | B3HR | | |

*Please note. On matters of safety or suitability for saw chain NOT manufactured by Oregon, this chart offers no information or comment. Please read and follow all the notes below to use this chart properly.

### Notes:

- This chart is meant to help those who want to replace other brands of saw chain with a comparable Oregon chain.
- Many saw chains are interchangeable in terms of their fit-up. But interchanging certain types of chains might not be right for some users. Stay safe. Be certain that the chain you choose is right for both the use, and for your level of experience.
- You can learn more about compliance. Find out about the low kickback performance requirements of ANSI B175.1-2012, or about other safety issues as they pertain to any Carlton, Stihl, or Windsor chain. See the documents on saw chain safety provided by those companies.
- This chart should not be used to replace Oregon saw chain with any other brand of chain. Doing so is a misuse of this chart and those who do so assume any and all risks associated with such misuse.
- Chain part numbers printed in *red italics* are now obsolete. Contact your authorized Oregon distributor for availability.

# Saw Chain



## Sharpening Geometry

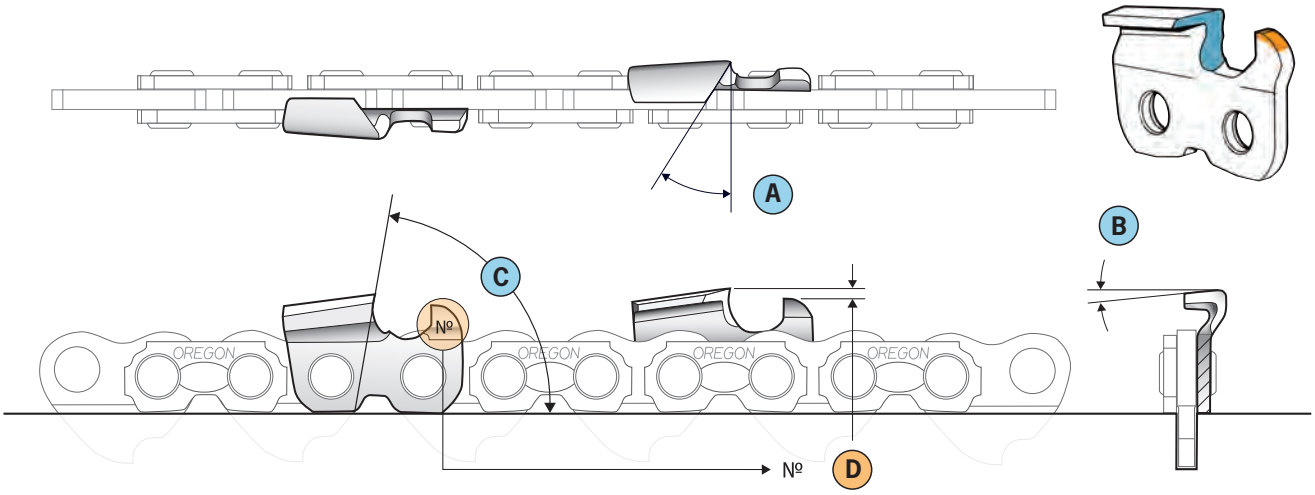


**Sharpening geometry is universal for all chain types.**
See "Filing Angles" or "Grinding Angles" chart on the following pages for recommended A, B, C, or D sharpening or grinding angles by chain type.

## Universal Grinding Wheel Dressing

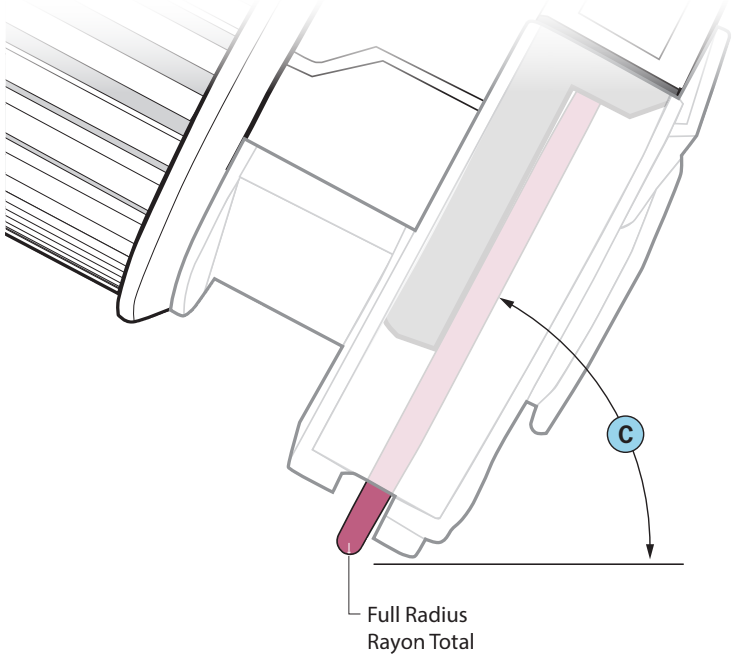


Saw chain complies with low kickback performance requirements (FOR 2–3)
Saw chain does not comply with low kickback performance requirements (FOR 2–3)
Chain part numbers printed in *red italics* have been obsoleted. Contact your authorized Oregon distributor for availability.

## Filing Angles

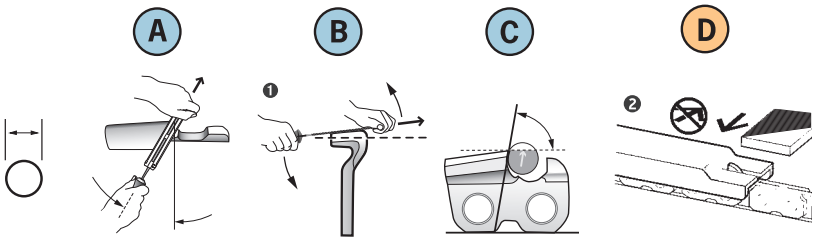


| | | | A | B | C | D |
|---|---|---|---|---|---|---|
| **1/4"** | 25AP | 5/32" | 30° | 10° | 85° | .025" |
| **3/8"** Low Profile™ | 90PX, *90SG* | 4.5 mm | 30° | 0° | 75° | .025" |
| | 91P, 91PX, 91PXL | 5/32" | 30° | 0° | 80° | .025" |
| | 91VXL, M91VXL | 5/32" | 30° | 0° | 80° | .025" |
| **.325"** Low Profile™ | 80TXL | | | | | |
| **.325"** | *95VPX* | 3/16" | 30° | 10° | 70° | .025" |
| | 20, 21, 22BPX, M20, M21, M22BPX | 3/16" | 30° | 10° | 70° | .025" |
| | 95TXL | 3/16" | 30° | 10° | 70° | .025" |
| | 20, 21, 22LPX, *M20*, *M21*, *M22LPX* | 3/16" | 25° | 10° | 60° | .025" |
| **3/8"** | 72, 73, 75V | 7/32" | 25° | 10° | 60° | .025" |
| | 72, 75CJ, CK, CL | ❸ | 45° | 45° | 90° | .025" |
| | 72APX, 72, 73, 75DPX, M72, M73, M75DPX | 7/32" | 30° | 10° | 80° | .025" |
| | 72, 73, 75EXL, EXJ, *LGX*, *JGX*, LPX, JPX | 7/32" | 25° | 10° | 60° | .025" |
| | *M72*, *M73*, *M75LPX* | 7/32" | 25° | 10° | 60° | .025" |
| | 72, 73, 75RD | 7/32" | 10° | 10° | 75° | .025" |
| **.404"** | 27X, 27AX | 7/32" | 30° | 10° | 65° | .030" |
| | 27R, RX, *RA* | 7/32" | 10° | 10° | 75° | .030" |
| | 58CJ, CL, 59CJ, CK, CL | ❸ | 45° | 45° | 85° | .025" |
| | 58, 59J, L | 7/32" | 25° | 10° | 60° | .025" |
| | 68LX, JX | 7/32" | 25° | 10° | 60° | .030" |
| | 68CJ, CL | ❸ | 45° | 45° | — | .030" |

## Grinding Angles

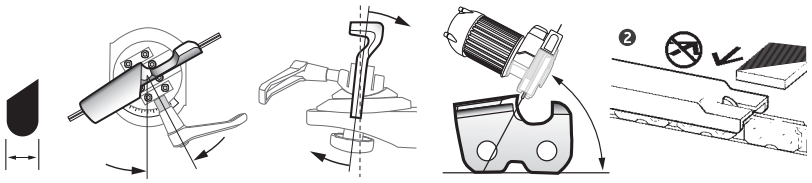


| | | | A | B | C | D |
|---|---|---|---|---|---|---|
| **1/4"** | 25AP | 1/8" | 30° | 10° | 55° | .025" |
| **3/8"** Low Profile | 90PX, *90SG* | 1/8" | 30° | 0° | 55° | .025" |
| | 91P, 91PX, 91PXL | 1/8" | 30° | 0° | 55° | .025" |
| | 91VXL, M91VXL | 1/8" | 30° | 0° | 55° | .025" |
| **.325"** Low Profile™ | 80TXL | | | | | |
| **.325"** | *95VPX* | 3/16" | 30° | 10° | 55° | .025" |
| | 20, 21, 22BPX, M20, M21, M22BPX | 3/16" | 30° | 10° | 55° | .025" |
| | 95TXL | 3/16" | 30° | 10° | 55° | .025" |
| | 20, 21, 22LPX, *M20*, *M21*, *M22LPX* | 3/16" | 25° | 10° | 55° | .025" |
| **3/8"** | 72, 73, 75V | 3/16" | 25° | 10° | 55° | .025" |
| | 72, 75CJ, CK, CL | – | 15° | 45° | – | .025" |
| | 72APX, 72, 73, 75DPX, M72, M73, M75DPX | 3/16" | 30° | 10° | 55° | .025" |
| | 72, 73, 75EXL, EXJ, *LGX*, *JGX*, LPX, JPX | 3/16" | 25° | 10° | 55° | .025" |
| | *M72*, *M73*, *M75LPX* | 3/16" | 25° | 10° | 55° | .025" |
| | 72, 73, 75RD | 3/16" | 10° | 10° | 50° | .025" |
| **.404"** | 27X, 27AX | 3/16" | 30° | 10° | 55° | .030" |
| | 27R, RX, *RA* | 3/16" | 10° | 10° | 50° | .030" |
| | 58CJ, CL, 59CJ, CK, CL | – | 15° | 45° | – | .025" |
| | 58, 59J, L | 3/16" | 25° | 10° | 55° | .025" |
| | 68LX, JX | 3/16" | 25° | 10° | 55° | .030" |
| | 68CJ, CL | – | 15° | 45° | – | .030" |

❶ When using an Oregon® file guide, ALWAYS hold it level, 0-degrees flat on the Top Plate.
❷ Oregon Depth Gauge File (flat file) P/N 12211 must be purchased separately for use with Oregon Depth Gauge Tools.
❸ Square Ground Filing: A 15° cutting edge is the result when the file is held at 45° top-plate angle and 45° down angle.

# Saw Chain

## Sharpening Tools

5-3/4"

4-1/8"

| Pitch | OREGON | | (2) | (12) | (12) | (10) | (5) | (5) |
|---|---|---|---|---|---|---|---|---|
| 1/4" | 25AP | 37534 | 40459 | 70504 ● | 12211 | 22290 | OR 534-18 | OR 4125-18 |
| 3/8" Low Profile™ | 90PX, *90SG* | 31692 | 40461 | 70511 ● | 12211 | 31941 | OR 534-18 | OR 4125-18 |
| | 91P | 37534 | 40459 | 70504 ● | 12211 | 22290 | OR 534-18 | OR 4125-18 |
| | 91PX, 91PX, 91PXL | 37534 | 40459 | 70504 ● | 12211 | 31941 | OR 534-18 | OR 4125-18 |
| | 91VXL, M91VXL | 37534 | 40459 | 70504 ● | 12211 | 31941 | OR 534-18 | OR 4125-18 |
| .325" | *95VPX* | 31690 | 40460 | 70503 ● | 12211 | 31941 | OR 534-316 | OR 4125-316 |
| | 20, 21, 22BPX, M20, M21, M22BPX | 31690 | 40460 | 70503 ● | 12211 | 31941 | OR 534-316 | OR 4125-316 |
| | 95TXL | 31690 | 40460 | 70503 ● | 12211 | 31941 | OR 534-316 | OR 4125-316 |
| | 20, 21, 22LPX | 31690 | 40460 | 70503 ● | 12211 | 31941 | OR 534-316 | OR 4125-316 |
| | *M20, M21, M22LPX* | 31690 | 40460 | 70503 ● | 12211 | 31941 | OR 534-316 | OR 4125-316 |
| 3/8" | 72, 73, 75V | 31686 | 40458 | 70502 ● | 12211 | 31941 | OR 534-316 | OR 4125-316 |
| | 72, 75CJ, CK, CL | – | – | – | 12211 | 22290 | – | – |
| | 72APX, 72, 73, 75DPX, M72, M73, M75DPX | 31686 | 40458 | 70502 ● | 12211 | 31941 | OR 534-316 | OR 4125-316 |
| | 72, 73, 75 EXL, EXJ, *LGX*, *JGX* | 31686 | 40458 | 70502 ● | 12211 | 31941 | OR 534-316 | OR 4125-316 |
| | 72, 73, 75 LPX, JPX | 31686 | 40458 | 70502 ● | 12211 | 31941 | OR 534-316 | OR 4125-316 |
| | *M72, M73, M75LPX* | 31686 | 40458 | 70502 ● | 12211 | 31941 | OR 534-316 | OR 4125-316 |
| | 72, 73, 75RD | 31686 | 40458 | 70502 ● | 12211 | 31941 | OR 534-316 | OR 4125-316 |
| .404" | 27X, 27AX | 31686 | 40458 | 70502 ● | 12211 | 22291 | OR 534-316 | OR 4125-316 |
| | 27R, RX, *RA* | 31686 | 40458 | 70502 ● | 12211 | 22291 | OR 534-316 | OR 4125-316 |
| | 58CJ, CL | – | – | – | 12211 | 22290 | – | – |
| | 59CJ, CK, CL | – | – | – | 12211 | 22290 | – | – |
| | 58, 59J, L | 31686 | 40458 | 70502 ● | 12211 | 31941 | OR 534-316 | OR 4125-316 |
| | 68LX, JX | 31686 | 40458 | 70502 ● | 12211 | 22291 | OR 534-316 | OR 4125-316 |
| | 68CJ, CL | – | – | – | 12211 | 22291 | – | – |

For display packaged grinding wheels, add an "A" suffix to the part number.

Saw chain complies with low kickback performance requirements (FOR 2–3)
Saw chain does not comply with low kickback performance requirements (FOR 2–3)
Chain part numbers printed in *red italics* have been obsoleted. Contact your authorized Oregon distributor for availability.

## Loop Construction Kits & Saw Chain 25-Pack Replacement Parts

| Pitch | OREGON | Loop Kits: Loop Kits (25 ft.) | Saw Chain 25-Pack Replacement Parts: Left-Hand Cutter | Right-Hand Cutter | Tie Strap | Preset Tie Strap | Drive Link | Bumper Drive Link | Bumper Tie Strap |
|---|---|---|---|---|---|---|---|---|---|
| 1/4" | 25AP | 39934 | P23848 | P23849 | P23850 | P23956 | P18960 | P21893 | |
| 3/8" Low Profile™ | *90SG* | 104713 | P104709 | P104710 | P104711 | P108045 | P108043 | | P104708 |
| | 90PX | 559788 | P104709 | P104710 | P104711 | P108045 | P108043 | P570777 | |
| | 91PX | 22140 | P21693 | P21694 | P24295 | P25068 | P21721 | P111822 | |
| | 91PXL | 22140 | 537492 | 537493 | P24295 | P25068 | P21721 | 575285 | |
| | *91VG* | 27300 | 537492 | 537493 | P24295 | P25068 | P21721 | | P26205 |
| | *91VX* | 22140 | P21693 | P21694 | P24295 | P25068 | P21721 | | |
| | M91VXL | 22140 | | | P24295 | P25068 | P21721 | | |
| | 91VXL | 22140 | 537492 | 537493 | P24295 | P25068 | P21721 | | |
| .325" | *95VPX* | 101124 | P101923 | P101924 | P100956 | P101125 | P101024 | *P111509* | |
| | 20BPX | 34914 | P22574 | P22575 | P23843 | P31939 | P31938 | *P111509* | |
| | 21BPX | 34914 | P22574 | P22575 | P23843 | P31939 | P34177 | P34178 | |
| | 22BPX | 39649 | P22574 | P22575 | P23843 | P34185 | P35711 | P37530 | |
| | 95TXL | 576688 | P584531 | P584532 | P571847 | P576686 | P576808 | P571846 | |
| | 20LPX | 34914 | P35745 | P35746 | P23843 | P31939 | P31938 | *P111509* | |
| | 21LPX | 34914 | P35745 | P35746 | P23843 | P31939 | P34177 | P34178 | |
| | 22LPX | 39649 | P35745 | P35746 | P23843 | P34185 | P35711 | P37530 | |
| | M20LPX | 34914 | *P106740* | *P106741* | P23843 | P31939 | P31938 | *P111509* | |
| | M21LPX | 34914 | *P106740* | *P106741* | P23843 | P31939 | P34177 | P34178 | |
| | M22LPX | 39649 | *P106740* | *P106741* | P23843 | P34185 | P35711 | P37530 | |
| | *95R* | 101124 | *P103125* | *P103126* | P100956 | P101125 | P101024 | P111509 | |
| 3/8" | 72V | 30118 | P107795 | P107796 | P23837 | P23910 | P65715 | | |
| | 73V | 30118 | P107795 | P107796 | P23837 | P23910 | P68183 | | |
| | 75V | 39376 | P107795 | P107796 | P23837 | P23921 | P30927 | | |
| | 72CJ, CK, CL | 30118 | P28512 | P28513 | P23837 | P23910 | P65715 | | |
| | 75CJ, CK, CL | 39376 | P28512 | P28513 | P23837 | P23921 | P30927 | | |
| | 72APX, DPX | 30118 | 555914 | 555915 | P23837 | P23910 | P65715 | P20857 | |
| | 73DP(X) | 30118 | 555914 | 555915 | P23837 | P23910 | P68183 | P20856 | |
| | 75DP(X) | 39376 | 555914 | 555915 | P23837 | P23921 | P30927 | P20858 | |
| | 72EXL, EXJ | 596324 | P582369 | P582370 | P581897 | P596323 | P582349 | | |
| | 73EXL, EXJ | 596324 | P582369 | P582370 | P581897 | P596323 | P582353 | | |
| | 75EXL, EXJ | 600146 | P582369 | P582370 | P581897 | P596362 | P582350 | | |
| | *72JGX, LGX* | 30118 | P26197 | P26198 | P23837 | P23910 | P65715 | | |
| | *73JGX, LGX* | 30118 | P26197 | P26198 | P23837 | P23910 | P68183 | | |
| | *75JGX, LGX* | 39376 | P26197 | P26198 | P23837 | P23921 | P30927 | | |
| | 72JPX, LPX | 30118 | P101925 | P101926 | P23837 | P23910 | P65715 | P20857 | |
| | 73JPX, LPX | 30118 | P101925 | P101926 | P23837 | P23910 | P68183 | P20856 | |
| | 75JPX, LPX | 39376 | P101925 | P101926 | P23837 | P23921 | P30927 | P20858 | |
| | 72RD | 30118 | P38951 | P38952 | P23837 | P23910 | P65715 | | |
| | 73RD | 30118 | P38951 | P38952 | P23837 | P23910 | P68183 | | |
| | 75RD | 39376 | P38951 | P38952 | P23837 | P23921 | P30927 | | |
| | M72LPX | 30118 | *P108125* | *P108126* | P23837 | P23910 | P65715 | P20857 | |
| | M73LPX | 30118 | *P108125* | *P108126* | P23837 | P23910 | P68183 | P20856 | |
| | M75LPX | 39376 | *P108125* | *P108126* | P23837 | P23921 | P30927 | P20858 | |
| .404" | 27X, AX | 30147 | P18998 | P18999 | P23825 | P23868 | P17464 | | |
| | 27R, RX, *RA* | 30147 | P35145 | P35146 | P23825 | P23868 | P17464 | | |
| | 58J, L | 30147 | P108795 | P108796 | P23825 | P23868 | P65514 | | |
| | 59J, L | 30147 | P108795 | P108796 | P23825 | P23868 | P65513 | | |
| | 68LX, JX | 521078 | 521090 | 521091 | 521092 | 521093 | 521095 | | |
| | 68CL, CJ | 521078 | 533513 | 533514 | 521092 | 521093 | 521095 | | |

## Properly Sharpened Cutter

**Cutter features**

1. Top Plate
2. Square or Round Working Corner
3. Side Plate
4. Heel
5. Rivet Hole
6. Chassis
7. Gullet
8. Toe
9. Depth Gauge

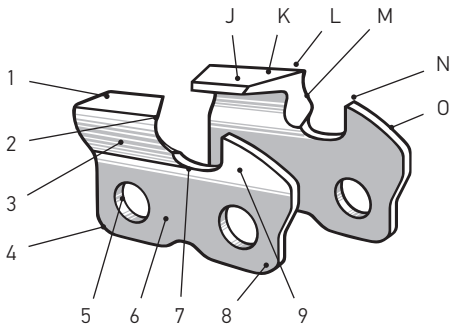


**Sharpened Cutters have:**

J. Correct angle on top plate (degree of angle depends on chain type)
K. Razor-edge on top plate (no light should reflect from this edge)
L. Slightly protruding "hook" or point (curve on non-chisel chain)
M. Razor-edge (with no nicks) on side plate
N. Top of depth gauge at correct height below top plate
O. Front of depth gauge rounded off

## Filing Errors

**Backslope on side plate cutting edge – cutter won't feed into wood**

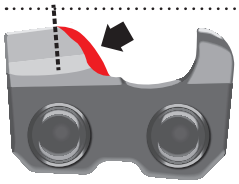

Cause
File held too high

Solution
Refile cutters to recommended angle

**Too-thin top plate causes rapid dulling**

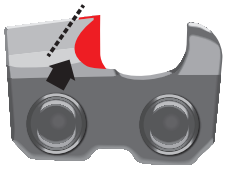

Cause
File handle held too low

Solution
Refile properly, at recommended angle

**To much hook in side plate cutting edge – cutters grab, cut rough**

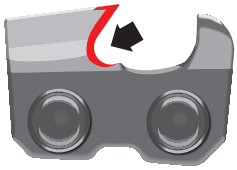

Cause
File held too low or file is too small

Solution
Refile to recommended angle with right size file

**Top plate angle less than recommended – slow cutting, excess wear on chain and bar**

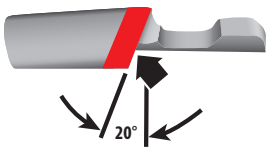


Cause
File held at less than recommended angle

Solution
Refile at correct angle

**Flat top plate cutting angle – chain won't feed into wood, won't cut**

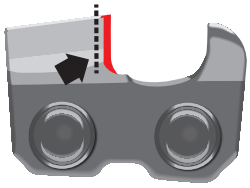

Cause
File handle held too high

Solution
Refile properly at recommended angle

**Top plate angle more than recommended – side plate cutting edge is thin and dulls rapidly**

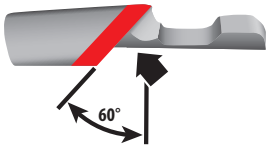


Cause
File held at more than recommended angle

Solution
Refile at correct angle

## Drive Link Wear

**Rounded concave bottom**

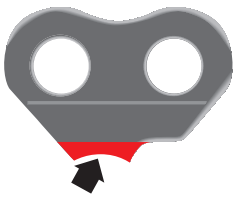

Cause
Shallow grove on bar tip

Solution
Regroove bar tip. Bar may need replacing

Note
Applies to DuraCut™ bars only

**Scars on sides**

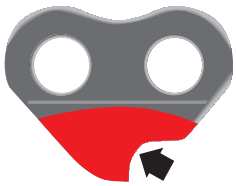

Cause
Loose chain jumping off bar

Solution
Adjust chain tension. Replace bent drive links or replace chain. Refile at correct angle

## Drive Link Wear

### Nicked bottom or back

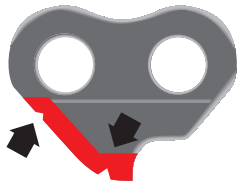

Cause
Cutting with loose chain, or wrong pitch sprocket

Solution
Adjust chain tension. Install correct sprocket. File off burrs. Replace damaged drive links or replace chain

### Front point turned up

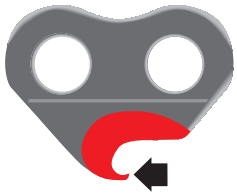

Cause
Drive links bottoming in sprocket. Sprocket worn

Solution
Replace sprocket. Sharpen tangs. Check for burrs

### Battered and broken bottom

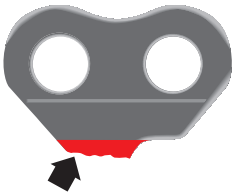

Cause
Chain jumped bar. Spur sprocket hit drive links

Solution
Replace damaged drive links, sharpen tangs with round file or replace chain. Remove burrs

### Front or back peened

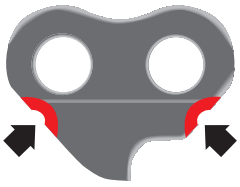

Cause
Wrong pitch sprocket or pro-longed chain chatter

Solution
Replace sprocket. Adjust chain tension. Chain may be damaged beyond repair

### Sides worn round at bottom

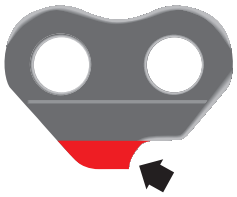

Cause
Chain wobbled in bar groove. Uneven cutters or worn bar rails

Solution
Rework bar rails and groove. Correct chain filing

### Excess wear on bottom of all chain parts

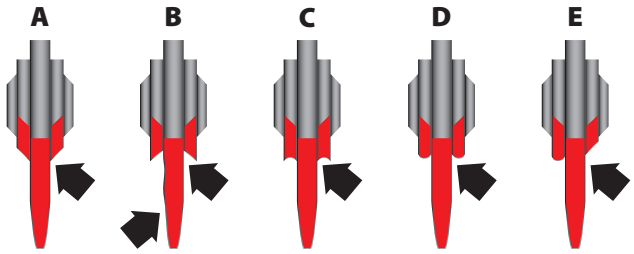


A. Open bar groove B. Severe abrasion and wobbly chain on thin bar rails
C. Rails not flat D. Wobbly chain – rails too thick E. One rail too thin or soft

Cause
Uneven filing, worn bar rails cause chain to wobble

Solution
File chain properly. Recondition bar rails or replace bar. Replace chain if necessary

## Cutter and Tie Strap Wear

### Excessive heel wear on cutters and tie straps

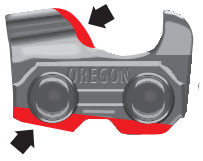

Causes
1. Blunt top plate filing
2. Forcing dull chain to cut
3. Lack of lubrication
4. Low depth gauge settings
5. Forcing chain to cut frozen wood

Solution
File cutters properly. Don't force dull chain to cut. Use oil freely

### Light damage on cutting edges of top and/or side plates

Cause
Excessive pressure on dull or misfiled cutters. Common during winter

Solution
File chain correctly. Use oil freely

## Cutter and Tie Strap Wear



### Edges burred and notch peened on tie straps

Cause
Chain chatter due to loose chain tension and improper filing

Solution
Correct chain tension. Refile chain properly. Replace sprocket if badly worn

### Peened notch in tie strap causing tight joints and broken drive links

Cause
Chain run on badly worn spur sprocket or wrong pitch sprocket

Solution
Replace worn sprocket. Chain may need replacing

### Peening on bottom of cutters and tie strap – causes tight joints

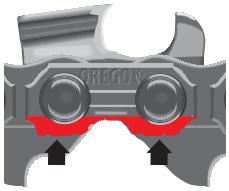

Cause
Loose chain tension. Result of dull cutters and forcing dull chain into wood

Solution
Keep proper tension. Keep cutters sharp. Chain may need replacing

### Cracks under rear rivet holes on cutters and opposing tie straps

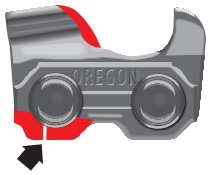

Cause
Excessive pressure on dull or misfiled cutters – common during winter

Solution
File chain correctly. Use oil freely

### Blunt depth gauge causes rough cutting

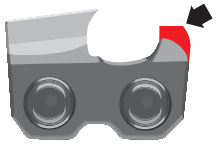

Cause
Uneven filing

Solution
Use correct depth gauge jointer to lower gauges evenly

### Severe damage on either side of top and/or side plates

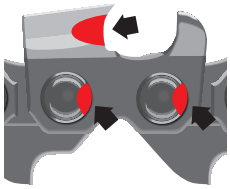

Cause
Cutters hit abrasive materials

Solution
File cutters to remove all damage

### Peening on front corner of cutters and intermediate tie straps – causes tight joints

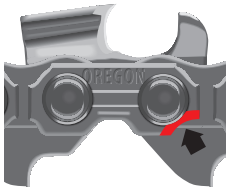

Cause
Chain striking bar entry. Sprocket too small or loose chain tension

Solution
Use proper bar and sprocket. Adjust chain tension correctly

### Excessive wear on bottom of cutters and tie straps

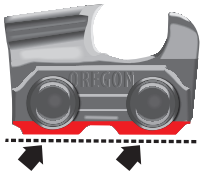

Cause
Depth gauges too high. Cutting edge cannot get into wood

Solution
Lower depth gauges to proper setting. Keep cutters filed correctly

### Concave wear on bottom of cutters – connecting tie straps

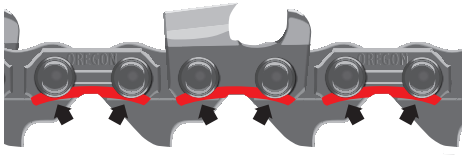

Causes
Chain tension too tight
Normal wear from undercutting (cutting with top of bar)

Solution
Adjust chain tension Reduce cutting with top of bar

### Uneven depth gauge height. Chain won't cut straight.

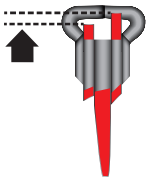

Cause
Improperly filed depth gauge

Solution
Round off front corner to maintain original shape

## Saw Chain Drive Link Counts & Length in Feet

### 1/4"

| Drive Link Count | Length in Feet |
|---|---|
| 40 | 1.67 |
| 41 | 1.71 |
| 42 | 1.76 |
| 43 | 1.80 |
| 44 | 1.84 |
| 45 | 1.88 |
| 46 | 1.92 |
| 47 | 1.96 |
| 48 | 2.01 |
| 49 | 2.05 |
| 50 | 2.09 |
| 51 | 2.13 |
| 52 | 2.17 |
| 53 | 2.22 |
| 54 | 2.26 |
| 55 | 2.30 |
| 56 | 2.34 |
| 57 | 2.38 |
| 58 | 2.42 |
| 59 | 2.47 |
| 60 | 2.51 |
| 61 | 2.55 |
| 62 | 2.59 |
| 63 | 2.63 |
| 64 | 2.68 |
| 65 | 2.72 |
| 66 | 2.76 |
| 67 | 2.80 |
| 68 | 2.84 |
| 69 | 2.88 |
| 70 | 2.93 |
| 71 | 2.97 |
| 72 | 3.01 |
| 73 | 3.05 |
| 74 | 3.09 |
| 75 | 3.14 |
| 76 | 3.18 |
| 77 | 3.22 |
| 78 | 3.26 |
| 79 | 3.30 |
| 80 | 3.34 |
| 81 | 3.39 |
| 82 | 3.43 |
| 83 | 3.47 |
| 84 | 3.51 |

### .325"

| Drive Link Count | Length in Feet |
|---|---|
| 40 | 2.16 |
| 41 | 2.21 |
| 42 | 2.27 |
| 43 | 2.32 |
| 44 | 2.38 |
| 45 | 2.43 |
| 46 | 2.48 |
| 47 | 2.54 |
| 48 | 2.59 |
| 49 | 2.65 |
| 50 | 2.70 |
| 51 | 2.75 |
| 52 | 2.81 |
| 53 | 2.86 |
| 54 | 2.92 |
| 55 | 2.97 |
| 56 | 3.02 |
| 57 | 3.08 |
| 58 | 3.13 |
| 59 | 3.19 |
| 60 | 3.24 |
| 61 | 3.29 |
| 62 | 3.35 |
| 63 | 3.40 |
| 64 | 3.46 |
| 65 | 3.51 |
| 66 | 3.56 |
| 67 | 3.62 |
| 68 | 3.67 |
| 69 | 3.73 |
| 70 | 3.78 |
| 71 | 3.83 |
| 72 | 3.90 |
| 73 | 3.94 |
| 74 | 4.00 |
| 75 | 4.05 |
| 76 | 4.10 |
| 77 | 4.16 |
| 78 | 4.21 |
| 79 | 4.27 |
| 80 | 4.32 |
| 81 | 4.37 |
| 82 | 4.43 |
| 83 | 4.48 |
| 84 | 4.54 |

### 3/8" & 3/8" Low Profile™

| Drive Link Count | Length in Feet | Drive Link Count | Length in Feet |
|---|---|---|---|
| 32 | 1.96 | 82 | 5.01 |
| 33 | 2.02 | 83 | 5.07 |
| 34 | 2.08 | 84 | 5.13 |
| 35 | 2.14 | 85 | 5.19 |
| 36 | 2.20 | 86 | 5.25 |
| 37 | 2.26 | 87 | 5.32 |
| 38 | 2.32 | 88 | 5.38 |
| 39 | 2.38 | 89 | 5.44 |
| 40 | 2.44 | 90 | 5.50 |
| 41 | 2.51 | 91 | 5.56 |
| 42 | 2.57 | 92 | 5.62 |
| 43 | 2.63 | 93 | 5.68 |
| 44 | 2.69 | 94 | 5.74 |
| 45 | 2.75 | 95 | 5.80 |
| 46 | 2.81 | 96 | 5.87 |
| 47 | 2.87 | 97 | 5.93 |
| 48 | 2.93 | 98 | 5.99 |
| 49 | 2.99 | 99 | 6.05 |
| 50 | 3.06 | 100 | 6.11 |
| 51 | 3.12 | 101 | 6.17 |
| 52 | 3.18 | 102 | 6.23 |
| 53 | 3.24 | 103 | 6.29 |
| 54 | 3.30 | 104 | 6.35 |
| 55 | 3.36 | 105 | 6.42 |
| 56 | 3.42 | 106 | 6.48 |
| 57 | 3.48 | 107 | 6.54 |
| 58 | 3.54 | 108 | 6.60 |
| 59 | 3.60 | 109 | 6.66 |
| 60 | 3.67 | 110 | 6.72 |
| 61 | 3.73 | 111 | 6.78 |
| 62 | 3.79 | 112 | 6.84 |
| 63 | 3.85 | 113 | 6.90 |
| 64 | 3.91 | 114 | 6.97 |
| 65 | 3.97 | 115 | 7.03 |
| 66 | 4.03 | 116 | 7.09 |
| 67 | 4.09 | 117 | 7.15 |
| 68 | 4.15 | 118 | 7.21 |
| 69 | 4.22 | 119 | 7.27 |
| 70 | 4.28 | 120 | 7.33 |
| 71 | 4.34 | 121 | 7.39 |
| 72 | 4.40 | 122 | 7.45 |
| 73 | 4.46 | 123 | 7.52 |
| 74 | 4.52 | 124 | 7.58 |
| 75 | 4.58 | 125 | 7.64 |
| 76 | 4.64 | 126 | 7.70 |
| 77 | 4.70 | 127 | 7.76 |
| 78 | 4.77 | 128 | 7.82 |
| 79 | 4.83 | 129 | 7.88 |
| 80 | 4.89 | 130 | 7.94 |
| 81 | 4.95 | | |

### .404"

| Drive Link Count | Length in Feet | Drive Link Count | Length in Feet |
|---|---|---|---|
| 62 | 4.19 | 95 | 6.42 |
| 63 | 4.26 | 96 | 6.49 |
| 64 | 4.33 | 97 | 6.56 |
| 65 | 4.39 | 98 | 6.62 |
| 66 | 4.46 | 99 | 6.69 |
| 67 | 4.53 | 100 | 6.76 |
| 68 | 4.60 | 101 | 6.83 |
| 69 | 4.66 | 102 | 6.90 |
| 70 | 4.73 | 103 | 6.96 |
| 71 | 4.80 | 104 | 7.03 |
| 72 | 4.87 | 105 | 7.10 |
| 73 | 4.93 | 106 | 7.17 |
| 74 | 5.00 | 107 | 7.23 |
| 75 | 5.07 | 108 | 7.30 |
| 76 | 5.14 | 109 | 7.37 |
| 77 | 5.21 | 110 | 7.44 |
| 78 | 5.27 | 111 | 7.50 |
| 79 | 5.34 | 112 | 7.56 |
| 80 | 5.41 | 113 | 7.63 |
| 81 | 5.48 | 114 | 7.70 |
| 82 | 5.54 | 115 | 7.76 |
| 83 | 5.61 | 116 | 7.83 |
| 84 | 5.68 | 117 | 7.90 |
| 85 | 5.75 | 118 | 7.97 |
| 86 | 5.81 | 119 | 8.03 |
| 87 | 5.88 | 120 | 8.10 |
| 88 | 5.95 | 121 | 8.17 |
| 89 | 6.02 | 122 | 8.24 |
| 90 | 6.08 | 123 | 8.30 |
| 91 | 6.15 | 124 | 8.37 |
| 92 | 6.22 | 125 | 8.44 |
| 93 | 6.29 | 126 | 8.51 |
| 94 | 6.35 | 127 | 8.57 |

| Chain Pitch | Drive Link Count per Reel | | |
|---|---|---|---|
| | Per 100' Reel | Per 25' Reel | Per 50' Reel |
| 1/4" | 2,392 | 600 | N/A |
| .325" | 1,848 | 464 | N/A |
| 3/8" | 1,640 | 412 | N/A |
| .404" | 1,484 | 372 | N/A |
| 3/4" | N/A | N/A | 384 |

# GUIDE BARS

User Types . . . . . FOR 150–151
Choose the Right Guide Bar . . . . . FOR 152
Guide Bar Part Numbering System . . . FOR 153
SpeedCut™, VersaCut™, and
ControlCut™ Guide Bars . . . FOR 154–157
PowerCut™ Guide Bars . . . . . FOR 158–159
DuraCut™ Guide Bars . . . . . FOR 160–161
AdvanceCut™ Guide Bars . . . . . FOR 162–163
Single Rivet Guide Bars . . . . . FOR 164–165
Sculptor™ Guide Bars . . . . . .FOR 166
RSN Replacement Noses . . . . . .FOR 167
Pro-Lite® Guide Bars & Parts . . . . FOR 168–170
Guide Bar Tail Mounts . . . . . FOR 171–177
Guide Bar Troubleshooting . . . . . FOR 178–179

## Professional

Loggers, arborists, orchardists, millwrights, forestry workers, and other highly skilled woodcutters require guide bars designed for the demands of their tough professions. Oregon® makes guide bars that are strong, durable, and reliable, and our state-of-the-art LubriTec oiling system promotes a long lifespan.

**NEW**
SpeedCut, VersaCut, & ControlCut

**OLD**
Pro-Lite®

### SpeedCut™
For professionals who cut high volumes of wood. Narrow kerf. Durable and efficient. The lighter weight helps reduce operator fatigue.

### VersaCut™
For professionals (like arborists) who cut with a variety of applications. Versatile and durable. The lighter weight helps reduce operator fatigue.

### ControlCut™
for users who require smooth and controlled cuts. Smaller radius nose reduces kickback. The lighter weight helps reduce operator fatigue.

**NEW**
PowerCut

**OLD**
Power Match®

### PowerCut™
For loggers and other users who require a tough, heavy-use tool. The chrome-moly body helps reduce wear and promotes a longer lifespan.

**NEW**
DuraCut

**OLD**
Armor Tip

### DuraCut™
Made for challenging cutting environments. Stellite nose and chrome-moly body promotes ultra high-wear resistance.

## Occasional User

Homeowners and other occasional users prize simplicity and reliability for yard work. You need a tool that can cut a stubborn tree or make that Saturday set aside for yardwork pleasant and satisfying. Oregon® guide bars like the Advance-Cut and Single Rivet were designed with occasional users in mind.

Oregon guide bars are safe, simple to use, light-weight, and provide added value by saving you money.

**NEW**
AdvanceCut

**OLD**
Pro-Am®

### AdvanceCut™

For experienced homeowners, as well as farmers and firewood cutters. Multi-rivet nose, light-weight, and maneuverable.

**NEW**

**OLD**
Double Guard®

### Single Rivet

For homeowners who only have an occasional need to use a chainsaw. The single-rivet, smaller-radius noses helps reduce kickback.

# Guide Bars

## Choose the Right Guide Bar for Your Saw

For safety and performance, it's essential that you choose the right guide bar. From electric and small gas to the largest professional powerheads, Oregon has the bar you need - beginning with 8" up to 42". Oregon offers you the broadest selection of guide bars in the industry. Use the chart below to help you choose the right guide bar for your saw.

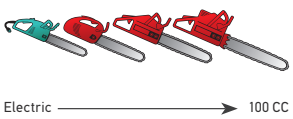


| | | 4 | 0 | | | | | 8 | | | 3 | | | | |
|---|---|---|---|---|---|---|---|---|---|---|---|---|---|---|---|
| | | .043" | .050" | | | | | .058" | | | .063" | | | | |
| | | 3/8" | 1/4" | 3/8" | .325" | | 3/8" | .325" | 3/8" | .404" | .325" | 3/8" | .404" | | |
| GOOD | Single Rivet | 90 | 25 | 91 | | | | | | | | | | | |
| BETTER | AdvanceCut™ | | | 91 | 95 | 20 | 72 | 21 | 73 | | 22 | 75 | | | |
| BEST | Light-Weight Professional Guide Bars<br>SpeedCut™<br>ControlCut™<br>VersaCut™ | | | | 95 | 20 | 72 | 21 | 73 | | 22 | 75 | | | |
| BEST | PowerCut™ | | | | | 20 | 72 | 21 | 73 | 58 | 22 | 75 | 59 | 27 | 68 |
| BEST | DuraCut™ | | | | | | 72 | | 73 | 58 | | 75 | 59 | 27 | 68 |

= Narrow kerf

## How the Oregon® Guide Bar Part Numbering System Works

Oregon guide bar part numbers are printed on the bar package and etched on the bar body. Here's what each digit means:

**18 0 RN D K095**

### Length (in.)

8
10
11
12
13
14
15
16
**18**
20
21
22
24
25
26
27
28
30
32
33
34
36
37
42

### Gauge (in.)

4 = .043"
**0** = .050"
8 = .058"
3 = .063"

### Professional Guide Bar Codes

**SpeedCut™**

TXL = SpeedCut
*MP* = Narrow kerf sprocket-nose (Pro-Lite®)
*MG* = Narrow kerf sprocket-nose with Guard Mate holes (Pro-Lite®)

**VersaCut™**

VXL = VersaCut
SLH = Sprocket-nose (Pro-Lite®)
*SLG* = Sprocket-nose (Pro-Lite®)
*SP* = Sprocket-nose (Pro-Lite®)
*GP* = Sprocket-nose with Guard Mate holes (Pro-Lite®)
*GL* = Sprocket-nose with Guard Mate holes (Pro-Lite®)

**ControlCut™**

PXL = ControlCut
*SLB* = Sprocket-nose (Pro-Lite®)

**PowerCut™** formerly Power Match®

**RN** = Replaceable sprocket-nose
PM = Replaceable sprocket-nose
RW = Replaceable sprocket-nose

**DuraCut™** formerly Armor Tip

AT = Solid nose, laser welded tip with wear-resistant alloy

### Occasional User Bar Codes

**AdvanceCut™** formerly Pro-Am®

SX = Sprocket-nose
PX = Sprocket-nose
GD = Sprocket-nose with Guard Mate holes
ML = Narrow kerf sprocket-nose
SF = Sprocket-nose

Single Rivet formerly Double Guard®

SD = Sprocket-nose
DG = Sprocket-nose with Guard Mate holes
ML = Narrow kerf sprocket-nose

### Sprocket Nose Codes

| Pitch | Tooth Count |
|---|---|
| A = 1/4" | 10 |
| B = .325" | 10 or 12 |
| **D** = 3/8" | 9 or 11 |
| E = 3/8" | 7 or 9 |
| F = .404" | 10 |
| G = .325" | 12 |
| H = 3/8" | 11 |

### Solid Nose Code

M Medium (1.33")

### Bar Mounts

A041
A061
A074
A089
A095
A218
A318
D009
D024
D025
D033
D096
D176
D196
E031
K041
**K095**
K216
Z095

**Intenz®**
T041
T095
T218
T318

**Comments:**

- In a few cases, where two bars would have the same length in their part numbers but different drive link counts, the letter Z will be used in the bar mount description to distinguish between them (K095 and Z095 for example).
- Chainsaws originally equipped with an Intenz® bar, and saws adapted to take an Intenz® bar, do not have a "bar adjustment pin" for tensioning the chain. Use ONLY an Intenz bar when replacing the guide bar on these saws. See page FOR for important information on Intenz bars.
- PowerCut solid body bars may be stamped with XXX, ZZZ or other letters as they can have different noses installed on the body, thereby changing the part number.
- Guard Mate holes are built into the noses of certain types of Oregon bars and allow the attachment of a Guard Mate tip guard to help reduce the risk of kickback.
- Oregon Sculptor™ carving bar part numbers do not follow the Oregon bar part numbering system.
- Bar types and part numbers printed in *red italics* have been obsoleted. Contact your authorized Oregon distributor for availability.

# Guide Bars – Light-Weight Professional

## SpeedCut™, VersaCut™, ControlCut™



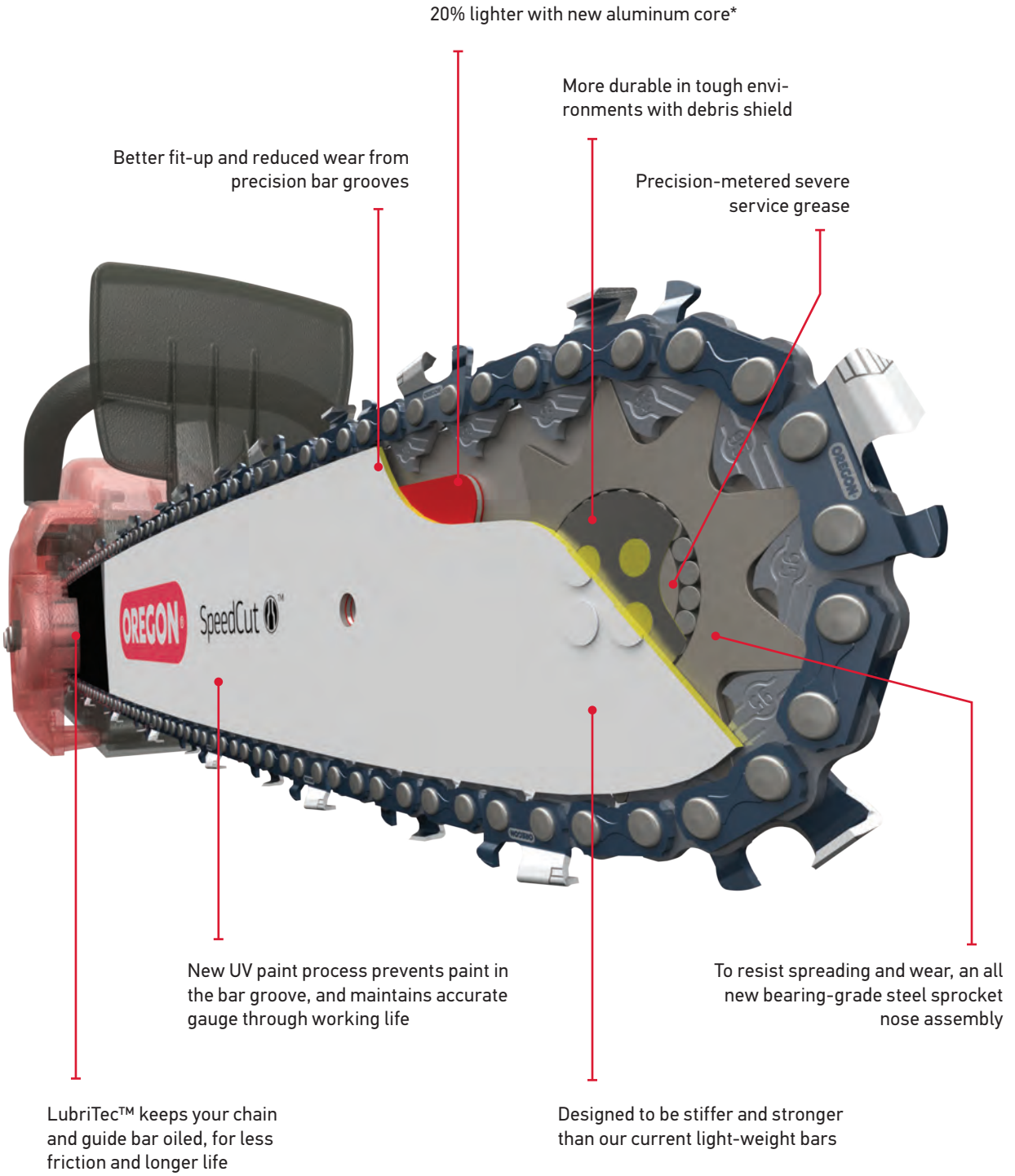


*Compared to an Oregon Pro-Lite bar

## SpeedCut™, VersaCut™, ControlCut™

**16 0 TXL B K095**

Lengths (in)

13
15
**16**
18
20

SpeedCut Guide Bar Code

**TXL** = SpeedCut, Narrow Kerf, Sprocket-Nose

Nose Alpha Code & Sprocket Tooth Counts

| **B** | G |
|---|---|
| 10 | 12 |

Chain Type by Pitch

| Gauge | .325" |
|---|---|
| **0** = .050" | **95TXL** |

Tail Mounts

A074
D025
**K095**

**18 0 VXL G K095**

Lengths (in)

13
15
16
**18**
20
24

VersaCut & ConrolCut Guide Bar Codes

**VXL** = VersaCut, Sprocket-Nose
PXL = ControlCut, Sprocket-Nose

Nose Alpha Code & Sprocket Tooth Counts

| B | **G** | H |
|---|---|---|
| 10 | 12 | 11 |

Chain Types by Pitch

| Gauges | .325" | 3/8" |
|---|---|---|
| **0** = .050" | **20** | 72 |
| 8 = .058" | 21 | 73 |
| 3 = .063" | 22 | 75 |

Tail Mounts

A041
A074
D009
D024
D025
D176
K041
**K095**
K216

These completely re-designed light-weight professional guide bars are lighter, stronger and longer lasting. Designed for top performance for professional woodcutters.

**SpeedCut** Perfect for professionals who cut high volumes of wood. The **narrow kerf system** requires less power so your cuts are much faster. SpeedCut lives up to its name because of its lighter weight, durability, and best-in-class efficiency.

**VersaCut** Ideal solution for arborists, orchardists, and other professionals who encounter every type of tree, shrub, or limb during their work day. VersaCut has the versatility and durability for your ever-changing environment.

**ControlCut** Made for the work days when you encounter a dozen small jobs and a few larger ones. ControlCut gives you the freedom to use one tool, rather than two or three. The guide bar's smaller-radius nose reduces kickback for smooth cutting.

= Narrow kerf

### Features and Benefits

- More precise cutting from a stiffer bar
- Provides better balance on smaller saws
- Lighter weight means less fatigue
- Longer life from a hardier rail
- Longer nose life and better performance with a new sprocket nose system
- Reduced rail wear rate and more precise cutting via better chain fit-up
- LubriTec™ keeps your chain and guide bar oiled, for less friction and longer life

**Recommended Saw Sizes** – Up to 2.3 – 4.0 cu. in (38 – 65 cc)

# Guide Bars – Light-Weight Professional

## SpeedCut™ – Part Numbers



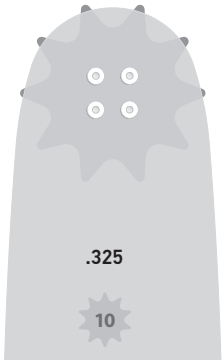


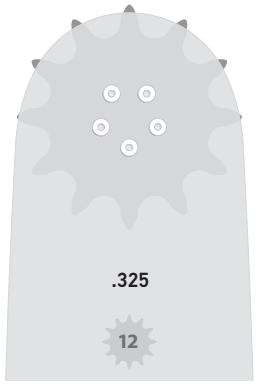


### TXLB
SpeedCut

**A074**
- 160TXLBA074
- 180TXLBA074

**D025**
- 130TXLBD025

**K041**
- 160TXLBK041
- 180TXLBK041

**K095**
- 130TXLBK095
- 150TXLBK095
- 160TXLBK095
- 180TXLBK095
- 200TXLBK095

**K216**
- 140TXLBK216
- 160TXLBK216
- 180TXLBK216

### TXLG
SpeedCut

**D025**
- 150TXLGD025
- 160TXLGD025
- 180TXLGD025
- 200TXLGD025

**K041**
- 160TXLGK041
- 180TXLGK041

**K095**
- 150TXLGK095
- 160TXLGK095
- 180TXLGK095
- 200TXLGK095

**K216**
- 160TXLGK216
- 180TXLGK216
- 200TXLGK216

**SpeedCut** guide bars pair with SpeedCut chain to create the next-generation **narrow kerf system** on saws up to 55 cc displacement. SpeedCut is designed to deliver faster cutting and reduced weight compared to standard cutting systems.

## ControlCut™ & VersaCut™ – Part Numbers



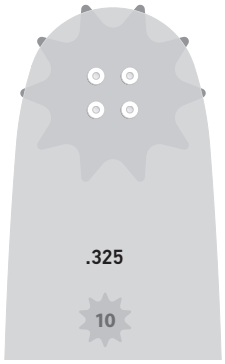


### PXLB
ControlCut

**A074**
- 160PXLBA074
- 163PXLBA074
- 180PXLBA074
- 183PXLBA074

**D025**
- 133PXLBD025
- 138PXLBD025

**K041**
- 138PXLBK041
- 158PXLBK041

**K095**
- 138PXLBK095
- 158PXLBK095
- 168PXLBK095
- 188PXLBK095

**ControlCut** guide bars are standard-kerf bars that feature a small radius nose for reduced kickback.

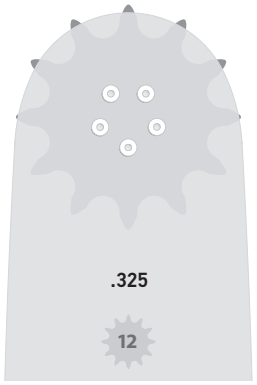


### VXLG
VersaCut

**D025**
- 153VXLGD025
- 160VXLGD025
- 163VXLGD025
- 180VXLGD025
- 183VXLGD025
- 203VXLGD025

**K041**
- 150VXLGK041
- 158VXLGK041
- 160VXLGK041
- 168VXLGK041
- 180VXLGK041
- 188VXLGK041
- 200VXLGK041
- 208VXLGK041

**K095**
- 150VXLGK095
- 158VXLGK095
- 160VXLGK095
- 168VXLGK095
- 180VXLGK095
- 188VXLGK095
- 200VXLGK095
- 208VXLGK095

**K216**
- 160VXLGK216
- 180VXLGK216
- 200VXLGK216

**D009**
- 180VXLGD009
- 200VXLGD009
- 240VXLGD009

**VersaCut** guide bars are standard-kerf bars that feature a large radius nose and are designed to perform in a wide range of professional applications.

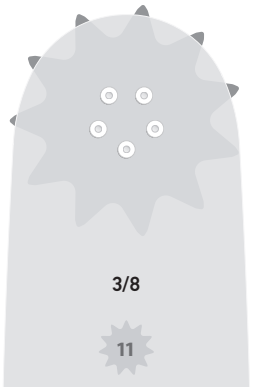


### VXLH
VersaCut

**D009**
- 158VXLHD009
- 160VXLHD009
- 168VXLHD009
- 178VXLHD009
- 180VXLHD009
- 188VXLHD009
- 200VXLHD009
- 208VXLHD009
- 240VXLHD009
- 248VXLHD009

**D024**
- 168VXLHD024
- 188VXLHD024
- 208VXLHD024

**D025**
- 153VXLHD025
- 160VXLHD025
- 163VXLHD025
- 180VXLHD025
- 183VXLHD025
- 200VXLHD025
- 203VXLHD025
- 240VXLHD025
- 243VXLHD025

**D176**
- 160VXLHD176
- 168VXLHD176
- 180VXLHD176
- 188VXLHD176
- 200VXLHD176
- 208VXLHD176

**K095 / Z095**
- 150VXLHK095
- 158VXLHK095
- 160VXLHK095
- 168VXLHK095
- 180VXLHK095
- 188VXLHK095
- 188VXLHZ095
- 200VXLHK095
- 208VXLHK095

# Guide Bars – Professional

## PowerCut™ (formerly Power Match®)

**18 0 RN D K095**

**Lengths (in)**

13, 15
16, 17
**18**, 20
21, 22
24, 25
26, 28
30, 32
33, 34
36, 37
42

**PowerCut Guide Bar Codes**

**RN** = Replaceable Sprocket-Nose
PM = Replaceable Sprocket-Nose, Pro Finish
RW = Replaceable Sprocket-Nose, Reduced Weight
*GN* = Replaceable Sprocket-Nose, Guard Mate®

**Nose Alpha Code & Sprocket Tooth Counts**

| B | **D** | F |
|---|---|---|
| 12 | 11 | 10 |

**Chain Types by Pitch**

| Gauges | .325" | 3/8" | .404" |
|---|---|---|---|
| **0** = .050" | 20 | **72** | |
| 8 = .058" | 21 | 73 | 58 |
| 3 = .063" | 22 | 75 | 27, 59, 68 |

**Tail Mounts**

D009
D024
D025
D033
D176
D196
E031
K041
**K095**
Z095

For loggers and other tree-cutting professionals that need heavy-use guide bars. PowerCut's chrome-moly steel body is tough and powerful, enabling you to cut through timber precisely and efficiently. The replaceable sprocket nose reduces the need for new guide bars, giving the PowerCut bar a longer life and greater durability.

### Features and Benefits

- Replaceable bar nose, eliminates need to purchase a new bar
- Nose fastens with a single rivet, and is secured by wide, strong, overlapping ears
- Long nose takes most of the abuse. Less wear to the body.
- Much stronger bar with super tough chrome-moly steel. And tough rails with excellent resistance to wearing and chipping.
- LubriTec™ keeps your chain and guide bar oiled, for less friction and longer life

**Recommended Saw Sizes** – 3.5 cu. in (58 cc) and larger

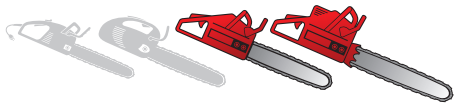

**Comments**
PowerCut solid body bars may be stamped with XXX, ZZZ or other letters as they can have different noses installed on the body.

### PM Pro Finish

- Squared, polished rails minimize chain leaning.

### RW Reduced Weight

- 26% lighter than a standard bar at 32" length
- Aluminum core
- Precision milling from a solid bar core, without sacrificing durability

## PowerCut™ – Part Numbers

### RNB

#### D025

163RNBD025
183RNBD025

#### K041

160RNBK041
180RNBK041

#### K095

158RNBK095
160RNBK095
168RNBK095
188RNBK095
200RNBK095
208RNBK095

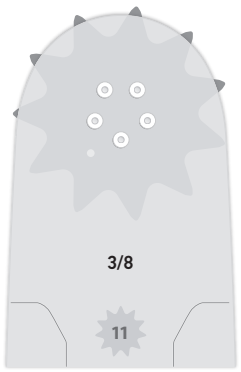


### RND • RWD • PMD

#### D009

138RNDD009
160RNDD009
168RNDD009
178RNDD009
180RNDD009
188RNDD009
200RNDD009
203RNDD009
208RNDD009
228RNDD009
240RNDD009
243RNDD009
248RNDD009
268RNDD009
280RNDD009
*280RWDD009* RW
283RNDD009
*283RWDD009* RW
288RNDD009
300RNDD009
308RNDD009
320RNDD009
*320RWDD009* RW
323RNDD009
*323RWDD009* RW
328RNDD009
*338PMDD009* PM
343RNDD009
363RNDD009
*363RWDD009* RW
368RNDD009
*378PMDD009* PM
*378RWDD009* RW
423RNDD009
208RNDD024

#### D025

160RNDD025
163RNDD025
180RNDD025
183RNDD025
200RNDD025
203RNDD025
223RNDD025
240RNDD025
243RNDD025
280RNDD025
*280RWDD025* RW
283RNDD025
*283RWDD025* RW
300RNDD025
303RNDD025
320RNDD025
*320RWDD025* RW
323RNDD025
*323PMDD025* PM
343RNDD025
*343RWDD025* RW
363RNDD025
*363PMDD025* PM
*363RWDD025* RW
423RNDD025

#### D033

208RNDD033

#### D176

160RNDD176
180RNDD176
200RNDD176
240RNDD176
280RNDD176

#### D196

160RNDD196
200RNDD196
240RNDD196

#### K095

160RNDK095
168RNDK095
180RNDK095
188RNDK095
188RNDZ095
200RNDK095
208RNDK095
240RNDK095
248RNDK095
280RNDK095

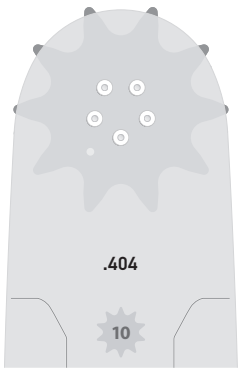


### RNF • PMF

#### D009

363RNFD009
423RNFD009

#### D025

323RNFD025

#### E031

213RNFE031
253RNFE031

# Guide Bars – Professional

## DuraCut™ (formerly Armor Tip)

**20 0 AT M K095**

**Length (in)**

16
18
**20**
24

**DuraCut Guide Bar Code**

**AT** = Solid Nose, Laser Welded Tip with Wear-Resistant Alloy

**Solid Nose Alpha Code**

**M** = Medium (1.33")

**Tail Mounts**

D009
D025
D176
**K095**
Z095

**Chain Types by Pitch**

| Gauge | .325" | 3/8" | .404" |
|---|---|---|---|
| **0** = .050" | **20** | **72** | |
| 8 = .058" | 21 | 73 | 58 |
| 3 = .063" | 22 | 75 | 27, 59, 68 |

Created for all challenging and abrasive environments, including fire-damaged forests, deserts, or sandy environments, and areas where the wood is unstable and requires extra care. DuraCut has an ultra high-wear resistant stellite nose and chrome-moly steel body to give you a longer-lasting tool for the most punishing environments.

## Features and Benefits

- Longer life, ultra high-wear resistant stellite alloy
- Much stronger bar due to super tough, chrome-moly steel, and tough rails with excellent resistance to wear and chipping.
- LubriTec™ keeps your chain and guide bar oiled, for less friction and longer life

**Recommended Saw Sizes** – 2.3 cu. in (38 cc) and larger

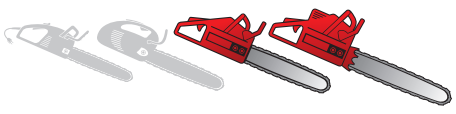

## DuraCut™ – Part Numbers

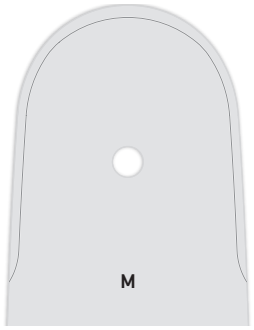




### ATM

| D009 |
|---|
| 160ATMD009 |
| 168ATMD009 |
| 188ATMD009 |
| 200ATMD009 |
| 203ATMD009 |
| 208ATMD009 |
| 240ATMD009 |
| 288ATMD009 |
| 248ATMD009 |

| D025 |
|---|
| 160ATMD025 |
| 163ATMD025 |
| 180ATMD025 |
| 183ATMD025 |
| 200ATMD025 |
| 203ATMD025 |
| 240ATMD025 |
| 243ATMD025 |

| D176 |
|---|
| 200ATMD176 |
| 240ATMD176 |

| K095 / Z095 |
|---|
| 160ATMK095 |
| 168ATMK095 |
| 180ATMK095 |
| 180ATMZ095 |
| 188ATMK095 |
| 200ATMK095 |
| 200ATMZ095 |
| 208ATMK095 |
| 160ATMK095 |
| 168ATMK095 |
| 180ATMK095 |
| 188ATMK095 |
| 200ATMK095 |
| 200ATMZ095 |
| 208ATMK095 |

# Guide Bars – Occasional User

## AdvanceCut™ (formerly Pro-Am®)

**15 0 ML B K095**

**Lengths (in)**

12
13
14
**15**
16
18
20
24

**AdvanceCut Guide Bar Codes**

SX = Sprocket-Nose
PS = Sprocket-Nose
GD = Sprocket-Nose with Guard Mate® Holes
**ML** = Narrow Kerf Sprocket-Nose
SF = Sprocket-Nose

**Nose Alpha Code & Sprocket Tooth Counts**

| E | **B** | G | D | H |
|---|---|---|---|---|
| 9 | 10 | 12 | 9 | 11 |

**Chain Types by Pitch**

| Gauges | 3/8 LP | .325" | 3/8" |
|---|---|---|---|
| **0** = .050" | 91 | **20, 95** | 72 |
| 8 = .058" | | 21 | 73 |
| 3 = .063" | | 22 | 75 |

**Tail Mounts**

A041
A074
A095
A318
D009
D025
D096
D176
K041
**K095**

Intenz
T041

Exceptional tool for homeowners who regularly cut trees on their properties or yards, as well as farmers and firewood cutters. AdvanceCut is for experienced users who need power and reliability in challenging yard conditions. The multi-rivet nose gives you durability, and AdvanceCut's maneuverability and light-weight help you get the job done quickly.

### Features and Benefits

- Slim symmetrical contour is light-weight, easy to maneuver, and is reversible for longer life
- Available in models with the Intenz tensioning mechanism built into the bar itself
- Multi-rivet nose for long-lasting durability
- LubriTec™ keeps your chain and guide bar oiled, for less friction and longer life

**Recommended Saw Sizes** – Up to 3.5 cu. in (57 cc)

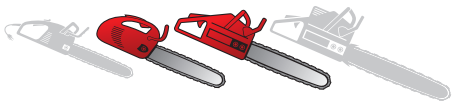

### Narrow Kerf

- Thickness of side laminates is reduced to obtain all the advantages of narrow kerf cutting when used in combination with all narrow kerf .325" 95-series chain

## AdvanceCut™ – Part Numbers

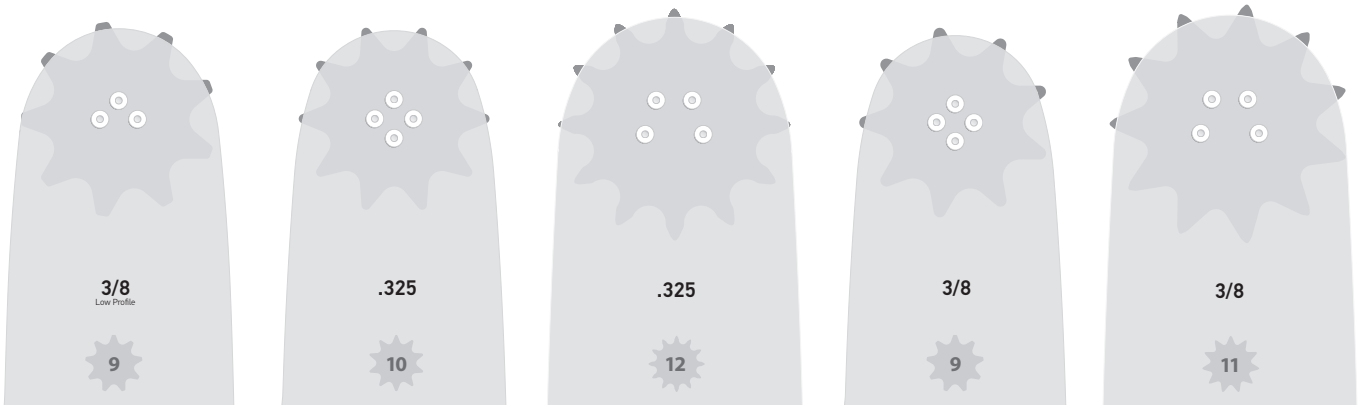




### SXE

**A041**
- 100SXEA041
- 120SXEA041
- 140SXEA041
- 160SXEA041

**A074**
- 120SXEA074
- 140SXEA074
- 160SXEA074

**A095**
- 120SXEA095
- 140SXEA095
- 160SXEA095

**A318**
- 140SXEA318
- 160SXEA318

### PXB • MLB • GDB

**A074**
- 163PXBA074
- 183PXBA074

**K041**
- 130MLBK041
- 160GDBK041
- 180GDBK041
- 180GDBK041
- 200GDBK041
- 150MLBK041
- 180MLBK041
- 160MLBK041
- 160PXBK041
- 180PXBK041
- 180PXBT041
- 200PXBK041
- 200PXBT041
- 208PXBZ095 NEW

**K095**
- 130MLBK095
- 150MLBK095
- 160MLBK095
- 180MLBK095
- 158PXBK095
- 168PXBK095
- 180PXBK095
- 188PXBK095
- 200PXBK095
- 208PXBK095
- 208PXBZ095

### SFG

**D025**
- 163SFGD025
- 183SFGD025
- 203SFGD025

**K041**
- 168SFGK041
- 188SFGK041

**K095**
- 168SFGK095
- 188SFGK095
- 208SFGK095

### PXD • GDD

**D096**
- 160GDDD096
- 200GDDD096

**D176**
- 160PXDD176
- 180PXDD176
- 200PXDD176

**K041**
- 200PXDK041

**K095**
- 160PXDK095

### SFH • GDH

**D009**
- 168SFHD009
- 188SFHD009
- 200SFHD009
- 208SFHD009
- 240SFHD009
- 248SFHD009

**D025**
- 160SFHD025
- 163SFHD025
- 183SFHD025
- 200SFHD025
- 203SFHD025
- 240SFHD025
- 243SFHD025

**D176**
- *160SFHD176*

**K095**
- 160SFHK095
- 168SFHK095
- 180SFHK095
- 188SFHK095
- 200SFHK095
- 208SFHK095

Narrow Kerf

Intenz®

Guard Mate® compatible

**Guard Mate® holes are built into the noses of certain types of Oregon guide bars and allow the attachment of a Guard Mate tip guard to help reduce the risk of kickback.**

Part numbers printed in *red italics* have been obsoleted. Contact your authorized Oregon distributor for availability.

# Guide Bars – Occasional User

## Single Rivet (formerly Double Guard®)

**16 0 SD E A041**

**Lengths (in)**

8
10
12
14
**16**
18

**Gauges**

4 = .043"
**0** = .050"

**Single Rivet Guide Bar Codes**

**SD** = Sprocket-nose
DG = Sprocket-Nose with Guard Mate® Holes
ML = Narrow Kerf Sprocket-Nose

**Nose Alpha Code & Sprocket Tooth Counts**

| A | **E** |
|---|---|
| 10 | 7 |

**Chain Types by Pitch**

| 1/4" | 3/8 LP |
|---|---|
| | 90 |
| 25 | **91** |

**Tail Mounts**

**A041**
A061
A074
A095
A218
A318
Z041
Z095

Intenz®
T041
T218

For homeowners who only have an occasional need to use a chainsaw. You value quality and reliability, and you're willing to do the tougher yardwork yourself. Single rivet guide bars are safe and maneuverable, with less kickback. They make working on your property quick and easy.

### Features and Benefits

- Slim symmetrical contour is light-weight, easy to maneuver, and is reversible for longer life
- Small-radius nose helps reduce kickback.
- Models are available with the Intenz tensioning mechanism built into the bar itself
- Bar mount holes to mount the PowerSharp® bar mount sharpener are available on some models

**Recommended Saw Sizes** – Electric or gas up to 2.5 cu. in (41 cc)

## Single Rivet – Part Numbers

### SDA

**A041**

120SDAA041

140SDAA041

**A108**

080SDAA108

100SDAA108

### MLE

**A041**

084MLEA041

124MLEA041

144MLEA041

164MLEA041

**A074**

124MLEA074

144MLEA074

164MLEA074

**A218**

104MLEA218

124MLEA218

### SDE • DGE

**A041**

080SDEA041

100SDEA041

120DGEA041

120DGET041

120SDEA041 • •

140DGEA041

140DGET041

140SDEA041 • •

140SDET041

160DGEA041 • •

160DGET041

160SDEA041 • •

160SDET041 • •

180DGEA041

180SDEA041 • •

180SDET041 • •

**A061**

120DGEA061

140DGEA061

160DGEA061

**A074**

120SDEA074

140SDEA074

160SDEA074

**A095**

120SDEA095

140SDEA095

160SDEA095

160SDEZ095

180SDEA095

**A108**

100SDEA108

**A218**

100SDEA218

104MLEA318

120SDEA218

120SDET218

**A318**

120SDEA318

140SDEA318

160SDEA318

• • PowerSharp® Compatible

Intenz®

Guard Mate® compatible

**Guard Mate® holes are built into the noses of certain types of Oregon guide bars and allow the attachment of a Guard Mate tip guard to help reduce the risk of kickback.**

# Guide Bars – Carving

## Sculptor™

3

| Lengths (in) | | Solid Nose & Saw Chain | | Tail Mounts |
|---|---|---|---|---|
| 10<br>12<br>14 | | Dime Tip (10 mm)<br>Quarter Tip (12 mm) | | Multi-Mount: (A041, A074, A095) |
| | | Chain Types | | |
| | Gauges | 1/4" | 3/8 LP | |
| | **0** = .050" | 25A (25F) | 91VXL | |

An essential tool for chainsaw artists seeking long-lasting performance and versatility.

## Features and Benefits

- Manufactured with high-quality steel
- Precision gas-welded high cobalt/chrome alloy hard-facing material for better nose performance and life
- Clear-coated, brushed steel for distinctive and durable appearance and finish

**Recommended Saw Sizes** – Up to 2.3 – 4.0 cu. in (38 – 65 cc)

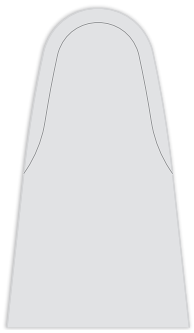

Dime Tip

| | Part No. | Bar Length | Drive Link Counts 25A (25F) |
|---|---|---|---|
| 041 / 095 | 535044 | 10" (25 cm) | 60 |
| | 535045 | 12" (30 cm) | 68 |
| | 535046 | 14" (35 cm) | 76 |
| 074 | 535044 | 10" (25 cm) | 60 |
| | 535045 | 12" (30 cm) | 68 |
| | 535046 | 14" (35 cm) | 75 |

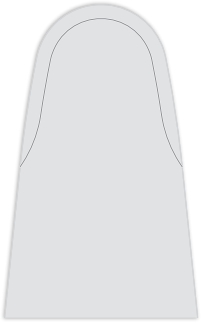

Quarter Tip

| | Part No. | Bar Length | Drive Link Counts 25A (25F) | 91VXL |
|---|---|---|---|---|
| 041 / 095 | 535047 | 12" (30 cm) | 68 | 47 |
| | 535048 | 14" (35 cm) | 76 | 52 |
| 074 | 535047 | 12" (30 cm) | 68 | 47 |
| | 535048 | 14" (35 cm) | 75 | 51 |

## PowerCut™ RSN Kits

Long nose takes most of the abuse and minimizes wear on the bar body on PowerCut (Power Match®) bars. A single nose for .050", .058", and .063" gauges. Attachment rivet included. (Nose radius 1.115"). Standard RSN kits fit "RN" bars.

| OREGON | Description | Pitch – Tooth Count |
|---|---|---|
| 34775 | Standard RSN Kit | .325" – 12 |
| 30853 | Standard RSN Kit | 3/8" – 11 |
| 30855 | Standard RSN Kit | .404" – 10 |
| *523437* | Replacement nose attachment rivets 25-pack | |

Part numbers printed in *red italics* have been obsoleted.
Contact your authorized Oregon distributor for availability.

## PowerCut Pro RSN kits

Made for Pro and reduced-weight PowerCut bars with the features that professional cutters want. Long nose takes most of the abuse and minimizes wear on the bar body. A single nose for .050", .058", and .063" gauges. Attachment rivet included. (Nose radius 1.115"). Pro RSN kits fit "PM" and "RW" bars.

| OREGON | Description | Pitch – Tooth Count |
|---|---|---|
| *543554* | Pro RSN Kit PM RW | .325" – 12 |
| *39520* | Pro RSN Kit PM RW | 3/8" – 11 |
| *39715* | Pro RSN Kit PM RW | .404" – 10 |
| *523437* | Replacement nose attachment rivets 25-pack | |

## Guard Mate Bar-Nose Tip Guards

A proven product that reduces the risk of bar-nose kickback. Only for use on bars with Guard Mate holes.

33812

33810

| OREGON | Description |
|---|---|
| 33812 | Guard Mate Kit – Fits single rivet (Double Guard), 91 & 25 (DG) |
| 33810 | Guard Mate Kit – Fits PowerCut (GN), Pro-Lite® (GL, GP, MG) and AdvanceCut™ (GD). |

# Guide Bars – Discontinued

## Pro-Lite® ( still available while supplies last )

**18 0 SL G K095**

**Lengths (in)**

12
13
14
15
16
**18**
20

**Pro-Lite Guide Bar Codes**

*SP* = Sprocket-Nose
*GP* = Sprocket-Nose with Guard Mate® Holes
***SL*** = Sprocket-Nose
*GL* = Sprocket-Nose with Guard Mate Holes
*MP* = Narrow Kerf Sprocket-Nose
*MG* = Narrow Kerf Sprocket-Nose, Guard Mate®

**Nose Alpha Code & Sprocket Tooth Counts**

| E | B | **G** | D | H |
|---|---|---|---|---|
| 9 | 10 | 12 | 9 | 11 |

**Chain Types by Pitch**

| Gauges | 3/8 LP | .325" | 3/8" |
|---|---|---|---|
| **0** = .050" | 91 | **20, 95** | 72 |
| 8 = .058" | | 21 | 73 |
| 3 = .063" | | 22 | 75 |

**Tail Mounts**

A041
A064
A074
A095
A318
D009
D024
D025
D176
D196
K041
**K095**
K216

Intenz®
T041

Sprocket-nose laminated guide bars. Designed for full-time woodcutters who need the best combination of value and professional durability. For cutting clean wood with small to medium-size saws.

## Pro-Lite Features and Benefits

- Slim contour, easy to maneuver
- Impressive bar-body strength. Excellent resistance to wear and chipping. Super-tough chrome-moly steel.
- Replaceable nose sprocket kit (except SP and GP bars)

**Recommended Saw Sizes** – Up to 2.3 – 4.0 cu. in (38 – 65 cc)

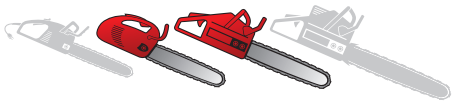

## MP & MG

- Thickness of side laminates is reduced to obtain all the advantages of narrow kerf cutting when used in combination with narrow kerf .325" 95VPX and 95TXL chain

## Pro-Lite® – Part Numbers ( still available while supplies last )

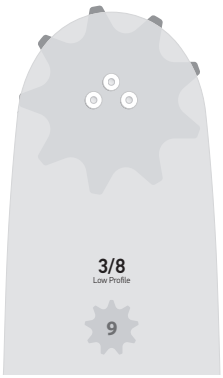


### SPE • GPE

A041 / T041

*120SPEA041*
*120GPEA041*
*140SPET041*

*160GPEA041*
*160GPET041*
*160SPET041*

A074

*120SPEA074*
*140SPEA074*

A095

*120SPEA095*
*140SPEA095*
*160SPEA095*

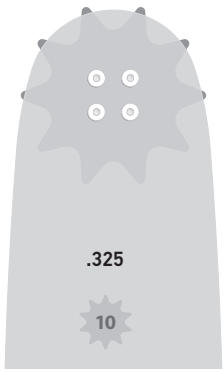


### SLB • MPB

A074

*163SLBA074*
*183SLBA074*

K095

*130MPBK095*
*138SLBK095*
*160MPBK095*
*168SLBK095*

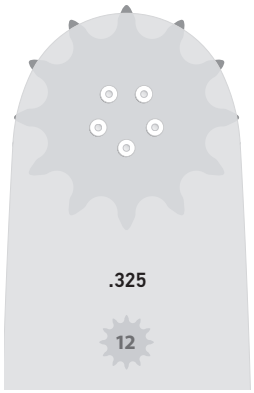


### SLG • GLG • MGG • MPG

D025

*180SLGD025*
*183SLGD025*
*180MPGD025*

K041

*158SLGK041*
*160GLGK041*
*180GLGK041*
*200GLGK041*

K095

*150MPGK095*
*160SLGK095*
*180SLGK095*
*188SLGK095*
*200SLGK095*
*208SLGK095*

K216

*160MGGK216*
*168SLGK216*
*180GLGK216*
*180MGGK216*
*200GLGK216*

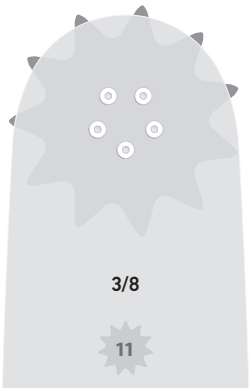


### SLH • GLH

D009

*180SLHD009*
*208SLHD009*

D025

*163SLHD025*
*180SLHD025*
*200SLHD025*

D176

*160GLHD176*
*200GLHD176*

K095

*180SLHK095*
*188SLHK095***
*39450***

** Correct fit-up for these Oregon bars requires that a 6-digit part number be used in addition to the usual 10-digit part number. Refer to the bar and chain application section for specific saw application requirements. 188SLHK095 is designed for 3/8" – 64 DL. 39450 is designed for 3/8" – 68 DL.

Narrow Kerf  Guard Mate® compatible  Intenz®

- Bar types and part numbers printed in *red italics* have been obsoleted. Contact your authorized Oregon distributor for availability.
- Guard Mate® holes are built into the noses of certain types of Oregon guide bars and allow the attachment of a Guard Mate tip guard to help reduce the risk of kickback.

# A041

**OEM Applications**
Craftsman, Cub Cadet, Dolmar, Homelite, Husqvarna, John Deere, Jonsered, Makita, McCulloch, Poulan /Poulan Pro, Redmax, Sears, Shindaiwa, Skil, Snapper, Tanaka, Toro, and others

**A041**

**T041** **Intenz®** mount

- Carlton® mount – 10
- Windsor® mount – PKU

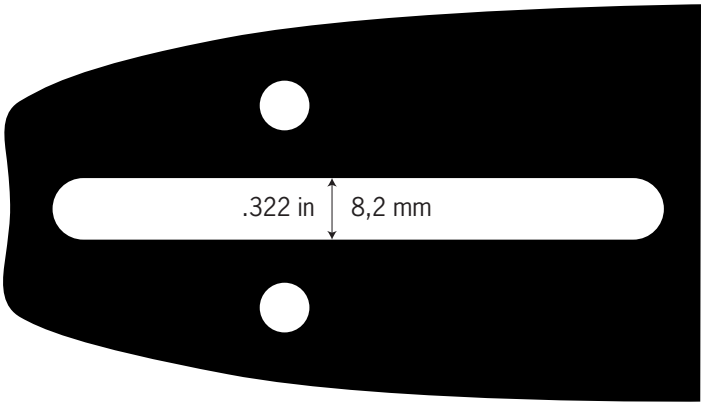


# A061

**OEM Applications**
Homelite

**A061**

- Carlton mount – 28
- Windsor mount – MXL

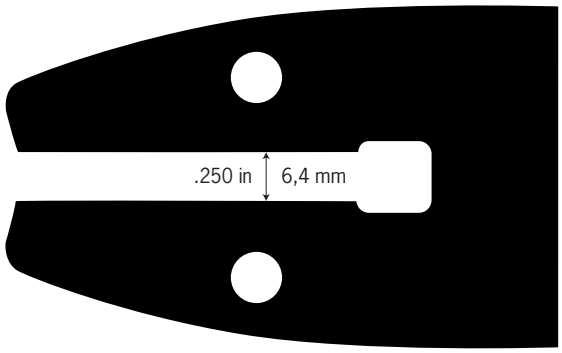


# A074

**OEM Applications**
Stihl, Olympyk (Oleo-Mac)

**A074**

- Carlton mount – 26
- Windsor mount – ST

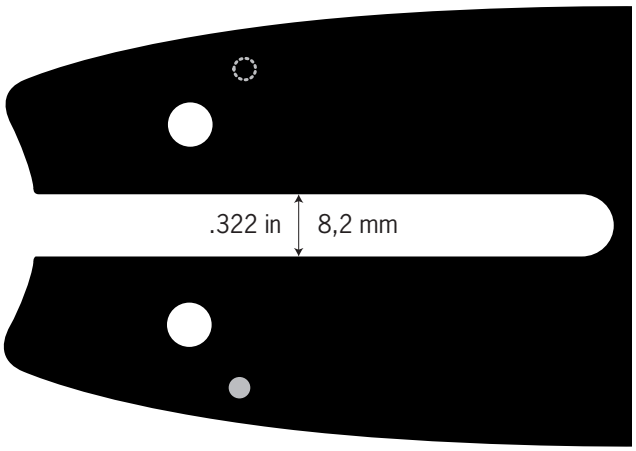

## A089

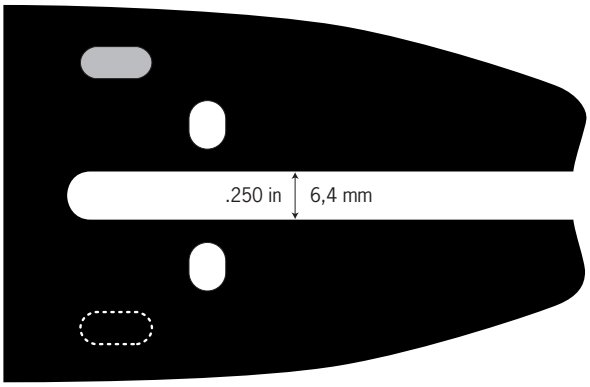


**OEM Applications**
Remington

**A089**

- Carlton® mount – 39

## A095

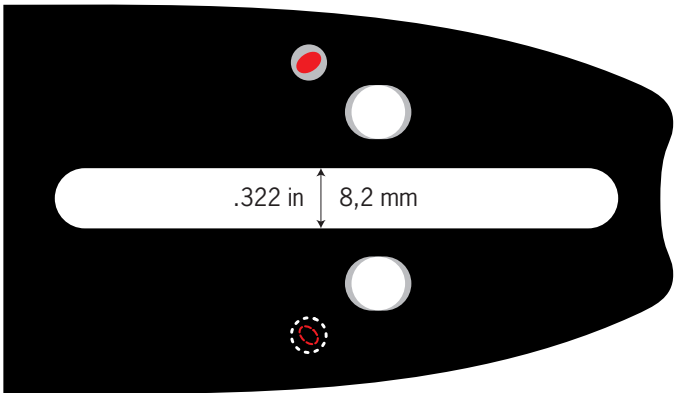


**OEM Applications**
Cub Cadet, Dolmar, Homelite, Husqvarna, John Deere, Jonsered, Makita, Maruyama pole saws, McCulloch, Olympyk (Oleo-Mac) Partner, Pioneer, Poulan/Poulan Pro, Redmax, Sears, Solo, Stanley, and others

| **A095** | |
|---|---|
| **T095** | **Intenz**® mount |

- Carlton mount – 01
- Windsor® mount – CJL

## A218

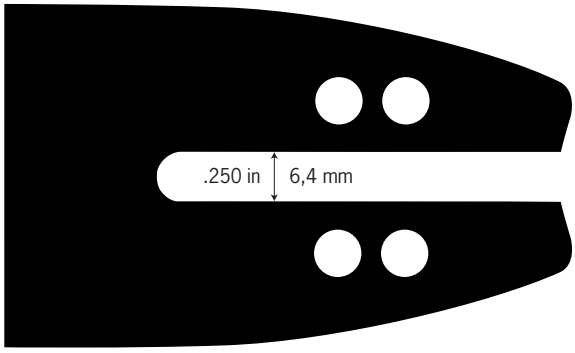


**OEM Applications**
Black+Decker, Maruyama pole saws,
Power Pruner/Echo Power Pruner, Redmax pole saws

| **A218** | |
|---|---|
| **T218** | **Intenz** mount |

- Carlton mount – 29

## A318

**OEM Applications**
McCulloch, Remington

**A318**
**T318** **Intenz**® mount

- Carlton® mount – 38
- Windsor® mount – MC

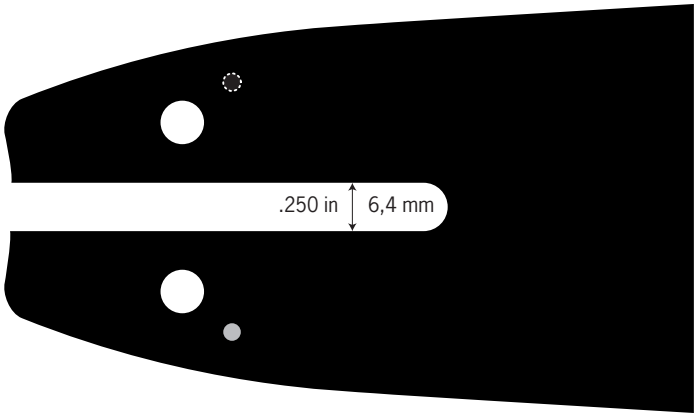


## K041

**OEM Applications**
Craftsman, Cub Cadet, Dolmar, Homelite, Husqvarna, John Deere, Jonsered, Makita, McCulloch, Poulan /Poulan Pro, Redmax, Sears, Shindaiwa, Skil, Snapper, Tanaka, Toro, and others

**K041**
**T041** **Intenz** mount

- Carlton mount – 10W
- Windsor mount – PKU

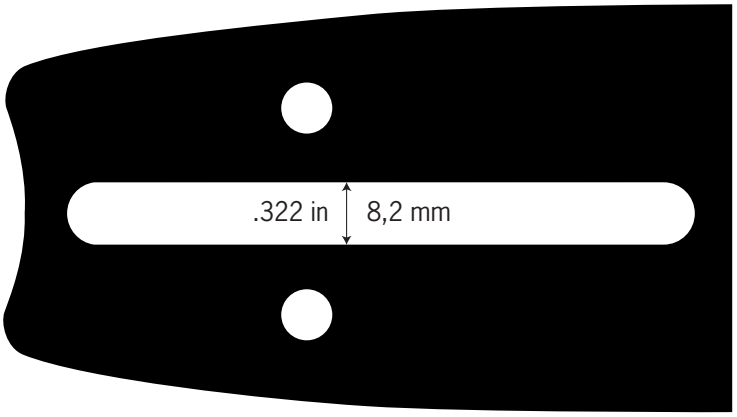


## K095

**OEM Applications**
Cub Cadet, Dolmar, Homelite, Husqvarna, John Deere, Jonsered, Makita, Maruyama pole saws, McCulloch, Olympyk (Oleo-Mac), Partner, Pioneer, Poulan/Poulan Pro, Redmax, Sears, Solo, Stanley, and others

**K095***
**Z095***

- Carlton mount – 01W
- Windsor mount – CJL

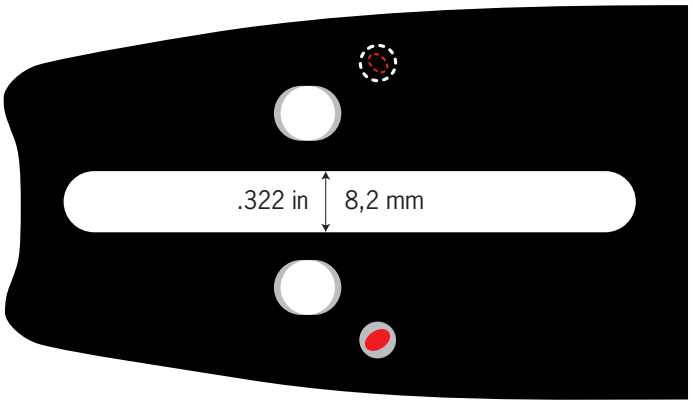


***Note**: In a few cases where two bars would have the same called length but different drive-link counts, the letter Z will be used in the motor-mount description to distinguish between them (K095 and Z095 for example)

## K216

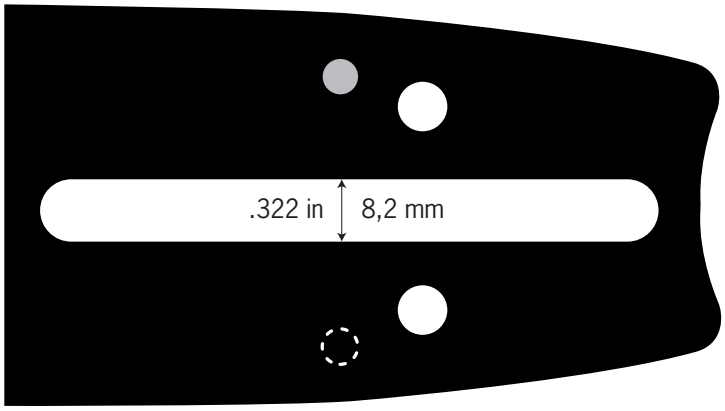


**OEM Applications**
Echo

**K216**

## D007

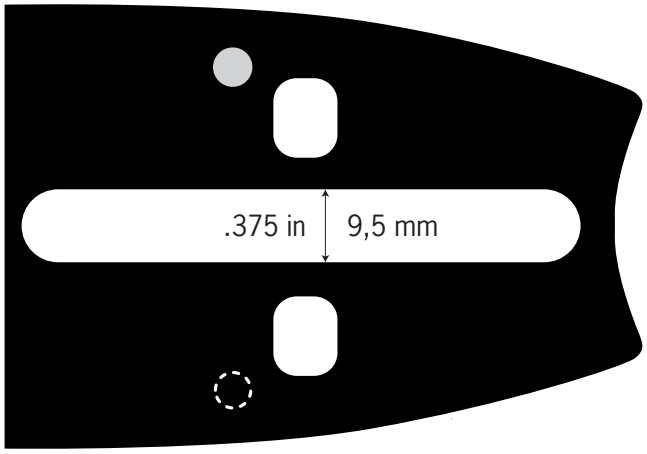


**OEM Applications**
Pioneer, Poulan/Poulan Pro

**D007**

- Carlton® mount – 21
- Windsor® mount – PP

## D009

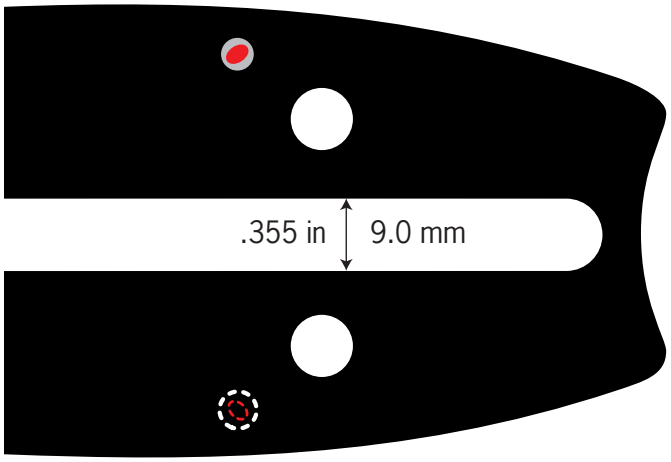


**OEM Applications**
Dolmar, Husqvarna, Jonsered, Makita, Partner, Shindaiwa, Solo

**D009**

- Carlton mount – 81
- Windsor mount – EM

## D024

**OEM Applications**
Jonsered, Olympyk (Oleo-Mac)

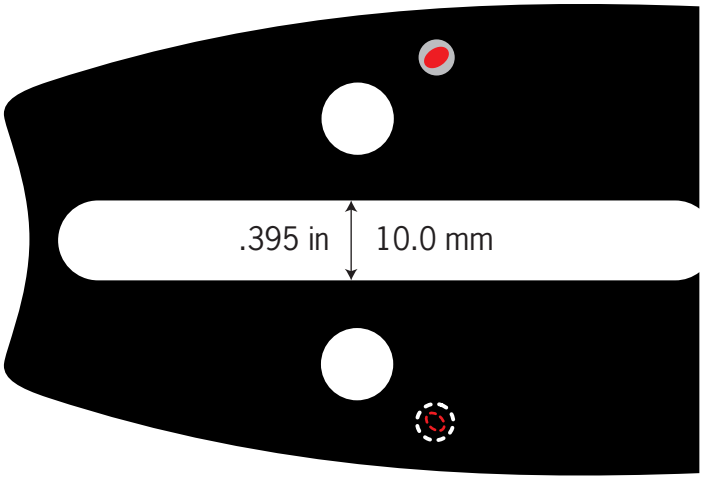


**D024**

- Carlton® mount – 71
- Windsor® mount – JR

## D025

**OEM Applications**
Stihl

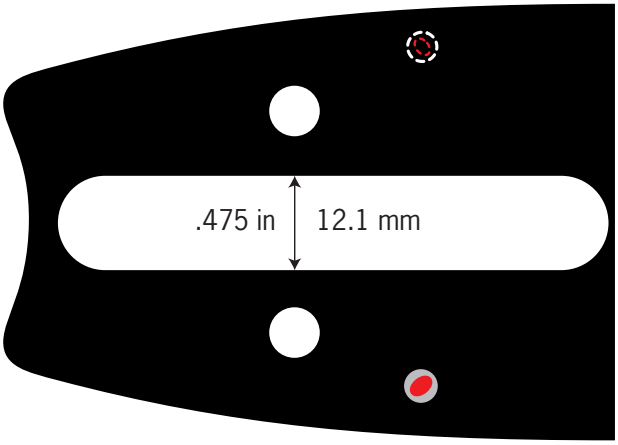


**D025**

- Carlton mount – 42
- Windsor mount – 40

## D033

**OEM Applications**
Dolmar

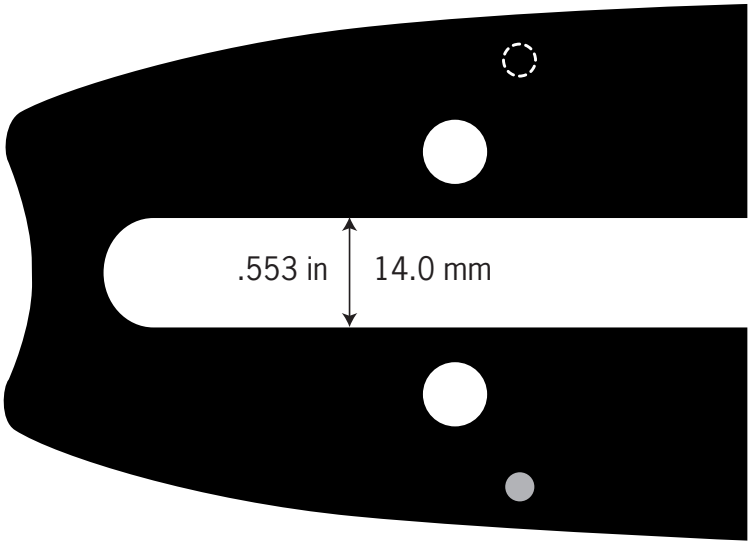


**D033**

- Carlton mount – 55

## D096

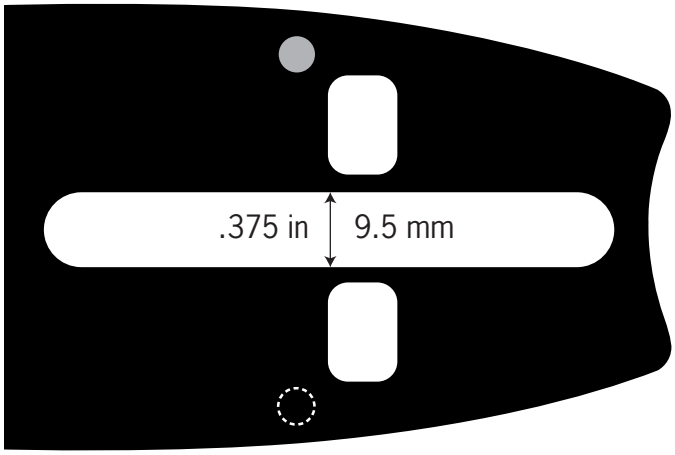


**OEM Applications**
Echo, Homelite, John Deere, Jonsered, Olympyk (Oleo-Mac), Poulan/Poulan Pro, Remington

**D096**

- Carlton® mount – 21
- Windsor® mount – HL

## D176

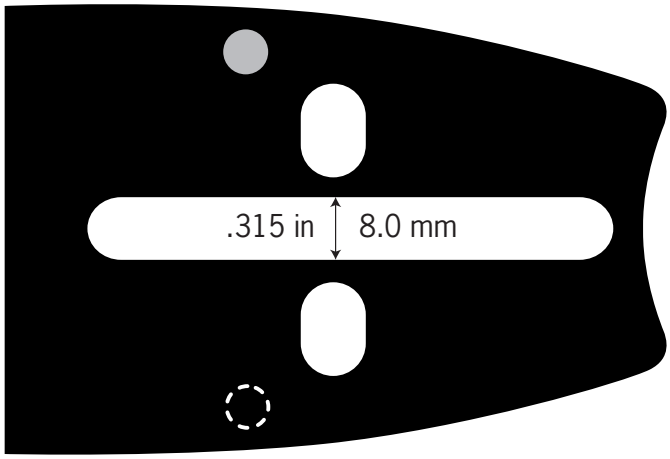


**OEM Applications**
Echo, Fairmont, John Deere, McCulloch, Poulan/Poulan Pro, Redmax, Sears, Skil, Tanaka

**D176**

- Carlton mount – 41
- Windsor mount – UXL

## D196

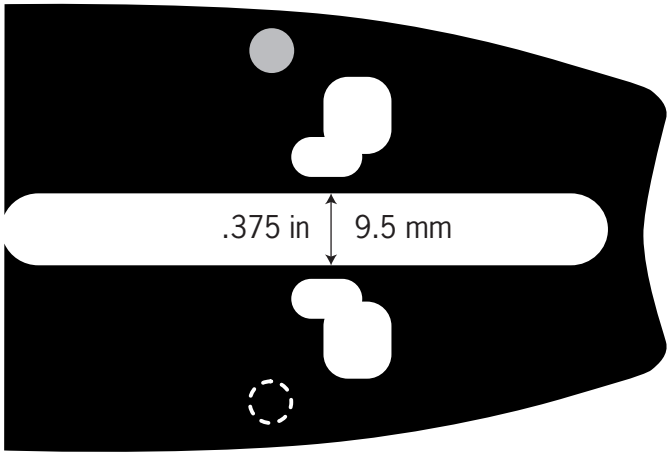


**OEM Applications**
Echo, Homelite, John Deere, Jonsered, Olympyk (Oleo-Mac), Poulan/Poulan Pro, Remington, Stanley

**D196**

- Carlton mount – 21
- Windsor mount – HL

# E031

**OEM Applications**
Stihl

**E031**

- Carlton® mount – 55
- Windsor® mount – 07

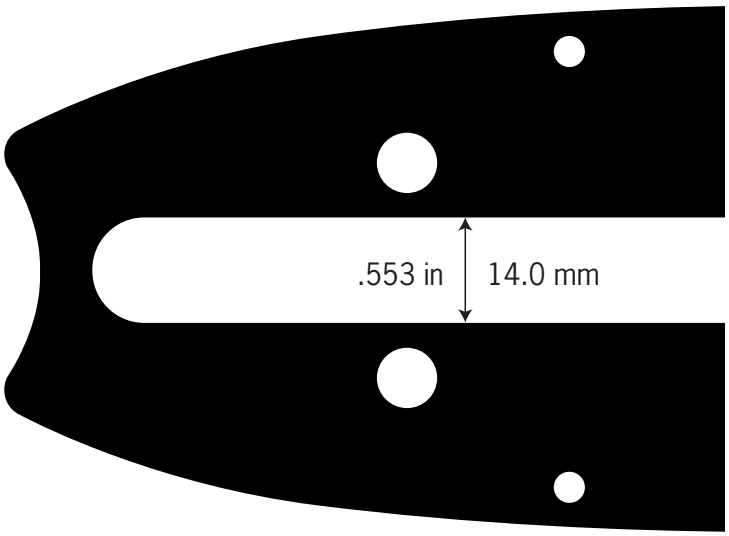


# A041 / A074 / A095

## Sculptor® Specialty Mount

**OEM Applications**
Multi-mount fits most popular chain-saws used for carving
Echo, Husqvarna, Stihl and others

| SCULPTOR mount | A041 / A095 |
|---|---|

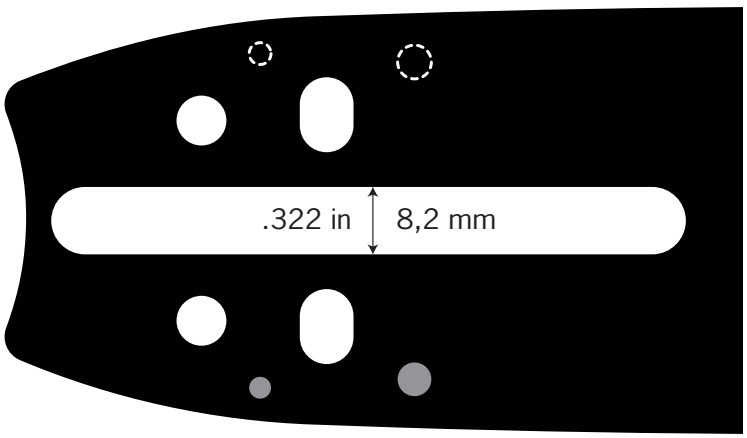


# A108

**OEM Applications**
Unitec and Cob Industry Hydraulic saws

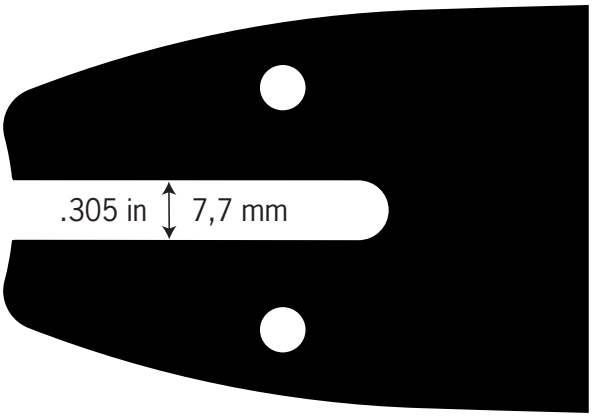

# Guide Bars – Troubleshooting



## Guide Bar Problems

### Chipped rail

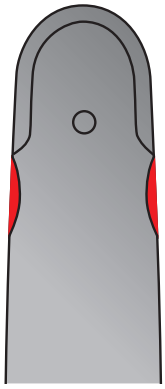

Cause
Chipping of rails behind hard tip. Continual pressure of bar on one area. Dull chain. Loose bar tension

Result
Material chipping out of one or both rails behind the hard tip

Solution
Reverse bar to reduce wear. Replace bar. (This chipping can cause chain damage)

### Thin rail and low rail

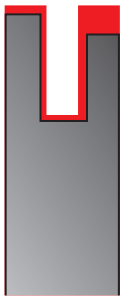

Cause
Chain leaning over, cutting crooked. Forcing dull chain to cut. Damage to cutters on one side of chain

Result
Thin rail on one or both sides of bar. Rail could be blue color in thin area

Solution
Bar cannot be repaired if rail is thin and uneven. Replace it. Make sure chain doesn't continue to lean. If it does, replace with a new chain

### Worn bar rails

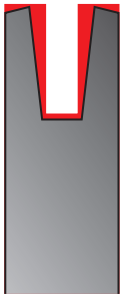

Cause
Worn bar rails are normal for a bar that has been in service for a period of time

Result
Shallow groove

Solution
Replace bar

### Wire edge bar rail

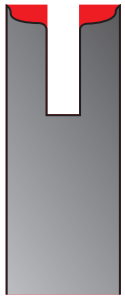

Cause
Normal wear caused by pressure of chain on edges of bar rails

Result
Rail edges may chip if wire edge is not removed

Solution
Use a flat file on edge of bar rail to remove wire edge or Bar Rail Dresser #111439

## Sprocket Nose Bar Problems

### Blue discoloration on bar nose

Cause
Nose was pinched. Friction from revolving sprocket caused heat and area turned blue. Could be lack of lubrication

Result
Entire edge turns blue or only in one or two spots

Solution
If this happens in the nose bearing area the bar is no longer service-able. Replace bar if laminated bar

### Spread nose rails and bearing loss

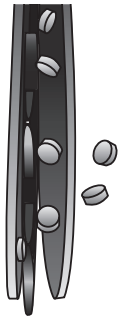

Cause
Chain jumped off bar. Carving with nose. Limb caught nose. Twisting nose. Any operating accident

Result
Spread nose rails and loss of bearings

Solution
Replace bar or replace nose of RSN bar

## Sprocket Nose Bar Problems

### Chipping at nose connection (replaceable nose)

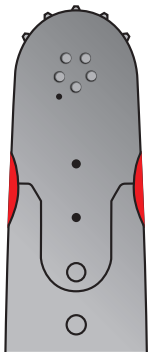

Cause
Loose chain tension. Continual pressure in this area. Heavy limbing at this point

Result
Chipping at connection of both body and nose assembly

Solution
Replace nose assembly and dress rail of bar and nose to match

### Section broken out of sprocket

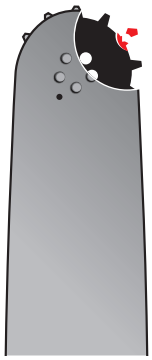

Cause
Irregular operating condition which forced drive link sideways. Throwing the chain when limbing. Chain tension run too loose

Result
Open nose. Broken sprocket. Bearings fall out. One or two broken teeth

Solution
Replace bar nose assembly.

## Basic Guide Bar Maintenance Tasks

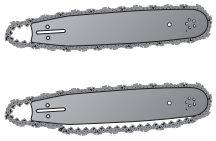

**Chain Tension**
Inspect before use and after every hour of use

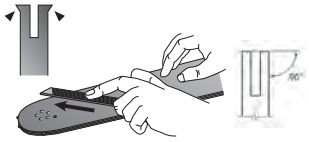

**File Bar Edge**
File bar edge to 90° weekly or use Bar Rail Dresser #111439

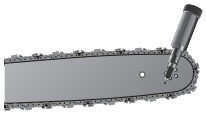

**Bar Nose Grease**
Turn nose sprocket while pumping grease until whole sprocket has new grease. Do not push dirt into hole

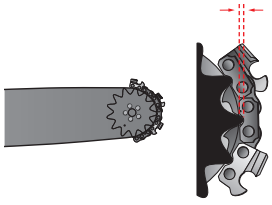

**Bar Tip Clearance**
On sprocket nose bars, check for clearance around the bar tip between top of rails and the bottom of cutters or tie straps weekly. Replace nose sprockets before cutters or tie straps contact the bar rails

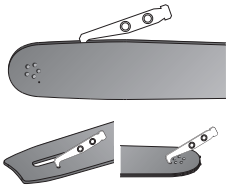

**Bar Cleaning**
Clean bar channel, grease hole and, oil hole daily

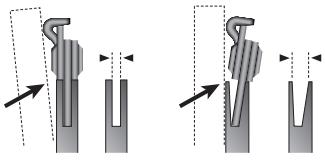

**Chain Lean**
With chain on the bar, hold a straight-edge against the bar body and against a cutter side plate. A good groove will hold the chain straight, leaving a small gap between the straight edge and bar body. A worn groove will let the chain lean until straightedge is flush with bar body. Replace bar if groove is worn. Check weekly

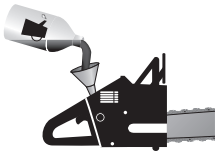

**Chain and Bar Oil**
Inspect before use and after every hour of use

OREGON

# SPROCKETS

Select the Right Sprocket . . . . . FOR 182
Power Mate® Rim Sprocket Systems . . FOR 183
Oregon® Rims . . . . . FOR 184
Pro Spur® Sprockets . . . . . FOR 185
Spur Sprockets . . . . . FOR 186
Application by Saw Model. . . . . FOR 187–203
Application by Oregon Number . . . FOR 204–208
Sprockets Troubleshooting . . . . . FOR 209–210

# Sprockets

## Selecting The Right Sprocket

Oregon® offers multiple options for different sprocket needs. The sprocket, chain, and guide bar make up the cutting system. The sprocket is an essential component of this system. The chart below will help you select the right sprocket for your system.

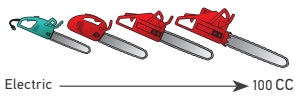


| | | 4 | 0 | | | | 8 | | | 3 | | |
|---|---|---|---|---|---|---|---|---|---|---|---|---|
| | | .043" | .050" | | | | .058" | | | .063" | | |
| Good | Spur Sprockets | 3/8 low pro | 1/4 | 3/8 low pro | .325 | 3/8 | .325 | 3/8 | .404 | .325 | 3/8 | .404 |
| | | 90 | 25 | 91 | 95 20 | | 21 | | | 22 | | |
| Better | Pro Spur® Sprockets | | | | 95 20 | 72 | 21 | 73 | 58 | 22 | 75 | 59 27 68 |
| Best | Power Mate® Rim Sprocket System | | 25 | | 95 20 | 72 | 21 | 73 | 58 | 22 | 75 | 59 27 68 |

## Power Mate® Rim Sprocket Systems

The most effective sprocket for all types of chainsaw users.

- Extend operational life by maximizing chain and bar groove alignment, while reducing overall costs
- A two-piece design includes a drum with a replaceable rim, allowing the rim to be replaced multiple times before the entire unit is replaced
- Replacement schedule: Every three rims

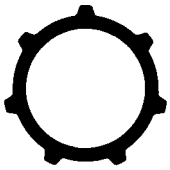

Small 7 Spline (SM7)

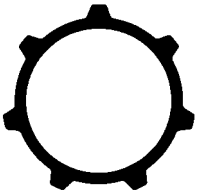

Standard 7 Spline (SD7)

| 1/4" Pitch | .325" Pitch | | 3/8" Pitch | 3/8" Pitch | .404" Pitch |
|---|---|---|---|---|---|
| 9-Tooth | 7-Tooth | 8-Tooth | 7-Tooth | 7-Tooth | 7-Tooth |
| *544658X* | *19117* | *24139X* | *21358X* | *13916X* | 10612X |
| *544679X* | *29105* | | 29917X | *18200X* | 10625X |
| *544680X* | 29175X | | 34162X | *22209* | 22132X |
| *544689X* | 30384X | | 34425X | 26831 | *22262X* |
| *552412* | *32457X* | | *38824X* | *27189X* | 35460X |
| | 34474X | | 513470X | 28094X | *37969X* |
| | 35641X | | | *29313X* | *108818X* |
| | 40068 | | | 35464X | |
| | 41726X | | | *36868X* | |
| | 100758X | | | 38470X | |
| | 100791X | | | *68209X* | |
| | 100961X | | | 100757 | |
| | 108215X | | | 102469 | |
| | *111177X* | | | 105772X | |
| | *111178X* | | | 106593X | |
| | 513442 | | | 108565X | |
| | *513447* | | | 111450X | |
| | 513472X | | | 111590X | |
| | 582642 | | | 509604X | |

**Attention Dealers:** Some Oregon® Power Mate systems have bearings installed, but some do not. Part numbers ending with a number have bearings installed. Part numbers ending with the letter "X" do not. Bearings must be purchased separately for all rim systems having part numbers that end with an X. See the facing page for information on replacement rims. See bearing fit up info starting on page FOR 204–208.

# Sprockets

## Oregon® Rims

Rims provide the ultimate cutting system performance.

- Smoother cutting and less chain wear than spur sprockets
- Radial port design uses centrifugal force to throw off sawdust and debris
- Wear-depth indicators show when it's time to replace the rim
- Replacement schedule: every two chain loops

Radial port

Wear-depth indicators

4

### Small 7 Spline (Sm7)

**1/4" Pitch**

9-Tooth

**.325" Pitch**

7-Tooth

8-Tooth

**3/8" Pitch**

7-Tooth

### Standard 7 Spline (Sd7)

**.325" Pitch**

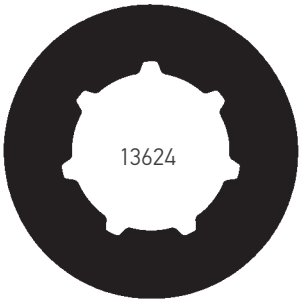


9-Tooth

**3/8" Pitch**

7-Tooth

8-Tooth

**.404" Pitch**

7-Tooth

RP Radial Port  WI Wear Indicators

NOTE: Oregon Rims are packaged in 10-packs. For other ordering multiples, check with your authorized Oregon distributor for availability.

## Power Mate® Rim Sprocket System Additional Components

Dust Covers / Oil Pump Drivers

Washers

Bearings

Neoprene Seals

Retainer Rings

NOTE: Additional components are available separately and part numbers are listed in the charts on pages FOR 204–208.

## Pro Spur® Sprockets

**Superior performance and value for professional users who prefer a spur sprocket.**

- Rugged and dependable, with excellent wear resistance.
- A one-piece design that must be replaced as a complete unit
- Replacement schedule: Every two chain loops

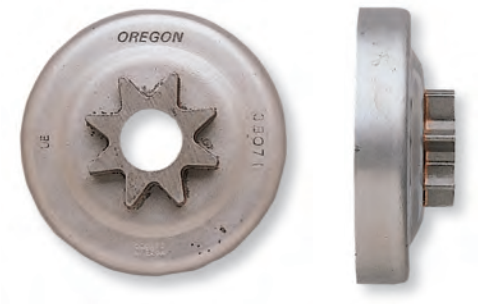

7-Tooth

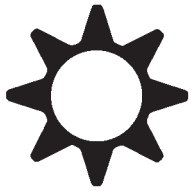

8-Tooth

7-Tooth

7-Tooth

| .325" Pitch | | 3/8" Pitch | .404" Pitch |
|---|---|---|---|
| 100876X | *38071X* | 30681X | 32669X |
| 108308X | | *32057* | |
| 111185X | | 32058 | |
| 111435X | | 32060X | |
| 38076X | | *32061X* | |
| *41725X* | | 32063X | |
| *513444* | | *32064X* | |
| 513445 | | *32071* | |
| 513471X | | *32782X* | |
| *542126* | | 32786X | |
| *577331* | | 32794X | |
| | | 38075X | |
| | | 38145X | |
| | | *38471X* | |

Part numbers printed in *red italics* have been obsoleted. Contact your authorized Oregon® distributor for availability.

Attention Dealers: Some Oregon spur sprockets have bearings installed, but some do not. Part numbers ending with a number have bearings installed. Part numbers ending with the letter "X" do not. Bearings must be purchased separately for all rim systems having part numbers that end with an X. See bearing fit up info starting on pages FOR 204–208.

## Pro Spur Sprocket Additional Components

Dust Covers / Oil Pump Drivers

Washers

Bearings

Neoprene Seals

NOTE: Additional components are available separately and part numbers are listed in the charts on pages FOR 204–208.

# Sprockets

## Spur Sprockets

**A simple, durable design for electric and small gas saws.**

- Economical with good wear resistance
- A one-piece design that must be replaced as a complete unit
- Replacement schedule: every two chain loops

4

| 8-Tooth<br>1/4" Pitch | 6-Tooth*<br>3/8" Pitch, Low Profile™ | | 7-Tooth<br>.325" Pitch |
|---|---|---|---|
| *554045X* | 27958 | 104440X | 106068X |
| *544531* | 27999 | 106114 | 106656X |
| *544554* | 28000 | 106906X | 106657X |
| *544555* | 28001 | 108567 | 106658X |
| *544675X* | 28004 | 112130 | *107504X* |
| *544676X* | *28005* | 112135 | 524076 |
| *544677X* | *28006* | 508038X | |
| *544678X* | 28016X | 513446 | |
| *552665* | 29888 | 514678 | |
| | 41569X | 522963X | |
| | 100962X | 523524X | |
| | 104102X | 553995 | |

Attention Dealers: Some Oregon® spur sprockets have bearings installed, but some do not. Part numbers ending with a number have bearings installed. Part numbers ending with the letter "X" do not. Bearings must be purchased separately for all rim systems having part numbers that end with an X. See bearing fit up info starting on pages FOR 204–208.

*For the 6-tooth spur column part numbers, use only with 3/8" Low Profile™ chains (90PX, 91P, 91PX, 91VXL) or the competitive equivalent of the previously listed chains.

## Spur Sprocket Additional Components

Washers

Bearings

Bushings

NOTE: Additional components are available separately and part numbers are listed in the charts on pages FOR 204–208.

# Sprockets – Application by Saw Models

| Chainsaw Model | Pitch | Drive Teeth | Spur Sprocket | | Power Mate® System | | | OEM | Crankshaft Diameter |
|---|---|---|---|---|---|---|---|---|---|
| | | | Occasional User | Pro | Small 7 (SM7) | Standard 7 (SD7) | Rim | | |
| **Allis Chalmers** | | | | | | | | | |
| 75 | 3/8" (91) | 6 | *28006* | | | | | | 0.438" |
| **Alpina** | | | | | | | | | |
| 400<br>450<br>500 | .325" | 7 | | 111185X | | | | | 0.394" |
| **Cub Cadet** | | | | | | | | | |
| CS5018<br>CS5220 | .325" | 7 | | | *111178X* | | 11892 | | 0.472" |
| **Dayton** | | | | | | | | | |
| 2Z970 | 3/8" (91) | 6 | *28006* | | | | | | 0.438" |
| 4Z022<br>4Z023<br>4Z109 | 3/8" (91) | 6 | 28004 | | | | | | 0.407" |
| 4Z251 | 3/8" | 7 | | | | | 68210 | | 0.500" |
| 4Z252 | 3/8" | 7 | | | | | | | 0.563" |
| 4Z397 | 3/8" | 7 | | | | | 68210 | | 0.500" |
| 4Z573 | 3/8" (91) | 6 | *28006* | | | | | | 0.438" |
| 7Z627 | 3/8" | 7 | | | | | | | 0.563" |
| **Dolmar...** | | | | | | | | | |
| 109 (old) | .325" | 8 | | | | | 11891 | 020 223 100 | 0.472" |
| | 3/8" | 7 | | | *38824X* | | 18720 | | |
| 109 (pump drive) | .325" | 7 | | | | | 11892 | | 0.472" |
| | 3/8" | 7 | | | | | 18720 | | |
| 110 (old) | .325" | 8 | | | | | 11891 | 020 223 100 | 0.472" |
| | 3/8" | 7 | | | *38824X* | | 18720 | | |
| 110 (pump drive) | .325" | 7 | | | | | 11892 | | 0.472" |
| | 3/8" | 7 | | | | | 18720 | | |
| 111 (old) | .325" | 8 | | | | | 11891 | 020 223 100 | 0.472" |
| | 3/8" | 7 | | | *38824X* | | 18720 | | |
| 111 (pump drive) | .325" | 7 | | | | | 11892 | | 0.472" |
| | 3/8" | 7 | | | | | 18720 | | |
| 112<br>113<br>114 | 3/8" | 7 | | 38075X | | *27189X* | 68210 | 119 223 100 | 0.551" |
| 115 (old) | .325" | 8 | | | | | 11891 | 020 223 100 | 0.472" |
| | 3/8" | 7 | | | *38824X* | | 18720 | | |
| 115i (pump drive) | .325" | 7 | | | | | 11892 | | 0.472" |
| | 3/8" | 7 | | | | | 18720 | | |
| 116<br>116Si<br>117<br>119<br>120<br>120 Super<br>120Si | 3/8" | 7 | | 38075X | | *27189X* | 68210 | 119 223 100 | 0.551" |
| 122<br>123<br>133<br>143<br>CA | 3/8" | 8 | | | | *16372X* | 22273 | 123 223 000 | 0.590" |
| PS-34<br>PS-45 | 3/8" (91) | 6 | 112130 | | | | | 036 223 060 | 0.472" |
| PS-340<br>PS-341 | 3/8" (91) | 6 | 112135 | | | | | | 0.394" |
| PS-5105<br>PS-5105 H | 3/8" | 7 | | | | | 18720 | 181 223 062 | |
| PS-6000i | 3/8" | 7 | | | | *111450X* | 68210 | 030 223 100 | 0.551" |



**For bearing fit up, see pages FOR 204–208.**

# Sprockets – Application by Saw Models

| Chainsaw Model | Pitch | Drive Teeth | Spur Sprocket | | Power Mate® System | | | OEM | Crankshaft Diameter |
|---|---|---|---|---|---|---|---|---|---|
| | | | Occasional User | Pro | Small 7 (SM7) | Standard 7 (SD7) | Rim | | |
| **...Dolmar** | | | | | | | | | |
| PS-6400<br>PS-6400 H<br>PS-6400 W | 3/8" | 7 | | | | | 68210 | 038 223 020 | |
| PS6800i | 3/8" | 7 | | | | *111450X* | 68210 | 030 223 100 | 0.551" |
| PS-7310<br>PS-7310 H<br>PS-7910<br>PS-7910 H<br>PS-7910 W | 3/8" | 7 | | | | | 68210 | 957 223 092 | |
| **Echo...** | | | | | | | | | |
| CS-60<br>CS-60S | 3/8" | 7 | | *32782X* | | | 68210 | 175005-00230 | 0.551" |
| CS-280e, CS280ep<br>CS-290 | 1/4" | 8 | *544555* | | | | | | 0.315" |
| | 3/8" (91) | 6 | 27999 | | | | | 175005-13931 | |
| CS-300 | 1/4" | 8 | *544675X* | | | | | | 0.394" |
| | | 9 | | | *544679X* | | 543767 | | |
| | 3/8" (91) | 6 | 106906X | | | | | 175005-13931 | |
| CS-300EVL | 1/4" | 8 | *544555* | | | | | | 0.315" |
| | 3/8" (91) | 6 | 27999 | | | | | 175005-13931 | |
| CS-301 | 1/4" | 8 | *544675X* | | | | | | 0.394" |
| | | 9 | | | *544679X* | | 543767 | | |
| | 3/8" (91) | 6 | 106906X | | | | | 175005-11530 | |
| CS-302 | 1/4" | 8 | *544554* | | | | | | 0.315" |
| | 3/8" (91) | 6 | 28000 | | | | | 175005-11530 | |
| CS-303T | 1/4" | 8 | *544675X* | | | | | 175005-39133<br>175005-39131<br>175005-39132 | 0.394" |
| | | 9 | | | *544679X* | | 543767 | | |
| | 3/8" (91) | 6 | 106906X | | | | | | |
| CS-305<br>CS-306 | 1/4" | 8 | *544675X* | | | | | | 0.394" |
| | | 9 | | | *544679X* | | 543767 | | |
| | 3/8" (91) | 6 | 106906X | | | | | | |
| CS-315<br>CS-330EVL | 1/4" | 8 | *544554* | | | | | | 0.315" |
| | 3/8" (91) | 6 | 28000 | | | | | 175005-11530 | |
| CS-330MX4<br>CS-330T<br>CS-340<br>CS-341<br>CS-345<br>CS-346 | 1/4" | 8 | *544675X* | | | | | | 0.394" |
| | | 9 | | | *544679X* | | 543767 | | |
| | 3/8" (91) | 6 | 106906X | | | | | 175005-39133<br>175005-39131<br>175005-39132 | |
| CS-351 | 1/4" | 8 | *544554* | | | | | | 0.315" |
| | 3/8" (91) | 6 | 28000 | | | | | 175005-11530 | |
| CS-355T<br>CS-360T<br>CS-361P | 1/4" | 8 | *544675X* | | | | | | 0.394" |
| | | 9 | | | *544679X* | | 543767 | | |
| | 3/8" (91) | 6 | 106906X | | | | | 175005-39133<br>175005-39131<br>175005-39132 | |
| CS-370<br>CS-400 | 3/8" (91) | 6 | 523524X | | | | | 175012-00831<br>A556000400 | 0.394" |
| CS-400EVL<br>CS-440EVL | .325" | 7 | | *513444* | 513442 | | 11892 | 175105-14630 | 0.394" |
| | 3/8" | 7 | | | | | 18720 | | |
| CS-450<br>CS-450P | .325" | 7 | | | | | 11892 | A556000440 | |
| CS-490 | .325" | 7 | | | | | 11892 | | |
| CS-451<br>CS-452<br>CS-500 | 3/8" | 7 | | 32794X | *21358X* | | 18720 | 175005-14330 | 0.394" |
| CS-490<br>CS-500P<br>CS-501P | .325" | 7 | | | | | 11892 | A5560001121<br>A556001120 | |
| CS-510EVL<br>CS-550 | 3/8" | 7 | | 32794X | *21358X* | | 18720 | 175005-14330 | 0.394" |
| CS-550P | .325" | 7 | | | | | 11892 | A556001310 | |





**For bearing fit up, see pages FOR 204–208.**

# Sprockets – Application by Saw Models

| Chainsaw Model | Pitch | Drive Teeth | Spur Sprocket | | Power Mate® System | | | OEM | Crankshaft Diameter |
|---|---|---|---|---|---|---|---|---|---|
| | | | Occasional User | Pro | Small 7 (SM7) | Standard 7 (SD7) | Rim | | |
| **...Echo** | | | | | | | | | |
| CS-600P | 3/8" | 7 | | | | | 68210 | A556000550 | |
| CS-602 | 3/8" | 7 | | | | | | | 0.394" |
| CS-610 | 3/8" | 7 | | 32794X | *21358X* | | 18720 | 175005-14330 | 0.394" |
| CS-650<br>CS-660 | 3/8" | 7 | | | | *29313X* | 68210 | 175005-14330 | 0.394" |
| CS-680 | 3/8" | 7 | | | | | 68210 | 175105-32431 | |
| CS-702<br>CS-750 | 3/8" | 7 | | | | | | | 0.394" |
| CS-800P | 3/8" | 7 | | | | | 68210 | 175105-30831<br>175105-30830 | |
| CS-3000<br>CS-3350<br>CS-3400<br>CS-3450 | 1/4" | 8 | *544675X* | | | | | | 0.394" |
| | | 9 | | | *544679X* | | 543767 | | |
| | 3/8" (91) | 6 | 106906X | | | | | 175005-39133<br>175005-39131<br>175005-39132 | |
| CS-3600<br>CS-3900 | .325" | 7 | | *513444* | 513442 | | 11892 | | 0.394" |
| | 3/8" | 7 | | | | | 18720 | | |
| CS-4000 | .325" | 7 | | | *34474X* | | 11892 | | 0.472" |
| CS-4400 | .325" | 7 | | *513444* | 513442 | | 11892 | | |
| | 3/8" | 7 | | | | | 18720 | | 0.394" |
| CS-4500<br>CS-4600<br>CS-5000 | .325" | 7 | | | *34474X* | | 11892 | | 0.472" |
| CS-5100 (after S/N 134504) | .325" | 7 | | *513444* | 513442 | | 11892 | | 0.394" |
| | 3/8" | 7 | | | | | 18720 | | |
| CS-5500 | .325" | 7 | | | *34474X* | | 11892 | 175105-19930 | 0.472" |
| CS-8000 | 3/8" | 7 | | | | | 68210 | 175105-30831<br>175105-30830 | |
| **Efco** | | | | | | | | | |
| 152<br>MT5200 | .325" | 7 | | | *111178X* | | 11892 | 50080023 | |
| 156 | .325" | 7 | | | 100758X | | 11892 | 50012050 | |
| | 3/8" | 7 | | | | 100757 | 68210 | | |
| 165 | .325" | 7 | | | 100758X | | 11892 | 50012050 | |
| | 3/8" | 7 | | | | 100757 | 68210 | 50022034 | |
| MT7200 | 3/8" | 7 | | | | | 68210 | 097000207 | |
| MT8200 | | | | | | | | | |
| **Frontier** | | | | | | | | | |
| F-35<br>FB-35 | 3/8" (91) | 6 | 28001 | | | | | | 0.394" |
| **Homelite...** | | | | | | | | | |
| 20<br>23<br>27 | 3/8" (91) | 6 | 108567 | | | | | A57344 | 0.313" |
| | .325" | 7 | 524076 | | | | | | |
| 190 | 3/8" (91) | 6 | 27958 | | | | | A95653B | 0.375" |
| 240<br>245 | .325" | 7 | | | | | 11892 | | 0.375" |
| | 3/8" | | | | 38010 | | 18720 | | |
| 330<br>360<br>410 | 3/8" | 7 | | | | | 68210 | A94302 | 0.625" |
| 450<br>550 | 3/8" | 7 | | 30681X | | | 68210 | A95620<br>A65990 | 0.625" |
| 2500<br>2700<br>3300<br>3350<br>3800<br>3816<br>3850<br>4550 | 3/8" (91) | 6 | 108567 | | | | | | 0.313" |
| | .325" | 7 | 524076 | | | | | | |



**For bearing fit up, see pages FOR 204–208.**

# Sprockets – Application by Saw Models



| Chainsaw Model | Pitch | Drive Teeth | Spur Sprocket | | Power Mate® System | | | OEM | Crankshaft Diameter |
|---|---|---|---|---|---|---|---|---|---|
| | | | Occasional User | Pro | Small 7 (SM7) | Standard 7 (SD7) | Rim | | |
| **...Homelite** | | | | | | | | | |
| 150AO<br>350 (2-5/8" clutch)<br>350HG (2-5/8" clutch)<br>350SL (2-5/8" clutch) | 3/8" | 7 | | | | *30672X* | 68210 | A12294<br>A65987A | 0.625" |
| 350<br>350HG<br>350SL<br>(3" clutch) | 3/8" | 7 | | | | | 68210 | A94302 | 0.625" |
| 35SL | 3/8" | 7 | | | | | 68210 | | 0.625" |
| EZ<br>EZ 250 AO<br>EZ Auto | 3/8" | 7 | | | | *30672X* | 68210 | A12294<br>A65987A | 0.625" |
| i3850b<br>i4150b<br>i4550b | 3/8" (91) | 6 | 108567 | | | | | | 0.313" |
| | .325" | 7 | 524076 | | | | | | |
| Little Red | 3/8" (91) | 6 | 27958 | | | | | | 0.375" |
| PS-33 | 3/8" (91) | 6 | 108567 | | | | | | 0.313" |
| | .325" | 7 | 524076 | | | | | | |
| SEZ AO | 3/8" | 7 | | | | *30672X* | 68210 | A12294<br>A65987A | 0.625" |
| Super 2<br>Super 2CC | 3/8" (91) | 6 | 27958 | | | | | A95653B | 0.375" |
| Super XL Auto<br>Super XL 925<br>(with 6-shoe clutch) | 3/8" | 7 | | 30681X | | | 68210 | A95620<br>A65990 | 0.625" |
| SXL Mini AO | 3/8" | 7 | | | | *30672X* | 68210 | A12294<br>A65987A | 0.625" |
| UT10901<br>UT10910<br>UT10926 | 3/8" (91) | 6 | 108567 | | | | | | 0.313" |
| | .325" | 7 | 524076 | | | | | | |
| VI 125 | 3/8" | 7 | | | | | 68210 | A94302 | 0.625" |
| VI 944<br>VI 955 | 3/8" | 7 | | 30681X | | | 68210 | A95620<br>A65990 | 0.625" |
| VI Super 2 | 3/8" (91) | 6 | 27958 | | | | | A95653B | 0.375" |
| XL<br>XL 2 | | | | | | | | | |
| XL-12 (after S/N 1735838) | 3/8" | 7 | | 30681X | | | 68210 | A95620<br>A65990 | 0.625" |
| XL 76 without brake | 3/8" | 7 | | | | *30672X* | 68210 | A12294<br>A65987A | 0.625" |
| XL (76-100 series) | 3/8" | 7 | | | | | 68210 | A94302 | 0.625" |
| XL 101 | 3/8" | 7 | | | | *30672X* | 68210 | A12294<br>A65987A | 0.625" |
| XL (800-924 series)<br>XL Auto | 3/8" | 7 | | 30681X | | | 68210 | A95620<br>A65990 | 0.625" |
| XL Mini | 3/8" (91) | 6 | 27958 | | | | | A95653B | 0.375" |
| XL Mini AO | 3/8" | 7 | | | | *30672X* | 68210 | A12294<br>A65987A | 0.625" |
| **Husqvarna...** | | | | | | | | | |
| 33<br>34<br>35 | 1/4" | 8 | *544531* | | | | | | 0.394" |
| | | 9 | | | *544680X* | | 543767 | | |
| | 3/8" (91) | 6 | 28001 | | | | | 507-1005-51 | |
| 36 | 1/4" | 8 | *552665* | | | | | | 0.394" |
| | | 9 | | | *552412* | | 543767 | | |
| | 3/8" (91) | 6 | 41569X | | | | | | |
| | .325" | 7 | 106656X | *41725X* | 41726X | | 11892 | | |
| 37<br>38 | 1/4" | 8 | *544531* | | | | | | 0.394" |
| | | 9 | | | *544680X* | | 543767 | | |
| | 3/8" (91) | 6 | 28001 | | | | | 507-1005-51 | |
| 39 | .325" | 7 | | | *19117* | | 11892 | 501-4573-01 | 0.438" |
| 40 | .325" | 7 | 106658X | | 35641X | | 11892 | 504-5230-04 | 0.500" |



**For bearing fit up, see pages FOR 204–208.**

| Chainsaw Model | Pitch | Drive Teeth | Spur Sprocket | | Power Mate® System | | | OEM | Crankshaft Diameter |
|---|---|---|---|---|---|---|---|---|---|
| | | | Occasional User | Pro | Small 7 (SM7) | Standard 7 (SD7) | Rim | | |
| **...Husqvarna...** | | | | | | | | | |
| 41 | 1/4" | 8 | *552665* | | | | | | 0.394" |
| | | 9 | | | *552412* | | 543767 | | |
| | 3/8" (91) | 6 | 41569X | | | | | | |
| | .325" | 7 | 106656X | *41725X* | 41726X | | 11892 | | |
| 42 (after December 1994) | .325" | 7 | | | 40068 | | 11892 | 501-6366-02 | 0.438" |
| 42 (before April 1994) | .325" | 7 | | | *29105* | | 11892 | | 0.438" |
| 44 | .325" | 7 | | | *19117* | | 11892 | 501-4573-01 | 0.438" |
| 45<br>49 | .325" | 7 | 106658X | | 35641X | | 11892 | 504-5230-04 | 0.500" |
| 50<br>51<br>55<br>55 Rancher | .325" | 7 | | *38071X* | 29175X | | 11892 | 505-3036-52 | 0.500" |
| | | 8 | | | *24139X* | | 11891 | | |
| | 3/8" | 7 | | | 34425X | | 18720 | | |
| | | | | | | *36868X* | 68210 | | |
| 61 (after S/N 0510572) | 3/8" | 7 | | *32057* | | 26831 | 68210 | 503-7014-01 | 0.500" |
| | 3/8" | 8 | | *32071* | | | | | |
| 61 (before S/N 0510572)<br>66 | 3/8" | 7 | | | | 102469 | 68210 | 501-8316-01 | 0.500" |
| 77 | 3/8" | 7 | | 32058 | | *22209* | 68210 | 501-2559-01 | 0.500" |
| | | 8 | | | | | 22273 | 501-6747-01 | |
| 133 | .325" | 7 | | | *29105* | | 11892 | 501-6366-02 | 0.438" |
| 136<br>137 | 1/4" | 8 | *552665* | | | | | | 0.374 |
| | | 9 | | | *552412* | | 543767 | | |
| | 3/8" (91) | 6 | 41569X | | | | | | |
| | .325" | 7 | 106656X | *41725X* | 41726X | | 11892 | | |
| 140 | .325" | 7 | | | *19117* | | 11892 | 501-4573-01 | 0.438" |
| 141<br>142 | 1/4" | 8 | *552665* | | | | | | 0.394" |
| | | 9 | | | *552412* | | 543767 | | |
| | 3/8" (91) | 6 | 513446 | | | | | | |
| | .325" | 7 | | 513445 | *513447* | | 11892 | | |
| 154 | .325" | 7 | | *38071X* | 29175X | | 11892 | 505-3036-52 | 0.500" |
| | | 8 | | | *24139X* | | 11891 | | |
| | 3/8" | 7 | | | 34425X | | 18720 | | |
| | | | | | | *36868X* | 68210 | | |
| 160 | 3/8" | 7 | | 32058 | | *22209* | 68210 | 501-2559-01 | 0.500" |
| | 3/8" | 8 | | | | | | 501-6747-01 | |
| 162 | 3/8" | 7 | | | | 102469 | 68210 | 501-8316-01 | 0.500" |
| 163<br>180 | 3/8" | 7 | | 32058 | | *22209* | 68210 | 501-2559-01 | 0.500" |
| | 3/8" | 8 | | | | | | 501-6747-01 | |
| 181<br>185 | 3/8" | 7 | | | | 28094X | 68210 | 503-6259-03 | 0.563" |
| | .404" | 7 | | | | 22132X | 22270 | 501-2930-01<br>501-5978-01 | |
| 234 | .325" | 7 | | | *29105* | | 11892 | 501-6366-02 | 0.438" |
| 235E<br>236 | 1/4" | 8 | *552665* | | | | | | 0.394" |
| | | 9 | | | *552412* | | 543767 | | |
| | 3/8" (91) | 6 | 41569X | | | | | | |
| | .325" | 7 | 106656X | *41725X* | 41726X | | 11892 | | |
| 238 | .325" | 7 | | | *29105* | | 11892 | 501-6366-02 | 0.438" |
| 240S<br>240SE<br>240SG | .325" | 7 | | | *19117* | | 11892 | 501-4573-01 | 0.438" |
| 240E | 1/4" | 8 | *552665* | | | | | | 0.394" |
| | | 9 | | | *552412* | | 543767 | | |
| | 3/8" (91) | 6 | 41569X | | | | | | |
| | .325" | 7 | 106656X | *41725X* | 41726X | | 11892 | | |
| 242 (after S/N 3441001) | .325" | 7 | | | 40068 | | 11892 | | 0.438" |
| 242 (before S/N 3441001) | .325" | 7 | | | *29105* | | 11892 | 501-6366-02 | 0.438" |
| 246 | .325" | 7 | | | 40068 | | 11892 | | 0.438" |



**For bearing fit up, see pages FOR 204–208.**

# Sprockets – Application by Saw Models

| Chainsaw Model | Pitch | Drive Teeth | Spur Sprocket | | Power Mate® System | | | OEM | Crankshaft Diameter |
|---|---|---|---|---|---|---|---|---|---|
| | | | Occasional User | Pro | Small 7 (SM7) | Standard 7 (SD7) | Rim | | |
| **...Husqvarna...** | | | | | | | | | |
| 254 (after S/N 345-0001) | .325" | 7 | | | 100758X | | 11892 | 503-7261-01 | 0.500" |
| | 3/8" | 7 | | | | | 18720 | | |
| | | | | | | 100757 | 68210 | 503-7009-01 | |
| 254 (before S/N 345-1001) | .325" | 7 | | *38071X* | 29175X | | 11892 | 505-3036-52 | 0.500" |
| | | 8 | | | *24139X* | | 11891 | | |
| | 3/8" | 7 | | | 34425X | | 18720 | | |
| | | | | | | *36868X* | 68210 | | |
| 257 (after S/N 314-0001) | .325" | 7 | | | 100758X | | 11892 | 503-7261-01 | 0.500" |
| | 3/8" | 7 | | | | | 18720 | | |
| | | | | | | 100757 | 68210 | 503-7009-01 | |
| 260 | 3/8" | 7 | | 32058 | | *22209* | 68210 | 501-2559-01 | 0.500" |
| | | 8 | | | | | 22273 | 501-6747-01 | |
| 262XP (after S/N 345-0001) | .325" | 7 | | | 100758X | | 11892 | 503-7261-01 | 0.500" |
| | 3/8" | 7 | | | | | 18720 | | |
| | | | | | | 100757 | 68210 | 503-7009-01 | |
| 262XP (before S/N 345-1001) | .325" | 7 | | *38071X* | 29175X | | 11892 | | 0.500" |
| | | 8 | | | *24139X* | | 11891 | | |
| | 3/8" | 7 | | | 34425X | | 18720 | | |
| | | | | | | *36868X* | 68210 | | |
| 263 | 3/8" | 7 | | 32058 | | *22209* | 68210 | 501-2559-01 | 0.500" |
| | | 8 | | | | | 22273 | 501-6747-01 | |
| 266 (after S/N 0510000) | 3/8" | 7 | | *32057* | | 26831 | 68210 | 503-7014-01 | 0.500" |
| | | 8 | | *32071* | | | | | |
| 266 (before S/N 0510000) | 3/8" | 7 | | | | 102469 | 68210 | 501-8316-01 | 0.500" |
| 268 (after S/N 0510000) | 3/8" | 7 | | *32057* | | 26831 | 68210 | 503-7014-01 | 0.500" |
| | | 8 | | *32071* | | | | | |
| 268 (before S/N 0510000) | 3/8" | 7 | | | | 102469 | 68210 | 501-8316-01 | 0.500" |
| 272 (after S/N 051000) | 3/8" | 7 | | *32057* | | 26831 | 68210 | 503-7014-01 | 0.500" |
| | | 8 | | *32071* | | | | | |
| 272 (before S/N 0510000) | 3/8" | 7 | | | | 102469 | 68210 | 501-8316-01 | 0.500" |
| 280 | 3/8" | 7 | | 32058 | | *22209* | 68210 | 501-2559-01 | 0.500" |
| | | 8 | | | | | 22273 | 501-6747-01 | |
| 281<br>285<br>288<br>298 | 3/8" | 7 | | | | 28094X | 68210 | 503-6259-03 | 0.563" |
| | .404" | 7 | | | | 22132X | 22270 | 501-2930-01<br>501-5978-01 | |
| 334T<br>335<br>335XPT<br>336<br>338<br>338XPT<br>339<br>339XP | 1/4" | 8 | *544678X* | | | | | 537-0791-01 | 0.394" |
| | 3/8" (91) | 6 | 522963X | | | | | 503-8227-01<br>503-8222-71 | |
| 340SE<br>340SG | .325" | 7 | | | *19117* | | 11892 | 501-4573-01 | 0.438" |
| 340<br>340e<br>345<br>345e | .325" | 7 | | 108308X | | | 11892 | 578-0979-01<br>503-9800-02 | 0.500" |
| 346<br>346XP<br>346XPG | .325" | 7 | | | 108215X | | 11892 | 503-9800-02 | 0.500" |
| 350 | .325" | 7 | | 108308X | | | 11892 | 578-0979-01 | 0.500" |
| 351 | .325" | 7 | | | 108215X | | 11892 | 503-9800-02 | |
| 353<br>353E-Tech | .325" | 7 | | | 108215X | | 11892 | 503-9800-02 | 0.500" |





**For bearing fit up, see pages FOR 204–208.**

| Chainsaw Model | Pitch | Drive Teeth | Spur Sprocket | | Power Mate® System | | | OEM | Crankshaft Diameter |
|---|---|---|---|---|---|---|---|---|---|
| | | | Occasional User | Pro | Small 7 (SM7) | Standard 7 (SD7) | Rim | | |
| **...Husqvarna** | | | | | | | | | |
| 355<br>355EPA | .325" | 7 | | 108308X | 108215X | | 11892 | 578-0979-01<br>503-9800-02 | 0.500" |
| | 3/8" | 7 | | | | 108565X | 68210 | 503-9348-71 | |
| 357<br>357EPA<br>357XP<br>359<br>359EPA | .325" | 7 | | | 108215X | | 11892 | 503-9800-02 | 0.500" |
| | 3/8" | 7 | | | | 108565X | 68210 | 503-9348-71 | |
| 362<br>365<br>371<br>372<br>372XP<br>372XPG | 3/8" | 7 | | | | 106593X<br>105772X | 68210 | 503-9326-01<br>503-9324-71 | 0.472" |
| 380 | 3/8" | 7 | | 32058 | | *22209* | 68210 | 501-2559-01 | 0.500" |
| | | 8 | | | | | 22273 | 501-6747-01 | |
| 385XP<br>385XPG | 3/8" | 7 | | | | 111590X | 68210 | 537-1379-71 | 0.472" |
| 390XP<br>390XPW | 3/8" | 7 | | | | 111590X | 68210 | 537-1379-71 | 0.472" |
| | | 8 | | | | | 22273 | 537-1379-72 | |
| | .404" | 7 | | | | | 22270 | 537-1379-02 | |
| 394<br>394XP<br>395<br>395XP<br>395XPG<br>395XPW | 3/8" | 7 | | | | 28094X | 68210 | 503-6259-03<br>503-6259-01 | 0.563" |
| | .404" | 7 | | | | 22132X | 22270 | 501-2930-01<br>503-6259-04<br>503-6259-02<br>501-5978-01 | |
| 435<br>435E<br>440<br>440E | 3/8" (91) | 6 | 553995 | | | | | | 0.472" |
| | .325" | 7 | | *577331* | 582642 | | | 505-4415-01 | |
| 444 | .325" | 7 | | | *19117* | | 11892 | 501-4573-01 | 0.438" |
| 445<br>445E<br>450<br>450E<br>450 Rancher | .325" | 7 | | 108308X | 108215X | | 11892 | 578-0979-01<br>503-9800-02 | 0.500" |
| 455<br>455 Rancher<br>460<br>460 Rancher | .325" | 7 | | 513471X | 513472X | | 11892 | 537-2917-02 | 0.500" |
| | 3/8" | 7 | | | 513470X | | 18720 | | |
| 480 | 3/8" | 7 | | 32058 | | *22209* | 68210 | 501-2559-01 | 0.500" |
| | | 8 | | | | | 22273 | 501-6747-01 | |
| 545<br>550XP<br>550XPG | .325" | 7 | | | | | 11892 | 575-2610-03 | |
| 555<br>560 | .325" | 7 | | | | | 11892 | 575-2610-03 | |
| | 3/8" | 7 | | | | | 18720 | 575-2610-04 | |
| 562XP | .325" | 7 | | | | | 11892 | 575-2610-03 | |
| | 3/8" | 7 | | | | | 18720 | 575-2610-04 | |
| 562XPG | .325" | 7 | | | | | 11892 | 575-2610-03 | |
| | 3/8" | 7 | | | | | 18720 | 575-2610-04 | |
| 570<br>575XP | 3/8" | 7 | | | | 106593X | 68210 | 503-9326-01<br>503-9324-71 | 0.472" |
| 576XP<br>576XPG<br>576XPW | 3/8" | 7 | | | | 105772X | 68210 | 502-4404-02 | |
| | | 8 | | | | | 22273 | 502-4404-03 | |
| 1100<br>2100<br>2101 | 3/8" | 7 | | | | 28094X | 68210 | 503-6259-03 | 0.563" |
| | .404" | 7 | | | | 22132X | 22270 | 501-2930-01<br>501-5978-01 | |
| 3120XP<br>Jungle 3120 | .404" | 7 | | | | *37969X* | 22270 | | 0.563" |
| L-65 | 3/8" | 7 | | 32058 | | *22209* | 68210 | 501-2559-01 | 0.500" |
| | | 8 | | | | | 22273 | 501-6747-01 | |



**For bearing fit up, see pages FOR 204–208.**

# Sprockets – Application by Saw Models

| Chainsaw Model | Pitch | Drive Teeth | Spur Sprocket | | Power Mate® System | | | OEM | Crankshaft Diameter |
|---|---|---|---|---|---|---|---|---|---|
| | | | Occasional User | Pro | Small 7 (SM7) | Standard 7 (SD7) | Rim | | |
| **John Deere...** | | | | | | | | | |
| 25EV | 3/8" (91) | 6 | 27999 | | | | | | 0.315" |
| 28<br>30<br>35<br>35EV<br>40V | 3/8" (91) | 6 | 28000 | | | | | | 0.315" |
| 45 | .325" | 7 | | | 513442 | | 11892 | | 0.394" |
| | 3/8" | 7 | | *513444* | | | 18720 | | |
| 50V<br>55EV<br>55V | 3/8" | 7 | | 32794X | *21358X* | | 18720 | | 0.394" |
| 60V | 3/8" | 7 | | | | | | | 0.394" |
| 65EV | 3/8" | 7 | | | | *29313X* | 68210 | | 0.394" |
| 70V<br>80V | 3/8" | 7 | | | | | | | 0.394" |
| 7600 | 3/8" | 7 | | 32794X | *21358X* | | 18720 | | 0.394" |
| CS46<br>CS52 | .325" | 7 | | | *111177X* | | 11892 | | 0.472" |
| CS56<br>CS62 | .325" | 7 | | | 100758X | | 11892 | | 0.500" |
| | 3/8" | 7 | | | | 100757 | 68210 | | |
| CS71<br>CS81 | 3/8" | 7 | | | | | 68210 | | 0.551" |
| Green Machine | 3/8" | 7 | | 32794X | *21358X* | | 18720 | | 0.394" |
| **Jonsered...** | | | | | | | | | |
| 36 | 3/8" (91) | 6 | 28001 | | | | | 100551 | 0.394" |
| 45<br>49<br>50<br>51<br>52 | .325" | 8 | | | | | 11892 | 504 52 30-00 | |
| 361<br>365<br>370 | 3/8" (91) | 6 | 28001 | | | | | | 0.394" |
| 410<br>420<br>425<br>435 | .325" | 7 | 106658X | | 35641X | | 11892 | 504 52 30-04 | 0.500" |
| 450 | .325" | 7 | | | | | 11892 | | 0.472" |
| | | 8 | | | | | 11891 | 504 52 30-07 | |
| | 3/8" | 7 | | | *29496X* | | 18720 | 503 17 40-01 | |
| 451 | .325" | 8 | | | | | 11892 | 504-52-30-00 | 0.500" |
| 455 | .325" | 7 | | | | | 11892 | | 0.472" |
| | | 8 | | | | | 11891 | 504 52 30-07 | |
| | 3/8" | 7 | | | *29496X* | | 18720 | 503 17 40-01 | |
| 490 | .325" | 7 | | | 29175X | | 11892 | 505 30 36-52 | 0.500" |
| | | 8 | | *38071X* | *24139X* | | 11891 | | |
| | 3/8" | 7 | | | | *36868X* | 68210 | | |
| 510<br>520 | .325" | 7 | | | | | 11892 | | 0.472" |
| | | 8 | | | | | 11891 | 504 52 30-07 | |
| | 3/8" | 7 | | | *29496X* | | 18720 | 503 17 40-01 | |
| 521 | .325" | 8 | | | | | 11892 | 504 52 30-00 | 0.500" |
| 525<br>535 | .325" | 7 | | | | | 11892 | | 0.472" |
| | | 8 | | | | | 11891 | 504 52 30-07 | |
| | 3/8" | 7 | | | *29496X* | | 18720 | 503 17 40-01 | |
| 590 | .325" | 7 | | | 29175X | | 11892 | 505 30 36-52 | 0.500" |
| | | 8 | | *38071X* | *24139X* | | 11891 | | |
| | 3/8" | 7 | | | | *36868X* | 68210 | | |
| 625 (after S/N 0510123) | 3/8" | 7 | | *32057* | | 26831 | 68210 | 501 83 16-01<br>503 70 09-01 | 0.500" |
| | | 8 | | *32071* | | | | | |
| 625 (before S/N 0510123) | 3/8" | 7 | | | | 102469 | 68210 | | 0.500" |
| 630 (after S/N 0510000) | 3/8" | 7 | | *32057* | | 26831 | 68210 | 501 83 16-01 | 0.500" |
| | | 8 | | *32071* | | | | 503 70 09-01 | |





For bearing fit up, see pages FOR 204–208.

| Chainsaw Model | Pitch | Drive Teeth | Spur Sprocket | | Power Mate® System | | | OEM | Crankshaft Diameter |
|---|---|---|---|---|---|---|---|---|---|
| | | | Occasional User | Pro | Small 7 (SM7) | Standard 7 (SD7) | Rim | | |
| **...Jonsered** | | | | | | | | | |
| 630 (before S/N 0510000) | 3/8" | 7 | | | | 102469 | 68210 | | 0.500" |
| 630 Super (after S/N 0510000) | 3/8" | 7 | | *32057* | | 26831 | 68210 | 501 83 16-01 | 0.500" |
| | | 8 | | *32071* | | | | 503 70 09-01 | |
| 630 Super (before S/N 0510000) | 3/8" | 7 | | | | 102469 | 68210 | | 0.500" |
| 630 West Coast (after S/N 0510000) | 3/8" | 7 | | *32057* | | 26831 | 68210 | 501 83 16-01 | 0.500" |
| | | 8 | | *32071* | | | | 503 70 09-01 | |
| 630 West Coast (before S/N 0510000) | 3/8" | 7 | | | | 102469 | 68210 | | 0.500" |
| 670 (after S/N 0510153) | 3/8" | 7 | | *32057* | | 26831 | 68210 | 501 83 16-01 | 0.500" |
| | | 8 | | *32071* | | | | 503 70 09-01 | |
| 670 (before S/N 0510123) | 3/8" | 7 | | | | 102469 | 68210 | | 0.500" |
| 820<br>830<br>910<br>920<br>930 | 3/8" | 8 | | | | *28563X* | 22273 | | 0.551" |
| 1020 | 3/8" | 7 | | | | | 68210 | | 0.551" |
| 2035<br>2036<br>2040 | 3/8" (91) | 6 | 41569X | | | | | | 0.394" |
| | .325" | 7 | 106656X | *41725X* | 41726X | | 11892 | | |
| 2041<br>2045<br>2050 | .325" | 7 | 106658X | | 35641X | | 11892 | 504 52 30-04 | 0.500" |
| 2051<br>2054<br>2055 | .325" | 7 | | | | | 11892 | | 0.472" |
| | | 8 | | | | | 11891 | 504 52 30-07 | |
| | 3/8" | 7 | | | *29496X* | | 18720 | 503 17 40-01 | |
| 2063 | .325" | 7 | | | | | 11892 | 503 93 95-71 | 0.472" |
| | 3/8" | | | | | | 18720 | | |
| 2065<br>2071 | 3/8" | 7 | | | | 106593X | 68210 | 503 93 24-71 | 0.472" |
| | | 8 | | | | | 22273 | 503 93 24-72 | |
| 2095 | 3/8" | 7 | | | | 28094X | 68210 | | |
| CS2137 | 3/8" (91) | 6 | 41569X | | | | | | 0.394" |
| CS2141<br>CS2145 | .325" | 7 | | 108308X | | | | 578 09 79-01<br>503 98 00-02 | 0.500" |
| CS2149 | .325" | 7 | | | 108215X | | 11892 | | |
| CS2150<br>CS2152<br>CS2153 | .325" | 7 | | | 108215X | | 11892 | | 0.500" |
| CS2156<br>CS2159 | .325" | 7 | | | 108215X | | 11892 | 503 98 00-02 | 0.500" |
| | 3/8" | 7 | | | | 108565X | 68210 | 503 93 48-71 | 0.500" |
| CS2163 | .325" | 7 | | | | | 11892 | 503 93 95-71 | |
| CS2165<br>CS2166<br>CS2171<br>CS2171WH<br>CS2172 | 3/8" | 7 | | | | 106593X | 68210 | 503 93 24-71 | 0.472" |
| | | 8 | | | | | 22273 | 503 93 24-72 | |
| CS2188 | 3/8" | 7 | | | | 111590X | 68210 | 537 13 79-71 | 0.472" |
| | | 8 | | | | | 22273 | 537 13 79-72 | |
| CS2234<br>CS2238 | 3/8" (91) | | 41569X | | | | | | 0.394" |
| CS2240, CS2240S | .325" | 7 | | *577331* | 582642 | | | 505-4415-01 | 0.472" |
| CS2245<br>CS2250<br>CS2250s | .325" | 7 | | 108308X | 108215X | | 11892 | 578 09 79-01 | 0.500" |
| CS2260WH | .325" | 7 | | | | | 11892 | 575 26 10-01 | 0.500" |
| | 3/8" | | | | | | 68210 | 575 26 10-02 | |



**For bearing fit up, see pages FOR 204–208.**

# Sprockets – Application by Saw Models

| Chainsaw Model | Pitch | Drive Teeth | Spur Sprocket | | Power Mate® System | | | OEM | Crankshaft Diameter |
|---|---|---|---|---|---|---|---|---|---|
| | | | Occasional User | Pro | Small 7 (SM7) | Standard 7 (SD7) | Rim | | |
| **Makita** | | | | | | | | | |
| DCS 34 | 3/8" (91) | 6 | 112130 | | | | | | 0.472" |
| DCS 340<br>DCS 341 | 3/8" (91) | 6 | 112135 | | | | | | 0.551" |
| DCS 430 | .325" | 8 | | | | | | | 0.472" |
| DCS 520i<br>DCS5200i | .325" | 7 | | | | | 11891 | | |
| | 3/8" | 7 | | | *38824X* | | 18720 | | |
| DCS 6000i<br>DCS 6800i | 3/8" | 7 | | | | *111450X* | 68210 | | 0.551" |
| DCS 6401<br>DCS 6421 | 3/8" | 7 | | | | | 68210 | 957-223-092 | |
| **Mastercraft** | | | | | | | | | |
| 54-5659<br>54-5661<br>54-5662<br>54-5663 | 3/8" (91) | 6 | 28004 | | | | | | 0.407" |
| 54-5671 | 3/8" | 7 | | | | | 68210 | | 0.500" |
| 54-5675 | .325" | 7 | | | | | 11892 | | 0.500" |
| 54-5720 before April '99<br>54-5721 before April '99<br>54-5722 before April '99 | 3/8" (91) | 6 | 29888 | | | | | | 0.394" |
| 54-5723 before April '99 | 3/8" | 7 | | 32786X | | *68209X* | 68210 | | 0.500" |
| **McCulloch...** | | | | | | | | | |
| 515 | 3/8" | 7 | | 32786X | | *68209X* | 68210 | 65370 | 0.500" |
| 538<br>540 | 3/8" (91) | 6 | | | | | | | 0.394" |
| 605<br>610<br>650<br>655<br>700<br>805<br>850<br>855 | 3/8" | 7 | | 32786X | | *68209X* | 68210 | 65370 | 0.500" |
| 2000<br>2010<br>2012<br>2014<br>2016<br>2116<br>2316<br>2318<br>3000<br>3200<br>3210<br>3214<br>3216<br>3505<br>3516<br>3805<br>3818 | 3/8" (91) | 6 | 29888 | | | | | 215252 | 0.394" |
| Mac 1-10<br>Mac 2-10<br>Mac 3-10<br>Mac 4-10<br>Mac 5-10<br>Mac 6-10<br>Mac 7-10<br>Mac 8-10<br>Mac 9-10<br>Mac 10-10 | 3/8" | 7 | | 32786X | | *68209X* | 68210 | 65370 | 0.500" |
| Mac 110-140<br>Mini Mac<br>MS1432<br>MS1435<br>MS1838<br>PM480<br>Power Mac 310-340<br>Pro Mac 3205 Av-14 | 3/8" (91) | 6 | 29888 | | | | | 215252 | 0.394" |





**For bearing fit up, see pages FOR 204–208.**

| Chainsaw Model | Pitch | Drive Teeth | Spur Sprocket | | Power Mate® System | | | OEM | Crankshaft Diameter |
|---|---|---|---|---|---|---|---|---|---|
| | | | Occasional User | Pro | Small 7 (SM7) | Standard 7 (SD7) | Rim | | |
| **...McCulloch** | | | | | | | | | |
| Pro Mac 55<br>Pro Mac 60<br>SP-70<br>Timber Bear | 3/8" | 7 | | 32786X | | *68209X* | 68210 | 65370 | 0.500" |
| Titan 35-40 | 3/8" (91) | 6 | 29888 | | | | | 215252 | 0.394" |
| **Montgomery Ward** | | | | | | | | | |
| TMY24062<br>TMY24064<br>TMY24066<br>TMY24068 | 3/8" (91) | 6 | 29888 | | | | | | 0.394" |
| TMY24084<br>TMY24086 | 3/8" | 7 | | 32786X | | *68209X* | 68210 | | 0.500" |
| **Oleo-Mac (Olympyk)** | | | | | | | | | |
| 251<br>252<br>254 | 3/8" | 7 | | | | *13916X* | 68210 | | 0.472" |
| 260<br>261<br>271<br>272<br>280<br>281<br>284 | 3/8" | 8 | | | | *26580X* | 22273 | | 0.591" |
| 350 (before 1988)<br>355 | 3/8" | 7 | | | | *13916X* | 68210 | | 0.472" |
| 400<br>460<br>461<br>480<br>481<br>482 | 3/8" | 8 | | | | *26580X* | 22273 | | 0.591" |
| 931 | 3/8" (91) | 6 | 104440X | | | | | | 0.394" |
| 938<br>941<br>942<br>945<br>946 | .325" | 7 | 106068X | | *111177X* | | 11892 | | 0.472" |
| 947 | .325" | 7 | | | *111178X* | | 11892 | | 0.472" |
| 951 | .325" | 7 | 106068X | | *111177X* | | 11892 | | 0.472" |
| 952 | .325" | 7 | | | *111178X* | | 11892 | | 0.472" |
| 956 | .325" | 7 | | | 100758X | | 11892 | | 0.500" |
| 962 | 3/8" | 7 | | | | 100757 | 68210 | | |
| 965HD | 3/8" | 7 | | | | | 68210 | | 0.500" |
| 970<br>980 | 3/8" | 7 | | | | | 68210 | | 0.551" |
| 999F | .404" | 7 | | | | | 22270 | 099900387 | |
| GS820 | 3/8" | 7 | | | | | 68210 | 097000207 | |
| **Oregon** | | | | | | | | | |
| CS250-S6<br>CS250-E6<br>CS250-A6<br>CS300<br>CS300-E6<br>CS300-A6 | 3/8" (91) | 6 | 546622 | | | | | | |
| CS1500 | 3/8" (91) | 6 | 570964 | | | | | | |
| PS250 | 3/8" (90) | 7 | 571043 | | | | | | |
| **Partner...** | | | | | | | | | |
| 22<br>330<br>350 | 3/8" (91) | 6 | 28001 | | | | | | 0.394" |
| 351 | 3/8" (91) | 6 | 106114 | | | | | | 0.394" |



**For bearing fit up, see pages FOR 204–208.**

# Sprockets – Application by Saw Models



| Chainsaw Model | Pitch | Drive Teeth | Spur Sprocket | | Power Mate® System | | | OEM | Crankshaft Diameter |
|---|---|---|---|---|---|---|---|---|---|
| | | | Occasional User | Pro | Small 7 (SM7) | Standard 7 (SD7) | Rim | | |
| **...Partner** | | | | | | | | | |
| 365 | 3/8" (91) | 6 | 41569X | | | | | | 0.394" |
| | .325" | 7 | 106656X | *41725X* | 41726X | | 11892 | | |
| 400 | .325" | 7 | | | 35641X | | 11892 | | 0.500" |
| 405 | 3/8" (91) | 6 | 41569X | | | | | | 0.394" |
| | .325" | 7 | 106656X | *41725X* | 41726X | | 11892 | | |
| 410 | .325" | 7 | | | 35641X | | 11892 | | 0.500" |
| 421 | 3/8" | 7 | | | | | 68210 | | 0.551" |
| 450<br>460<br>490<br>510 | .325" | 7 | | | 35641X | | 11892 | | 0.500" |
| 1612<br>1613<br>1614<br>1616 | 3/8" (91) | 6 | 28001 | | | | | | 0.394" |
| 7000<br>F55<br>F65 | 3/8" | 7 | | | | | 68210 | | 0.551" |
| Mini P3<br>Mini P | 3/8" (91) | 6 | 28001 | | | | | | 0.394" |
| P-100 (after March 1977) | 3/8" | 7 | | | | | 68210 | | 0.551" |
| P2<br>P3 | 3/8" (91) | 6 | 28001 | | | | | | 0.394" |
| P400 | .325" | 7 | | *38071X* | 29175X | | 11892 | | 0.500" |
| P500 | | 8 | | | *24139X* | | 11891 | | |
| P545 | 3/8" | 7 | | | 34425X | | 18720 | | |
| P5000<br>P5100 | | 7 | | | | *36868X* | 68210 | | |
| P70 | 3/8" | 7 | | | | | 68210 | | 0.551" |
| P-85 | 3/8" | 7 | | | | | 68210 | | 0.551" |
| PA | 3/8" (91) | 6 | 28001 | | | | | | 0.394" |
| R16<br>R17<br>R18<br>R19<br>R20<br>R21<br>R22<br>R420<br>S50<br>S55<br>S65 | 3/8" | 7 | | | | | 68210 | | 0.551" |
| **Pioneer** | | | | | | | | | |
| 970<br>1072<br>1073<br>1074<br>2071<br>2073<br>Holiday II | .325" | 8 | | | | | 11891 | | 0.500" |
| P-12 | 3/8" (91) | 6 | 28001 | | | | | | 0.394" |
| P-20<br>P-21<br>P-25<br>P-26<br>P-28 | .325" | 8 | | | | | 11891 | | 0.500" |
| **Poulan...** | | | | | | | | | |
| 180<br>205 | 3/8" (91) | 6 | 28004 | | | | | 952048078 | 0.407" |
| 210<br>221 | 3/8" (91) | 6 | 106114 | | | | | 952048124 | 0.394" |
| 225 | 3/8" (91) | 6 | 28004 | | | | | 952048078 | 0.407" |
| 230 | 3/8" (91) | 6 | 106114 | | | | | 952048124 | 0.394" |
| 235 | 3/8" (91) | 6 | 28004 | | | | | 952048078 | 0.407" |
| 245 | 3/8" | 7 | | | | | | 530010007 | 0.563" |



**For bearing fit up, see pages FOR 204–208.**

| Chainsaw Model | Pitch | Drive Teeth | Spur Sprocket | | Power Mate® System | | | OEM | Crankshaft Diameter |
|---|---|---|---|---|---|---|---|---|---|
| | | | Occasional User | Pro | Small 7 (SM7) | Standard 7 (SD7) | Rim | | |
| **...Poulan...** | | | | | | | | | |
| 255 | 3/8" (91) | 6 | 41569X | | | | | 952048115 | 0.394" |
| | .325" | 7 | 106656X | *41725X* | 41726X | | 11892 | | |
| 260 | 3/8" (91) | 6 | 106114 | | | | | 952048124 | 0.394" |
| 285 | .325" | 7 | *107504X* | | | | 11892 | 530048083 | 0.500" |
| 295 | 3/8" (91) | 6 | 41569X | | | | | 952048115 | 0.394" |
| | .325" | 7 | 106656X | *41725X* | 41726X | | 11892 | | |
| 305 | .325" | 7 | *107504X* | | | | 11892 | 530048083 | 0.500" |
| 306 | 3/8" | 7 | | | | | | 530010007 | 0.563" |
| 325 | .325" | 7 | | *38071X* | 29175X | | 11892 | | 0.500" |
| | | 8 | | | *24139X* | | 11891 | | |
| 330<br>335<br>336 | .325" | 7 | *107504X* | | | | 11892 | 530048083 | 0.500" |
| 375<br>395 | 3/8" | 7 | | | | | 68210 | 952048062<br>48063 | 0.500" |
| 415<br>475 | 3/8" | 7 | | | | | 68210 | 503431001 | |
| 1800 | 3/8" (91) | 6 | 28004 | | | | | 952048078 | 0.407" |
| 1950 | 3/8" (91) | 6 | 106114 | | | | | 952048124 | 0.394" |
| 2000 | 3/8" (91) | 6 | 28004 | | | | | 952048078 | 0.407" |
| 2050<br>2055<br>2075 | 3/8" (91) | 6 | 106114 | | | | | 952048124 | 0.394" |
| 2100 | 3/8" (91) | 6 | 28004 | | | | | 952048078 | 0.407" |
| 2150<br>2155<br>2175<br>2250 | 3/8" (91) | 6 | 106114 | | | | | 952048124 | 0.394" |
| 2300 | 3/8" (91) | 6 | 28004 | | | | | 952048078 | 0.407" |
| 2375 | 3/8" (91) | 6 | 106114 | | | | | 952048124 | 0.394" |
| 2400 | 3/8" (91) | 6 | 28004 | | | | | 952048078 | 0.407" |
| 2450 | 3/8" (91) | 6 | 106114 | | | | | 952048124 | 0.394" |
| 2500 | 3/8" (91) | 6 | 41569X | | | | | 952048115 | 0.394" |
| | .325" | 7 | 106656X | *41725X* | 41726X | | 11892 | | |
| 2550 | 3/8" (91) | 6 | 106114 | | | | | 952048124 | 0.394" |
| 2600 | 3/8" (91) | 6 | 41569X | | | | | 952048115 | 0.394" |
| | .325" | 7 | 106656X | *41725X* | 41726X | | 11892 | | |
| 2700 | .325" | 7 | *107504X* | | | | 11892 | 530048083 | 0.500" |
| 2750<br>2775 | 3/8" (91) | 6 | 41569X | | | | | 952048115 | 0.394" |
| | .325" | 7 | 106656X | *41725X* | 41726X | | 11892 | | |
| 2800 | .325" | 7 | *107504X* | | | | 11892 | 530048083 | 0.500" |
| 2900 | 3/8" (91) | 6 | 41569X | | | | | 952048115 | 0.394" |
| | .325" | 7 | 106656X | *41725X* | 41726X | | 11892 | | |
| 3000 | .325" | 7 | *107504X* | | | | 11892 | 530048083 | 0.500" |
| 3050 | 3/8" (91) | 6 | 41569X | | | | | 952048115 | 0.394" |
| | .325" | 7 | 106656X | *41725X* | 41726X | | 11892 | | |
| 3300 | .325" | 7 | *107504X* | | | | 11892 | 530048083 | 0.500" |
| 3314 | 3/8" (91) | 6 | 514678 | | | | | 530057905 | 0.313" |
| 3400 | 3/8" | 7 | | | | | 68210 | 952048062<br>48063 | 0.500" |
| 3416 | 3/8" (91) | 6 | 514678 | | | | | 530057905 | 0.313" |
| 3700<br>3800 | 3/8" | 7 | | | | | 68210 | 952048062<br>48063 | 0.500" |
| 3816 | 3/8" (91) | 6 | 514678 | | | | | 530057905 | 0.313" |
| 4000 | 3/8" | 7 | | | | | 68210 | 952048062<br>48063 | 0.500" |
| 4018<br>4018WT | 3/8" (91) | 6 | 514678 | | | | | 530057905 | 0.313" |
| 4200 | 3/8" | 7 | | | | | | 530010007 | 0.563" |
| 4218 | 3/8" (91) | 6 | 514678 | | | | | | 0.313" |



**For bearing fit up, see pages FOR 204–208.**

# Sprockets – Application by Saw Models

| Chainsaw Model | Pitch | Drive Teeth | Spur Sprocket | | Power Mate® System | | | OEM | Crankshaft Diameter |
|---|---|---|---|---|---|---|---|---|---|
| | | | Occasional User | Pro | Small 7 (SM7) | Standard 7 (SD7) | Rim | | |
| **...Poulan** | | | | | | | | | |
| 4620AV<br>4620AVX | .325" | 7 | 106656X | *41725X* | 41726X | | 11892 | | 0.394" |
| 4400<br>4900<br>5200<br>5400 | 3/8" | 7 | | | | | | 530010007 | 0.563" |
| 25 series (except Micro 25) | 3/8" (91) | 6 | *28006* | | | | | 952048102 | 0.438" |
| Micro 25 | 3/8" (91) | 6 | 28004 | | | | | 952048078 | 0.407" |
| P600 | 3/8" (91) | 6 | 41569X | | | | | 952048115 | 0.394" |
| | .325" | 7 | 106656X | *41725X* | 41726X | | 11892 | | |
| Patriot 1900 | 3/8" (91) | 6 | 106114 | | | | | 952048124 | 0.394" |
| S25 | 3/8" (91) | 6 | *28006* | | | | | 952048102 | 0.438" |
| Wild Thing | 3/8" (91) | 6 | 106114 | | | | | 952048124 | 0.394" |
| **RedMax** | | | | | | | | | |
| G300AV/AVS<br>G300T<br>G300TS<br>G3100TS | 3/8" (91) | 6 | 104440X | | | | | | 0.394" |
| G561AVS<br>G621AVS | 3/8" | 7 | | 32794X | *21358X* | | 18720 | | 0.394" |
| **Remington** | | | | | | | | | |
| Job Master | 3/8" (91) | 6 | *28005* | | | | | | 0.375" |
| Logger | 3/8" | 7 | | 30681X | | | 68210 | | 0.625" |
| Mighty Mite 100-800<br>Outdoorsman | 3/8" (91) | 6 | *28005* | | | | | | 0.375" |
| PL-4<br>PL-5<br>PL-55<br>SL-11<br>Woodsman | 3/8" | 7 | | 30681X | | | 68210 | | 0.625" |
| Yardmaster | 3/8" (91) | 6 | *28005* | | | | | | 0.375" |
| **Sears / Craftsman** | | | | | | | | | |
| 35093<br>35094 | 3/8" (91) | 6 | 28004 | | | | | | 0.407" |
| 35190 | 3/8" (91) | 6 | 514678 | | | | | 530057905 | 0.313" |
| 35202<br>35203<br>35205 | 3/8" (91) | 6 | 28004 | | | | | | 0.407" |
| 35235<br>35238<br>35255<br>35256 | 3/8" (91) | 6 | *28006* | | | | | | 0.438" |
| 35826<br>35829 | 3/8" | 7 | | 32794X | *21358X* | | 18720 | | 0.394" |
| 35881<br>35884 | 3/8" | 7 | | | | | 68210 | | 0.563" |
| 35885 | 3/8" | 7 | | | | | 68210 | | 0.500" |
| 41554<br>41556<br>41558 | 3/8" (91) | 6 | 29888 | | | | | | 0.394" |
| 41618 | .325" | 7 | | | | | 11892 | | 0.500" |
| 351062<br>351142<br>351161<br>351181 | 3/8" (91) | 6 | 106114 | | | | | | 0.394" |
| 351200 | .325" | 7 | *107504X* | | | | | | 0.500" |
| 352161<br>352180 | 3/8" (91) | 6 | 106114 | | | | | | 0.394" |





**For bearing fit up, see pages FOR 204–208.**

# Sprockets – Application by Saw Models

| Chainsaw Model | Pitch | Drive Teeth | Spur Sprocket | | Power Mate® System | | | OEM | Crankshaft Diameter |
|---|---|---|---|---|---|---|---|---|---|
| | | | Occasional User | Pro | Small 7 (SM7) | Standard 7 (SD7) | Rim | | |
| **Skil** | | | | | | | | | |
| 310<br>944<br>1600<br>1601<br>1602<br>1610<br>1611<br>1612<br>1613<br>1614<br>1616 | 3/8" (91) | 6 | 28001 | | | | | | 0.394" |
| 1620<br>1622<br>1624 | 3/8" (91) | 6 | 28004 | | | | | | 0.407" |
| 1632 | 3/8" | 7 | | | | | 68210 | | 0.551" |
| 1634 | 3/8" (91) | 6 | 28004 | | | | | | 0.407" |
| 1635<br>1636 | 3/8" (91) | 6 | *28006* | | | | | | 0.438" |
| 1641 | 3/8" | 7 | | | | | 68210 | | 0.500" |
| 1646 | 3/8" | 7 | | | | | 68210 | | 0.551" |
| 1700<br>1705<br>1712 | 3/8" (91) | 6 | 28001 | | | | | | 0.394" |
| **Snapper** | | | | | | | | | |
| S1634<br>S1838 | 3/8" (91) | 6 | 106114 | | | | | | 0.394" |
| **Solo** | | | | | | | | | |
| 639<br>644<br>651<br>651SP | .325" | 7 | | 111435X | | | | | 0.394" |
| 656-18 | .325" | 7 | | | | | 11892 | 350037225 | |
| 665-20<br>675-20 | 3/8" | 7 | | | | | 68210 | 3500471 | |
| **Stihl...** | | | | | | | | | |
| 07S<br>08 | .404" | 7 | | | | 10625X | 22270 | 1106-640-2025 | 0.591" |
| 009<br>010<br>011 | 1/4" | 8 | *544677X* | | | | | | 0.394" |
| | | 9 | | | *544689X* | | 543767 | | |
| | 3/8" (91) | 6 | 28016X | | | | | 1120-640-2000 | |
| 017<br>018<br>019<br>019T | 1/4" | 8 | *544676X* | | | | | | 0.394" |
| | | 9 | | | *544658X* | | 543767 | | |
| | 3/8" (91) | 6 | 100962X | | | | | 1123-640-2000 | |
| 020<br>020T | 3/8" (91) | 6 | 28016X | | | | | 1129-640-2000 | 0.394" |
| 021<br>023 | 1/4" | 8 | *544676X* | | | | | | 0.394" |
| | | 9 | | | *544658X* | | 543767 | | |
| | 3/8" (91) | 6 | 100962X | | | | | 1123-640-2000 | |
| | .325" | 7 | 106657X | | 100961X | | 11892 | 1123-007-1003 | |
| 024 (before S/N X25809074) | .325" | 7 | | 38076X | *32457X* | | 11892 | 1121-640-2003<br>1121-007-1001 | 0.394" |
| 024 (after S/N X25809074) | .325" | 7 | | 100876X | 100791X | | 11892 | | 0.394" |
| 025 | 1/4" | 8 | *544676X* | | | | | | 0.394" |
| | | 9 | | | *544658X* | | 543767 | | |
| | 3/8" (91) | 6 | 100962X | | | | | 1123-640-2000 | |
| | .325" | 7 | 106657X | | 100961X | | 11892 | 1123-007-1003 | |
| 026 (after S/N X25809074) | .325" | 7 | | 100876X | 100791X | | 11892 | 1121-007-1001 | 0.394" |
| 026 (before S/N X25809074) | .325" | 7 | | 38076X | *32457X* | | 11892 | 1121-640-2003<br>1121-007-1001 | 0.394" |
| 028<br>028 Super | .325" | 7 | | | 30384X | | 11892 | 1118-007-1004 | 0.394" |
| | 3/8" | 7 | | | 29917X | | 18720 | 1118-007-1007 | |



**For bearing fit up, see pages FOR 204–208.**

# Sprockets – Application by Saw Models

| Chainsaw Model | Pitch | Drive Teeth | Spur Sprocket | | Power Mate® System | | | OEM | Crankshaft Diameter |
|---|---|---|---|---|---|---|---|---|---|
| | | | Occasional User | Pro | Small 7 (SM7) | Standard 7 (SD7) | Rim | | |
| **...Stihl...** | | | | | | | | | |
| 029 | .325" | 7 | | | | | | | 0.394" |
| | 3/8" | 7 | | 38145X | 34162X | | 18720 | 1125-640-2000<br>1125-007-1002 | |
| 030<br>031<br>032 | 3/8" | 7 | | 32060X | | *18200X* | 68210 | 1113-640-2000<br>1110-007-1040 | 0.472" |
| 034<br>034 Super<br>036 | 3/8" | 7 | | 38145X | 34162X | | 18720 | 1125-640-2000<br>1125-007-1002 | 0.394" |
| 038<br>038 Super Magnum | 3/8" | 7 | | *32061X* | | 509604X | 68210 | 1119-642-2000 | 0.472" |
| 039 | 3/8" | 7 | | 38145X | 34162X | | 18720 | 1125-640-2000<br>1125-007-1002 | 0.394" |
| 041 (after S/N 5664891) | 3/8" | 7 | | 32060X | | *18200X* | 68210 | 1113-640-2000<br>1110-007-1040 | 0.472" |
| 041 (before S/N 5664891) | 3/8" | 7 | | | | *13916X* | 68210 | 1110-007-1017 | 0.472" |
| 044 | 3/8" | 7 | | *38471X* | | 38470X | 68210 | 1128-640-2000<br>1128-007-1000 | 0.394" |
| 045 | 3/8" | 7 | | 32063X | | | | 1115-640-2001 | 0.551" |
| 046 | 3/8" | 7 | | *38471X* | | 38470X | 68210 | 1128-640-2000<br>1128-007-1000 | 0.394" |
| 048 | 3/8" | 7 | *32064X* | | | | | 1117-640-2000 | 0.472" |
| 050<br>051 | 3/8" | 8 | | | | *22271X* | 22273 | 1111-640-2026 | 0.551" |
| | .404" | 7 | | | | *22262X* | 22270 | 1116-640-2002<br>1111-640-2025 | |
| 056S (before S/N 1093560) | 3/8" | 7 | | 32063X | | | | 1115-640-2001 | 0.551" |
| 064<br>066<br>066 Magnum | 3/8" | 7 | | | | 35464X | 68210 | 1122-007-1001 | 0.394" |
| | .404" | 7 | | | | 35460X | 22270 | 1122-007-1002 | |
| 070 | .404" | 7 | | 32669X | | *108818X or 10612X* | 22270 | 1106-640-2011 | 0.591" |
| 075<br>076 | 3/8" | 8 | | | | *22271X* | 22273 | 1111-640-2026 | 0.551" |
| | .404" | 7 | | | | *22262X* | 22270 | 1116-640-2002<br>1111-640-2025 | |
| MS170<br>MS171<br>MS180C<br>MS181<br>MS181C<br>MS210C<br>MS211<br>MS211C | 1/4" | 8 | *544676X* | | | | | | 0.394" |
| | | 9 | | | *544658X* | | 543767 | | |
| | 3/8" (91) | 6 | 100962X | | | | | 1123-640-2000 | |
| MS 200T<br>MS 201T<br>MS 201C-E | 1/4" | 8 | *554045X* | | | | | | 0.394" |
| | 3/8" (91) | 6 | 28016X | | | | | 1129-640-2000 | |
| MS 210<br>MS 230 | 1/4" | 8 | *544676X* | | | | | | 0.394" |
| | | 9 | | | *544658X* | | 543767 | | |
| | 3/8" (91) | 6 | 100962X | | | | | 1123-640-2000 | |
| | .325" | 7 | 106657X | | 100961X | | 11892 | 1123-007-1003 | |
| MS 250<br>MS 250C | 1/4" | 8 | *544676X* | | | | | | 0.394" |
| | | 9 | | | *544658X* | | 543767 | | |
| | 3/8" (91) | 6 | 100962X | | | | | 1123-640-2000 | |
| | .325" | 7 | 106657X | | 100961X | | 11892 | 1123-007-1003 | |
| MS 260<br>MS 260 Pro<br>MS 270<br>MS 270C | .325" | 7 | | 100876X | 100791X | | 11892 | 1121-007-1001 | 0.394" |
| MS 290 Farm Boss | .325" | 7 | | | | | 11892 | 1125 007 1003 | 0.394" |
| | .325 | 8 | | | | | 11891 | | |
| | 3/8" | 7 | | 38145X | 34162X | | 18720 | 1125 640 2004<br>1125 007 1041 | |
| MS 310<br>MS 311<br>MS 360 | 3/8" | 7 | | 38145X | 34162X | | 18720 | 1125-640-2000<br>1125-007-1002 | 0.394" |





**For bearing fit up, see pages FOR 204–208.**

# Sprockets – Application by Saw Models

| Chainsaw Model | Pitch | Drive Teeth | Spur Sprocket | | Power Mate® System | | | OEM | Crankshaft Diameter |
|---|---|---|---|---|---|---|---|---|---|
| | | | Occasional User | Pro | Small 7 (SM7) | Standard 7 (SD7) | Rim | | |
| **...Stihl** | | | | | | | | | |
| MS 361 | 3/8" | 7 | | *38471X* | | 38470X | 68210 | 1128-640-2000<br>1128-007-1000 | 0.394" |
| MS 362 | .325" | 9 | | | | | 13624 | 1128 007 1011 | 0.394" |
| | 3/8" | 7 | | *38471X* | | 38470X | 68210 | 1128 640 2000<br>1128 007 1000 | |
| | | 8 | | | | | 22273 | 1128 007 1001 | |
| MS 390<br>MS 391 | 3/8" | 7 | | 38145X | 34162X | | 18720 | 1125-640-2000<br>1125-007-1002 | 0.394" |
| MS 440<br>MS 460<br>MS 461 | 3/8" | 7 | | *38471X* | | 38470X | 68210 | 1128-640-2000<br>1128-007-1000 | 0.394" |
| MS 441 Magnum | 3/8" | 7 | | *38471X* | | 38470X | 68210 | 1128 640 2000<br>1128 007 1000 | 0.394" |
| | | 8 | | | | | 22273 | 1128 007 1001 | |
| MS 650<br>MS 660 | 3/8" | 7 | | | | 35464X | 68210 | 1122-007-1001 | 0.394" |
| | .404" | 7 | | | | 35460X | 22270 | 1122-007-1002 | |
| S-10 | .404" | 7 | | | | 10625X | 22270 | 1106-640-2025 | 0.591" |
| **Tanaka** | | | | | | | | | |
| ECS-3500 | 3/8" (91) | 6 | 508038X | | | | | | 0.394" |
| ECS-4000<br>ECS-415 | .325" | 7 | | | | | | | 0.394" |
| **Western Auto** | | | | | | | | | |
| 012<br>014<br>110<br>112<br>214<br>1800<br>2000 | 3/8" (91) | 6 | 28004 | | | | | | 0.407" |
| 316 | 3/8" (91) | 6 | *28006* | | | | | | 0.438" |
| 3400 | 3/8" | 7 | | | | | 68210 | | 0.500" |
| 4010 | 3/8" (91) | 6 | 28004 | | | | | | 0.407" |
| A-18 | 3/8" | 7 | | | | | 68210 | | 0.500" |
| AV16 | 3/8" (91) | 6 | *28006* | | | | | | 0.438" |
| S25DA | 3/8" (91) | 6 | 28004 | | | | | | 0.407" |
| Wizard Models | 3/8" (91) | 6 | *28006* | | | | | | 0.438" |



**For bearing fit up, see pages FOR 204–208.**

# Sprockets – Application by Oregon® Number

| Oregon Part Number | Bearing | Additional Components | Sprocket Type | Pitch – Drive Teeth | Chainsaw Model |
|---|---|---|---|---|---|
| 10612X | 37825 | | Power Mate® SD7 | .404" – 7 | **Stihl:** 070 |
| 10625X | 37431 | | Power Mate SD7 | .404" – 7 | **Stihl:** 07S, 08, S-10 |
| *13916X* | 31153 | | Power Mate SD7 | 3/8" – 7 | **Olympyk:** (Oleo-Mac) 251, 252, 254, 350 (before 1988), 355<br>**Stihl:** 041 (before S/N 5664891) |
| *16372X* | 16204 | | Power Mate SD7 | 3/8" – 8 | **Dolmar:** 122, 123, 133, 143, CA |
| *18200X* | 31153 | DC 38226 | Power Mate SD7 | 3/8" – 7 | **Stihl:** 030, 031, 032, 041 (after S/N 5664891) |
| *19117* | 105761 | | Power Mate SM7 | .325" – 7 | **Husqvarna:** 39, 44, 140, , 240S, 240SE, 240SG, 340 SE, 340SG, 444 |
| *21358X* | 37507 | W 27116 | Power Mate SM7 | 3/8" – 7 | **Echo:** CS-451, CS-452, CS-500, CS-510 EVL, CS-550, CS-610<br>**John Deere:** 50V, 55EV, 55V, 7600, Green Machine<br>**Redmax:** G561AVS, G621AVS<br>**Sears:** 35826, 35829 |
| 22132X | 21276 | DC 22148<br>NS 37986 | Power Mate SD7 | .404" – 7 | **Husqvarna:** 181, 185, 281, 285, 288, 298, 394, 394XP, 395, 395XP, 395XPG, 395XPW, 1100, 2100, 2101 |
| *22209* | 12733 | DC 22148<br>NS 37986 | Power Mate SD7 | 3/8" – 7 | **Husqvarna:** 77, 160, 163, 180, 260, 263, 280, 380, 480, L-65 |
| *22262X* | 37495 | | Power Mate SD7 | .404" – 7 | **Stihl:** 050, 051, 075, 076 |
| *22271X* | 37495 | | Power Mate SD7 | 3/8" – 8 | **Stihl:** 050, 051, 075, 076 |
| *24139X* | 11893 | | Power Mate SM7 | .325" – 8 | **Husqvarna:** 50, 51, 55, 55 Rancher, 154, 254 (before S/N 345-0001), 262 (before S/N 345-0001)<br>**Jonsered:** 490, 590<br>**Partner:** P400, P500, P545, P5000, P5100<br>**Poulan/Poulan Pro:** 325 |
| *26580X* | 13061 | | Power Mate SD7 | 3/8" – 8 | **Olympyk:** (Oleo-Mac) 260, 261, 271, 272, 280, 281, 284, 400, 460, 461, 480, 481, 482 |
| 26831 | 11893 | W 26908<br>DC 25047 | Power Mate SD7 | 3/8" – 7 | **Husqvarna:** 61 (after S/N 0510572), 266 (after S/N 0510000), 268 (after S/N 0510000), 272 (after S/N 0510000)<br>**Jonsered:** 625 (after S/N 0510123), 630 (after S/N 0510000), 630 Super (after S/N 0510000), 630 West Coast (after S/N 0510000), 670 (after S/N 0510153) |
| *27189X* | 16204 | | Power Mate SD7 | 3/8" – 7 | **Dolmar:** 112, 113, 114, 116, 116SI, 117, 119, 120, 120SI, 120 Super |
| 27958 | 28034 | | Consumer Spur | 3/8"(91) – 6 | **Homelite:** 190, Little Red, Super 2, Super 2cc, VI Super 2, XL, XL2, XL Mini |
| 27999 | 22152 | | Consumer Spur | 3/8"(91) – 6 | **Echo:** CS-280e, CS-280ep, CS-290, CS-300 EVL<br>**John Deere:** 25EV |
| 28000 | 22152 | | Consumer Spur | 3/8"(91) – 6 | **Echo:** CS-302, CS-315, CS-330 EVL, CS-351<br>**John Deere:** 28, 30, 35, 35EV, 40V |
| 28001 | 21940 | | Consumer Spur | 3/8"(91) – 6 | **Frontier:** F-35, FB-35<br>**Husqvarna:** 33, 34, 35, 37, 38<br>**Jonsered:** 36, 361, 365, 370<br>**Partner:** 22, 330, 350, 1612, 1613, 1614, 1616, Mini P, P2, P3, PA<br>**Pioneer:** P-12<br>**Skil:** 310, 944, 1600, 1601, 1602, 1610, 1611, 1612, 1613, 1614, 1616, 1700, 1705, 1712 |
| 28004 | 35184 | | Consumer Spur | 3/8"(91) – 6 | **Dayton:** 4Z022, 4Z023, 4Z109<br>**Mastercraft:** 54-5659, 54-5661, 54-5662, 55-5663<br>**Poulan/Poulan Pro:** 180, 205, 225, 235, 1800, 2000, 2100, 2300, 2400, Micro 25<br>**Sears:** 35093, 35094, 35202, 35203, 35205<br>**Skil:** 1620, 1622, 1624, 1634<br>**Western Auto:** 012, 014, 110, 112, 214, 1800, 2000, 4010, S25DA |
| *28005* | 28033 | | Consumer Spur | 3/8"(91) – 6 | **Remington:** Job Master, Mighty Mite 100-800, Outdoorsman, Yardmaster |
| *28006* | 28031 | BU 28031 | Consumer Spur | 3/8"(91) – 6 | **Allis Chalmers:** 75<br>**Dayton:** 2Z970, 4Z573<br>**Poulan/Poulan Pro:** 25 Series (except Micro 25), S25<br>**Sears:** 35235, 35238, 35255, 35256<br>**Skil:** 1635, 1636<br>**Western Auto:** Wizard Models: 316, AV16 |
| 28016X | 37511 | | Consumer Spur | 3/8"(91) – 6 | **Stihl:** 009, 010, 011, 020, 020T, MS 200 T, MS 201T, MS 201C-E |
| 28094X | 21276 | DC 22148<br>NS 37986 | Power Mate SD7 | 3/8" – 7 | **Husqvarna:** 181, 185, 281, 285, 288, 298, 394, 394XP, 395, 395XP, 395XPG, 395XPW, 1100, 2100, 2101<br>**Jonsered:** 2095 |
| *28563X* | | | Power Mate SD7 | 3/8" – 8 | **Jonsered:** 820, 830, 910, 920, 930 |
| *29105* | 105761 | | Power Mate SM7 | .325" – 7 | **Husqvarna:** 42* (before April 1994), 133, 234, 238, 242 (before S/N 3441001) |

W = Washer DC = Dust Cover NS = Neoprene Seal PD = Oil Pump Driver BU = Bushing RR = Retainer Ring

| Oregon Part Number | Bearing | Additional Components | Sprocket Type | Pitch – Drive Teeth | Chainsaw Model |
|---|---|---|---|---|---|
| 29175X | 11893 | | Power Mate® SM7 | .325" – 7 | **Husqvarna:** 50, 51, 55, 55 Rancher, 154, 254 (before S/N 345-0001), 262 (before S/N 345-0001)<br>**Jonsered:** 490, 590<br>**Partner:** P400, P500, P545, P5000, P5100<br>**Poulan/Poulan Pro:** 325 |
| *29313X* | 37507 | W 27116 | Power Mate SD7 | 3/8" – 7 | **Echo:** CS-650, CS-660<br>**John Deere:** 65EV |
| *29496X* | | | Power Mate SM7 | 3/8" – 7 | **Jonsered:** 450, 455, 510, 520, 525, 535, 2051, 2054, 2055 |
| 29888 | 21940 | W 29394 | Consumer Spur | 3/8" (91) – 6 | **Mastercraft:** 54-5720 (before April 1999), 54-5721 (before April 1999), 54-5722 (before April 1999) 54-5723 (before April 1999)<br>**McCulloch:** 365, 2000, 2010, 2012, 2014, 2016, 2116, 2316, 2318, 3000, 3200, 3210, 3214, 3216, 3505, 3516, 3805, 3818, Mac 110-140, Mini Mac, MS1432, MS1435, MS1838, PM480, Power Mac 310-340, Pro Mac 3205AV-14, Titan 35-40<br>**Montgomery Ward:** TMY24062, TMY24064, TMY24066, TMY24068<br>**Sears:** 41554, 41556, 41558 |
| 29917X | 37517 | W 37246 PD 30395 | Power Mate SM7 | 3/8" – 7 | **Stihl:** 028, 028 Super |
| 30384X | 37517 | W 37246 PD 30395 | Power Mate SM7 | .325" – 7 | **Stihl:** 028, 028 Super |
| *30672X* | 11807 | | Power Mate SD7 | 3/8" – 7 | **Homelite:** 150 AO, 350, 350HG, 350SL (with 2-5/8"clutch with 5/8"-dia. shaft), EZ, EZ 250 AO, EZ Auto, SEZ AO, SXL Mini AO, VI 123, XL76 (without brake), XL 101, XL Mini AO |
| 30681X | 11807 | | Pro Spur® | 3/8" – 7 | **Homelite:** 450, 550, Super XL 925 (with 6-shoe clutch), Super XL Auto, VI 944, VI 955, XL (800-924 Series), XL-12 (after S/N 1735838), XL Auto<br>**Remington:** PL-4, PL-5, PL-55, SL-11, Logger, Woodsman |
| *32057* | 11999 | DC 32204 | Pro Spur | 3/8" – 7 | **Husqvarna:** 61 (after S/N 0510572), 266 (after S/N 0510000), 268 (after S/N 0510000), 272 (after S/N 0510000)<br>**Jonsered:** 625 (after S/N 0510123), 630 (after S/N 0510000), 630 Super (after S/N 0510000), 630 West Coast (after S/N 0510000), 670 (after S/N 0510153) |
| 32058 | 12733 | NS 37986 | Pro Spur | 3/8" – 7 | **Husqvarna:** 77, 160, 163, 180, 260, 263, 280, 380, 480, L-65 |
| 32060X | 31153 | W 17614 | Pro Spur | 3/8" – 7 | **Stihl:** 030, 031, 032, 041 (after S/N 5664891) |
| *32061X* | 37514 | DC 35679 | Pro Spur | 3/8" – 7 | **Stihl:** 038, 038 Super Magnum |
| 32063X | 25518 | | Pro Spur | 3/8" – 7 | **Stihl:** 045, 056S (before S/N 10963560) |
| *32064X* | 37514 | | Pro Spur | 3/8" – 7 | **Stihl:** 048 |
| *32071* | 11999 | DC 32204 | Pro Spur | 3/8" – 7 | **Husqvarna:** 61 (after S/N 0510572), 266 (after S/N 0510000), 268 (after S/N 0510000), 272 (after S/N 0510000)<br>**Jonsered:** 625 (after S/N 0510123), 630 (after S/N 0510000), 630 Super (after S/N 0510000), 630 West Coast (after S/N 0510000), 670 (after S/N 0510153) |
| *32457X* | 37325 | | Power Mate SM7 | .325" – 7 | **Stihl:** 024, 026 (before S/N X25809074) |
| 32669X | 37825 | | Pro Spur | .404" – 7 | **Stihl:** 070 |
| *32782X* | | W 10585 | Pro Spur | 3/8" – 7 | **Echo:** CS-60, CS-60S |
| 32786X | 11893 | W 18461 | Pro Spur | 3/8" – 7 | **McCulloch:** 515, 605, 610, 650, 655, 700, 805, 850, 855, Mac 1-10 through 10-10, Pro Mac 55, Pro Mac 60, SP-70, Timber Bear<br>**Mastercraft:** 54-5723 (before April 1999)<br>**Montgomery Ward:** TMY24084, TMY24086 |
| 32794X | 37507 | | Pro Spur | 3/8" – 7 | **Echo:** CS-451, CS-452, CS-500, CS-510 EVL, CS-550, CS-610<br>**John Deere:** 50V, 55EV, 55V, 7600, Green Machine<br>**Redmax:** G561AVS, G621AVS<br>**Sears:** 35826, 35829 |
| *33807X* | 37501 or 37504 | | Power Mate SM7 | .325" – 7 | **Jonsered:** 450, 455, 510, 520, 525, 535 (models 450-535 use bearing #37501); 2051, 2054, 2055 (models 2051-2055 use bearing # 37504) |
| 34162X | 37325 | | Power Mate SM7 | 3/8" – 7 | **Stihl:** 029, 034, 034 Super, 036, 039, MS 290, MS310, MS 360, MS 390 |
| 34425X | 11893 | | Power Mate SM7 | 3/8" – 7 | **Husqvarna:** 50, 51, 55, 55 Rancher, 154, 254 (before S/N 345-0001), 262 (before S/N 345-0001)<br>**Partner:** P400, P500, P545, P5000, P5100 |
| *34474X* | 31153 | | Power Mate SM7 | .325" – 7 | **Echo:** CS-4000, CS-4500, CS-4600, CS-5000, CS-5500 |
| 35460X | 37504 | W 37246 | Power Mate SD7 | .404" – 7 | **Stihl:** 064, 066, 066 Magnum, MS 650, MS 660 |
| 35464X | 37504 | W 37246 | Power Mate SD7 | 3/8" – 7 | **Stihl:** 064, 066, MS 066 Magnum, MS 650, MS 660 |

W = Washer DC = Dust Cover NS = Neoprene Seal PD = Oil Pump Driver BU = Bushing RR = Retainer Ring

# Sprockets – Application by Oregon® Number

| Oregon Part Number | Bearing | Additional Components | Sprocket Type | Pitch – Drive Teeth | Chainsaw Model |
|---|---|---|---|---|---|
| 35641X | 11893 | W 35651 | Power Mate® SM7 | .325" – 7 | **Husqvarna:** 40, 45, 49<br>**Jonsered:** 410, 420, 425, 435, 2041, 2045, 2050<br>**Partner:** 400, 410, 450, 460, 490, 510 |
| *36868X* | 11893 | | Power Mate SD7 | 3/8" – 7 | **Husqvarna:** 50, 51, 55, 55 Rancher, 154, 254 (before S/N 345-0001), 262 (before S/N 345-0001)<br>**Jonsered:** 490, 590<br>**Partner:** P400, P500, P545, P5000, P5100 |
| *37969X* | 21276 | DC 22148 | Power Mate SD7 | .404" – 7 | **Husqvarna:** 3120XP, Jungle 3120 |
| *38071X* | 11893 | | Pro Spur® | .325" – 8 | **Husqvarna:** 50, 51, 55, 55 Rancher, 154, 254 (before S/N 345-0001), 262XP (before S/N 345-1001)<br>**Jonsered:** 490, 590<br>**Partner:** P400, P500, P545, P5000, P5100<br>**Poulan/Poulan Pro:** 325 |
| 38075X | 16204 | W 26984 | Pro Spur | 3/8" – 7 | **Dolmar:** 112, 113, 114, 116, 116SI, 117, 119, 120, 120SI, 120 Super |
| 38076X | 37325 | W 37246 | Pro Spur | .325" – 7 | **Stihl:** 024, 026 (before S/N X25809074) |
| 38145X | 37325 | | Pro Spur | 3/8" – 7 | **Stihl:** 029, 034, 034 Super, 036, 039, MS290, MS310, MS311, MS360, MS390, MS391 |
| 38470X | 37504 | | Power Mate SD7 | 3/8" – 7 | **Stihl:** 044, 046, MS361, MS362, MS440, MS441, MS460, MS 461 |
| *38471X* | 37504 | | Pro Spur | 3/8" – 7 | **Stihl:** 044, 046, MS361, MS362, MS440, MS441, MS460, MS 461 |
| *38824X* | 31153 | | Power Mate SM7 | 3/8" – 7 | **Dolmar:** 109, 110, 111, 115<br>**Makita:** DCS 430, DCS 520i, DCS 4300, DCS 5200i |
| 40068 | 105761 | | Power Mate SM7 | .325" – 7 | **Husqvarna:** 42, 242 (after S/N 3441001), 246 |
| 41569X | 37325 | | Consumer Spur | 3/8" (91) – 6 | **Husqvarna:** 36, 41, 136, 137, 235E, 236, 240E<br>**Jonsered:** 2035, 2036, 2040, CS2137, CS2234, CS2238<br>**Partner:** 365, 405<br>**Poulan/Poulan Pro:** 295, 2500, 2600, 2750, 2775, 2900, 3050, P600 |
| *41725X* | 37325 | | Pro Spur | .325" – 7 | **Husqvarna:** 36, 41, 136, 137, 235E, 236, 240E<br>**Jonsered:** 2035, 2036, 2040, CS2137<br>**Partner:** 365, 405<br>**Poulan/Poulan Pro:** 255, 295, 2500, 2600, 2750, 2775, 2900, 3050, 4620AV, 4620AVX, P600 |
| 41726X | 37325 | | Power Mate SM7 | .325" – 7 | **Husqvarna:** 36, 41, 136, 137, 235E, 236, 240E<br>**Jonsered:** 2035, 2036, 2040, CS2137<br>**Partner:** 365, 405<br>**Poulan/Poulan Pro:** 295, 2500, 2600, 2750, 2775, 2900, 3050, 4620AV, 4620AVX, P600 |
| *68209X* | 11893 | W 11513 | Power Mate SD7 | 3/8" – 7 | **Mastercraft:** 54-5723 (before April 1999)<br>**McCulloch:** 515, 605, 610, 650, 655, 700, 805, 850, 855, Mac 1-10 thru 10-10, Pro Mac 55, Pro Mac 60, SP-70, Timber Bear<br>**Montgomery Ward:** TMY24084, TMY24086 |
| 100757 | 11893 | | Power Mate SD7 | 3/8" – 7 | **Husqvarna:** 254 (after S/N 345-0001), 257 (after S/N 314-0001), 262XP (after S/N 345-0001)<br>**John Deere:** CS56, CS62<br>**Olympyk:** (Oleo Mac) 956, 962 |
| 100758X | 11893 | PD 103072 | Power Mate SM7 | .325" – 7 | **Efco:** 156, 165<br>**Husqvarna:** 254 (after S/N 345-0001), 257(after S/N 314-0001), 262XP (after S/N 345-0001)<br>**John Deere:** CS56, CS62<br>**Olympyk:** (Oleo Mac) 956, 962 |
| 100791X | 37325 | RR 30398 | Power Mate SM7 | .325" – 7 | **Stihl:** 024, 026 (after S/N X25809074), MS 260, MS 260 Pro, MS 270, MS 270C |
| 100876X | 37325 | W 37246 | Pro Spur | .325" – 7 | **Stihl:** 024, 026 (after S/N X25809074), MS 260, MS260 Pro MS, 270, MS 270C |
| 100961X | 37325 | | Power Mate SM7 | .325" – 7 | **Stihl:** 025, MS 210, MS 250, MS 250C |
| 100962X | 37325 | | Consumer Spur | 3/8" (91) – 6 | **Stihl:** 017, 018, 019, 019T, 021, 023, 025, MS 170, MS 171, MS 180C, MS 181, MS 181C, MS 210, MS 211, MS 211C, MS 230, MS 250, MS 250C |
| 102469 | 11999 | W 26908<br>DC 25047 | Power Mate SD7 | 3/8" – 7 | **Husqvarna:** 61 (before S/N 0510572), 66, 162, 266, (before S/N 0510000), 268 (before S/N 0510000), 272 (before S/N 0510000)<br>**Jonsered:** 625 (before S/N 0510123), 630 (before S/N 0510000), 630 Super (before S/N 0510000), 630 West Coast (before S/N 0510000), 670 (before S/N 0510153) |
| 104102X | 21539 | | Consumer Spur | 3/8" (91) – 6 | **Alpina:** P-34 |
| 104440X | 37325 | | Consumer Spur | 3/8" (91) – 6 | **Olympyk:** 931<br>**Redmax:** G300T, G300TS, G3100TS, G300AV/AVS |

W = Washer DC = Dust Cover NS = Neoprene Seal PD = Oil Pump Driver BU = Bushing RR = Retainer Ring

| Oregon Part Number | Bearing | Additional Components | Sprocket Type | Pitch – Drive Teeth | Chainsaw Model |
|---|---|---|---|---|---|
| 105772X | 37501 | | Power Mate® SD7 | 3/8" – 7 | **Husqvarna:** 362, 365, 371, 372 |
| 106068X | 31153 | | Consumer Spur | .325" – 7 | **Olympyk:** 938, 941, 942, 945, 946, 951 |
| 106114 | 37325 | | Consumer Spur | 3/8" (91) – 6 | **Partner:** 351<br>**Poulan:** 210, 221, 230, 260, 1950, 2050, 2055, 2075, 2150, 2155, 2175, 2250, 2375, 2450, 2550, Patriot 1900, Wildthing<br>**Sears:** 351062, 351142, 351161, 351181, 352161, 352180<br>**Snapper:** S1634, S1838 |
| 106593X | 37501 | | Power Mate SD7 | 3/8" – 7 | **Husqvarna:** 362, 365, 371, 372, 372XP, 570, 575XP, 576XP<br>**Jonsered:** 2065, 2071, CS2165, CS2166, CS2171, CS2172 |
| 106656X | 37325 | | Consumer Spur | .325" – 7 | **Husqvarna:** 36, 41, 136, 137, 235E, 236, 240E<br>**Jonsered:** 2035, 2036, 2040, CS2137<br>**Poulan:** 295, 2500, 2600, 2750, 2775, 2900, 3050, 4620, 4620AV, 4620AVX, P600<br>**Partner:** 365, 405 |
| 106657X | 37325 | | Consumer Spur | .325" – 7 | **Stihl:** 017, 018, 019, 021, 023, 025, MS 210, MS 230, MS 250, MS 250C |
| 106658X | 11893 | W 35651 | Consumer Spur | .325" – 7 | **Husqvarna:** 40, 45, 49<br>**Jonsered:** 410, 420, 425, 435, 2041, 2045, 2050 |
| 106906X | 37511 | | Consumer Spur | 3/8" (91) – 6 | **Echo:** CS-300, CS-301, CS-303T, CS-305, CS-306, CS-330MX4, CS-330T, CS-340, CS-341, CS-345, CS-346, CS-355T, CS-360T, CS-361P, CS-3000, CS-3350, CS-3400, CS-3450 |
| *107504X* | 11893 | | Consumer Spur | .325" – 7 | **Poulan:** 285, 305, 330, 335, 336, 2700, 2800, 3000, 3300<br>**Sears:** 251200 |
| 108215X | 11893 | | Power Mate SM7 | .325" – 7 | **Husqvarna:** 346, 346XP, 346XPG, 351, 353, 353E-Tech, 355, 355EPA, 357, 357EPA, 357XP, 359, 359EPA, 445, 445e, 450, 450e, 450 Rancher<br>**Jonsered:** CS2141, CS2145, CS2149, CS2150, CS2152, CS2153, CS2156, CS2159, CS2245, CS2250, CS2250s |
| 108308X | 11893 | | Pro Spur® | .325" – 7 | **Husqvarna:** 340, 340e, 345, 345e, 351, 355, 355EPA, 445, 445e, 450, 450e, 450 Rancher<br>**Jonsered:** CS2141, CS2145, CS2150, CS2152, CS2153, CS2245, CS2250, CS2250s |
| 108565X | 11893 | | Power Mate SD7 | 3/8" – 7 | **Husqvarna:** 355, 355EPA, 357, 357EPA, 357XP, 359, 359EPA<br>**Jonsered:** CS2156, CS2159 |
| 108567 | 108817 | | Consumer Spur | 3/8" (91) – 6 | **Homelite:** 20, 23, 27, PS-33, 2500, 2700, 3300, 3350, 3800, 3816, 3850, i3850b, i4150b, i4550b, Timberman, UT10901, UT10910, UT10926 |
| *108818X* | 37825 | | Power Mate SD7 | .404" – 7 | **Stihl:** 070 |
| *111177X* | 31153 | | Power Mate SM7 | .325" – 7 | **John Deere:** CS46, CS52<br>**Olympyk:** (Oleo-Mac) 938, 941, 942, 945, 946, 951 |
| *111178X* | 31153 | | Power Mate SM7 | .325" – 7 | **Cub Cadet:** CS5018, CS5220<br>**Efco:** 152, MT 5200<br>**Olympyk:** (Oleo-Mac) 947, 952 |
| 111185X | 37507 | | Pro Spur | .325" – 7 | **Alpina:** 400, 450, 500 |
| 111435X | 37511 | | Pro Spur | .325" – 7 | **Solo:** 639, 644, 651, 651SP |
| *111450X* | 16204 | | Power Mate SD7 | 3/8" – 7 | **Dolmar:** PS6000i, PS6800i<br>**Makita:** DCS6000i, DCS6800i |
| 111590X | 37501 | | Power Mate SD7 | 3/8" – 7 | **Husqvarna:** 385XP, 385XPG, 390XP, 390XPW<br>**Jonsered:** CS2188 |
| 112130 | 22152 | | Consumer Spur | 3/8" (91) – 6 | **Dolmar:** PS-34, PS-45<br>**Makita:** DCS-34 |
| 112135 | 21940 | | Consumer Spur | 3/8" (91) – 6 | **Dolmar:** PS-340, PS-341<br>**Makita:** DCS-340, DCS-341 |
| 508038X | 37325 | | Consumer Spur | 3/8" (91) – 6 | **Tanaka:** ECS-3500 |
| 509604X | 37514 | DC 35679 | Power Mate SD7 | 3/8" – 7 | **Stihl:** 038, 038 Super Magnum |
| 513442 | 37509 | | Power Mate SM7 | .325" – 7 | **Echo:** CS-400 EVL, CS-440 EVL, CS-3600, CS-3900, CS-4400, CS-5100 (after S/N 134504)<br>**John Deere:** 45 |
| *513444* | 37509 | | Pro Spur | .325" – 7 | **Echo:** CS-400 EVL, CS-440 EVL, CS-3600, CS-3900, CS-4400, CS-5100 (after S/N 134504)<br>**John Deere:** 45 |
| 513445 | 37325 | | Pro Spur | .325" – 7 | **Husqvarna:** 141, 142 |

W = Washer DC = Dust Cover NS = Neoprene Seal PD = Oil Pump Driver BU = Bushing RR = Retainer Ring

# Sprockets – Application by Oregon® Number

| Oregon Part Number | Bearing | Additional Components | Sprocket Type | Pitch – Drive Teeth | Chainsaw Model |
|---|---|---|---|---|---|
| 513446 | 37325 | | Consumer Spur | 3/8" (91) – 6 | **Husqvarna:** 141, 142 |
| *513447* | 37325 | | Power Mate® SM7 | .325" – 7 | **Husqvarna:** 141, 142 |
| 513470X | 11893 | | Power Mate SM7 | 3/8" – 7 | **Husqvarna:** 455, 455 Rancher, 460, 460 Rancher |
| 513471X | 11893 | | Pro Spur® | .325" – 7 | **Husqvarna:** 455, 455 Rancher, 460, 460 Rancher |
| 513472X | 11893 | | Power Mate SM7 | .325" – 7 | **Husqvarna:** 455, 455 Rancher, 460, 460 Rancher |
| 514678 | 108817 | | Consumer Spur | 3/8" (91) – 6 | **Poulan:** 3314, 3416, 3816, 4018, 4018WT, 4218<br>**Sears:** 35190 |
| 522963X | 21940 | | Consumer Spur | 3/8" (91) – 6 | **Husqvarna:** 334T, 335, 335XP, 336, 338, 338XPT, 339, 339XP |
| 523524X | 37511 | | Consumer Spur | 3/8" (91) – 6 | **Echo:** CS-370, CS-400 |
| 524076 | 37325 | | Consumer Spur | .325" – 7 | **Homelite:** 20, 23, 27, 2500, 2700, 3300, 3350, 3800, 3816, 3850, 4550, i3850b, i4150b, i4550b, PS-33, Timberman, UT10901, UT10910, UT10926 |
| *544531* | | | Consumer Spur | 1/4" – 8 | **Husqvarna:** 33, 34, 35, 37, 38 |
| *544554* | 22152 | | Consumer Spur | 1/4" – 8 | **Echo:** CS-302, CS-315, CS-330EVL, CS-351 |
| *544555* | 22152 | | Consumer Spur | 1/4" – 8 | **Echo:** CS-280e, CS-280ep, CS-290, CS-300EVL |
| *544658X* | | | Power Mate SM7 | 1/4" – 9 | **Stihl:** 017, 018, 019, 019T, 021, 023, 025, MS 170, MS 171, MS 180C, MS 181, MS 181C, MS 210, MS 211, MS 211C, MS 230, MS 250, MS 250C |
| *544675X* | | | Consumer Spur | 1/4" – 8 | **Echo:** CS-300, CS-301, CS-303T, CS-305, CS-306, CS-330MX4, CS-330T, CS-340, CS-341, CS-345, CS-346, CS-355T, CS-360T, CS-361P, CS-3000, CS-3350, CS-3400, CS-3450 |
| *544676X* | 37325 | | Consumer Spur | 1/4" – 8 | **Stihl:** 017, 018, 019, 019T, 021, 023, 025, MS 170, MS 171, MS 180C, MS 181, MS 181C, MS 210C MS 210, MS 211, MS 211C, MS 230, MS 250, MS 250C |
| *544677X* | | | Consumer Spur | 1/4" – 8 | **Stihl:** 009, 010, 011 |
| *544678X* | 37511 | | Consumer Spur | 1/4" – 8 | **Husqvarna:** 334T, 335, 335XPT, 336, 338XPT, 339XP |
| *544679X* | 37507 | | Power Mate SM7 | 1/4" – 9 | **Echo:** CS-300, CS-301, CS-303T, CS-305, CS-306, CS-330MX4, CS-330T, CS-340, CS-341, CS-345, CS-346, CS-355T, CS-360T, CS-361P, CS-3000, CS-3350, CS-3400, CS-3450 |
| *544680X* | | | Power Mate SM7 | 1/4" – 9 | **Husqvarna:** 33, 34, 35, 37, 38 |
| *544689X* | | | Power Mate SM7 | 1/4" – 9 | **Stihl:** 009, 010, 011 |
| 546622 | | | Consumer Spur | 3/8" – 6 | **Oregon:** CS250-S6, CS250-E6, CS250-A6, CS300, CS300-A6, CS300-E6 |
| *552412* | 37325 | | Power Mate SM7 | 1/4" – 9 | **Husqvarna:** 36, 41, 136, 137, 141, 235E, 240E<br>**Poulan:** P600 |
| *552665* | 37325 | | Consumer Spur | 1/4" – 8 | **Husqvarna:** 36, 41, 136, 137, 141, 235E, 236, 240E<br>**Poulan:** P600 |
| 553995 | 31153 | | Consumer Spur | 3/8" (91) – 6 | **Husqvarna:** 435, 435E, 440, 440E |
| *554045X* | 37511 | | Consumer Spur | 1/4" – 8 | **Stihl:** MS200T, MS 201T, MS 201C-E |
| 570964 | | | Consumer Spur | 3/8" (91) – 6 | **Oregon:** CS1500 |
| 571043 | | | Consumer Spur | 3/8" (90) – 7 | **Oregon:** PS250 |
| 577331 | 31153 | | Pro Spur | .325" – 7 | **Husqvarna:** 435, 435E, 440, 440E<br>**Jonsered:** CS2240, CS2240s |
| 582642 | 31153 | | Power Mate SM7 | .325" – 7 | **Husqvarna:** 435, 435E, 440, 440E<br>**Jonsered:** CS2240, CS2240s |

W = Washer DC = Dust Cover NS = Neoprene Seal PD = Oil Pump Driver BU = Bushing RR = Retainer Ring

## Rim & Spur Sprocket Troubleshooting Guide

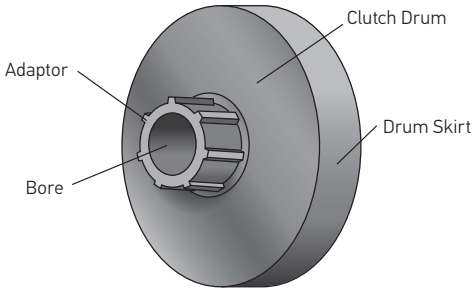


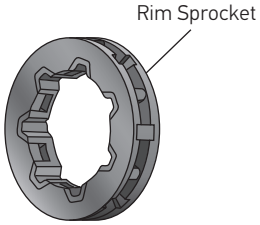




**Power Mate® Sprocket**
(front view)

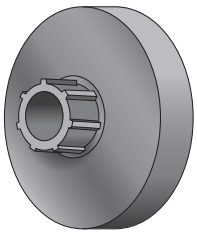

**Power Mate Sprocket**
(inside view)

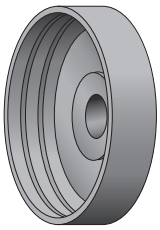

**Oregon® Rim**

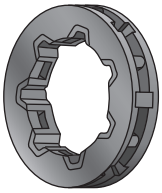

**Power Mate Rim Sprocket System**

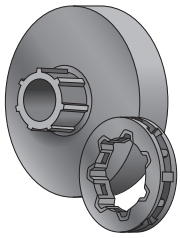

**Spur Sprocket**

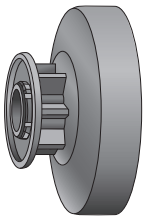

## Basic Sprocket Maintenance

**Rims and Spur Sprocket**
Visually inspect daily

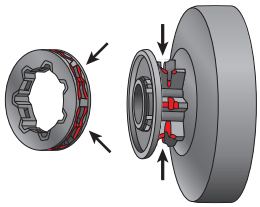

**Power Mate Sprockets**
Visually inspect daily and before use

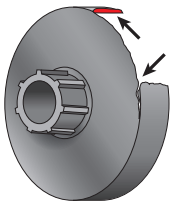

**Bar and Chain Oil**
Fill before use and when reservoir is empty

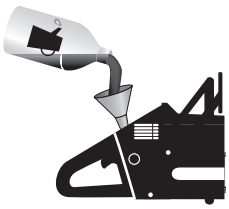

**Sprocket Grease**
Apply grease to sprocket once a week

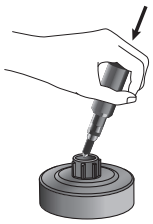

## Typical Drum Stress

**Broken/cracked skirt**

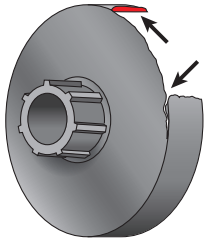

**Cracked oil pump lug**

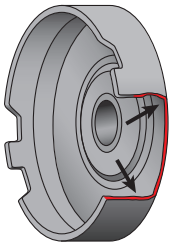

**Worn inner diameter**

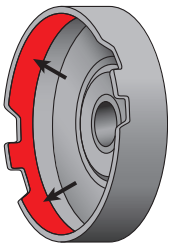

**Worn clutch, worn inner diameter**

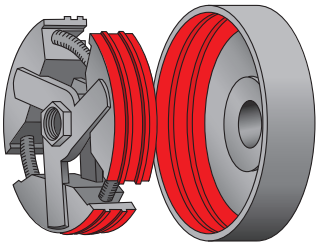

Result
Check daily for cracks, splits, or excessive wear in the sprocket clutch drum

Solution
If the drum is cracked, split, or broken, as shown, replace the drum immediately with a new one.

# Sprockets — Troubleshooting

## Rim & Spur Sprocket Troubleshooting Guide

### Spur Sprocket Damage

Cause
This condition can occur when cutting chain drive links wear through the case-hardened teeth

Result
Cutting chain can be ruined by damaged spurs

Solution
If spur sprocket teeth look like this replace immediately

### Rim Damage

Cause
Wear can occur under normal conditions. However, check for excessive rim wear and look for wear on outer diameter

Result
The reduction in diameter can also allow chain drive links to damage the sprocket adaptor

Solution
Replace rim after two chains

### Severe Rim Damage

Solution
Do not fit cutting chain to rims that are severely worn. Serious chain damage will result and the rim may break

4

### Worn Spur

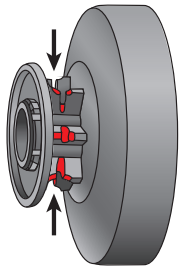

### Outer Wear

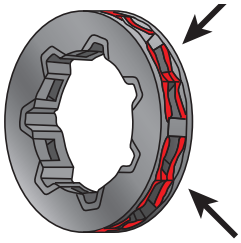

### Broken Rim

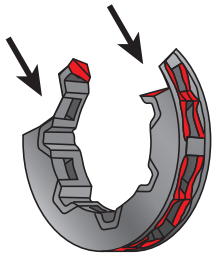

## Chain Brake Stress

### Skirt Wear/Brake Band

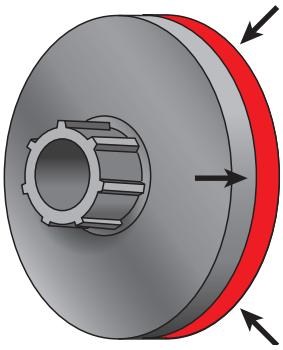

### Wear/Adaptor Damage

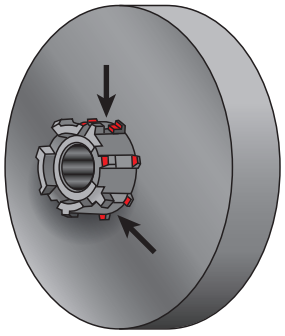

### Worn Rim and Adaptor Spline

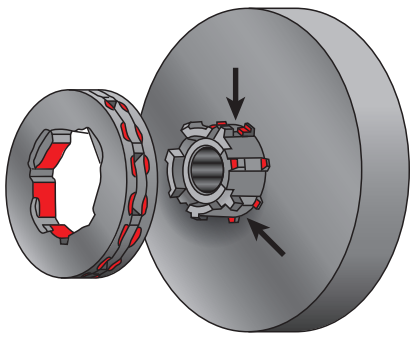

Result
An overly tightened strap around the drum will cause the strap to rub against the clutch drum which will overheat and soften the metal causing potential drum failure

Solution
If your chainsaw has a chain brake, always check the brake to make sure it stops the rotating chain when activated. Make certain that the brake strap around the drum is not too tight

# CHAINSAW PARTS


Screnches . . . . . FOR 214

Air Filters . . . . . FOR 215–219

Electrical Parts . . . . . FOR 219–221

Fasteners . . . . . FOR 221

Chain Adjusters . . . . . FOR 221–222

Grinding Wheels. . . . . FOR 223

Fuel Line, Primer Bulbs and
Fuel Filters. . . . . FOR 223–228

Starter Pulleys and Springs. . . . . FOR 228

# Chainsaw Parts

## Screnches

| | Driver Type: | ⊖ | ⊖ | ⊖ | ⊖ | ⊖ | ⊖ | ✱ | ⊖ | ⊖ | ⊖ | ⊖ |
|---|---|---|---|---|---|---|---|---|---|---|---|---|
| Dimensions (mm) | S1 x S2 | 13 x 19 | 13 x 19 | 13 x 19 | 19 x 10 | 16 x 13 | 19 x 17 | 19 | 19 x 14 | 21 x 17 | 15 x 19 | 16 x 11 |
| | A1 | 25 | 21 | 33 | 35 | 35 | 27 | 12 | 35 | 30 | 28 | 40 |
| | L2 | 175 | 177 | 171 | 172 | 172 | 177 | 177 | 175 | 172 | 177 | 177 |
| | L1 | 52 | 44 | 68 | 70 | 72 | 57 | 51 | 70 | 60 | 56 | 80 |
| | Oregon® No's: | 57-005 | 57-017 | 57-016 | 57-003 | 57-002 | 57-008 | 57-019 | 57-006 | 57-010 | 57-014 | 57-001 |
| | Dolmar | | ✓ | | | | ✓ | | | | | |
| | Echo | | ✓ | ✓ | ✓ | | | | ✓ | | | |
| | Homelite | | | | | | | | | | | ✓ |
| | Husqvarna | ✓ | ✓ | ✓ | | ✓ | | | | | | |
| | John Deere | | | ✓ | ✓ | ✓ | | | ✓ | | | |
| | Jonsered | ✓ | ✓ | | | ✓ | | | | | ✓ | |
| | McCulloch | ✓ | | | | | | | | | | ✓ |
| | Efco / Oleo-Mac | | | ✓ | ✓ | | ✓ | | | | | |
| | Partner | ✓ | ✓ | | | ✓ | | | | | | |
| | Pioneer | | | | | | | | ✓ | | | |
| | Poulan | | ✓ | | | | | | ✓ | | ✓ | |
| | Shindaiwa | ✓ | ✓ | | ✓ | | | | | | | |
| | Stihl | | ✓ | ✓ | | | ✓ | ✓ | | ✓ | | |

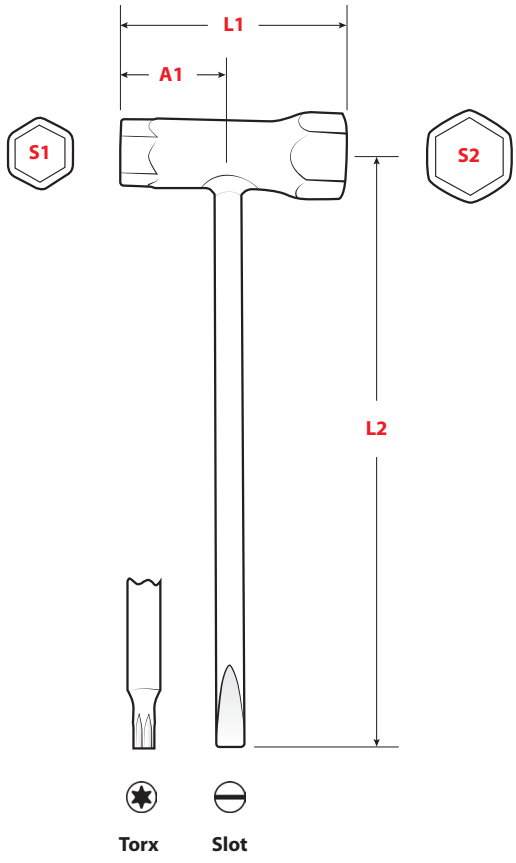

| OREGON | Replaces | Description |
|---|---|---|

## Air Filters

| | | | |
|---|---|---|---|
| **30-618** | Echo 130310-39730 | **Air Filter** - NEW<br>Fits Echo CS3500, CS4200, & CS420<br>Height: 2-1/4", outer diameter: 2-1/2", inner diameter: 1-3/4" | |
| **30-621** | Echo A226-000291 | **Air Filter** - NEW<br>Echo CS350TES | |
| **30-625** | Echo 13031038331 | **Air Filter** - NEW<br>Fits Echo CS440, CS4400, CS450, CS510, CS520, & CS530<br>Height: 1-3/8", outer diameter: 2-1/2", inner diameter: 1-3/4" | |
| **30-620** | Echo P021-016371 | **Air Filter** - NEW<br>Fits Echo CS600 | |
| **30-619** | Echo A226-000070 | **Air Filter** - NEW<br>Fits Echo CS6702 & CS680S | |
| **55-207** | Homelite A65178 | **Air Filter – Felt**<br>For chainsaws<br>Fits EZ-Automatic<br>Length: 4", width: 2-7/8" | |
| **55-211** | Homelite 63589-A | **Air Filter**<br>For chainsaws<br>Fits model SXL, XL12, XL15, XL400, XL500, & UT10618A<br>Length: 4", width: 3-1/2" | |
| **55-610** | Homelite 69141<br>Homelite D92702B<br>Homelite A24779 | **Foam Air Filter**<br>Fits models Super 2, XL2, XL, CSB3012, & LX30 Bandit<br>Diameter: 1-7/8", thickness: 1/2"<br>Pre-oiled foam air filter - (Previously 55-228) | |
| **30-124** | Husqvarna 503 44 72-03 | **Air Filter**<br>Fits 261, 262, 268, 272, & 394 chainsaws | |
| **30-148** | Husqvarna 501 80 71-05 | **Air Filter**<br>Fits 61, 66, 266, 281, & 288 chainsaws | |

# Chainsaw Parts

| OREGON | Replaces | Description |
|---|---|---|

## Air Filters

| | | | |
|---|---|---|---|
| **30-622** | Husqvarna 505126306 | **Air Filter** - NEW<br>Fits Husqvarna 555, 560XP, CS2258, & CS2260<br>Length: 3", width: 2-1/2", height: 1-3/8" | |
| **30-623** | Husqvarna 522675003 | **Air Filter** - NEW<br>Fits Husqvarna 562XP<br>Length: 3-1/8", width: 2-9/16", height: 2-1/2" | |
| **30-634** | Husqvarna 544 08 08-02 | **Air Filter** - NEW<br>Fits Husqvarna 445, 445E, 450, & 450E chainsaw | |
| **30-631** | Husqvarna 544181602 | **Air Filter** - NEW<br>Fits Husqvarna K750<br>Length: 5", width: 4-1/2", height: 1-3/8" | 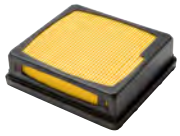 |
| **30-627** | Husqvarna 544181602 | **Air Filter** - NEW<br>Fits Husqvarna K760<br>Length: 4-7/8", width: 4-1/2", height: 2-1/2" | |
| **30-645** | Husqvarna, 503 81 45-01 | **Air Filter** - NEW<br>Fits Husqvarna 362, 362EPA, 362 Special, 362XP, 365, 365EPA, 365 Special, 365 Special EPA, 371, 371EPA, 372, 372EPA, & 372XPW chainsaws | |
| **30-641** | Husqvarna 530029811 | **Air Filter** - NEW<br>Fits Husqvarna 36, 41, 136, 137, 141, & 142 chainsaws<br>Length: 3-1/8", width: 2-11/16", height: 7/8" | |
| **30-630** | Husqvarna 575269103 | **Air Filter** - NEW<br>Fits Husqvarna 362, 365, 371, & 372<br>Length: 3-1/2", width: 2-7/8" | |
| **30-637** | Husqvarna 501 80 71-05 | **Air Filter** - NEW<br>Fits Husqvarna 61, 181, 266, 281, & 288 | |
| **30-633** | Husqvarna 537024003 | **Air Filter** - NEW<br>Fits Husqvarna 340, 345, 346 XP, 350, 351, & 353 chainsaws | |

| OREGON | Replaces | Description | |
|---|---|---|---|

## Air Filters

| | | | |
|---|---|---|---|
| **30-648** | Husqvarna 503 89 82-01 | **Air Filter** - NEW<br>Fits Husqvarna 51/55<br>Length: 4", width: 3-1/2", height: 2" | |
| **55-218** | McCulloch 214224<br>McCulloch 61460<br>McCulloch 216905 | **Air Filter**<br>For chainsaws<br>Fits 110, 120, 130, & Eager Beaver<br>Diameter: 2", thickness: 7/8" | |
| **55-212** | McCulloch 69922<br>McCulloch 92420 | **Air Filter**<br>For chainsaws<br>Fits 10-10<br>Length: 4-3/8", width: 4-1/4" | |
| **55-214** | McCulloch 95213<br>McCulloch 214226 | **Air Filter**<br>For chainsaws<br>Fits 600 & Eager Beaver 3.7<br>Length: 4-3/8", width: 4-1/4" | |
| **55-226** | Poulan 24548 | **Air Filter**<br>For chainsaws<br>Fits 3400 & 3700<br>Length: 3-7/8", width: 2-5/8", height: 1" | |
| **55-515** | Poulan 530-37793 | **Foam Air Filter**<br>Fits gas chainsaw models 1950, 2050, 2075, 210, 2150, 2175, 2250, 230, 2450, 2550, & 260<br>Pre-oiled air filter | |
| **55-612** | Pouan 23369 | **Foam Air Filter**<br>For chainsaws<br>Fits model 25<br>Length: 3-3/8", width: 1-5/8", height: 1-1/4"<br>Pre-oiled foam - (previously 55-223) | |
| **55-613** | Poulan 23791 | **Foam Air Filter**<br>For chainsaws<br>Fits model MICRO XXV, 18, 20, & 2300<br>Length: 2-5/8", width: 1-1/2", height: 1"<br>Pre-oiled foam – (previously 55-224) | |
| **30-636** | Stihl 1127 120 1621 | **Air Filter** - NEW<br>Fits Stihl 029, 039, MS290, & MS310<br>Length: 4-5/8", width: 1-1/2", height: 2-5/8" | |

# Chainsaw Parts

| OREGON | Replaces | Description | |
|---|---|---|---|

## Air Filters

| | | | |
|---|---|---|---|
| **30-642** | Stihl 1123 120 1612 | **Air Filter** - NEW<br>Fits Stihl MS210, MS230, & MS250 | |
| **30-639** | Stihl 1125 120 1626 | **Air Filter** - NEW<br>Fits Stihl 034, 036, MS340, & MS360 | |
| **30-646** | Stihl 1119-120-1610 | **Air Filter** - NEW<br>Fits Stihl 038, C44-50, & MS380 | |
| **30-632** | Stihl 1135 120 1600 | **Air Filter** - NEW<br>Fits Stihl MS341 & MS361<br>Length: 4-5/8", width: 2-13/16", height: 1-11/16" | |
| **30-628** | Stihl 4224-141-0300 | **Air Filter** - NEW<br>Stihl TS700 & TS800<br>Length: 5-1/2" | |
| **30-653** | Stihl 0000-141-0300 | **Pre-Air Filter, Heavy Duty** - NEW<br>Fits Stihl 044, 046, 064, 066, 084, 088, MS440,<br>MS441, MS460, MS640, MS650, MS660, MS780, & MS880 | |
| **30-215** | Stihl 1118 120 1611 | **Air Filter** - NEW<br>Fits Stihl most 028<br>Length: 3-5/8", width: 2-11/32", height: 13/16" | |
| **30-216** | Stihl 1139 120 1601 | **Air Filter** - NEW<br>Fits MS 211, MS 211 C, MS 181, & MS 181 C | |
| **30-218** | Stihl 1123 120 1612 | **Air Filter** - NEW<br>Fits MS 250, MS 250 C, 021, 023, 025, P 835, P 840, MS 210,<br>MS 210 C, MS 230, & MS 230 C | |
| **30-220** | Stihl 1140 140 4401 | **Air Filter** - NEW<br>Fits MS 201 T chainsaws<br>Length: 4-7/16", width: 3", height: 3/4" | |
| **30-223** | Stihl 4148 141 0300 | **Air Filter, Paper** - NEW<br>Fits FS 240 C, FS 240 RC, FS 260 C, FS 260 RC, FS 360 C, FS 410<br>C, FS 460 C, FS 460 RC | |

| OREGON | Replaces | Description | |
|---|---|---|---|

## Air Filters

| | | | |
|---|---|---|---|
| **30-853** | Stihl 0000-120-1654 | **Air Filter**<br>Fits models 044, MS440, 066, MS660, 084, & 088<br>Length: 5", width: 4-1/8", height: 1-3/4"<br>3-piece kit | |
| **30-154** | Stihl 1110-120-1601 | **Air Filter**<br>For model 041 | 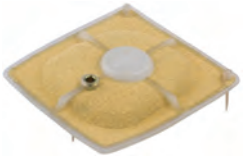 |
| **30-155** | Stihl 1120-120-1600 | **Air Filter**<br>For models 009, 010, & 011 | |
| **55-236** | Stihl 1118-120-1611 | **Air Filter**<br>Fits 028 chainsaw<br>Length: 3-1/2", width: 2-1/4", height: 3/4" | |
| **30-337** | Stihl 1121-120-1617 | **Air Filter**<br>Fits models 024, 026, MS240, & MS260 | |
| **30-156** | Stihl 1130-124-0800 | **Air Filter**<br>For models 017, 018, MS170, & MS180 | |

## Electrical

| | | | |
|---|---|---|---|
| **55-111** | Stihl 1121-430-0200 | **Stop Switch**<br>For models 024, 026, 070, TS08, & TS350 | |
| **33-206** | Universal | **Toggle Switch**<br>2 terminal ends | |
| **33-207** | Universal | **Toggle Switch**<br>1 terminal end | |
| **33-180** | Husqvarna 503 717 901 | **Stop Switch**<br>Fits many Husqvarna chainsaw models | |

## Electrical

| | | | |
|---|---|---|---|
| **33-158** | Husqvarna 503718201 | **On/Off Switch**<br>For chian saw models 232L, 232R, 235FR, 235R, 324LDX, 324LX, 324RX, 326, 336, 339XPT, & 385 | |
| **33-053** | Universal | **Ignition Module**<br>Fits most 2-cycle and 4-cycle engines<br>Used to replace points and condenser | |
| **33-254** | Husqvarna 544018401<br>Husqvarna 503901401 | **Ignition Coil**<br>Fits chian saw models 51, 55, & 55 Rancher (2000–2007) | |
| **33-244** | Stihl 0000-400-1300 | **Ignition Coil**<br>Fits chainsaw models 024, 026, 028, 034, 036, 044, 046, & 048 | |
| **33-243** | Stihl 0000-400-1306<br>Stihl 0000-400-1302 | **Ignition Coil**<br>Fits chainsaw models 021, 023, & 025, and trimmer models FS 160, FS 180, & FS 220 | |
| **33-245** | Stihl 1122-400-1314 | **Ignition Coil**<br>Fits chainsaw models 046, 066, MS460, MS650, & MS660 | |
| **36-425** | Echo 159012-03433 | **Spark Plug Boot** - NEW<br>Echo CS302, CS4600, PB230, PB250, PB500, SRM230, SRM260, SRM280, SRM310, SRM2000, SRM2500, SRM3000, & SRM4600 | |
| **36-424** | Echo 159012-01620 | **Spark Plug Boot** - NEW<br>Echo CS280, CS300, CS3000, PB200, PB400, PB1000, PB2400, SRM200, SRM340, SRM1500, SRM2100, SRM2400, & SRM3100 | |
| **33-208** | Homelite A55373-A | **Spark Plug Boot**<br>5 mm for trimmers and chainsaws<br>Protects plug from moisture<br>Eliminates shock<br>Positive connection | |
| **33-204** | Husqvarna 501-485-402 | **Spark Plug Boot**<br>90 degree for chainsaw models 340, 345, 346, 350, & 351<br>Protects plug from moisture<br>Eliminates shock<br>Positive connection. | |

| OREGON | Replaces | Description | |
|---|---|---|---|

## Electrical

| | | | |
|---|---|---|---|
| **36-427** | Makita 957-604-240 | **Spark Plug Boot** - NEW<br>Fits Makita DPC6200, DPC6201, DPC6400, DPC6401, DPC6410, DPC6411, DPC7001, DPC7300, DPC7301, DPC7310, DPC7311, DPC7321, DPC8112, DPC9500, DPC9501, DCS6401, DCS642120, DCS7301, & DCS7901 | |
| **33-210** | Universal | **Spark Plug Boot**<br>Fits most spark plugs<br>Protects plug from moisture<br>Eliminates shock<br>Positive connection | |

## Fasteners

| | | | |
|---|---|---|---|
| **04-008** | Husqvarna 5032200-01 | **Bar Stud Nut**<br>8 mm | |
| **04-007** | McCulloch 110676 | **Bar Stud Nut**<br>Fits Mini Mac 600<br>1/4-28 | |
| **04-006-0** | McCulloch 120029 | **Bar Stud Nut**<br>Fits Mini Mac 300<br>M6.3 x 1 | |
| **04-009** | Stihl 000-955-0801 | **Bar Stud Nut**<br>Fits 028A, 031AV, 032AV, 034AV, 041AV, 042AV, & 045AV<br>8 mm x 1.25 | |

## Chain Adjusters

| | | | |
|---|---|---|---|
| **56-004** | Echo 43301611031<br>Echo 43301402830<br>John Deere PT6683 | **Chain Adjuster, Includes Pin**<br>Fits models 440, 500, 510, 550, 610, 600, 650, & 750 | |
| **56-022** | Husqvarna 537-0404-21 | **Chain Adjuster Kit**<br>Fits models 362XP, 365, 372, 385, 570, 575, & 576 | |
| **02-137** | Husqvarna 501452702 | **Chain Adjuster** - NEW<br>Fits most 42, 44, 55, 55, Rancher, 133, 234, 238, 242, 340, 345, & 350 chainsaws | |
| **02-138** | Husqvarna 501537101 | **Chain Adjuster** - NEW<br>Fits most 61, 66, 181, 266, 268, 268 Special, 272 XP, 281, & 288 chainsaws | |

# Chainsaw Parts

| OREGON | Replaces | Description | |
|---|---|---|---|

## Chain Adjusters

| | | | |
|---|---|---|---|
| **02-139** | Husqvarna 537 07 12-01 | **Chain Adjuster** - NEW<br>Fits Husqvarna 345, 346, 350, 350, 353, 357, & 359 | |
| **02-136** | Husqvarna 530 01 58-26 | **Bar Adjuster Pin** - NEW<br>Fits Husqvarna 141 | |
| **56-002** | McCulloch 84929<br>McCulloch 90658<br>McCulloch 68656 | **Chain Adjuster with Bolt**<br>Fits Mini Mac 100 & 300 series | |
| **56-003** | McCulloch 102115<br>McCulloch 91982<br>McCulloch 110590 | **Chain Adjuster with Bolt**<br>Fits 600 series | |
| **56-001** | Homelite A00440<br>Homelite 69254-1A<br>Homelite 110590 | **Chain Adjuster with Bolt**<br>Fits XL, XL2, Super 2, 240, & 245 | |
| **56-011** | Stihl 1118-664-1600<br>Stihl 1120-664-1500 | **Chain Adjuster with Bolt**<br>Fits models 009 & 028 | |
| **56-008** | Stihl 1110-664-1600<br>Stihl 1110-664-1500 | **Chain Adjuster with Bolt**<br>Fits models 030, 031, 031AV, 031AVS, 032, 041A, 042, 042AV, 045, 045AV, & 045AV super | |
| **56-025** | Stihl 1106-664-1501<br>Stihl 0000-951-2911 | **Chain Adjuster Kit**<br>Fits models 050, 051, 070, 075, 076, 08S, & 090 | |
| **56-023** | Stihl 1125-007-1021 | **Chain Adjuster Kit**<br>Fits models MS360, MS380, & MS600 | |
| **56-024** | Stihl 1123-640-1900<br>Stihl 1123-664-1400 | **Chain Adjuster Kit**<br>Fits models MS230 & MS250 | |

OREGON Replaces Description

## Grinding Wheels

High-quality, vitrified grinding wheels designed specifically for Oregon® chain and grinders. Resists burning the cutters and leaves a precision finish. Wheels will also fit Efco chain grinders.

| OREGON | Thickness | ID | OD | Chain Size |
|---|---|---|---|---|
| OR534-18 (was 57-430) | 1/8" | 7/8" | 5-3/4" | 1/4", .325", 3/8" LP |
| OR534-316 (was 57-431) | 3/16" | 7/8" | 5-3/4" | 3/8" std., .404" |

## Tygon® Fuel Line



| OREGON | I.D. | O.D. | Length |
|---|---|---|---|
| **Compliant with EPA & CARB regulations; E10 compatible** | | | |
| 07-450 | 1/4" | 3/8" | 50' |
| 07-458 | 5/16" | 7/16" | 50' |
| **Compliant with EPA & CARB Regulations: E85 compatible, sold in bags of 10 pieces; priced per piece** | | | |
| 07-551 | 1/8" | 1/4" | 1' |
| 07-552 | 3/16" | 5/16" | 1' |
| 07-553 | 3/32" | 3/16" | 1' |
| 07-555 | 0.080" | 0.140" | 1' |
| **Non-Compliant with EPA & CARB Regulations; E10 compatible** | | | |
| 07-153 | 3/32" | 3/16" | 50' |
| 07-157 | 1/8" | 3/16" | 25' |
| 07-151 | 1/8" | 1/4" | 50' |
| 07-152 | 3/16" | 5/16" | 50' |
| 07-150 | 1/4" | 3/8" | 50' |
| 07-154 | 1/16" | 1/8" | 50' |
| 07-155 | 0.080" | 0.140" | 50' |
| 07-156 | 0.117" | 0.211" | 25' |
| 07-158 | 5/16" | 7/16" | 50' |

Tygon fuel lines, Oregon fuel lines and primer bulbs are compatible with up to 10% Ethanol blend fuels unless otherwise stated. Using Ethanol blends higher than 10% may speed deterioration and cause leakage.

OREGON Replaces Description

## Oregon® Fuel Line

- Oregon Fuel Line is a specially formulated gas and oil vinyl tubing — made for use with lawnmowers, chainsaws, and snowmobiles
- Maintains air tight seal on fittings — even in extreme temperatures
- Translucent material resists swelling or hardening
- Compare to Tygon®

| OREGON | ID | OD | Length |
|---|---|---|---|
| **Non-Compliant with EPA and CARB regulations — E40 Compatiable** | | | |
| 07-254 | 1/16" (.062") | 1/8" (.125") | 25' |
| 07-262 | 1/16" (.062") | 1/8" (.125") | 12-1/2' |
| 07-263 | .080" | .140" | 12-1/2' |
| 07-255 | .080" | .140" | 25' |
| 07-253 | 3/32" (.093") | 3/16" (.187") | 50' |
| 07-261 | 3/32" (.093") | 3/16" (.187") | 25' |
| 07-264 | .117" | .211" | 12-1/2' |
| 07-266 | 3/32" (.093") | 13/64" (.203") | 25' |
| 07-256 | .117" | .211" | 25' |
| 07-265 | 1/8" (.125") | 3/16" (.187") | 12-1/2' |
| 07-257 | 1/8" (.125") | 3/16" (.187") | 25' |
| 07-259 | 1/8" (.125") | 1/4" (.250") | 25' |
| 07-251 | 1/8" (.125") | 1/4" (.250") | 50' |
| 07-260 | 3/16" (.187") | 5/16" (.312") | 25' |
| 07-252 | 3/16" (.187") | 5/16" (.312") | 50' |
| 07-258 | 1/4" (.250") | 3/8" (.375") | 25' |

## Fuel Line & Primer Bulbs

**07-008** Homelite 63744A
**Fuel Line – Molded**
Fits XL-12 & Super XL-12
Length: 9"

**07-071** Husqvarna 501 28 59-01
**Fuel Line**
Fits chian saws and trimmers 140, 162, 266, 36, & 61

**36-419** Husqvarna 501-51-99-01
**Oil Line** - NEW
Husqvarna 61, 266, 268

**07-009** McCulloch 215708
McCulloch 301011
**Fuel Line**
Fits McCulloch 1010 series
Length: 6-5/16", ID: 3/16"

## Fuel Line & Primer Bulbs

| OREGON | Replaces | Description |
|---|---|---|
| 07-011 | Shindaiwa 20011-8545<br>Shindaiwa 20011-85459 | **Fuel Tube**<br>Fits models T25, T27, C35, & B45 |
| 07-007 | Stihl 1119-358-7700 | **Fuel Line**<br>Fits 038 chainsaw<br>Length: 4-15/16" |
| 07-135 | Stihl 1119-358-7702 | **Fuel Line**<br>Fits MS381 |
| 07-075 | Stihl 1123-358-7701 | **Fuel Line**<br>Fits 021, 023, & 025 |
| 07-136 | Stihl 1124-358-7700 | **Fuel Line**<br>Fits MS640, 660, 780, 088, & 084 |
| 07-072 | Stihl 1127-358-7702 | **Fuel Line**<br>Fits 029, 034, 036, & 039 |
| 07-134 | Stihl 1128-358-7701 | **Fuel Line**<br>Fits MS341, 361, 440, & 460 |
| 07-149 | Stihl 1127-647-9400 | **Oil Hose** - NEW<br>Fits 026, 034, 036, 064, 066, MS 260, & 361 |
| 36-420 | Stihl 1130-647-9400 | **Oil Hose** - NEW<br>Fits Stihl 017, 018, MS170, & MS180 |
| 07-167 | Stihl 1123-141-8600 | **Impulse Line** - NEW<br>Fits Stihl 021, 023, 025, MS210, MS210C, MS230, MS230C, MS250, & MS250C |

| OREGON | OEM | Type | Series | OD | HT |
|---|---|---|---|---|---|
| 49-020 | Walbro 188-12 | Primer bulb | — | .60" | .55" |
| 49-026 | Walbro 188-11 | Primer bulb | WR Series | .575" | .390" |
| 49-027 | Walbro 188-13 | Primer bulb | HDA Series | .725" | .60" |
| 49-028 | Zama 0057003 | Primer bulb | CIQ Series | .675" | .575" |



Tygon® fuel lines, Oregon fuel lines and primer bulbs are compatible with up to 10% Ethanol blend fuels unless otherwise stated. Using Ethanol blends higher than 10% may speed deterioration and cause leakage.

# Chainsaw Parts

| OREGON | Replaces | Description | |
|---|---|---|---|

## Fuel & Oil Caps

| | | | |
|---|---|---|---|
| **07-004** | Homelite 69451<br>Homelite UP06862 | **Duck Bill Valve**<br>Fits XL, XL2, Super 2, & Homelite 63718<br>Used in fuel cap | |
| **56-019** | Stihl 0000-350-0520 | **Fuel Cap**<br>Fits 023, 025, 026, & 028 | |
| **07-131** | 1130-350-0500 | **Fuel Cap**<br>Fits 017, 018, 019, MS170, 180, & 190 | |
| **07-132** | 0000-350-0531 | **Fuel Cap**<br>Fits 066 & MS660 | |
| **56-018** | Stihl 0000-350-0510 | **Oil Cap** | |

## Fuel Filters

| | | | |
|---|---|---|---|
| **07-215** | Universal | **Fuel Filter**<br>For 3/16" inlet<br>Fits 2-cycle engines on chainsaws, trimmers and blowers using porous plastic filter (40 micron) | |
| **07-206** | Echo 131205-06530<br>Tillotson OW-802 | **Fuel Filter**<br>Use with 1/8" fuel line<br>OD: 9/16", length: 1-1/2" | |
| **07-201** | Homelite 64083-1<br>Tillotson 95-182 | **Fuel Filter - Felt**<br>Fits Oregon® 07-206<br>OD: 9/16", ID 1/4", length: 1" | |
| **07-202** | Homelite 59253<br>Tillotson 95-172 | **Fuel Filter - Felt**<br>Fits Oregon 07-207<br>OD: 13/16", ID: 7/16", length: 1" | |
| **07-213** | Husqvarna 503-4432-01<br>Husqvarna 5018776-01<br>Husqvarna 5018776-02<br>Husqvarna 5021618-01 | **Fuel Filter**<br>For 3/16" fuel line<br>Fits models 36, 40, 41, 42, 45, 50, 51, 61, 66, 181, 281, 234, 298, 2100, 2101, & 394 Pro (165R, RX, 244RX) |  |
| **07-207** | John Deere PT12362<br>Tillotson OW-497<br>Weed Eater 24841<br>Pouland 530091878 | **Fuel Filter**<br>Use with 1/8" fuel line<br>OD: 13/16", length: 1-1/2" | |

| OREGON | Replaces | Description | |
|---|---|---|---|

## Fuel Filters

| | | | |
|---|---|---|---|
| **07-200** | McCulloch 93720<br>McCulloch 216985<br>Homelite 49422<br>Homelite UP0387<br>Homelite 96639 | **Fuel Filter**<br>For most saws with 1/8" in tank pickup<br>OD: 1/2", length: 1-1/4" | |
| **07-204** | McCulloch 63932 | **Felt**<br>OD: 3/4", length: 1" | |
| **07-066** | Poulan #530095646 | **Fuel Filter**<br>Use with 1/8" fuel line | |
| **07-133** | 0000-350-3506 | **Fuel Fliter**<br>Fits TS410 & TS420 | |
| **07-109** | Stihl 1115-350-3503 | **Fuel Filter**<br>Use with 1/4" fuel line<br>For most models of chainsaws<br>OD: 23/32", length: 1-3/4" | |
| **07-217** | Stihl 1120-350-3500 | **Fuel Filter**<br>For chainsaws<br>Fits models 021, 023, 025, 020T, 070, 034, 038, 029, & 036 | |
| **07-205** | Stihl 1110-358-1800 | **Foam Fuel Filter**<br>OD: 5/8", length: 1-1/4" | |
| **07-214** | Walbro 125-527 | **Fuel Filter**<br>Dual filtration felt and stainless steel<br>mesh element | |
| **07-219** | Walbro 125-528 | **Fuel Filter**<br>For 3/16" fuel line and engines up to 80cc | |
| **07-137** | Walbro 125-552 | **Fuel Filter**<br>Universal | |
| **07-208** | Zama ZF2 | **Fuel Filter**<br>For 3/16" fuel line<br>Use on small cc engines<br>175 micron | |
| **07-209** | Zama ZF3 | **Fuel Filter**<br>For 1/8" fuel line<br>Use on larger cc engines<br>175 micron | |

# Chainsaw Parts



## Fuel Filters

| OREGON | Replaces | Description | |
|---|---|---|---|
| **07-210** | Zama ZF4 | **Fuel Filter**<br>For 3/16" fuel line<br>Use on larger CC engines<br>175 micron | |
| **07-211** | Zama ZF5 | **Fuel Filter**<br>For 1/4" fuel line<br>Use on larger CC engines<br>175 micron | |

## Starter Pulleys

| | | | |
|---|---|---|---|
| **55-811** | Homelite 97768A | **Starter Pulley**<br>Fits XL, Super 2, 240, & 245 series<br>OD: 2-9/16"<br>Use Oregon® 43-528 (OBS) replacement spring | |
| **31-002** | Husqvarna 5031024-05 | **Starter Pulley**<br>Fits chainsaw models 61, 268, & 272 | |
| **31-006** | Stihl 1123-195-0400 | **Starter Pulley**<br>Fits models 017, 018, 023, & 025 | |

## Starter Springs

| OREGON | OEM No. | Description |
|---|---|---|
| 43-540 | Husqvarna 50 15 204 01 | Starter Spring<br>Fits 61 Rancher, 162, 181, & 266 |
| 43-562 | Husqvarna 50 17 631 01 | Starter Spring<br>Fits 136, 141, 240, 245, 334, 335, 336, 338, 339, 36, 40, 41, 45, 50, 51, & 55 |
| 43-540 | Jonsered 501 52 04 01 | Starter Spring<br>Fits 630, 630 Super, & 670 |
| 43-694 | Stihl 1118-190-0600 | Starter Spring<br>Fits 024, 026, 028, 032, 034, 08S |
| 43-699 | Stihl 1117-190-0601 | Starter Spring<br>Fits 038, 041 (5816401...), 045 (5919431...) 048, 050, 051 (674961...), 056, & 075 |
| 43-685 | Stihl 4112-195-1600 | Starter Spring<br>Fits FS60, 61E, 65AVE, 80, 80E, 90AVE |

## Miscellaneous Saw Part

| | | | |
|---|---|---|---|
| **56-030** | Stihl | **Worm and Spring**<br>Fits 029, 034, 036, & 039 | |

# Chainsaw Parts

# Chainsaw Parts

OREGON®

# Accessories: Shop, Field, & Safety

SFS

# Table of Contents – Accessories: Shop, Field, & Safety

## Sections SFS


**I Shop Items, Filing & Accessories**

Shop Floor Modular Displays . . . . . 4–6
Saw Chain Filing and Accessories . . . . . 7–11
Forestry Accessories . . . . . 12–15
Arborist Saws . . . . . 16–17
Felling Lever, Lifting Picks and Tongs . . . . . 18
Chainsaw Oils and Screnches . . . . . 19–20
Shop Sales & Point of Purchase . . . . . 21–23

**II Shop Tools**

Auto Saw Chain Grinders . . . . . 26–31
Saw Chain Bench Grinders . . . . . 32–40
Grinding Wheels and Stand . . . . . 40–41
Saw Chain Spinners and Breakers . . . . . 42–47
Replacement Parts (obsolete tools) . . . . . 48–57
Lawn Mower Blade Grinders . . . . . 58–63
Lawn Mower Ramps . . . . . SFS 64
Shop Tools . . . . . 64–68
Tire Tools . . . . . 68–71

**III Field Supplies**

Equipment Racks and Accessories . . . . . 74–76
Mower Sulkies . . . . . 77–78
VP Fuels and Treatments . . . . . 79–81
2 and 4-Cycle Oils . . . . . 82–83
Bar and Chain and Hydraulic Oils . . . . . 84
Fuel Stabilizer . . . . . 85
VP Power Wash . . . . . 85
Fuel and Oil Cans, Storage, and Containment . . . . . 86–91
Lubricants, Grease, Cleaners, Solvents, Sealants, and Glues . . . . . 91–99
Hardware Assortments, Nuts, Bolts, and Washers . . . . . 100–106

**IV Safety**

Chainsaw Safety Overview . . . . . 110–111
Safety Helmet and Footware . . . . . 112–113
Chainsaw Chaps . . . . . 114
Rain Gear . . . . . 115
Gloves . . . . . 116
Safety Eyewear . . . . . 117–120
Face Masks . . . . . 120
Hearing Protection . . . . . 121

# SHOP ITEMS, FILING & ACCESSORIES

Shop Floor Modular Displays . . . . . SFS 4–6

Saw Chain Filing and Accessories . . . SFS 7–11

Forestry Accessories . . . . . SFS 12–15

Arborist Saws . . . . . SFS 16–17

Felling Lever, Lifting Picks and Tongs . . SFS 18

Chainsaw Oils and Screnches. . . . . SFS 19–20

Shop Sales & Point of Purchase . . . SFS 21–23

## Shop Floor Modular Displays

- Heavy-duty and attractive
- Tough metal silver vein finish
- Excellent versatility
- Easy setup
- Configure as wall, square or triangle display
- Single grid with optional base adapter

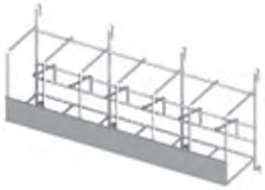

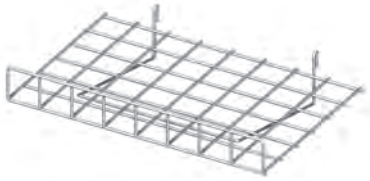

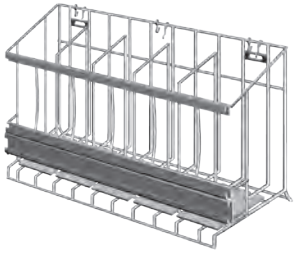

| OREGON | Description | Product Code |
|---|---|---|

## Shop Floor Modular Displays

| | |
|---|---|
| 542600 | **Single Grid Panel**<br>Width: 24" (.61 m), height (including sign): 82-1/2" (2.1 m)<br>One (1) sign holder, one (1) sign, two (2) "L" support legs<br>Ten (10) 4" (10.2 cm) looped metal safety hooks<br>Ten (10) 8" (20.3 cm) looped metal safety hooks |
| 542601 | **Forestry Display Modular Triangle Unit**<br>Three (3) single grid panel sets with brackets to create triangle |
| F00-284 | **Blade Display Modular Triangle Unit**<br>Three (3) Single Grid Panels<br>Six (6) Blade Cage holders |
| F00-280 | **Oregon® Signs**<br>One (1) package of three (3) Oregon signs<br>Printed on both sides |
| F00-281 | **Single Base Adapter**<br>One (1) per box, (1) display panel (P/N 542600 not included)<br>Slips into the "H"-shaped base and stands on its own<br>Product can be displayed on both sides |
| F00-282 | **Shelf**<br>One (1) per box<br>Depth: 12" (30.5 cm), width: 24" (61 cm)<br>Front lip |
| F00-283 | **Mower Blade Cage**<br>One (1) per box<br>Holds 6 different type of blades<br>Includes label holder |
| F00-283-A | **Mower Blade Cage – Wide Slots**<br>One (1) per box, 3-1/4" slots |
| F00-286 | **8" (20.3 cm) Looped Safety Metal Hook**<br>Ten (10) per bag |
| F00-287 | **4" (10.2 cm) Looped Safety Metal Hook**<br>Ten (10) per bag |
| 542196 | **4" (10.2 cm) Prong Hooks**<br>Ten (10) per bag |
| 542197 | **2" (5.1 cm) Prong Hooks**<br>Ten (10) per bag |
| 500032 | **Chain Loop Display – Gravity Feed** |

When setting up a display, always balance product weight on each side and never attach to an insecure surface. **Read instruction sheet carefully.**

## Shop Floor Pinwheel Display

| OREGON | Description | Product Code |
|---|---|---|
| 605890 | Display Rack, 4-Panel Spinner – NEW | |

The complete display (605890) includes one each of the items below, except for hooks are 80 each.

| | |
|---|---|
| 605886 | Display Catalog Holder, Spinner – NEW |
| 605887 | Sign Holder, Spinner Display 22 in x 7 in – NEW |
| 605888 | Display Hook, 4 in Grid Hook Black – NEW |
| 605889 | Display Rack, 4-Panel Spinner Only – NEW |
| 560840 | Slatgrid, Sign, 22 x 7 |

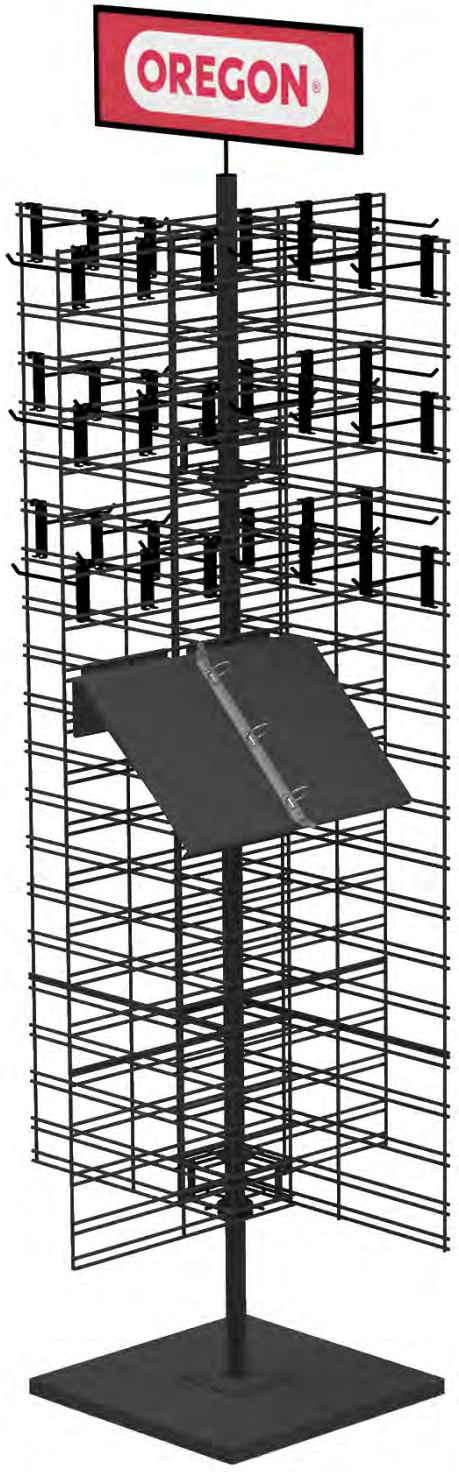


605890

560840

605887

605886

605888

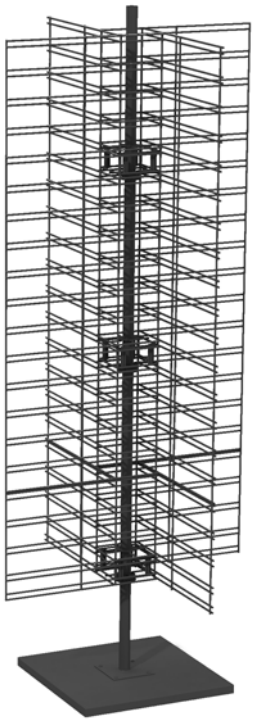

605889

## Color ID™ Files

Introducing a new feature to our premium Oregon Round Files: Color ID.

Color ID is a visual indicator that makes it easier to select the right file straight out of your tool box. Our most popular premium round files are now marked with a distinctive color that denotes the diameter of the file.

You'll find that the Oregon Round Files are the same great product you've come to rely on over the years; we've just added this new exclusive feature to help simplify your day.

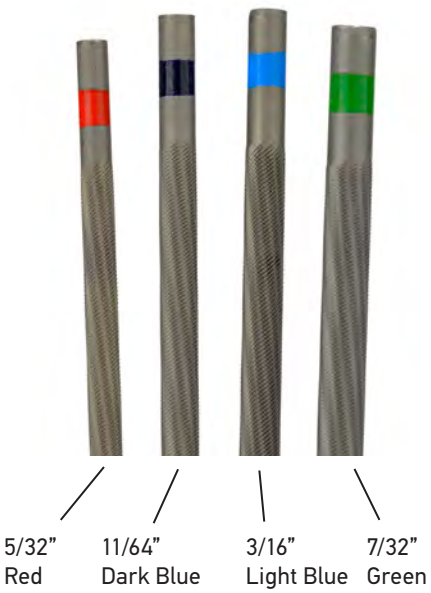


## Summary of Changes & Affected Part Numbers

| Part Number | Diameter | Color ID™ |
|---|---|---|
| **12-Pack Round Files** | | |
| 70502 | 7/32" – 5.5 mm | Green |
| 70503 | 3/16" – 4.8 mm | Light Blue |
| 70504 | 5/32" – 4.00 mm | Red |
| 70505 | 13/64" – 5.2 mm | No Color ID |
| 70511 | 11/64" – 4.5 mm | Dark Blue |
| **4x3-Pack Round Files** | | |
| 70502T | 7/32" – 5.5 mm | Green |
| 70503T | 3/16" – 4.8 mm | Light Blue |
| 70504T | 5/32" – 4.0 mm | Red |
| **6-Pack Round Files** | | |
| 90410 | 5/16" – 8.0 mm | No color ID |

# Saw Chain Filing

## Oregon® Round Files

The double-cut file from Oregon is an outstanding file for sharpening saw chain.

2-pack

4x3-Pack
4 vinyl packs with 3 files each

12-pack

| OREGON | 2-Pack Diameters | |
|---|---|---|
| **40459** | 5/32" | 4.0 mm |
| **40461** | 11/64" | 4.5 mm |
| **40460** | 3/16" | 4.8 mm |
| **40458** | 7/32" | 5.5 mm |
| | **4x3-Pack Diameters** | |
| **70504T** | 5/32" | 4.0 mm |
| **70503T** | 3/16" | 4.8 mm |
| **70502T** | 7/32" | 5.5 mm |
| | **12-Pack Diameters** | |
| **70504** | 5/32" | 4.0 mm |
| **70511** | 11/64" | 4.5 mm |
| **70503** | 3/16" | 4.8 mm |
| **70505** | 13/64" | 5.2 mm |
| **70502** | 7/32" | 5.5 mm |
| **70501** | 1/4" | 6.4 mm |
| | **6-Pack Diameter** | |
| **90410** | 5/16" | 8.0 mm |

Product Code

Note: See "Filing Angles" in the Saw Chain section's "Saw Chain Sharpening Chart" for the correct file.

- Superior performance
- Finest steel material
- State-of-the-art production and finishing processes
- Smooth filing action
- Long stay-sharp
- Resists clogging

## Oregon Flat Files

Used in combination with an Oregon depth gauge tool.

| OREGON | Description | Product Code |
|---|---|---|
| **12211** | 6" Flat Depth Gauge File | |

- Aggressive cutting design
- Made from the finest steel
- Specially heat-treated for maximum stay-sharp
- Resists clogging
- 6" working length

## Depth Gauge Tools

A major factor affecting any saw chain's level of safety and performance is the depth gauge setting.

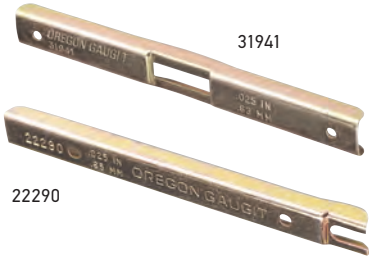


| OREGON | Description – 10-Packs | Product Code |
|---|---|---|
| **31941** | .025" Drop-Center Depth Gauge Tool | |
| **22290** | .025" Depth Gauge Tool | |
| **22291** | .030" Depth Gauge Tool | |
| **38850** | .050" Depth Gauge Tool | |
| **26800** | .060" Depth Gauge Tool | |
| **107529** | .070" Depth Gauge Tool | |

- Makes accurate, consistent depth gauge settings easy
- Available in five sizes with built-in .025", .030", .050", .060" or .070" depth gauge settings

## Depth Gauge Tool & Flat File

| OREGON | Description | Product Code |
|---|---|---|
| 40466 | Depth Gauge Filing Kit<br>Includes .025" drop-center depth gauge tool & flat file<br>Display pack | |

## File Handles

Anytime files are sold, file handles can be sold too, using the Oregon® display box.

| OREGON | Description | Product Code |
|---|---|---|
| 30870-B | File Handles<br>Display box (100 handles)<br>Fits on the sales counter<br>Holds 100 wooden handles<br>Has a stand-up space for files<br>(files not included) | |
| 558286 | File Handles<br>Bulk pack (25 handles) | |

## File Guide

Assembled file guide includes: one round file, one frame, and one wooden handle – display pack.

- Grips file securely
- Lines on the guide's frame make it easy to align the file consistently and correctly
- Keeps file at the correct depth

| | Chain Number by Pitch | | | | | | |
|---|---|---|---|---|---|---|---|
| OREGON | 1/4 | 3/8 low pro | .325 | 3/8 | .404 | File Diameter | Product Code |
| 37534 | 25 | 91 | | | | 5/32" (4.0 mm) | |
| 31692 | | 90 | 33<br>34<br>35 | | | 4.5 mm (11/64") | |
| 31690 | | | 95<br>20<br>21<br>22 | | | 3/16" (4.8 mm) | |
| 31686 | | | | 72<br>73<br>75 | 26<br>27<br>58<br>59<br>68 | 7/32" (5.5 mm) | |

# Saw Chain Filing

## Professional Maintenance Kit

The Oregon® Professional Maintenance Kit for chainsaw chains and guide bars.

| OREGON | Chain Number by Pitch 1/4 | 3/8 low pro | .325 | 3/8 | .404 | File Diameter | Product Code |
|---|---|---|---|---|---|---|---|
| **558488** | 25 | 91 | | | | 5/32" (4.0 mm) | |
| **558549** | | 90 | 33<br>34<br>35 | | | 4.5 mm (11/64") | |
| **558550** | | | 95<br>20<br>21<br>22 | | | 3/16" (4.8 mm) | |
| **558551** | | | | 72<br>73<br>75 | 26<br>27<br>58<br>59<br>68 | 7/32" (5.5 mm) | |

**Includes One of Each:**

- Assembled file guide with file for chain top-plate maintenance
- Assembled wooden handle & flat file and one depth gauge tool for chain depth gauge maintenance
- Bar groove cleaner to clean guide bars groove & oil holes
- User manual
- Bar and chain measuring tool

**Features:**

- Easy-to-carry rolled-up pouch
- Highly visible red color
- Easy to attach on waist belt

## Chain Sharpening Kits

| OREGON | Chain Number by Pitch 1/4 | 3/8 low pro | .325 | 3/8 | .404 | File Diameter | Product Code |
|---|---|---|---|---|---|---|---|
| **38276** | 25 | 91 | | | | 5/32" (4.0 mm) | |
| **38278** | | 90 | 33<br>34<br>35 | | | 4.5 mm (11/64") | |
| **38277** | | | 95<br>20<br>21<br>22 | | | 3/16" (4.8 mm) | |
| **38275** | | | | 72<br>73<br>75 | 26<br>27<br>58<br>59<br>68 | 7/32" (5.5 mm) | |

**Includes:**

One (1) assembled file guide
Two (2) wooden file handles
One (1) round file
One (1) flat file
One (1) .025" drop-center depth gauge tool
Display pack

## Professional Bar-Mount Filing Guide

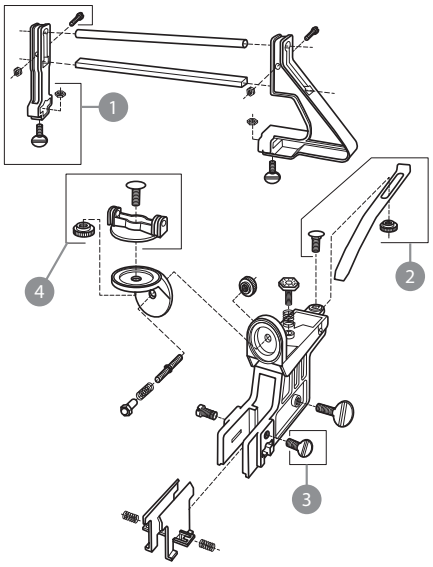


This precision-built filing guide gives consistent, accurate sharpening results comparable to that of a motorized grinder for a fraction of the cost.

- Easy to install on the saw guide bar with the chain in place
- Replacement parts are available separately
- File not included

| OREGON | Description | Product Code |
|---|---|---|
| **557849** | Professional Filing Guide – Display Pack | |
| **39495** | Stop-Spring Kit | |
| **39498** | Swivel Kit | |

| OREGON | No. | Replacement Parts (557849 & 23736A) | Product Code |
|---|---|---|---|
| **39491** | 1 | Arm Kit | |
| **39495** | 2 | Stop-Spring Kit | |
| **39497** | 3 | Small Thumb Screw (5-Pack) | |
| **39498** | 4 | Swivel Kit | |

## 12-Volt Electric Sure Sharp®

A durable, economical tool that makes hand-sharpening easy.

- Rugged and reliable
- Withstands periods of extended use
- Runs on standard 12-Volt auto-type battery or connect using automobile power adapter
- Sharpens any round-ground 1/4", 3/8" Low Profile™, .325", 3/8" or .404" pitch chain
- Shank lock feature allows easier stone replacement
- Includes: four sizes of sharpening stones (5/32", 3/16", 7/32", & 4.5 mm), and collet wrench

| OREGON | Description | Product Code |
|---|---|---|
| **585015** | Electric Sure Sharp<br>12 Volt – display pack | |

# Forestry Accessories

## Sharpening Stones

3-Pack

25-Pack

For use with Oregon® Electric Sure Sharp® and other grinders. These stones leave an excellent cutting edge on saw chain.

- Available in packs of 3 or 25
- Choice of diameters
- Available in standard or threaded shanks to fit most brands of grinders

**Note:** See the "Saw Chain Sharpening Chart" in the Saw Chain section for the correct stone diameter (file diameter) to use on your Oregon chain.

### Replacement Stones for Oregon 28588A, 28588, 30846A, 30846, 585015, & 575214

| OREGON | 3-Pack for Oregon | | Threaded | Product Code |
|---|---|---|---|---|
| **31397** | 5/32" | 4.0 mm | No | |
| **32628** | 11/64" | 4.5 mm | No | |
| **31396** | 3/16" | 4.8 mm | No | |
| **31398** | 7/32" | 5.5 mm | No | |
| | **25-Pack for Oregon** | | | |
| **31369** | 5/32" | 4.0 mm | No | |
| **31370** | 3/16" | 5.5 mm | No | |
| **31371** | 7/32" | 5.5 mm | No | |

### Replacement Stones for Other Grinders

| OREGON | 3-Pack for Others | | Threaded | Product Code |
|---|---|---|---|---|
| **31399** | 5/32" | 4.0 mm | Yes | |
| **32630** | 11/64" | 4.5 mm | Yes | |
| **31401** | 3/16" | 4.8 mm | Yes | |
| **31400** | 7/32" | 5.5 mm | Yes | |
| | **25-Pack for Others** | | | |
| **31372** | 5/32" | 4.0 mm | Yes | |
| **31373** | 3/16" | 5.5 mm | Yes | |
| **31374** | 7/32" | 5.5 mm | Yes | |

## Grease Guns & Grease Cartridges

These products reduce friction and enhance performance in a variety of chainsaw applications

- Helps prevent premature wear, especially on guide bar noses
- Choice of standard, premium, & premium steel grease guns
- Refill cartridges can be used in all three types of guns

110534

40469-A 21939

| OREGON | Description | Product Code |
|---|---|---|
| **40469-A** | Single-Use Grease Gun – Display Pack | |
| **21939** | Premium Grease Gun | |
| **110534** | Premium Steel Grease Gun with Zerk Adaptor & Refill Cartridge | |
| | **Refills** | |
| **108653** | Refill Grease Cartridges, 3-Pack | |

108653

## Grease Gun Display Box

Encourages impulse purchases and increases accessory sales.

- Fits on dealer's customer counter
- Holds 40 economical, disposable, easy-to-use grease guns

| OREGON | Description | Product Code |
|---|---|---|
| 31187-A | Plastic, Single-Use Grease Gun Display Box (40-Pack) | |

## Bar Rail Dresser & Replacement Files

This compact tool goes anywhere and makes it easy to remove the effects of normal wear or remove minor damage as it dresses your bar's rails back to square.

- Tool can be used in varied positions
- File dresses the outer edges of the rails or tops of rails
- Handle extremely durable
- Files available separately for easy replacement
- Outstanding value
- Long overall tool life

| OREGON | Description | Product Code |
|---|---|---|
| 111439 | Bar Rail Dresser – Display Pack | |
| | **Replacement Parts** | |
| 111589 | Replacement Files, 6-Pack | |

## Bar Covers

Protects your bar and chain from damage.

- Durable plastic material
- Available in two lengths

| OREGON | Description | Product Code |
|---|---|---|
| 28934 | Oregon® 16" Bar Cover | |
| 28933 | Oregon 20" Bar Cover | |

# Forestry Accessories

## Logger's Filing Vise

Makes chain maintenance easier, especially in the field.

- Goes anywhere
- Vise's forks drive into any stump
- Vise's jaw locks the bar securely

| OREGON | Description | Product Code |
|---|---|---|
| 26368A | Logger's Filing Vise – Display Pack | |

## Guide Bar Groove Cleaner

| OREGON | Description | Product Code |
|---|---|---|
| 13616 | Bulk Guide Bar Groove Cleaner | |

## Guide Bar & Chain Measuring Tool

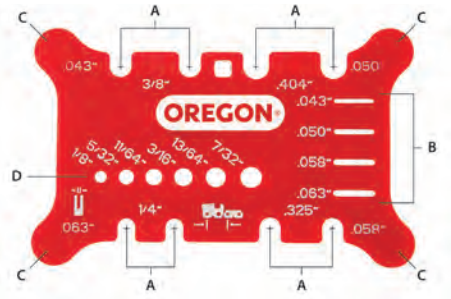


Pocket-sized gauge for quick and easy identification. Measures the following:

A. Chain pitch
B. Chain gauge
C. Bar groove width
D. File size

| OREGON | Description | Product Code |
|---|---|---|
| 556418 | Guide Bar & Chain Measuring Tool<br>50-pack, supplemental instructions available | |

## Felling Wedges

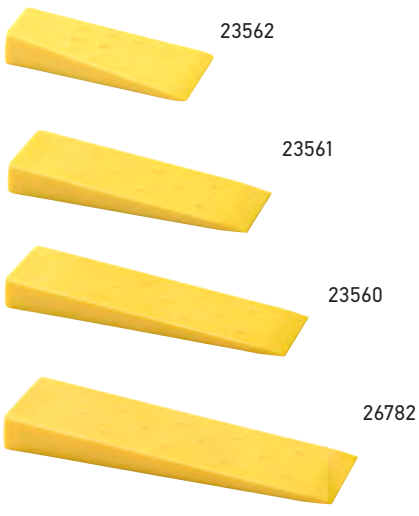

558732

The wedge designed for professional loggers.

- Durable
- Light-weight
- Serrations hold wedge in the tree securely

| OREGON | Description | Product Code |
|---|---|---|
| 558732 | 5-1/2" Oregon® Wedge – Integrated Hang Tab | |
| 559245 | 8" Oregon Wedge – Integrated Hang Tab | |
| 23562 | 5-1/2" Oregon Bulk Plastic Wedge | |
| 23561 | 8" Oregon Bulk Plastic Wedge | |
| 23560 | 10" Oregon Bulk Plastic Wedge | |
| 26782 | 12" Oregon Bulk Plastic Wedge | |

## Arborist Saws

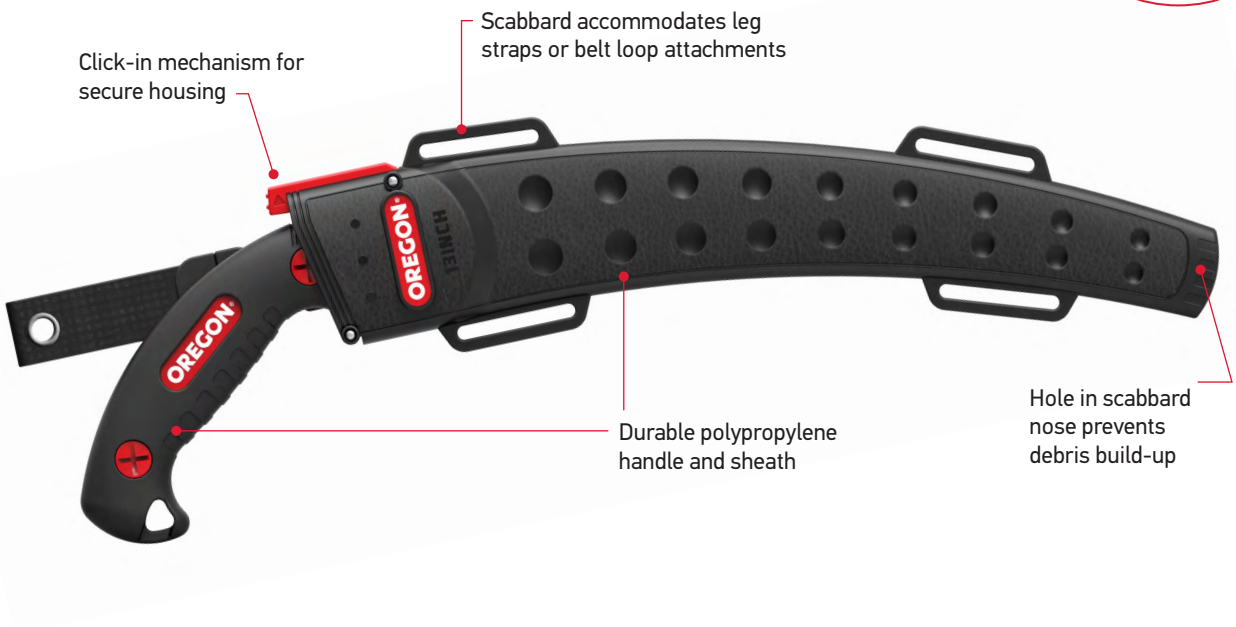


*Compared to set teeth blades
**Replacement blades available separately for purchase

| OREGON | Description | Product Code |
|---|---|---|

## Straight Hand Saw

| | |
|---|---|
| 600138 | **Straight Hand Saw**<br>Includes scabbard for blade |
| 600140 | **12-Inch Straight Replacement Blade** |
| 600137 | **Replacement Nuts for Handle**<br>Pack of 10 |

**Includes Scabbard**

## Curved Hand Saw

| | |
|---|---|
| 600136 | **Curved Hand Saw**<br>Includes scabbard for blade |
| 600139 | **13-Inch Curved Replacement Blade** |
| 600137 | **Replacement Nuts for Handle**<br>Pack of 10 |

**Includes Scabbard**

# Forestry Accessories

## Felling Lever

Edge designed for excellent grip on wood

- Heavy-duty forged lever
- Sliding, forged cant hook
- Bent handle provides extra leverage
- Comfortable non-slip handle

| OREGON | Description | Product Code |
|---|---|---|
| 536305 | Long-Handled Felling Lever – 51" Long | |

## Lifting Picks

Notches for extra grip in frozen wood

Non-slip handle with stop end

- Significantly easier log handling
- Ergonomic, light-weight aluminum handle
- Sharp tip grips wood easily

| OREGON | Description | Product Code |
|---|---|---|
| 536319 | Lifting Pick – 19.7" | |
| 536320 | Long Lifting Pick – 27.5" | |

## Lifting Tongs

Non-slip ergonomic leather handle (Patent Pending)

- Forged steel
- Non-slip leather (small tongs) or rubber (large tongs) handle
- Articulated joints

| OREGON | Description | Product Code |
|---|---|---|
| 536321 | Small Lifting Tong – 8" Jaw Opening | |
| 536306 | Large Lifting Tong – 12" Jaw Opening | |

## Marking Crayons & Crayon Holder

Writes and marks on wood, metal, stone, concrete, tiles, ceramic, plastic, glass, rubber, etc.

### Crayon Features

- 6-sided shape to prevent rolling
- Paper sleeve
- Diameter: 12 mm; length: 120 mm
- 12 per box

### Crayon Holder Features

- Made of durable metal
- For round and hexagonal crayons with diameter of 10-12 mm

| OREGON | Description | Product Code |
|---|---|---|
| 295360 | Marking Crayon (12-Pack) – Blue | |
| 295361 | Marking Crayon (12-Pack) – Red | |
| 295363 | Marking Crayon (12-Pack) – Yellow | |
| 295365 | Marking Crayon (12-Pack) – Black | |
| 520272 | Crayon Holder | |

## Guide Bar & Chain Oil

Specially compounded to provide extra high tackiness and reduce "throw off" even under adverse weather conditions. Provides maximum engine power, low friction and faster cutting time. High film strength prevents wear or scuffing of chain links and guide bars while protecting metal parts against corrosion and rust. Resists build up of deposits such as pitch, sap, or gum.

| OREGON | Description | Qty. | Size | Product Code |
|---|---|---|---|---|
| 54-026 | Guide Bar & Chain Oil | 12 | 1 quart | |
| 54-059 | Guide Bar & Chain Oil | 4 | 1 gallon | |

## Only One™ Two-Cycle Engine Oil

Only One is a two-cycle engine oil that's easy to use. Only One is a "universal mix" product, meaning no more confusing gas-to-oil mixtures. Just follow the "gallons mixed" information on each package.

- Reduces particulate emissions and oil consumption by at least 50% over standard oil
- Good for all two-cycle engines
- Works with gasohol
- Complies fully with California's Proposition 65 guidelines

| OREGON | Description | Qty. | Makes | Product Code |
|---|---|---|---|---|
| 40092 | 1.8 oz. Pillow Pack | 48 | 1 gallon | |

# Forestry Accessories

## Screnches

| Dimensions (mm) | Driver Type: | | | | | | | | | | |
|---|---|---|---|---|---|---|---|---|---|---|---|
| | S1 x S2 | 13 x 19 | 13 x 19 | 13 x 19 | 19 x 10 | 16 x 13 | 19 x 17 | 19 | 19 x 14 | 21 x 17 | 15 x 19 | 16 x 11 |
| | A1 | 25 | 21 | 33 | 35 | 35 | 27 | 12 | 35 | 30 | 28 | 40 |
| | L2 | 175 | 177 | 171 | 172 | 172 | 177 | 177 | 175 | 172 | 177 | 177 |
| | L1 | 52 | 44 | 68 | 70 | 72 | 57 | 51 | 70 | 60 | 56 | 80 |
| Oregon® No's: | | 57-005 | 57-017 | 57-016 | 57-003 | 57-002 | 57-008 | 57-019 | 57-006 | 57-010 | 57-014 | 57-001 |
| Dolmar | | | ✓ | | | | ✓ | | | | | |
| Echo | | | ✓ | ✓ | ✓ | | | | ✓ | | | |
| Homelite | | | | | | | | | | | | ✓ |
| Husqvarna | | ✓ | ✓ | ✓ | | ✓ | | | | | | |
| John Deere | | | | ✓ | ✓ | ✓ | | | ✓ | | | |
| Jonsered | | ✓ | ✓ | | | ✓ | | | | | ✓ | |
| McCulloch | | ✓ | | | | | | | | | | ✓ |
| Efco / Oleo-Mac | | | | ✓ | ✓ | | ✓ | | | | | |
| Partner | | ✓ | ✓ | | | ✓ | | | | | | |
| Pioneer | | | | | | | | | ✓ | | | |
| Poulan | | | ✓ | | | | | | ✓ | | ✓ | |
| Shindaiwa | | ✓ | ✓ | | ✓ | | | | | | | |
| Stihl | | | ✓ | ✓ | | | ✓ | ✓ | | ✓ | | |

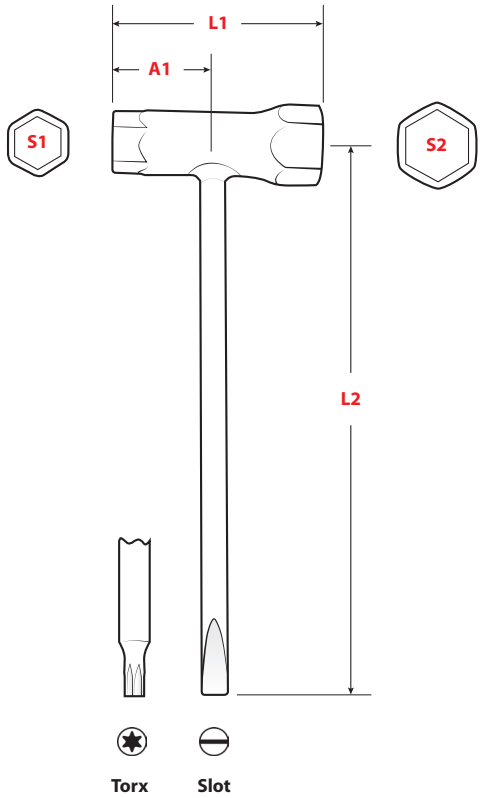

| OREGON | Description | Product Code |
|---|---|---|

## Safety Eyewear* Display Rack

**42-149**

**Safety Eyewear Display Rack**
Holds 24 pair of eyewear
4-sided, mounted on turntable base
Two mirrors attached
Oregon® logo
*Eyewear not included

## Oregon Point-of-Purchase Support

**42-215** **5" Display Metal Hook**

# Shop Items

| OREGON | Description | Product Code |
|---|---|---|

## Parts Bin Boxes

**F00-230** **Parts Box — Cardboard**
4" x 12", four dividers
50 per case (order by case, priced by case)

**F00-231** **Parts Box — Cardboard**
8" x 12", four dividers
30 per case (order by case, priced by case)

**F00-232** **Parts Box — Cardboard**
12" x 12", no dividers provided
25 per case (order by case, priced by case)

## Blade Boxes

**22STD** **Blade Box**
22" standard
Bundle of 50 boxes
Length: 22-11/16", width: 3-7/16", height: 2-11/16"

**22TALL** **Blade Box**
22" tall
Bundle of 50 boxes
Length: 22-11/16", width: 5-3/4", height: 2-1/2"

**26STD** **Blade Box**
26" standard
Bundle of 50 boxes

**30STD** **Blade Box**
30" standard
Bundle of 50 boxes

## Inventory Essentials

**10-002** **Service Tickets**
Tear-off customer receipt
Number for tracking purposes
500 per pack
Priced per pack

| OREGON | Description | Product Code |
|---|---|---|

## Oregon Catalogs

**OEP-FOR-1** **2019 Oregon Dual Line Catalog**
Combines 2019 Oregon Outdoor Power Equipment, Forestry, Lawn & Garden, & Shop, Field, & Safety products

## Training Tools

Oregon Cutter Display — This eye-catching display is a great way to promote Oregon saw chain on your counter. These 10X scale models of some of our most popular cutters can be used to show the features of either Oregon 72LPX or 72V chains. It makes a great conversation starter too.

**551655** **Oregon Cutter Display**
Stand with 72LPX cutter
Height: 6-1/4"
Length: 8"
Width: 3-1/4"

**551654** **Oregon Cutter Display**
Stand with 72V cutter
Height: 6-1/4"
Length: 8"
Width: 3-1/4"

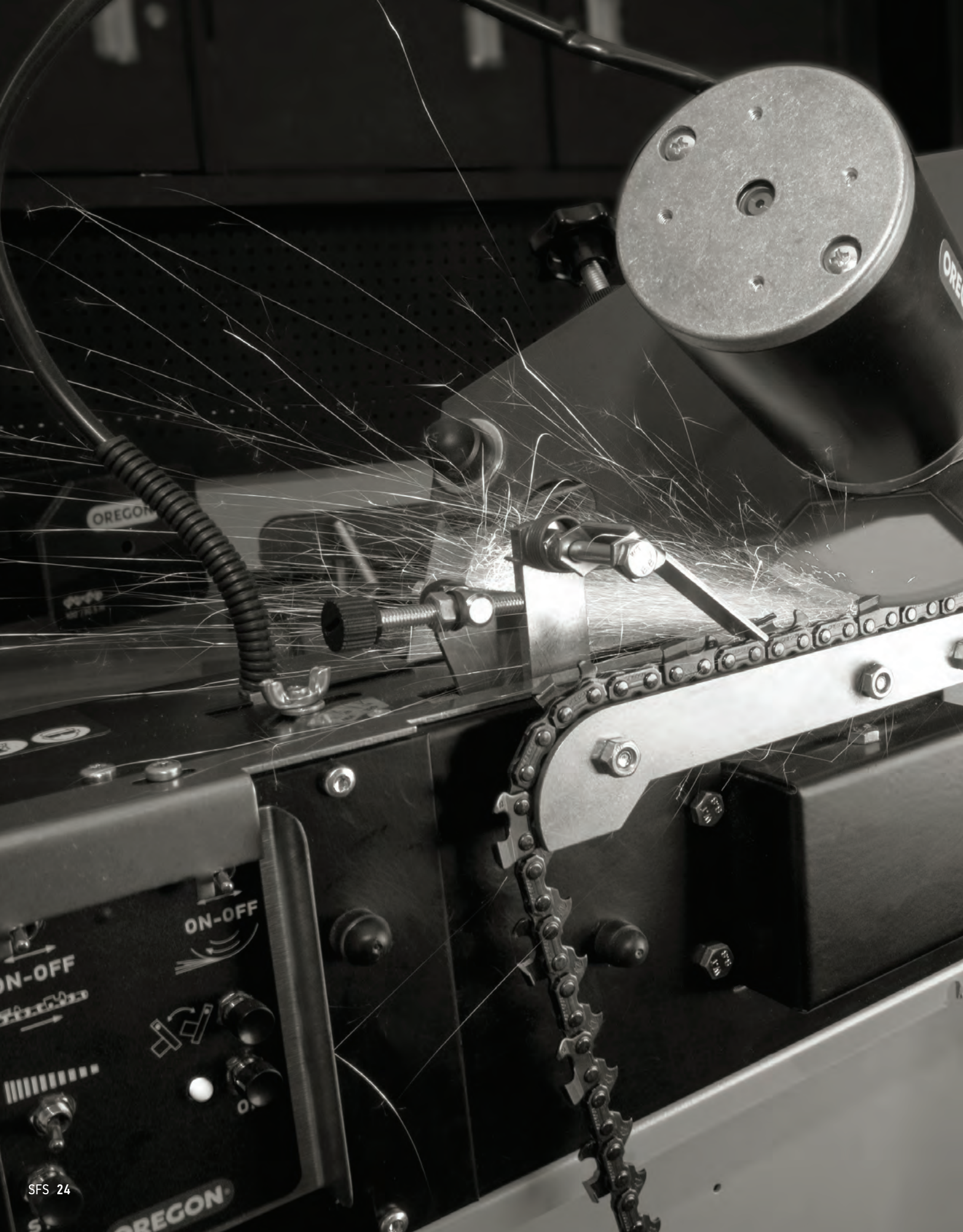
ON-OFF
OREGON

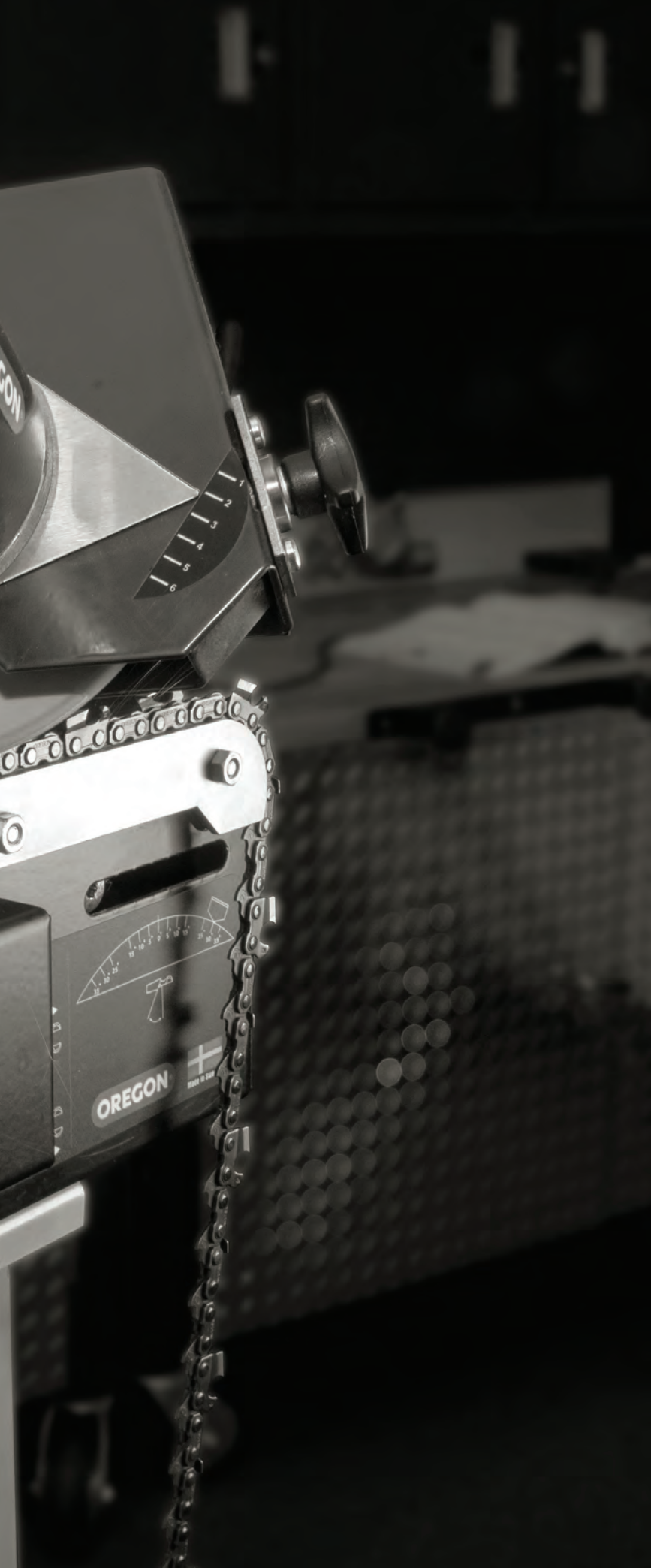


# SHOP TOOLS

Auto Saw Chain Grinders . . . . . SFS 26–31
Saw Chain Bench Grinders . . . . . SFS 32–40
Grinding Wheels and Stand . . . . . SFS 40–41
Saw Chain Spinners and Breakers . . SFS 42–47
Replacement Parts (obsolete tools) . SFS 48–57
Lawn Mower Blade Grinders . . . . . SFS 58–63
Lawn Mower Ramps . . . . . SFS 64
Shop Tools . . . . . SFS 64–68
Tire Tools . . . . . SFS 68–71

The 700-Series Auto Chain Grinders have benefits for both dealers and professional end users seeking an efficient, profitable solution for high-volume chain sharpening.

# 700-Series Advantage

**Labor Cost Savings**
Once the learning phase is completed, the machine requires minimal set-up and supervision, freeing up staff for more value-added tasks.

**Consistent, High-Quality Grind**
Auto chain grinders minimize human involvement, and offer a consistent, standardized, high-quality grind.

## FOR DEALERS

**Profit Center**
With the break even time as short as 58 days, grinding chains with these machines makes chain sharpening profitable.

**Increased Foot Traffic**
A better-quality grind results in satisfied customers and motivates them to revisit the shop, increasing foot traffic and customer retention.

## FOR PROFESSIONALS

**Decreased Downtime**
For professional end users, having grinders out in the field and sharpening chain in a short time at a better quality increases efficiency and decreases downtime on the actual job.

## 720-120
All-in-One

- Auto feeding
- Auto grinding
- Air tensioniing
- Auto stopping
- Simultaneous cutter and depth gauge grinding, gullet cleaning
- Digital counter
- Skip tooth grinding (standard: 3/8")
- Stand with air tensioning
- Incremental speed setting

## 710-120
Standard

- Auto feeding
- Auto grinding
- Auto stopping
- Two-speed setting

*Optional Accessories*

Stand with air tensioning

Chain weight

# ACCESSORIES



### Stand & Air Tensioner

| OREGON | Description |
|---|---|
| 700-STND | Stand & Air Tensioner<br>VS113937-189895<br>*Included with the 720-120 but is an option on the 710-120* |

### Telescoping Chain Extension

If you have extra long (.404" or 3/4") harvester chains, our telescopic extension is an ideal choice. It accommodates up to 12 ft. chain loops.

| | |
|---|---|
| 590247 | Telescopic Chain Extension<br>VS49867-83112 |

### Air Tensioner Extension

Shorter chains—smaller than 40 drive links—require this extension to properly engage the tensioning system.

| | |
|---|---|
| 591152 | Air Tensioner Extension<br>VS12537-20895 |

### Chain Weight

| | |
|---|---|
| 590246 | Chain Weight<br>VS9055-15092 |

### Grinding Wheels

Oregon® makes grinding wheels designed specifically for the 700-Series that are specially formulated to reduce friction and prevent burning. The wheels leave a sharper and cleaner finish on the cutters.

| OREGON | Description |
|---|---|
| **5–7/8" Ceramic Grinding Wheels** | |
| OR600-18 | 1/8" (3.2mm) Wheel<br>Grinds 3/8" Low Profile™, 1/4"<br>VG3330-5550 |
| OR600-14 | 1/4" (6.4mm) Wheel<br>Grinds depth gauge only<br>VG3330-5550 |
| OR600-38 | 3/8" (10 mm) Wheel<br>Grinds 3/4" depth gauge only<br>VG3330-5550 |
| OR600-316 | 3/16" (4.8 mm) Wheel<br>Grinds 0.325", 3/8", .404"<br>VG3330-5550 |
| OR600-516 | 5/16" (7.9 mm) Wheel<br>Grinds 3/4" pitch<br>VG3330-5550 |

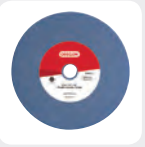

| | |
|---|---|
| **5–3/4" CBN Grinding Wheels** | |
| OR534-18-CBN | 1/8" (3.2mm) Wheel<br>Grinds 3/8" Low Profile, 1/4"<br>VG15358-25597 |
| OR534-316-CBN | 3/16" (4.8 mm) Wheel<br>Grinds 0.325", 3/8", .404"<br>VG15358-25597 |
| OR534-516- CBN | 5/16" (7.9 mm) Wheel<br>Grinds 3/4" pitch<br>VG15358-25597 |

## 720-120 – All-in-One Auto Grinder

The most efficient option for up to .404" pitch, the All-in-One 720-120 simultaneously sharpens the cutter, sets the depth gauge, and cleans the gullet. Stand and chain tensioner is included.

| OREGON | Description | Product Code |
|---|---|---|
| 720-120 | All-in-One Auto Grinder | |

### Included Accessories

| | |
|---|---|
| 700-STND | Stand & Air Tensioner |
| OR600-18 | 1/8" (3.2mm) Wheel — Grinds 3/8" Low Profile™, 1/4" |
| OR600-316 | 3/16" (4.8 mm) Wheel – Grinds 0.325", 3/8", .404" |

II

## 720-120 – Replacement Parts Diagram

| No. | OREGON | Replacement Parts | Product Code |
|---|---|---|---|
| 1 | 590713 | Adjuster complete | |
| 2 | 590690 | Chain lock | |
| 3 | 590837 | Holder | |
| 4 | 590704 | Spring | |
| 5 | 590703 | Chain pusher | |
| 6 | 590684 | Motor cover | |
| 7 | 590685 | Turning motor | |
| 8 | 590702 | Tension spring | |
| 9 | 590856 | Cam curve assembly | |
| 10 | 590819 | Turning motor assembly | |
| 11 | 590688 | Micro switch | |
| 12 | 590820 | Wiring harness | |
| 13 | 590821 | Chain vise complete | |
| 14 | 590822 | Control panel assembly | |
| 15 | 590691 | PDE bearing | |
| 16 | 590834 | Control unit (PCB) | |
| 17 | 590694 | Bolt M6 x 30 | |
| 18 | 590695 | Stop arm, optional | |
| 19 | 590825 | Wire lifter assembly | |
| 20 | 590859 | Pneumatic valve assembly | |
| 21 | 590697 | Lock axis assembly | |
| 22 | 590698 | Motor housing | |
| 23 | 590826 | Potentiometer | |
| 24 | 590827 | Counter | |
| | 590828 | Battery for counter | |
| 25 | 590858 | Motor cover | |
| 26 | 590829 | Chain pusher motor assembly | |
| 27 | 590832 | Compression spring | |
| 28 | 590836 | Chain pusher skip tooth assembly | |
| 29 | 590839 | Grinding head cover | |
| 30 | 590845 | Grinding wheel guard | |
| 31 | 590840 | Grinding wheel centering knob | |
| 32 | 590841 | Grinding wheel nut | |
| 33 | | Grinding wheel (see page SFS 25) | |
| 34 | 590813 | PDE bearing 10 | |
| 35 | 590842 | Turning arm assembly | |
| 36 | 590848 | Center spring | |
| 37 | 590850 | Lifting arm assembly | |
| 38 | 590849 | Depth gauge motor assembly | |
| 39 | 590857 | Wiring harness | |
| 40 | 590853 | Depth gauge motor | |
| 41 | 590854 | Micro switch | |
| 42 | 590832 | Compression spring | |
| 43 | 590844 | Degree beam | |
| 44 | 590843 | Axis | |
| 45 | 590817 | Wire | |
| 46 | 590912 | Plastic nut | |
| 47 | 590816 | Ball bearing 6000ZZ | |
| 48 | 590721 | Grinding motor | |
| 49 | 590855 | Adjusting nut | |
| 50 | 590838 | Grinding head assembly | |
| 51 | 590720 | Adjuster assembly | |

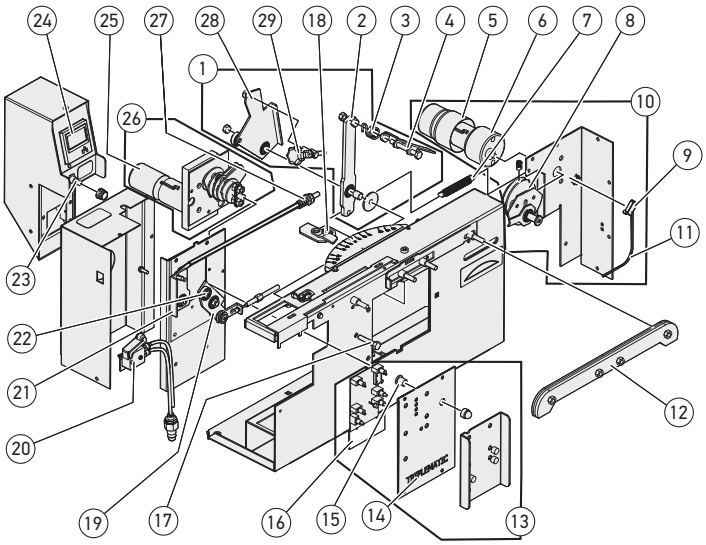


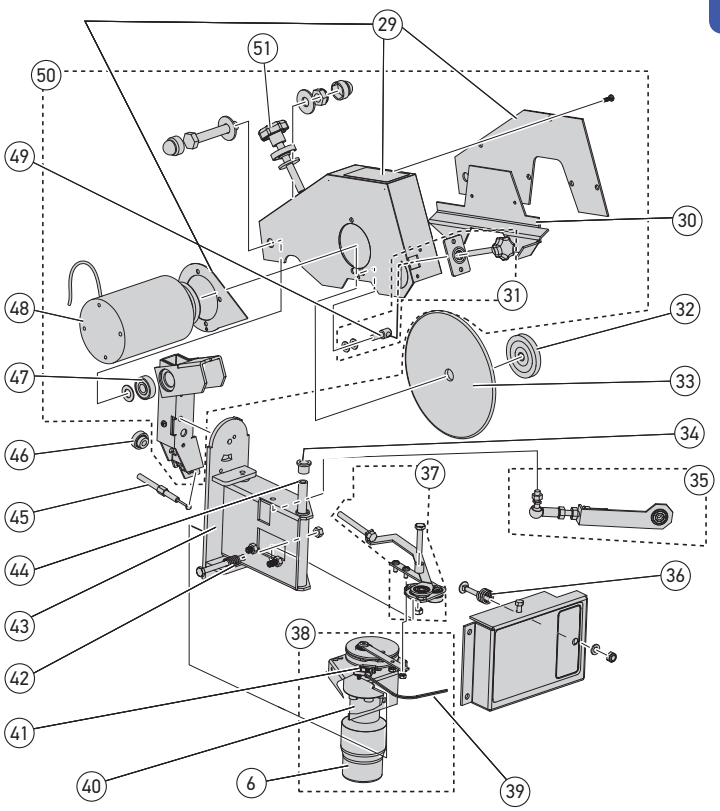


II

## 710-120 – Standard Auto Grinder

Save time and labor with the Oregon® 710-120. The standard model grinds chains up to .404" pitch.

| OREGON | Description | Product Code |
|---|---|---|
| 710-120 | Standard Auto Grinder | |

**Included Accessories**

| | |
|---|---|
| OR600-18 | 1/8" (3.2mm) Wheel — Grinds 3/8" Low Profile™, 1/4" |
| OR600-316 | 3/16" (4.8 mm) Wheel – Grinds 0.325", 3/8", .404" |
| 590681 | Stop Clamp |

**Optional Accessories (sold separately)**

| | |
|---|---|
| 700-STND | Stand & Air Tensioner |
| 590246 | Chain Weight |

**Optional**

Stand and tensioning are sold separately for stability and chain tensioning

For use with 710-120 without a stand, this helps to tension the chain during sharpening

## 710-120 – Replacement Parts Diagram

| No. | OREGON | Replacement Parts | Product Code |
|---|---|---|---|
| 1 | 590713 | Adjuster complete | |
| 2 | 590690 | Chain lock | |
| 3 | 590837 | Holder | |
| 4 | 590704 | Spring | |
| 5 | 590703 | Chain pusher | |
| 6 | 590684 | Motor cover | |
| 7 | 590685 | Turning motor | |
| 8 | 590702 | Tension spring | |
| 9 | 590833 | Cam curve assembly | |
| 10 | 590686 | Turning motor assembly | |
| 11 | 590688 | Micro switch | |
| 12 | 590687 | Wiring harness | |
| 13 | 590848 | Compression spring | |
| 14 | 590689 | Chain vise | |
| 15 | 590692 | Control panel assembly | |
| 16 | 590691 | PDE bearing | |
| 17 | 590693 | Control unit (PCB) | |
| 18 | 590694 | Bolt M6 x 30 | |
| 19 | 590695 | Stop arm | |
| 20 | 590696 | Wire lifter assembly | |
| 21 | 590859 | Pneumatic valve assembly | |
| 22 | 590697 | Lock axis assembly | |
| 23 | 590718 | Motor housing | |
| 24 | 590858 | Motor cover | |
| 25 | 590714 | Chain pusher motor assembly | |
| 26 | 590832 | Compression spring | |
| 27 | 590700 | Chain pusher plate | |
| 28 | 590720 | Adjuster assembly | |
| 29 | 590839 | Grinding head cover | |
| 30 | 590845 | Grinding wheel guard | |
| 31 | 590840 | Grinding wheel centering knob assembly | |
| 32 | 590841 | Grinding wheel nut | |
| 33 | | Grinding wheel (see page SFS 25) | |
| 34 | 590847 | Turning arm assembly | |
| 35 | 590813 | PDE bearing 10 | |
| 36 | 590814 | Axis | |
| 37 | 590851 | Degree beam | |
| 38 | 590817 | Wire | |
| 39 | 590816 | Ball bearing 6000ZZ | |
| 40 | 590721 | Grinding motor | |
| 41 | 590855 | Adjusting nut | |
| 42 | 590719 | Grinding head assembly | |

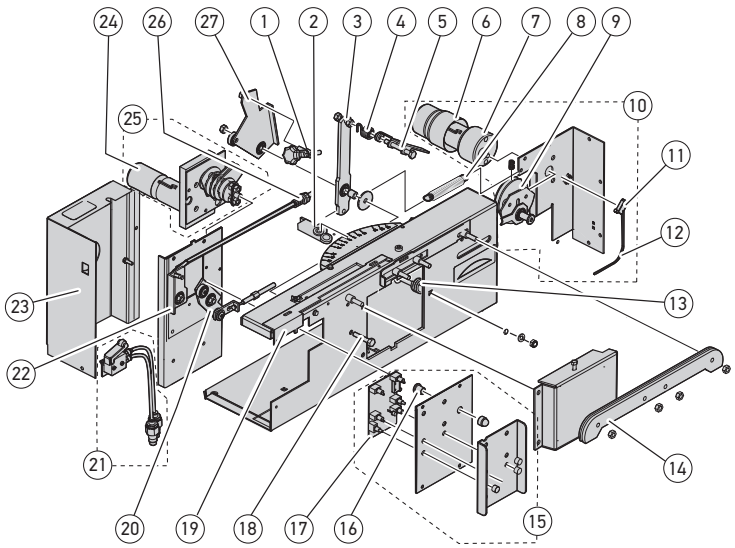


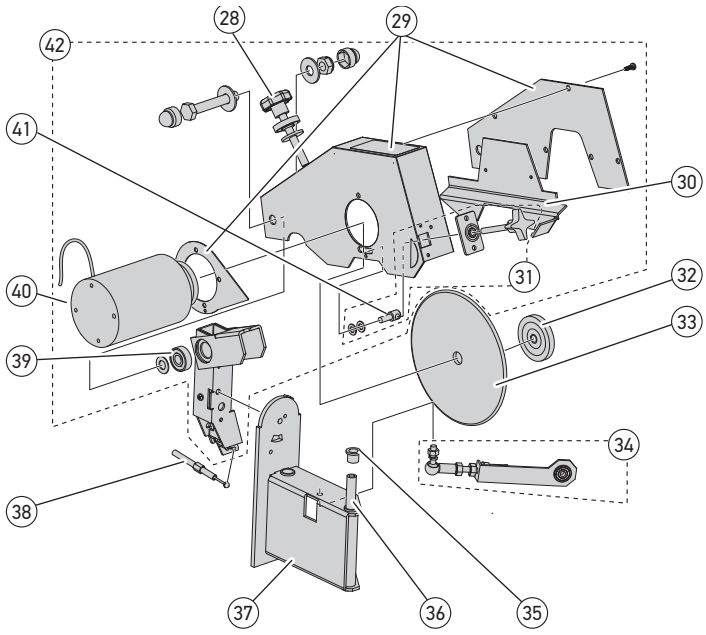


II

# Shop Tools – Saw Chain Grinders

**520-120** Bench

**410-120** Bench / Wall

**310-120** Mini Grinder

**620-120** Hydraulic Assist

**24549B** Rivet Spinner

**24548B** Chain Breaker

## Saw Chain Grinders Comparison Chart

**620-120**
Best

**520-120**
Better

**410-120**
Good

**310-120**
LIght-Duty

### Features

| | 620-120 Best | 520-120 Better | 410-120 Good | 310-120 LIght-Duty |
|---|---|---|---|---|
| Wheel size | 5 3/4" (145 mm) | 5 3/4" (145 mm) | 5 3/4" (145 mm) | 4 1/8" (105 mm) |
| Quantity of wheels included | 3 | 3 | 3 | 2 |
| Max chain pitch size | 3/4" | .404" | .404" | .404" |
| One-way motor operation for safety | ● | ● | ● | ● |
| Dressing brick included | ● | ● | ● | ● |
| Quick-check template included | ● | ● | ● | ● |
| Top-plate angle settings | ● | ● | ● | ● |
| Built-in light | ● | ● | ● | |
| Down angle settings | ● | ● | ● | |
| Self-centering chain vise | ● | ● | ● | ● |
| Hands-free clamp vise operation | ● | | | |

### Electrical Specification

| | | | | |
|---|---|---|---|---|
| Phase | Single | Single | Single | Single |
| Volts | 120V-AC | 120V-AC | 120V-AC | 120V-AC |
| Hertz | 60 | 60 | 60 | 60 |
| Amps | 4.3 | 4.3 | 2.1 | 0.6 |
| Watts | 300 | 300 | 220 | 85 |
| RPM | 3400 | 3400 | 3150 | 4600 |
| Direct-drive motor | Yes | Yes | Yes | Yes |
| Horsepower | 0.4 | 0.4 | 0.29 | 0.11 |
| One-way motor operation | Yes | Yes | Yes | Yes |

II

## 620-120 Hydraulic Assist, Saw Chain Bench Grinder

The 620-Series Saw Chain Grinder features a hydraulic assist clamping vise, eliminating the need to manually tighten and loosen the vise. Providing the convenience and quality you need from a workhorse, high-volume chain grinder, the 620 delivers precision and accuracy on all chain pitches.

| OREGON | Description | Product Code |
|---|---|---|
| 620-120 | Hydraulic Assist,<br>Saw Chain Bench Grinder<br>Single phase, direct-drive, one-way, 120V, 60Hz, 4.3A, 300W, 3400 RPM, 0.4 HP motor. Hydraulic assist chain clamping vise. Grinds 1/4", 3/8" Low Profile™, .325", 3/8", .404", & 3/4" pitch saw chain out of the box. Weight: 21 lbs., height: 19-1/2" | |

| | Included Accessories | For Pitch |
|---|---|---|
| OR534-18 | (1) 5-3/4" Grinding Wheel 1/8" (3.2 mm) thickness | 1/4", 3/8" Low Profile |
| OR534-316 | (1) 5-3/4" Grinding Wheel 3/16" (4.8 mm) thickness | .325", 3/8", .404" |
| OR534-516 | (1) 5-3/4" Grinding Wheel 5/16" (7.9 mm) thickness | 3/4" |
| DB-2 | Dressing Brick | |
| 35596 | Quick Template | |

- Hydraulic assisted for hands-free automatic vise clamping
- All chain type vise capacity
- Wide clamping area
- Optimum grinding accuracy
- Clear markings for easy adjustments

| No. | OREGON | Replacement Parts for 620-120 & 551462 (OBS) | Product Code |
|---|---|---|---|
| 1 | 546949 | Complete Vise Kit | |
| 2 | 546945 | Vise Adjustment Spring | |
| 4 | 546948 | Longer Pawl | |
| 5 | 537412 | Adjustment Knobs Kit | |
| 6 | 546947 | Hydraulic Assist Vise Support | |
| 7 | 537398 | E-Motor, Capacitor, Switch, Cables Kit – 120-Volt (Complete Electrical Assembly) | |
| 8 | 109879 | 115-Volt On / Off Switch | |
| 9 | 537413 | Vise Adjustment Knob Kit | |
| 10 | 537410 | Scales Kit | |
| 11 | 546952 | Cylinder Protection | |
| 12 | 37947 | End Motor Cap | |
| 14 | 537409 | Motor Flange Kit (Outer & Inner) | |
| 15 | 546951 | Arm Support Assembly | |
| 16 | 546946 | Head Return Spring | |
| 17 | 554651 | Wheel Protector Shield | |
| 18 | 105654 | Shield Kit | |
| 19 | 109248 | Wheel Housing Metal Shield | |
| 20 | 108196A | Light Socket E12 w/Wires – 115-Volt | |
| 21 | 105538 | Head Assembly Handle Kit | |
| 22 | 546950 | Complete Hydraulic Assembly | |
| – | 112055 | Light Bulb, 12-Pack (GE #15T7) – Not Shown | |

## 620-120 Replacement Parts Diagram

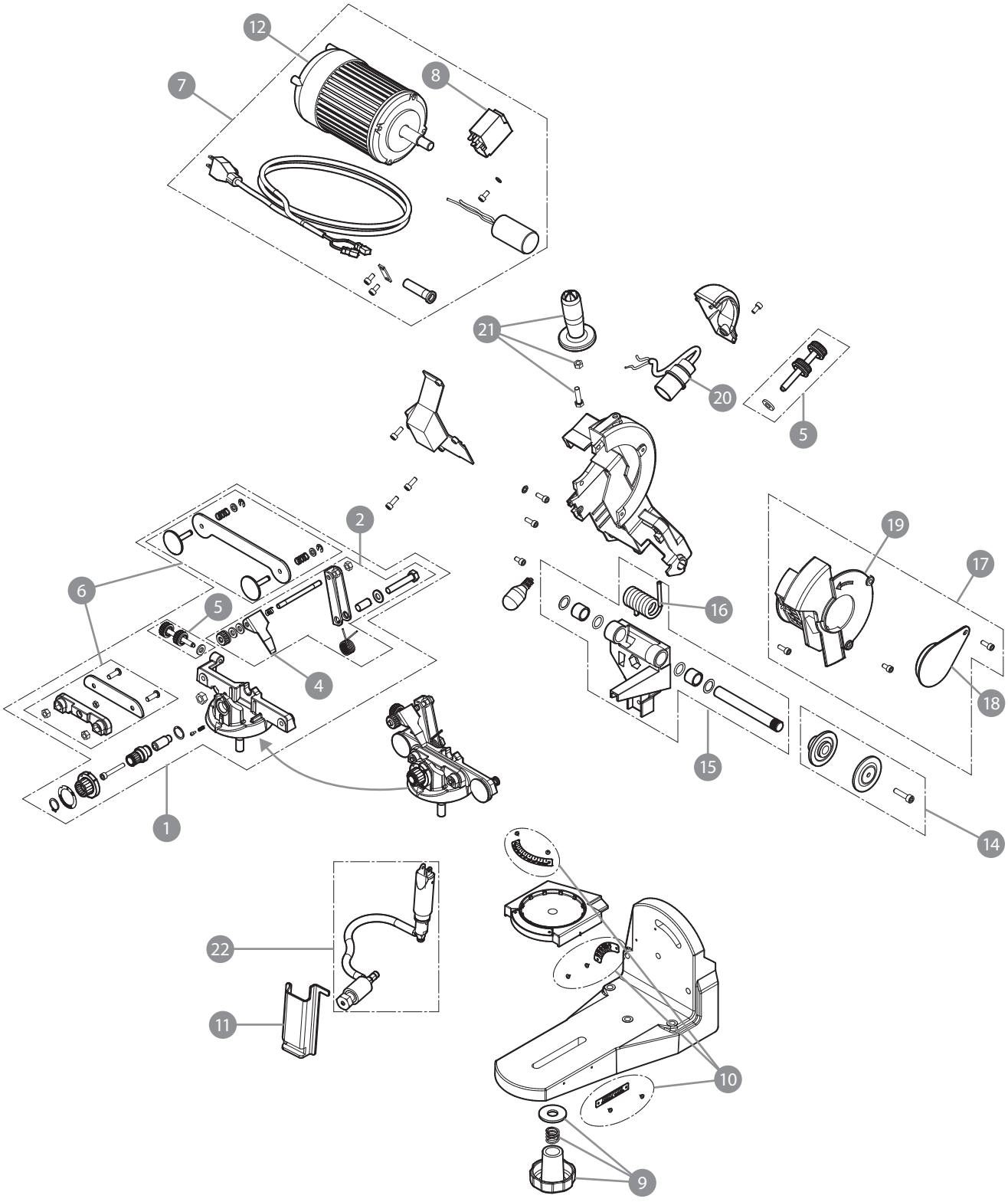

## 520-120 Saw Chain Bench Grinder

Our 520-Series Saw Chain Grinder combines premium quality and ease of use for high-volume sharpening. In addition to a sharp new design, the 520 features a newly engineered vise for improved performance on chains up to .404" pitch*.

| OREGON | Description | Product Code |
|---|---|---|
| 520-120 | Saw Chain Bench Grinder<br>Single phase, direct-drive, one-way, 120V, 60Hz, 4.3A, 300W, 3400 RPM, 0.4 HP motor. Manual chain-clamping vise. Grinds 1/4", 3/8" Low Profile™, .325", 3/8", & .404" pitch saw chain out of the box*. Weight: 20 lbs., height: 19-1/2" | |

| | Included Accessories | For Pitch |
|---|---|---|
| OR534-18 | (1) 5-3/4" Grinding Wheel 1/8" (3.2 mm) thickness | 1/4", 3/8" Low Profile |
| OR534-316 | (1) 5-3/4" Grinding Wheel 3/16" (4.8 mm) thickness | .325", 3/8", .404" |
| OR534-14 | (1) 5-3/4" Grinding Wheel 1/4" (6.4 mm) thickness | Depth gauge grind only |
| DB-2 | Dressing Brick | |
| 35596 | Quick Template | |

- Grinding wheel wear adjustment
- Indexing chain stop assembly
- Motor-head release button
- Longer, self-centering vise
- Forward/aft sliding vise
- Built-in light

*To grind 3/4" pitch saw chain on the 520-120, use Oregon 571887 (3/4" pitch vise adaptor kit) and OR534-516 (5-3/4" dia. grinding wheel). Both are available as separate accessories.

| No. | OREGON | Replacement Parts for 520-120 | Product Code |
|---|---|---|---|
| 1 | 572119 | Vise Assembly | |
| 2 | 537411 | Chain Stop Assembly | |
| 3 | 522688 | Chain Stop | |
| 4 | 32677 | Chain Stop (5-Pack) | |
| 5 | 32681 | Pawl Centering Spring (5-Pack) | |
| 6 | 537412 | Adjustment Knob Kit | |
| 7 | 572202 | Vise Handle Assembly | |
| 8 | 572203 | Vise Jaws | |
| 9 | 537413 | Vise Adjustment Knob Kit | |
| 10 | 522685 | Sliding Support | |
| 11 | 537410 | Scale Kit | |
| 12 | 32678 | Spring & Ball Kit | |
| 14 | 522649 | Arm Support Assembly | |
| 15 | 522651 | Arm Return Spring | |
| 16 | 554651 | Wheel Protector Shield | |
| 17 | 105654 | Wheel Protector Shield Kit | |
| 18 | 109248 | Wheel Housing Metal Shield | |
| 19 | 537409 | Flange Kit | |
| 21 | 109879 | On / Off Switch | |
| – | 37947 | Motor Cap | |
| 23 | 537398 | Complete Electrical Assembly | |
| 24 | 108196A | 115-Volt Light Socket | |
| 25 | 105538 | Head Assembly Handle Kit | |
| | 112055 | Light Bulb, 12-Pack (GE #15T7) - Not Shown | |

## 520-120 Replacement Parts Diagram

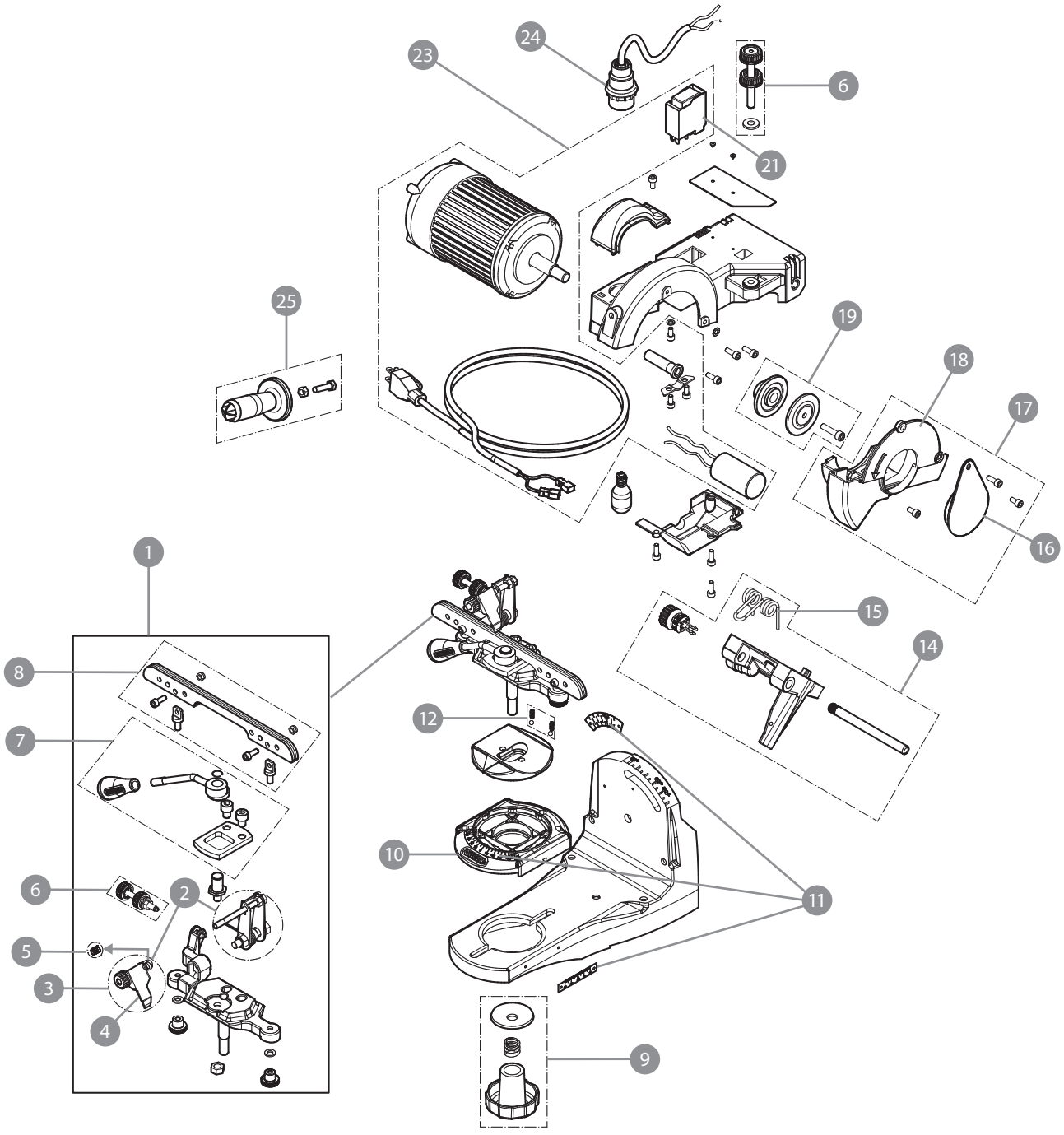

# Shop Tools – Saw Chain Grinders

## 410-120 Mid-Sized Saw Chain Bench Grinder

Introducing the 410-Series, Mid-Size Grinder that provides the quality you can trust from Oregon® at an exceptional value. This grinder mounts to either a bench or wall and sharpens up to .404" pitch chain.

| OREGON | Description | Product Code |
|---|---|---|
| 410-120 | Mid-Sized Saw Chain Bench Grinder<br>Single phase, direct-drive, one-way, 120V, 60Hz, 1.2A, 140W, 3500 RPM, 0.4 HP motor. Manual chain-clamping vise. Grinds 1/4", 3/8" Low Profile™, .325", 3/8", & .404" pitch saw chain out of the box. Weight: 17 lbs., height: 16" | |
| | **Included Accessories** | **For Pitch** |
| OR534-18 | 5-3/4" Grinding Wheel 1/8" (3.2 mm) thickness | 1/4", 3/8" Low Profile |
| OR534-316 | 5-3/4" Grinding Wheel 3/16" (4.8 mm) thickness | .325", 3/8", .404" |
| OR534-14 | 5-3/4" Grinding Wheel 1/4" (6.4 mm) thickness | Depth gauge grind only |
| DB-2 | Dressing Brick | |
| 35596 | Quick Template | |

- Built-in light
- Bench or wall mount
- One-way motor rotation for safe operation
- Easy-to-use adjustments

| No. | OREGON | Replacement Parts for 410-120 | Product Code |
|---|---|---|---|
| 1 | 572119 | Complete Vise Assembly | |
| 2 | 537411 | Chain Stop Vise Assembly | |
| 3 | 522688 | Chain Stop | |
| 4 | 32677 | Chain Stop (5-Pack) | |
| 5 | 32681 | Pawl Center Spring Kit (5-Pack) | |
| 6 | 572522 | Adjustment Knobs Kit | |
| 7 | 572202 | Lever Vise Assembly Chain Locking | |
| 8 | 572203 | Vise Jaws | |
| 9 | 572524 | Vise Locking Kit | |
| 11 | 572525 | Scales | |
| 12 | 32678 | Spring & Ball Kit (2-Pack) | |
| 13 | 572523 | E-Motor, Switch, Cable Kit | |
| 14 | 572526 | End Motor Cap | |
| 15 | 109879 | Switch | |
| 16 | 572527 | Spring Arm Return | |
| 17 | 572529 | Bracket Arm Support | |
| 18 | 105538 | Handle Kit | |
| 19 | 537409 | Motor Flange Kit | |
| 20 | 572528 | Plastic Shield | |

## 410-120 Replacement Parts Diagram

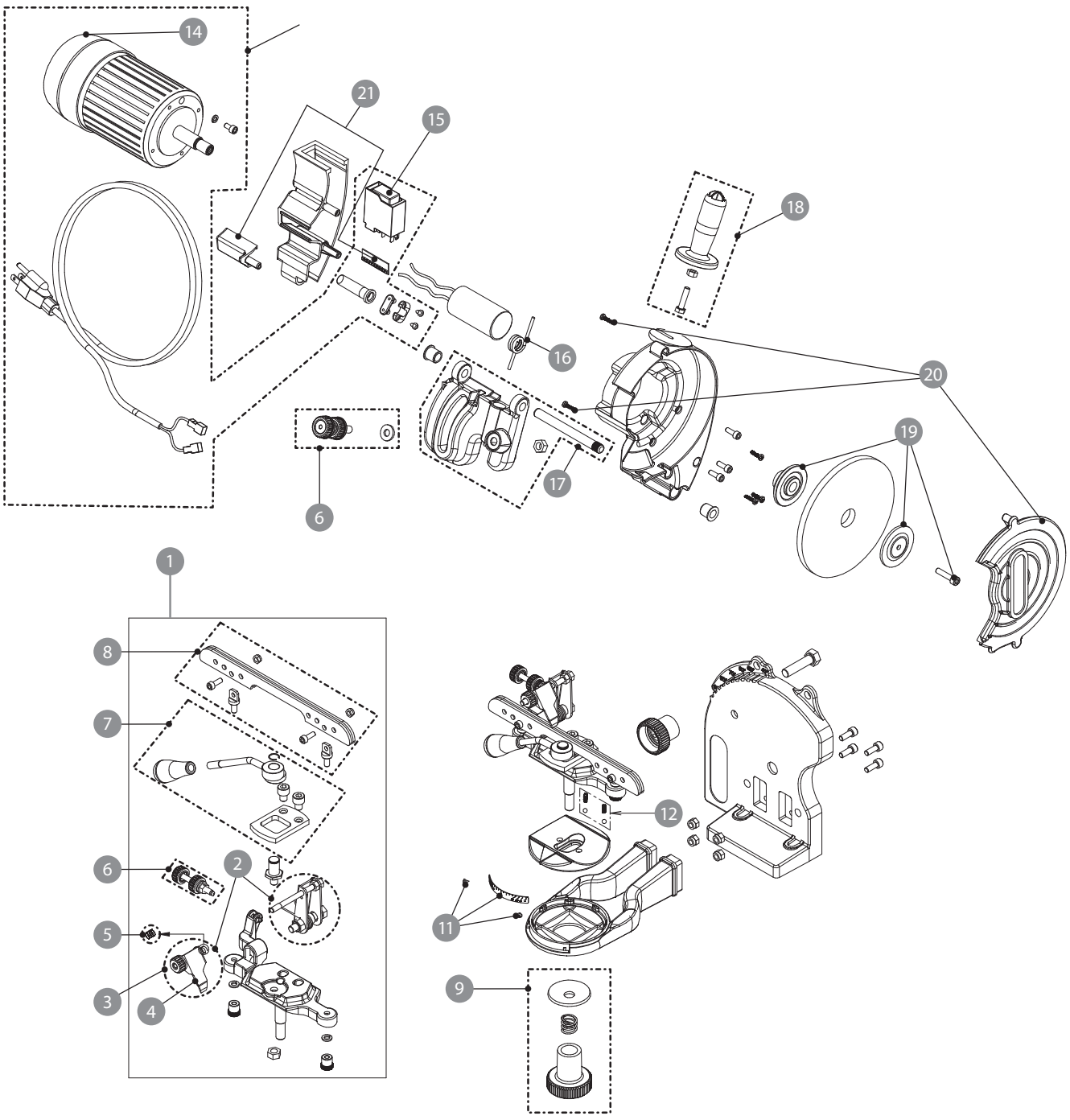

# Shop Tools – Saw Chain Grinders

## 310-120 Light-Duty Saw Chain Bench Grinder

Designed with the occasional user in mind, the compact 310-Series, Consumer Bench Grinder delivers precision results in a very small space and sharpens up to .404" pitch chain.

| OREGON | Description | Product Code |
|---|---|---|
| 310-120 | Light-Duty Saw Chain Bench Grinder<br>Single phase, direct-drive, one-way, 120V, 60Hz, 0.6A, 85W, 4600 RPM, 0.11 HP motor. Manual chain clamping vise. Grinds 1/4", 3/8" Low Profile™, .325", 3/8", & .404" out of the box. Weight: 15 lbs., Height: 13" | |
| | **Included Accessories** | **For Pitch** |
| OR4125-18 | (1) 4-1/8" Grinding Wheel 1/8" (3.2 mm) Thickness | 1/4", 3/8" Low Profile |
| OR4125-316 | (1) 4-1/8" Grinding Wheel 3/16" (4.8 mm) Thickness | .325", 3/8", .404" |
| DB-2 | Dressing Brick | |
| 35596 | Quick Template | |

- The compact alternative to full-size bench grinders that delivers precision results in a very small space.
- Includes two grinding wheels for sharpening 1/4", 3/8" Low Profile, .325", 3/8" pitch and .404" pitch chain
- Runs on standard 115-Volt power
- 2-year limited warranty

## 5-3/4" Grinding Wheels

These high-quality vitrified grinding wheels are specifically designed for use on full-size Oregon® grinders, part numbers: 511AX, 511A, 511A-BC, 510A, 109179, 551462, 620-120, 520-120, 410-120. Oregon wheels resist burning of the cutters and leave a precision finish. Individual display-ready packaging, or unpackaged. 7/8" shaft diameter.

OR534-316

OR534-316A

| OREGON | 5-3/4" Grinding Wheels | For Pitch | Product Code |
|---|---|---|---|
| OR534-18 | 1/8" (3.2 mm) Thickness | 1/4", 3/8" Low Profile | |
| OR534-316 | 3/16" (4.8 mm) Thickness[1] | .325", 3/8", .404" | |
| OR534-14 | 1/4" (6.4 mm) Thickness | Depth gauge only | |
| OR534-516 | 5/16" (7.9 mm) Thickness | 3/4" | |
| | **In Display Package** | | |
| OR534-18A | 1/8" (3.2 mm) Thickness | 1/4", 3/8" low pro | |
| OR534-316A | 3/16" (4.8 mm) Thickness[1] | .325", 3/8", .404" | |
| OR534-14A | 1/4" (6.4 mm) Thickness | Depth gauge only | |
| OR534-516A | 5/16" (7.9 mm) Thickness | 3/4" | |

[1] For 33, 34, 35 series, .325" pitch Oregon chain, use grinding wheel OR534-18

## 4-1/8" Grinding Wheels

These high-quality 4-1/8"-diameter grinding wheels leave a precision finish on saw chain and work with 310-120 and other Oregon® mini grinders. Available in individual display-ready packaging, or unpackaged. 7/8" shaft diameter.

OR4125-316

OR4125-316A

| OREGON | 4-1/8" Grinding Wheels | For Pitch | Product Code |
|---|---|---|---|
| OR4125-18 | 1/8" (3.2 mm) Thickness | 1/4", 3/8" Low Profile™ | |
| OR4125-316 | 3/16" (4.8 mm) Thickness[2] | .325", 3/8", .404" | |
| OR4125-14 | 1/4" (6.4 mm) Thickness | Depth gauge only | |
| | **Display Package** | | |
| OR4125-18A | 1/8" (3.2 mm) Thickness | 1/4", 3/8" Low Profile | |
| OR4125-316A | 3/16" (4.8 mm) Thickness[2] | .325", 3/8", .404" | |
| OR4125-14A | 1/4" (6.4 mm) Thickness | Depth gauge only | |

[2] For 33, 34, 35 series, .325" pitch Oregon chain, use grinding wheel OR4125-18

## Wheel Dressing Tools

Dressing Brick and Quick Template work with both 5-3/4" and 4-1/8" Grinding Wheels

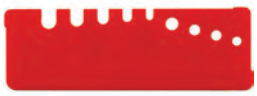

| OREGON | Description | Product Code |
|---|---|---|
| DB-2 | Dressing Brick | |
| 35596 | Quick Template | |

II

## Grinder Stand

A sturdy, long lasting stand that allows any of the Oregon bench-type chain grinders to be set up and used virtually anywhere. Height adjustable from 44" to 53.5" and compatible with all Oregon Bench Grinders. This stand breaks down for easy shipping and is simple to assemble.

| OREGON | Description | Product Code |
|---|---|---|
| 554532 | Tripod Grinder Stand | |

## Compact Electric Rivet Spinner

Exclusively from Oregon®, a heavy-duty, bench-mounted Compact Electric Rivet Spinner that provides professional spin results while saving time and labor.

| OREGON | Description | Product Code |
|---|---|---|
| 552225 | Compact Electric Rivet Spinner | |
| | **Included Accessories** | |
| 545724 | "A" Anvil and Spin Roll Set<br>For 3/8" and .404" chain | |
| 545725 | "B" Anvil and Spin Roll Set<br>For 90, 91, 1/4" and .325" chain | |

- Professional results
- Compact bench-mounted design
- Unobstructed spin area
- Easy, continuous operation
- Fully equipped

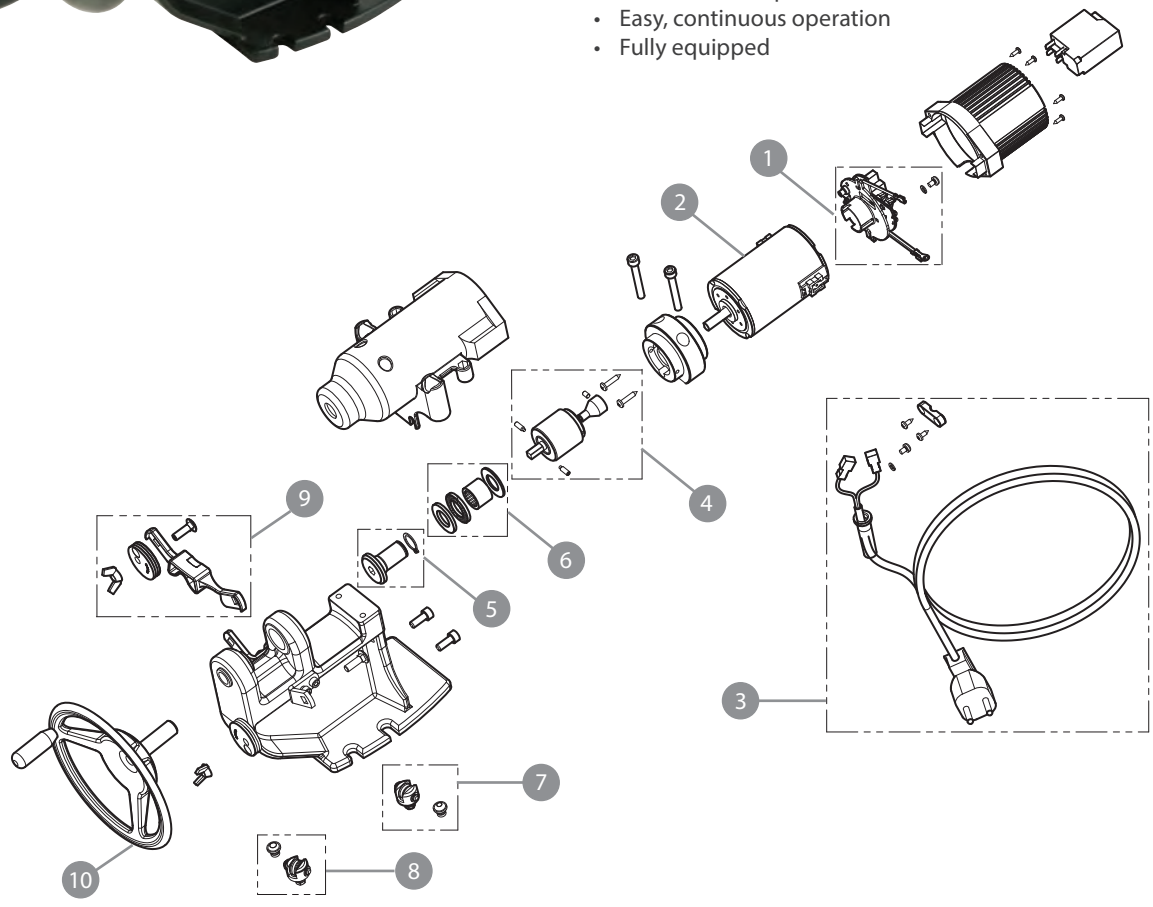


| OREGON | No. | Replacement Parts for 552225 | Product Code |
|---|---|---|---|
| 545606 | 1 | E-Card Power Rivet Spinner | |
| 545608 | 2 | E-Motor 120-Volt AC | |
| 545720 | 3 | 120-Volt AC Feeding Cable | |
| 545721 | 4 | Planetary Gears Set | |
| 545722 | 5 | Threaded Bushing/w Thrust Washers | |
| 545723 | 6 | Thrust Needle Bearings Set | |
| 545724 | 7 | Spin Roll 3/8" – .404" | |
| 545725 | 8 | Spin Roll 1/4", 3/8" Low Profile, .325" | |
| 545726 | 9 | Chain Support Disc | |
| 545727 | 10 | Take-Up Thrust Wheel | |

## Bench Model Chain Breaker & Replacement Parts

A stand out in any shop, the Oregon® Bench Model Chain Breaker introduces a fresh look and new ergonomic handle to punch out any 1/4", 3/8" Low Profile™, .325", 3/8", or .404" pitch saw chain rivet.

| OREGON | Description | Product Code |
|---|---|---|
| 24548B | Bench Model Chain Breaker | |
| | **Included Accessories** | |
| 38594 | Standard Punch | |
| 109644 | Punch for 90-Series Chain (.043" gauge) | |
| 111939 | Anvil for 1/4", 3/8" Low Profile, .325", 3/8", & .404" Chain | |

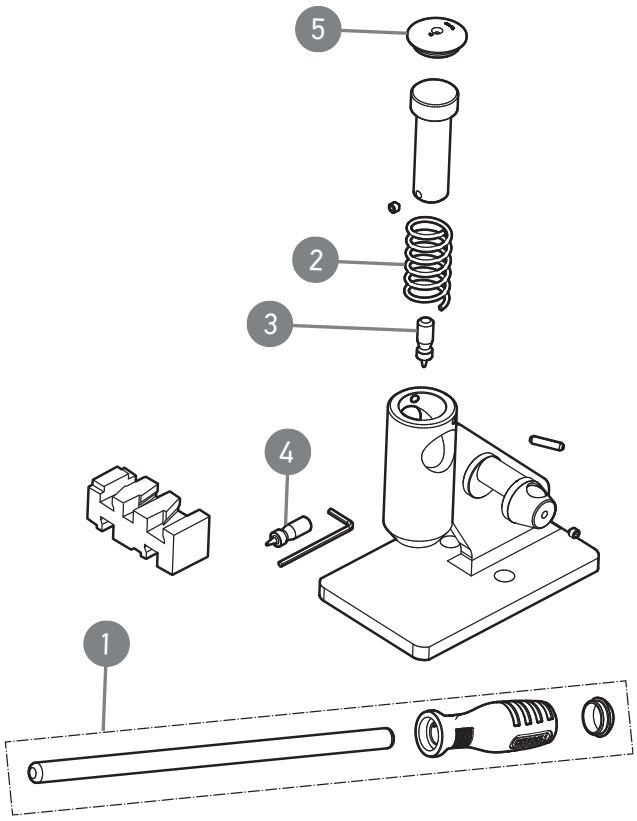


| OREGON | No. | Replacement Parts for 24548B & 24548A (OBS) | Product Code |
|---|---|---|---|
| 572121 | 1 | Handle Assembly | |
| 38593 | 2 | Spring | |
| 38594 | 3 | Punch for 1/4", 3/8 Low Profile, .325", 3/8", & .404" Chain | |
| 109644 | 4 | .043" Punch (Not Shown) for 3/8" Low Profile Chain | |
| 38595 | 5 | Cap | |
| 111939 | 6 | 5-Slot Anvil | |
| 26870 | – | Punch – Older, Cast-Style Breaker (Not Shown, P/N 24548) | |

## Bench Model Rivet Spinner

The new Bench Model Rivet Spinner features the same durable quality and performance you've come to expect from Oregon®, but features a new look and upgraded handle design. Produces consistent rivet spins and minimizes risk of chain breakage. Complete unit includes "A" & "B" anvils and "A" & "B" take-up handles that service up to .404" pitch chain.

| OREGON | Description | Product Code |
|---|---|---|
| 24549B* | Bench Model Rivet Spinner | |
| | **Parts Included** | |
| 38597 | "A" Anvil<br>3/8" & .404" Saw Chain | |
| 38598 | "B" Anvil<br>1/4", 3/8" Low Profile™, & .325" Saw Chain | |
| 38599 | "A" Take-Up Handle | |
| 38600 | "B" Take-Up Handle | |

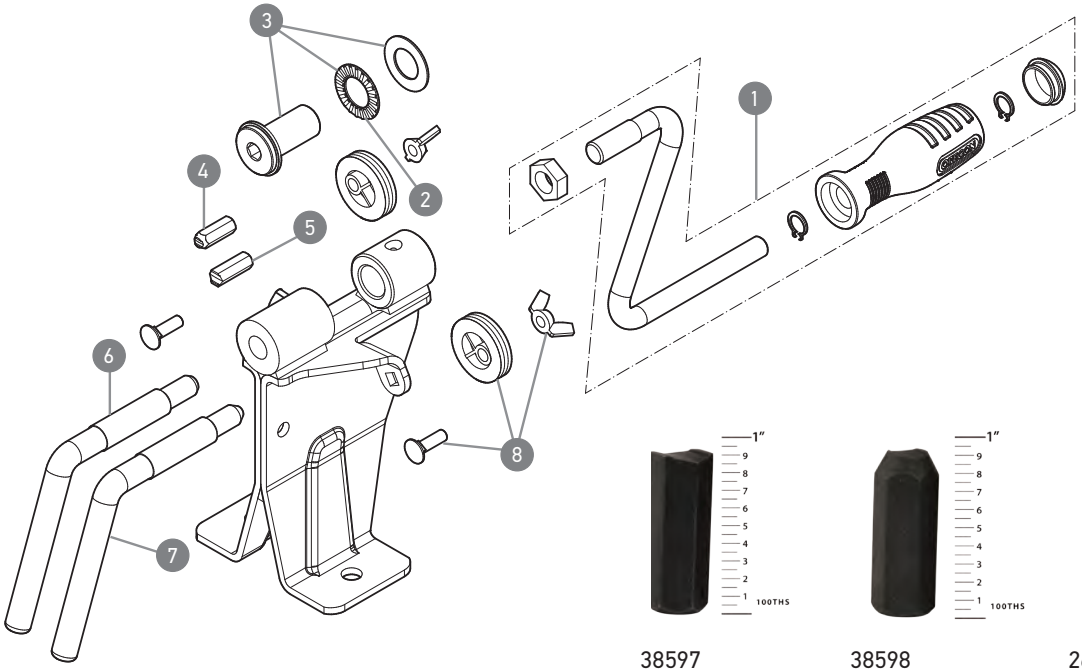

38597 38598 26889 26890

| OREGON | No. | Replacement Parts for 24549B & 24549A (OBS) | Product Code |
|---|---|---|---|
| 572120 | 1 | Spinner Handle Assembly | |
| 38605 | 2 | Thrust Bearing | |
| 38604 | 3 | Sleeve | |
| 38597 | 4 | "A" Anvil for 3/8" & .404" Pitch | |
| 38598 | 5 | "B" Anvil for 1/4", 3/8" Low Profile, & .325" Pitch | |
| 38599 | 6 | "A" Take-Up Handle for 3/8" & .404" Pitch | |
| 38600 | 7 | "B" Take-Up Handle for 1/4", 3/8" Low Profile, & .325" Pitch | |
| 38603 | 8 | Chain Support Disc | |
| 26889 | | "A" Anvil – Older, Cast Style Spinner (P/N 24549) for 3/8" & .404" Pitch | |
| 26890 | | "C" Anvil – Older, Cast Style Spinner (P/N 24549) for 1/4", 3/8" Low Profile, & .325" Pitch | |

## Heavy-Duty Chain Breaker & Bar Nose Rivet Driver

Another heavy-weight champion of service tools from Oregon®. This multi-purpose tool breaks all chain pitches, including 3/4", and can also be used to drive out bar nose rivets, including the nose rivets on big 3/4" pitch harvester bars. Heavy-duty materials and top-quality components are used throughout, and replacement parts are available separately to keep this ultimate shop tool in service for a long time. Punches for all chain pitches are included. Anvil for 3/4" pitch chain must be purchased separately.

| OREGON | Description | Product Code |
|---|---|---|
| 24548-si | Heavy-Duty Chain Breaker | |
| | **Parts Included** | |
| 110436si | Punch Holder | |
| 38594 | Standard Chain Punch for Chain Pitches: 1/4", 3/8 Low Profile™, .325", 3/8", & .404" | |
| 110438si | 3/4" Pitch Chain Punch | |
| 102623si | Bar Nose Rivet Punch | |
| 111939 | Breaker Anvil | |
| | **Optional Components** | |
| 505033 | Breaker Anvil for Harvester Bar Noses | |
| 25049 | Breaker Anvil, 3/4" Pitch Chain | |

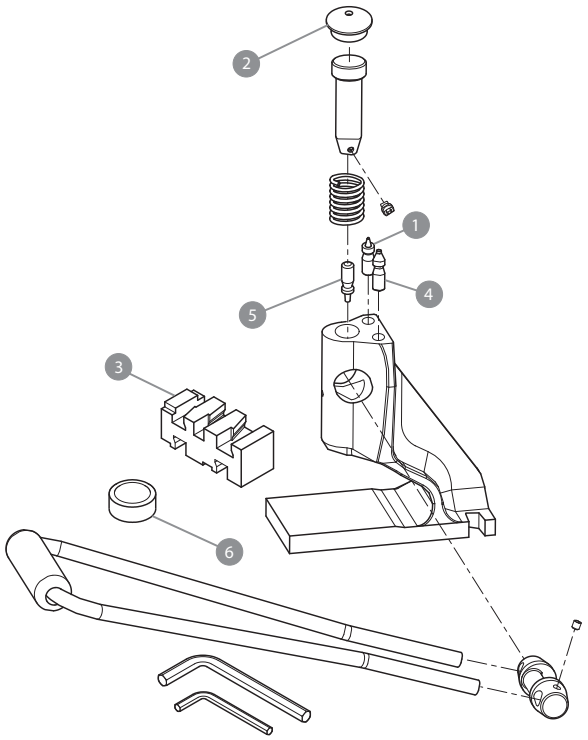


| OREGON | No. | Replacement Parts for 24548-si | Product Code |
|---|---|---|---|
| 38594 | 1 | Standard Chain Punch for Chain Pitches: 1/4", 3/8 Low Profile, .325", 3/8", & .404" | |
| 38595 | 2 | Cap | |
| 111939 | 3 | 5-Slot Breaker Anvil | |
| 110438si | 4 | 3/4" Pitch Chain Punch | |
| 102623si | 5 | Bar Nose Rivet Punch | |
| 505033 | 6 | Breaker Anvil for Harvester Bar Noses | |

# Shop Tools – Saw Chain Spinners & Breakers

## Heavy-Duty Rivet Spinner

The heavy-weight champion of hand-operated rivet spinners. Designed to meet all rivet spinning needs. Spins all chain rivets up to .404" pitch, and adapts easily for spinning 3/4" rivets when used with the 3/4" pitch adapter kit below.

| OREGON | Description | Product Code |
|---|---|---|
| 24549-si | Heavy-Duty Rivet Spinner – Metric | |
| | **Parts Included** | |
| 38597 | "A" Anvil for 3/8" and .404" Saw Chain (38597 Fits Both SAE & Metric Spinners) | |
| 38598 | "B" Anvil for 1/4", 3/8" Low Profile™, & .325" Saw Chain (38598 Fits Both SAE and Metric Spinners) | |
| 108780si | "A" Take-Up Handle | |
| 108781si | "B" Take-Up Handle | |

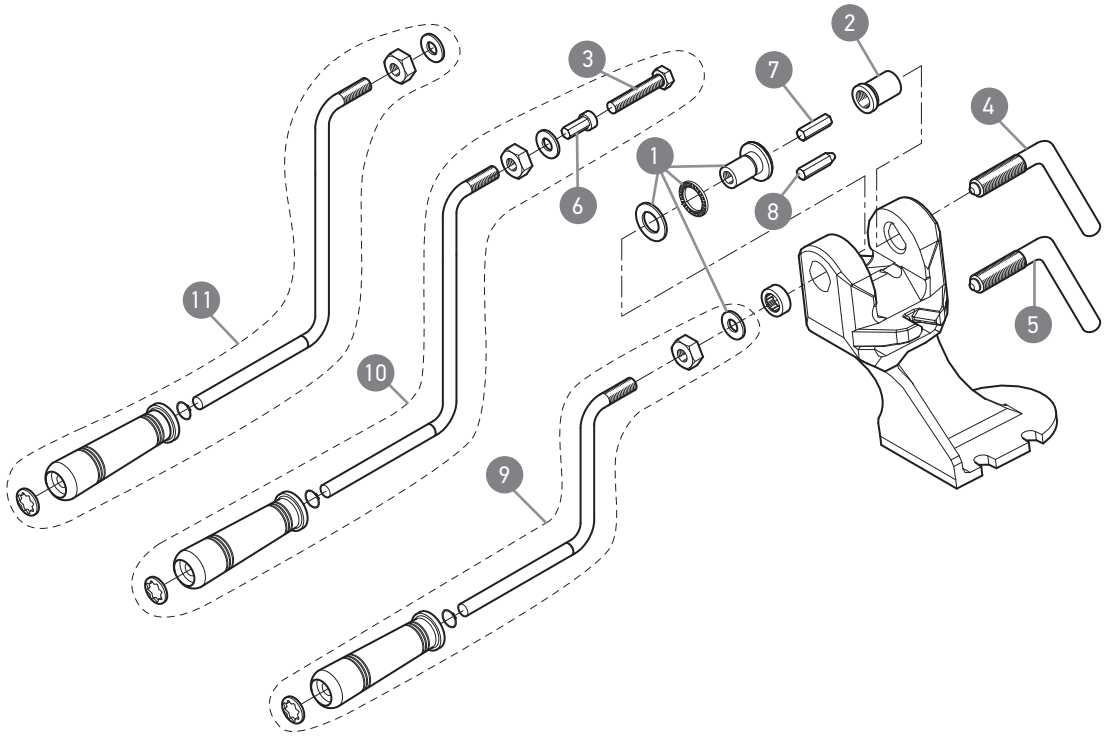


| OREGON | No. | Replacement Parts for 24549-si (Metric) | Product Code |
|---|---|---|---|
| 108777si | 1 | Anvil Drive Bushing | |
| 108778si | 2 | Threaded Bushing | |
| 108789si | 3 | Take-Up Bolt Hex End | |
| 108780si | 4 | Take-Up Handle (A) for 3/8" & .404" Saw Chain | |
| 108781si | 5 | Take-Up Handle (B) for 1/4", 3/8" Low Profile™, &.325" Saw Chain | |
| 108790si | 6 | 3/4" Pitch Spinner Anvil | |
| 38597 | 7 | Spinner Anvil (A) for 3/8" & .404" Saw Chain | |
| 38598 | 8 | Spinner Anvil (B) for 1/4", 3/8" Low Profile, &.325" Saw Chain | |
| 108779si | 9 | Handle Assembly | |
| 108742si | 10 | 3/4" Pitch Adapter Kit | |
| 108788si | 11 | Extra-Long Handle | |

## 3/4" Pitch Rivet Spinner Adaptor Kit

Enables spinning of 3/4" pitch chain rivets on the Oregon® Bench Model Rivet Spinner P/N 24549A and 24549B.

| OREGON | Description | Product Code |
|---|---|---|
| 100871 | 3/4" Pitch Rivet Spinner Adaptor Kit, Includes: (1) Anvil, (1) Grease Gun, (1) Spinner Handle Adaptor | |

## Heavy-Duty Rivet Spinner – 3/4" Pitch Rivet Spinner Adaptor Kits

Enables spinning of 3/4" pitch chain rivets on the Heavy-Duty Rivet Spinners, P/Ns 24549-s (an obsoleted SAE Rivet Spinner) and 24549-si. This metric adaptor kit includes: one anvil, one take-up bolt, and one extra long handle.

| OREGON | Description | Product Code |
|---|---|---|
| 108742si | 3/4" Pitch Rivet Spinner Adaptor Kit – Metric | |

## Adjustable Anvil

For use with 90, 91, 1/4", 3/8" Low Profile™, .325", 3/8"and .404" pitch chains. This universal tool securely holds all brands and chain pitches up to .404".

| OREGON | Description | Product Code |
|---|---|---|
| 105530 | Adjustable Anvil for Use with 1/4", 3/8" Low Profile, .325", 3/8", & .404" Saw Chain | |

## Chain Scale

This reference chart provides a quick link count for 1/4", 3/8" Low Profile .325", 3/8", .404", and 3/4" pitch chains. Shipped in three sections, this time-saver can be customized to meet various lengths of chain.

| OREGON | Description | Product Code |
|---|---|---|
| 533129 | Quick-Reference Chain Scale | |

## Pocket Chain Breaker

39470

- Easy to use
- Breaks 90, 91, 1/4", 3/8" Low Profile, .325", 3/8", & .404" pitch chains

| OREGON | Description | Product Code |
|---|---|---|
| 39472 | Anvil and Punch Assembly for 1/4", 3/8" Low Profile, .325", 3/8", & .404" Saw Chain – Display Pack | |
| 39470 | Punch, for Assembly 39472 | |

## 109182 Power Rivet Spinner (Obsolete)

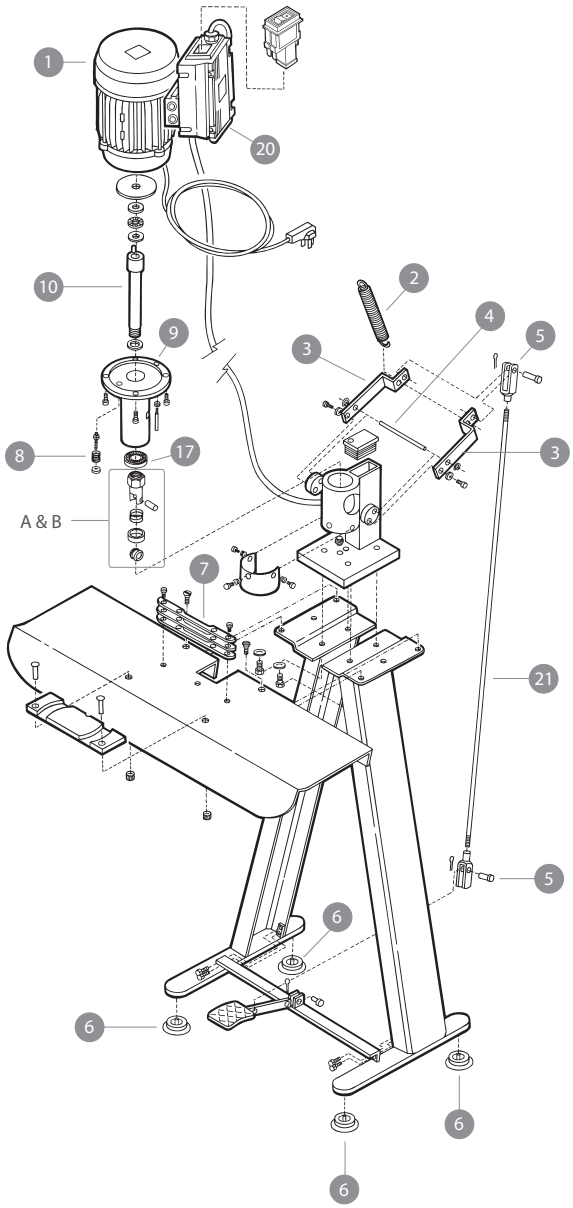


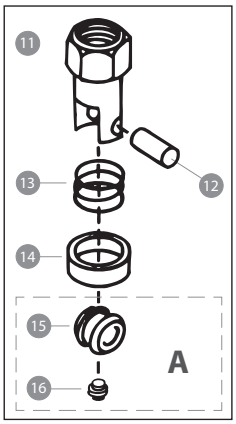


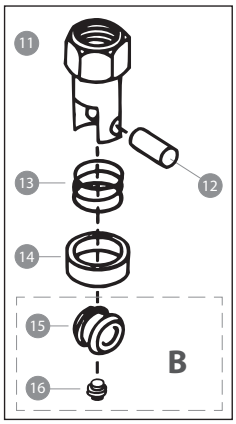


| OREGON | No. | Description | Product Code |
|---|---|---|---|
| | 2 | Spring, Actuation Lever Return | |
| | 3 | Bracket, Actuation Mechanism | |
| 109276 | 4 | Shaft, Actuation Mechanism | |
| | 5 | Clevis Fitting Kit | |
| 109280 | 7 | Guard Plate, Chain Position | |
| | 9 | Housing, Actuation Shaft | |
| | 10 | Shaft, Tool Actuation | |
| | 17 | Shaft Bearing, Lower | |
| 109879 | 20 | Power Switch | |
| | | **Kits for 3/8" & .404" Pitch** | |
| 109284 | A | 15A, 16A, 11, 12, 13, & 14 | |
| 109281 | 15A | Rivet Tool, Rotating Position | |
| 111039 | 16A | Rivet Tool, Stationary Position | |
| 112255 | B | 15B, 16B, 11, 12, 13, & 14 | |
| | | **Kits for 1/4", 3/8" Low Profile™ & .325" Pitch** | |
| 109281 | 15B | Rivet Tool, Rotating Position | |
| 111039 | 16B | Rivet Tool, Stationary Position | |
| | 12 | Clevis Pin, Rivet Tool | |
| | 13 | Tension Spring, Rivet Tool, Rotating | |

Part numbers printed in *red* have been obsoleted. Contact your authorized Oregon® distributor for availability.

## 109179 Bench Grinder with Hydraulic Assist (Obsolete)

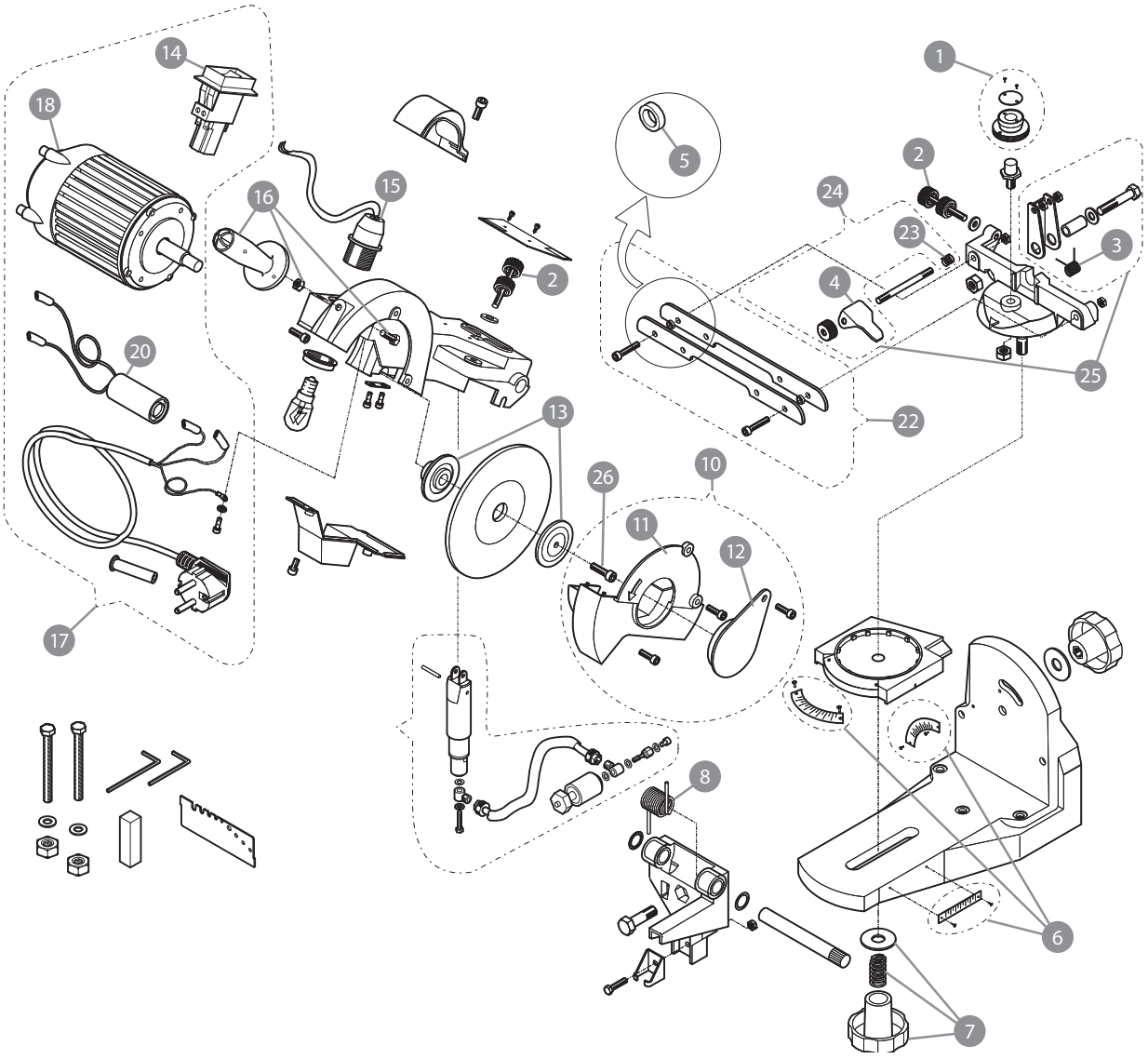


| OREGON | No. | Description | Product Code |
|---|---|---|---|
| 109247 | 1 | Adjustment Cam, Vise Position | |
| 537412 | 2 | Adjustment Knob Kit | |
| 32677 | 4 | Chain Stop (5-Pack)<br>(p/n 522688, Chain Stop – Single) | |
| 35610 | 5 | Chain Vise Spacers (2-Packs) | |
| 537410 | 6 | Scales Kit | |
| 537413 | 7 | Vise Adjustment Knob Kit | |
| 110703 | 8 | Spring, Arm Return | |
| 554651 | 10 | Shield Wheel Protector | |
| 109248 | 11 | Metal Shield, Wheel Housing | |
| 105654 | 12 | Plastic Shield Kit | |
| 537409 | 13 | Motor Flange Kit (Outer & Inner) | |

| OREGON | No. | Description | Product Code |
|---|---|---|---|
| 109879 | 14 | Switch 115-Volt, On / Off (New Type) | |
| 108196A | 15 | Light Socket E12 w/ Wires –120-Volt | |
| 105538 | 16 | Handle Kit, Head Assembly | |
| 537398 | 17 | E-Motor, Capacitor, Switch, Cables<br>Kit – 120-Volt | |
| 37947 | 18 | End Motor Cap | |
| 534549 | 22 | Vise Jaws Assembly Kit | |
| 32681 | 23 | Pawl Center Spring Kit (5-Pack) | |
| 522688 | 24 | Chain Stop Single<br>(p/n 32677, 5-Pack) | |
| 537411 | 25 | Chain Stop Assembly Kit | |
| 35584 | 26 | Screw | |

## 511AX Bench Grinder (Obsolete)

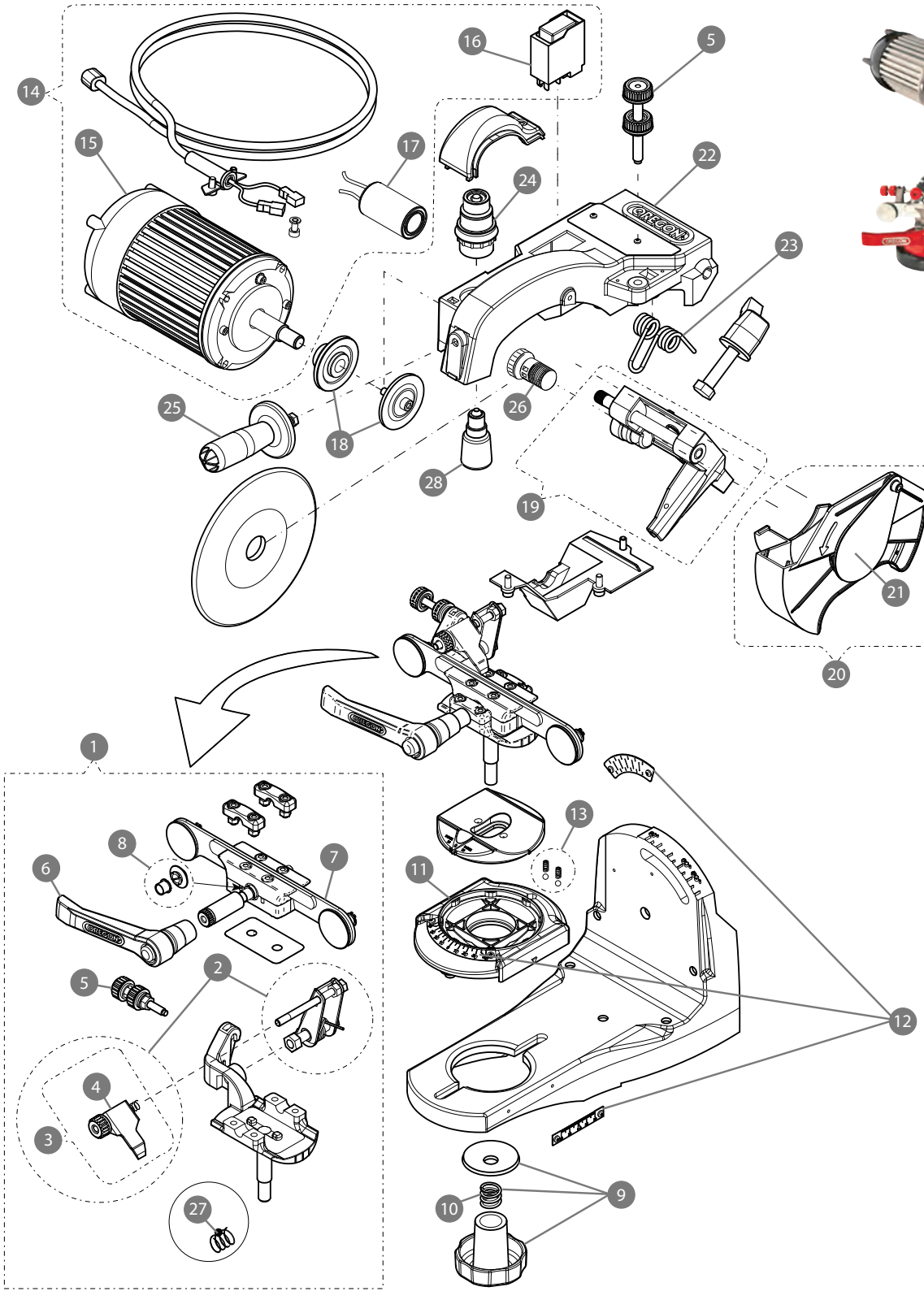

## 511AX Bench Grinder (Obsolete)

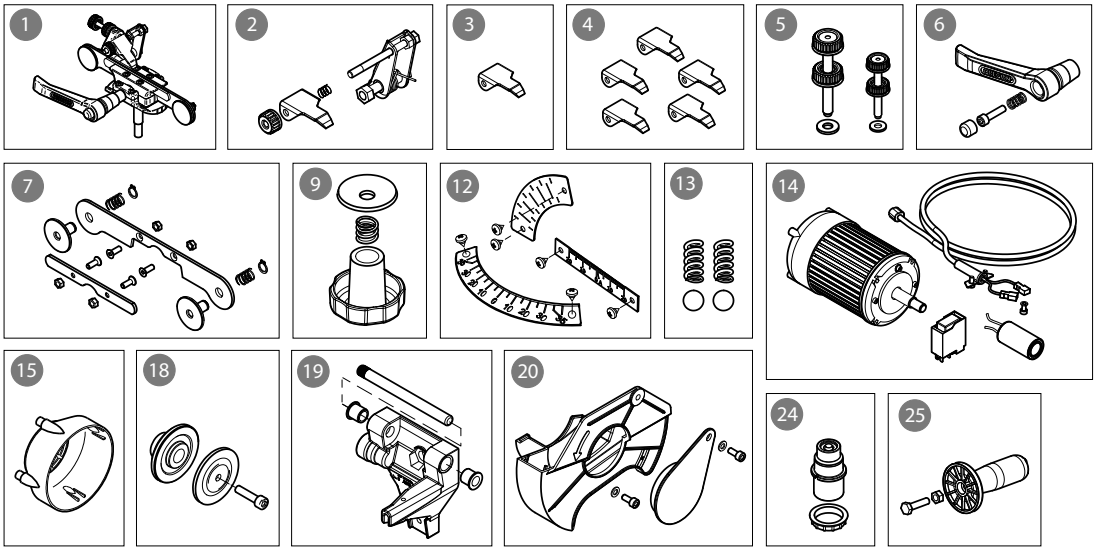


| OREGON | No. | Description | Product Code |
|---|---|---|---|
| 526265 | 1 | Complete Vise Assembly | |
| 537411 | 2 | Chain Hold Kit 511AX | |
| 522688 | 3 | Chain Stop Single (p/n 32677, 5-Pack) | |
| 32677 | 4 | Chain Stop (5-Pack) | |
| 537412 | 5 | Adjustment Knobs, Kit | |
| 522689 | 6 | Lever, 511AX Vise Assembly Chain Locking | |
| 526267 | 7 | Vise Jaws, 511AX Vise Assembly | |
| 522691 | 8 | Vise Bushing, 511AX Vise Assembly | |
| 537413 | 9 | Vise Locking Kit | |
| 522685 | 11 | Sliding Support 511AX | |
| 537410 | 12 | 511AX Scales Kit | |
| 32678 | 13 | Spring and Ball Kit | |
| 537398 | 14 | E-Motor, Capacitor, Switch, Cables Kit | |
| 37947 | 15 | End Motor Cap | |
| 109879 | 16 | Switch 115-Volt (New Type) | |
| 537409 | 18 | Motor Flange Kit (Outer & Inner) | |
| 522649 | 19 | Bracket, 511AX Arm Support | |
| 105654 | 20 | Shield Wheel Protector | |
| 522692 | 21 | Shield Kit | |
| 522650 | 22 | Arm, 511AX Complete | |
| 522651 | 23 | Spring, 511AX Arm Return | |
| 108196A | 24 | Light Socket E12 w/ Wires | |
| 105538 | 25 | Handle Kit | |
| 522670 | 26 | Safety Pin, 511AX | |
| 32681 | 27 | Pawl Center Spring Kit (5-Pack) | |
| 112055 | 28 | Light Bulb, 12-Pack (GE #15T7) | |

# Shop Tools – Replacement Parts for Obsolete Tools

## 511A Bench Grinder (Obsolete)

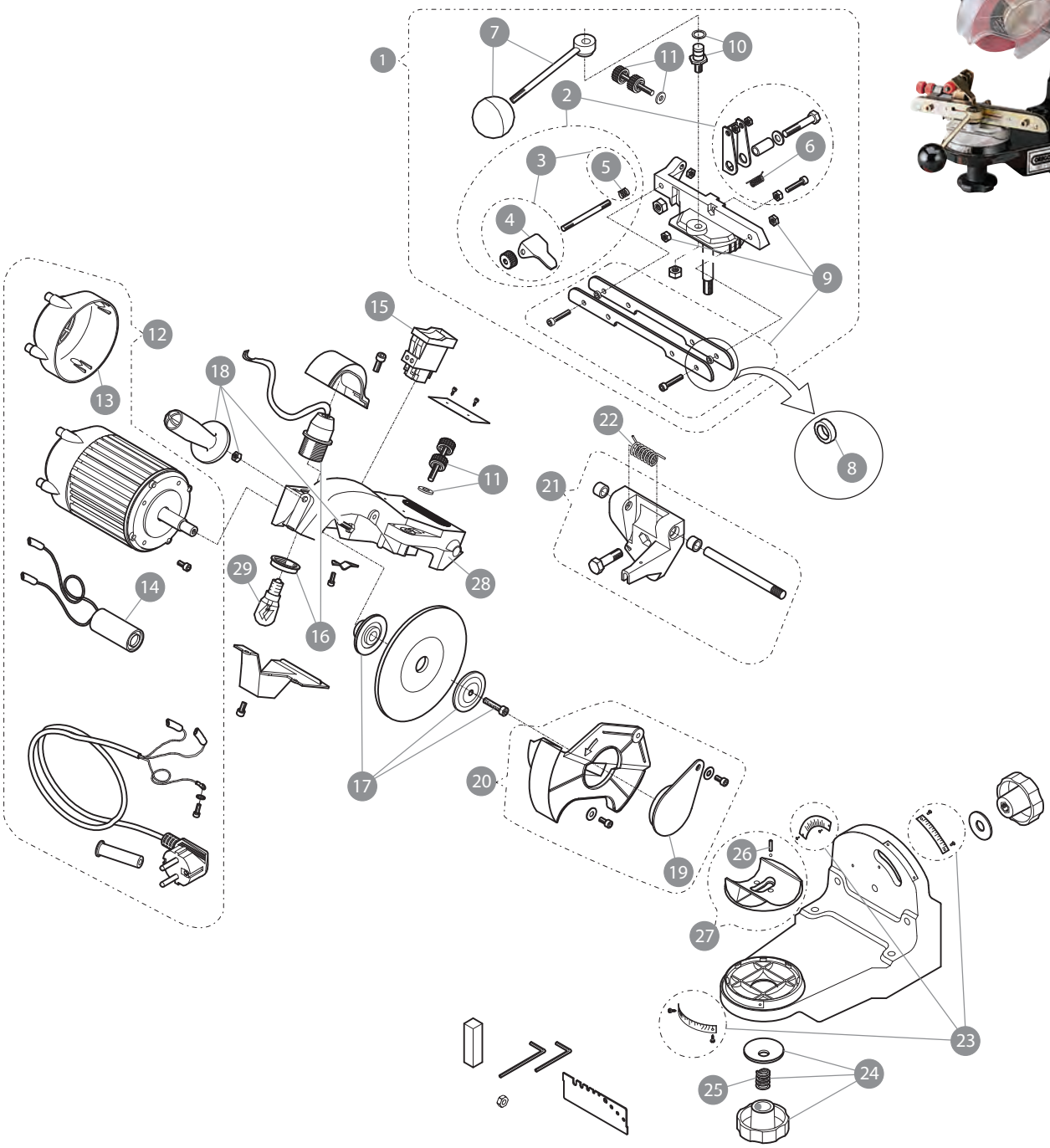


II

## 511A Bench Grinder (Obsolete)

| OREGON | No. | Description | Product Code |
|---|---|---|---|
| 110597 | 1 | Complete Vise Assembly | |
| 537411 | 2 | Chain Hold Kit 511AX | |
| 32677 | 3 | Chain Stop (5-Pack) | |
| 522688 | 4 | Chain Stop Single (p/n 32677, 5-Pack) | |
| 32681 | 5 | Pawl Center Spring Kit (5-Pack) | |
| 534550 | 7 | Vise Handle | |
| 35610 | 8 | Chain Vise Spacers | |
| 534549 | 9 | Vise Jaws | |
| 37951 | 10 | Cam Post | |
| 537412 | 11 | Adjustment Knobs, Kit | |
| 37947 | 13 | End Motor Cap | |
| 109879 | 15 | Switch 115-Volt (New Type) | |
| 108196A | 16 | Light Socket E12 w/ Wires | |
| 537409 | 17 | Motor Flange Kit (Outer & Inner) | |
| 105538 | 18 | Handle Kit | |
| 105654 | 19 | Shield Kit | |
| 522692 | 20 | Shield Wheel Protector | |
| 522649 | 21 | Bracket, 511AX Arm Support (from 2008) | |
| 35589 | 22 | Spring | |
| 537410 | 23 | 511AX Scales Kit | |
| 537413 | 24 | Vise Locking Kit | |
| 32678 | 26 | Spring & Ball Kit | |
| 104874 | 27 | Flange & Nut | |
| 522650 | 28 | Arm, 511AX Complete | |
| 112055 | 29 | Light Bulb, 12-Pack (GE #15T7) | |

## 510A Bench Grinders (Obsolete)

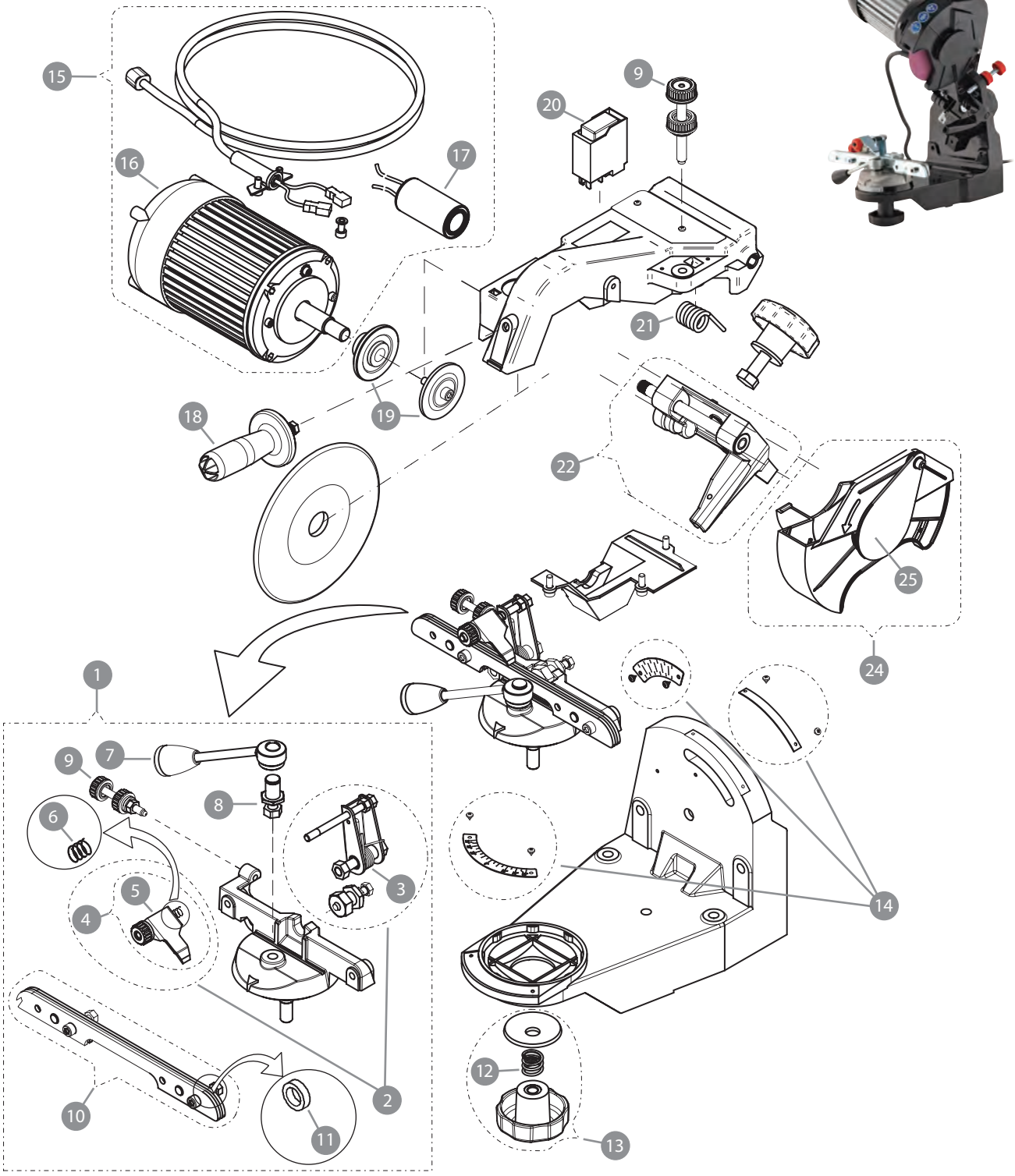

## 510A Bench Grinders (Obsolete)

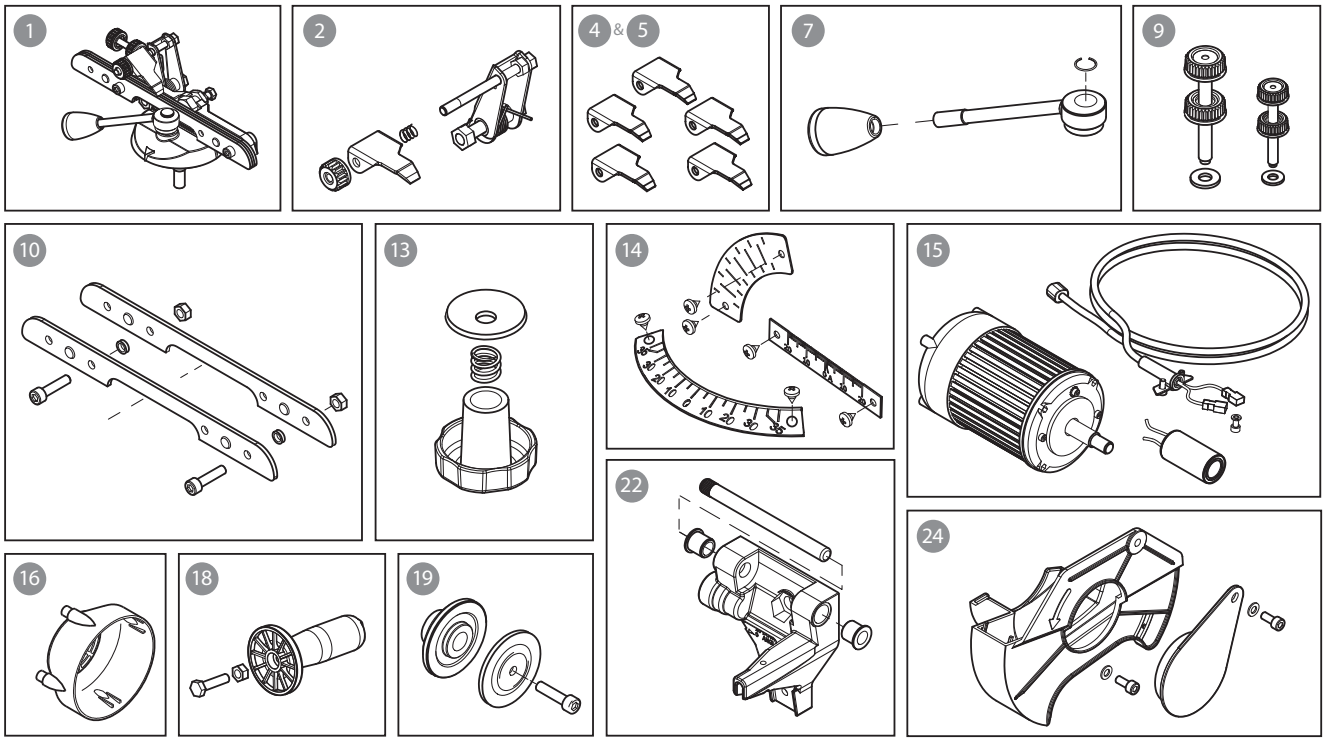


| OREGON | No. | Description | Product Code |
|---|---|---|---|
| 534477 | 1 | Vise Assembly | |
| 537411 | 2 | Chain Hold Kit 511AX | |
| 522688 | 4 | Chain Stop Single (p/n 32677, 5-Pack) | |
| 32677 | 5 | Chain Stop (5-Pack) | |
| 32681 | 6 | Pawl Center Spring Kit (5-Pack) | |
| 534550 | 7 | Vise Handle | |
| 37951 | 8 | Cam Post | |
| 537412 | 9 | Adjustment Knobs, Kit | |
| 534549 | 10 | Vise Jaws | |
| 35610 | 11 | Chain Vise Spacers | |
| 537413 | 13 | Vise Locking Kit | |
| 537410 | 14 | 511AX Scales Kit | |
| 37947 | 16 | End Motor Cap | |
| 105538 | 18 | Handle Kit | |
| 537409 | 19 | Motor Flange Kit (Outer & Inner) | |
| 109879 | 20 | Switch, 115-Volt (New Type) | |
| 35589 | 21 | Spring | |
| 522649 | 22 | Bracket, 511AX Arm Support | |
| 105654 | 24 | Shield Wheel Protector | |
| 522692 | 25 | Shield Kit | |

## 108181 115-Volt Bench-Mounted Mini Grinder (Obsolete)

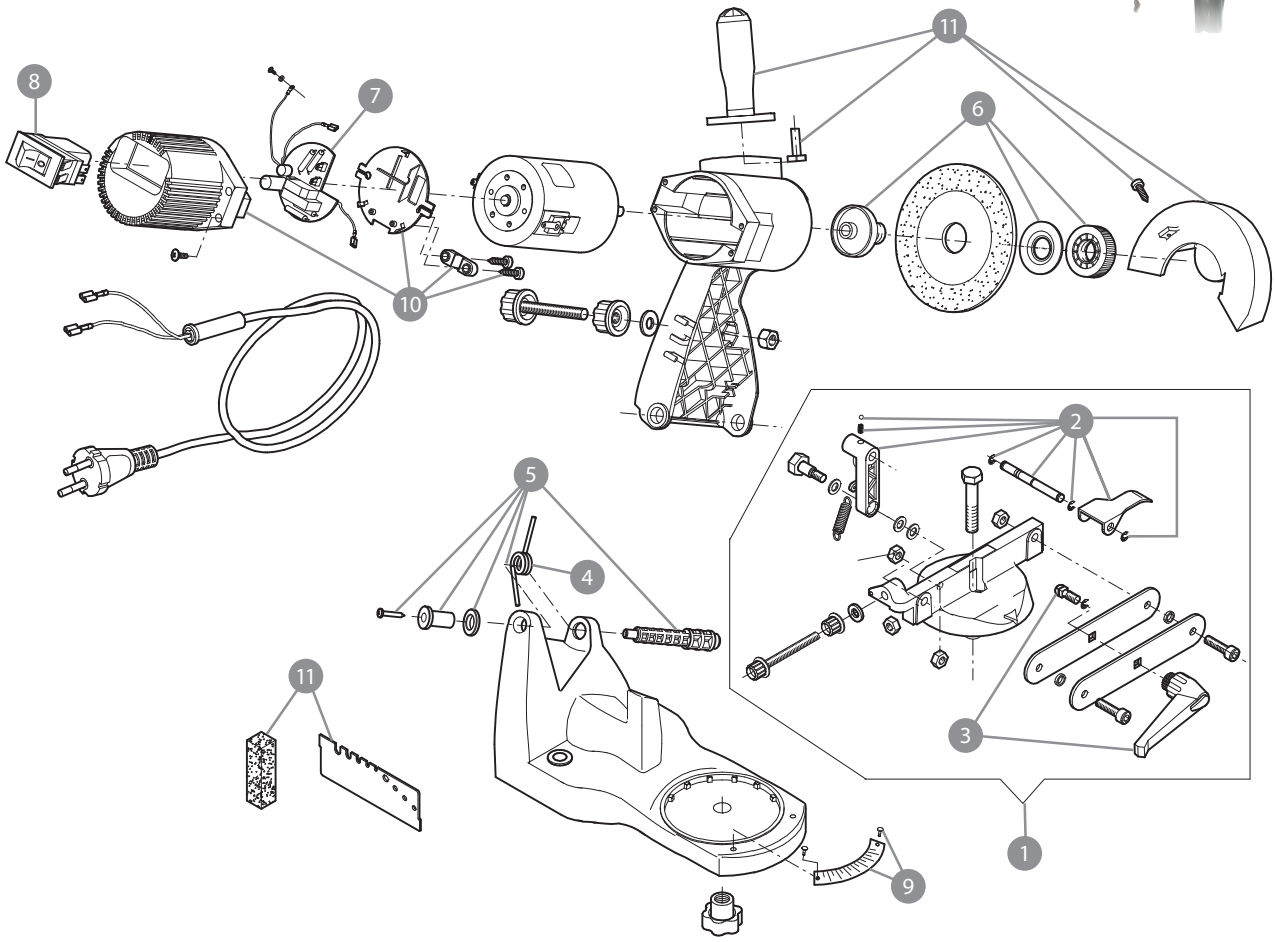


| OREGON | No. | Description | Product Code |
|---|---|---|---|
| 108476 | 1 | Complete Vise | |
| 110579 | 2 | Chain Stop Retrofit Kit | |
| 109171 | 3 | Vise Position / Tension Adjustment Knob | |
| 109175 | 4 | Return Spring, Grind Lever | |
| 537888 | 5 | Spring Arm Return Set | |
| 111941 | 6 | Aluminum Arbor Retrofit Kit | |
| 519971 | 7 | 120-Volt/230-Volt Electric Cardboard | |
| 519970 | 8 | 120-Volt Switch | |
| 108468 | 9 | Vise Screws & Plate Kit | |
| | 10 | Cover & Holding Plate Kit | |
| 554650 | 11 | Equipment Kit | |

## Bar-Mounted Mini Grinders (Obsolete)

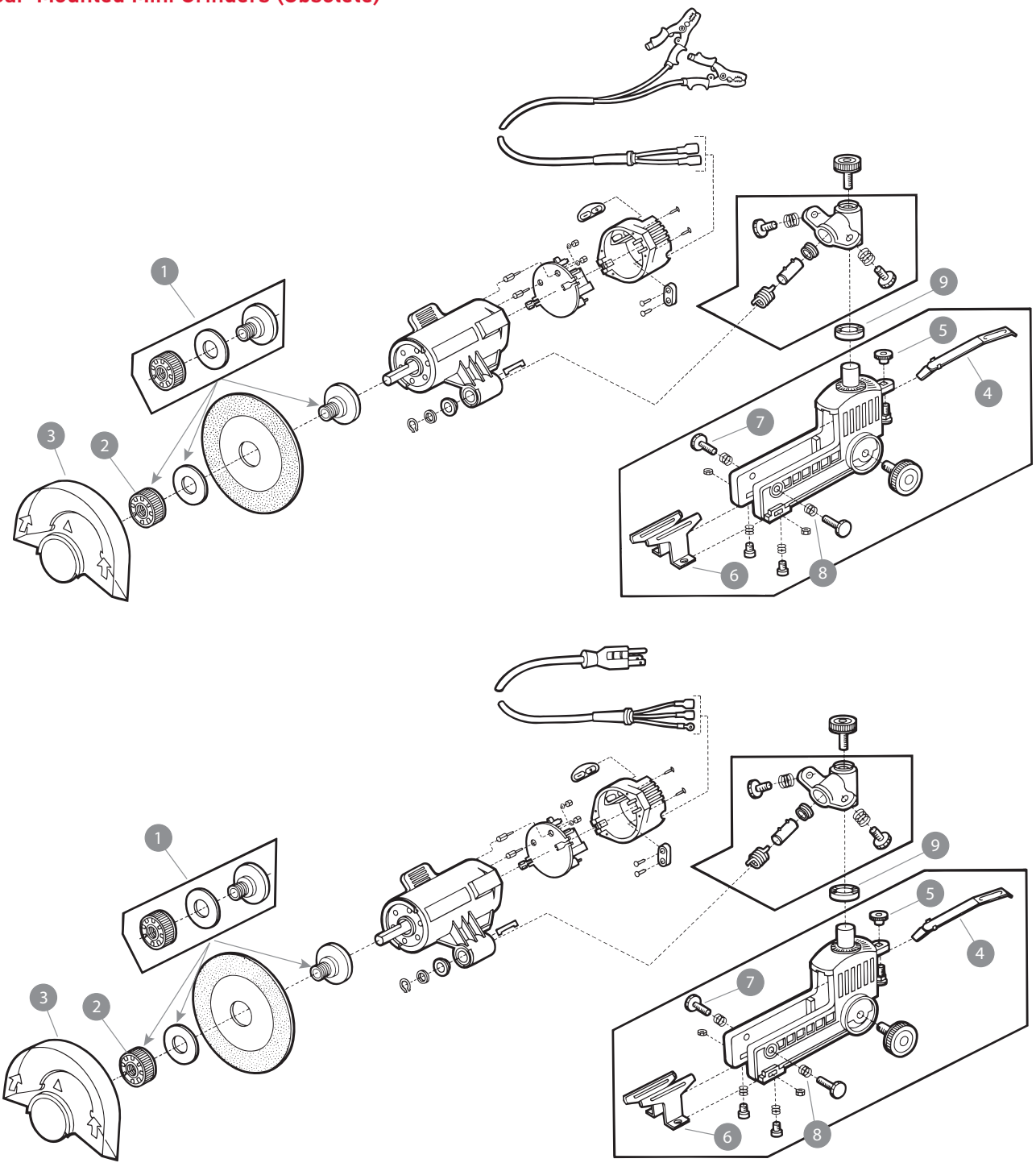


| OREGON | No. | Description | Product Code |
|---|---|---|---|
| 111941 | 1 | Aluminum Arbor Retrofit Kit | |
| 109170 | 3 | Plastic Guard / Shield | |
| 108206 | 4 | Stop Spring | |
| 108207 | 5 | Mount Adjustment Nut, Stop Spring | |

| OREGON | No. | Description | Product Code |
|---|---|---|---|
| 108208 | 6 | Jaw Plate | |
| 108209 | 7 | Adjustment Knob, Jaw Plate / Stop | |
| 108210 | 8 | Tension Spring, Jaw Plate / Stop | |

# Shop Tools – Lawn Mower Blade Grinders

## Model 760, Lawn Mower Blade Belt Grinder

Fastest blade sharpener on the market. Ceramic belts reduces heat generation. Includes chainsaw bar grinding attachment.

| OREGON | Description | Product Code |
|---|---|---|
| 88-100* | 1-1/2" X 60" Belt Grinder with Pedestal (88-115) | |
| 88-101* | 1-1/2" X 60" Belt Grinder | |
| | **Replacement Parts (pictured on next page)** | |
| 88-111 | 1-1/2" X 60" 40 Grit Ceramic Belt for 760 | |
| 88-112 | 1-1/2" X 60" 120 Grit Belt for 760 | |
| 88-113* | Dust Scoop for 760 | |
| 575377 | Motor, fits 88-100 & 88-101 Belt Grinders | |

- 1-1/2 HP dual capacitor induction motor
- 8000 SFPM — approximately 90 MPH
- 115V or 220V – 1 phase
- 90 duro serrated contact wheel
- Uses premium ceramic 1-1/2" x 60" coated abrasive belts
- Sharpens blades in seconds
- **Drop ship only direct to dealers (USA)**
- **Drop ship only direct to distributors (CAN)**

II

## Model x400, Lawn Mower Blade Belt Grinder

Sharpen blades in seconds. Easily sharpens flat blades, mulching blades, bush hog blades, as well as chipper blades.

| OREGON | Description | Product Code |
|---|---|---|
| 88-102* | 1-1/2" X 48" Belt Grinder w/Pedestal (88-115) | |
| 88-103* | 1-1/2" X 48" Belt Grinder | |
| | **Replacement Parts (pictured on next page)** | |
| 88-109 | 1-1/2" X 48" 40 Grit Ceramic Belt for X400 | |
| 88-110 | 1-1/2" X 48" 120 Grit Belt for X400 | |
| 575378 | Motor, fits 88-102 & 88-103 Belt Grinders | |

- 1 HP motor
- 8000 SFPM — approximately 90 MPH
- 115V or 220V – 1 phase
- 90 duro serrated contact wheel
- Uses premium ceramic 1-1/2" x 48" coated abrasive belts
- Sharpens blades in seconds
- **Drop ship only direct to dealers (USA)**
- **Drop ship only direct to distributors (CAN)**

NOTE: the x400 is designed for sharpening applications of 20 or less blades between grinder "resting" or motor cool-down periods. For sharpening applications of 20 or more blades, Oregon recommends upgrading to the 760.

* USA orders drop ship direct to dealers (in the lower 48 states only); Canadian orders drop ship direct to distributors only

## Blade Belt Grinder — Replacement Parts & Consumable Accessories

| OREGON | OEM No. | Description | Product Code |
|---|---|---|---|
| 88-104* | 702-S-90 | Serrated Contact Wheel | |
| 88-114* | 760T-2 | Tool Tray for 760 / X400 | |
| 88-115* | 01 | Pedestal for 760 / X400 | |
| 88-116* | | Chainsaw Bar Attachment for 760/X400 | |
| 88-118* | | Blade Table Assembly Kit Includes Table Assembly, Flail Blade Tube, & 90 Duro Serrated Contact Wheel | |
| 75-430 | 953 | V-Belt Motor to Contact Wheel for 760/ X400 | |

* USA orders drop ship direct to dealers (in the lower 48 states only);
Canadian orders drop ship direct to distributors only

88-104

88-113

88-116

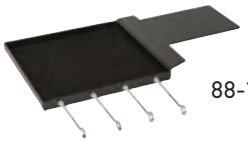
88-114

88-109, 88-110
88-111, & 88-112

88-115

## 88-021 Heavy-Duty Blade Grinder & Accessories

**88-021** **Heavy-Duty Blade Grinder**
A 1-1/2 HP, 1750 RPM motor will sharpen extended cut blades (up to 10" of sharpened edge) and a reversing switch allows for grinding in both directions.
Adjustable light included
Safety switch
Easy height adjustment
12" heavy-duty stone
More HP, more power
Includes Oregon® 88-022 grinding stone
Use with Oregon 88-022, 88-038, or 88-039 replacement grinding stone

Unit requires 29 Amps on startup

**88-022** **Grinding Stone, 12" Blue**
12" blue stone for heavy-duty blade grinder
Use with Oregon 88-021 blade grinder
OD: 12", thickness: 1", bore: 7/8"
Rating: 2200 max RPM
36 grit

Shorter life, faster grind

**88-038** **Grinding Stone, 12" Red**
12" hardened red stone for heavy-duty blade grinder
Use with Oregon 88-021 blade grinder
OD: 12", thickness: 1", bore: 7/8"
Rating: 2200 max RPM
46 grit

Longer life, slightly slower grind

**88-039** **Grinding Stone, 12" Red**
12" hardened red stone for heavy-duty blade grinder
Use with Oregon 88-021 blade grinder
OD: 12", thickness: 1", bore: 7/8"
Rating: 2200 max RPM
30 grit

Shorter life, faster grind

# Shop Tools – Lawn Mower Blade Grinders

| OREGON | Description | Product Code |
|---|---|---|

## Heavy-Duty Blade Grinders & Accessories

**88-035** **Mulching Blade Adaptor**
Fits Oregon® 88-021 blade grinder

**88-029** **Grit Collector**
Fits Oregon 88-021 blade grinder

**88-016** **Adapter Plate Kit**
Adapter plate kit for Oregon 88-021 blade grinder

**88-018** **Heavy-Duty Blade Grinder**
A 1 HP, 1750 RPM motor will sharpen extended cut blades (up to 9" of sharpened edge and a reversing switch allows grinding in both directions
Adjustable light included
Safety switch
Easy height adjustment
10" heavy-duty grinding stone
Includes Oregon 88-049 grinding stone

**88-049** **Grinding Stone, 10" Blue**
Use with Oregon 88-031 & 88-018 blade grinders
OD: 10", thickness: 1" bore: 3/4"
Replaces Oregon 88-041
Rating: 2200 max RPM
36 grit

**88-043** **Grinding Stone, 10" Red**
Use with Oregon 88-018 blade grinder
OD: 10", thickness: 1", bore: 3/4"
Rating: 2200 max RPM
46 grit

**88-015** **Universal Mulching Blade Adapter**
Use with Oregon 88-018 blade grinder

**88-037** **Grit Collector**
Use with Oregon 88-023 & 88-018 blade grinders

II

| OREGON | Description | Product Code |
|---|---|---|

## Blade Grinders & Accessories

**88-023** **Blade Grinder with Light**
A 1/2 HP standard-duty, 1750 RPM motor will sharpen up to 6" cutting edge and a reversing switch allows grinding in both directions
8" hardened red grinding stone
Easy-to-turn rotary adjusting handle
Easy-adjust knobs on height adjustment
Rubber feet reduce vibrations
Adjustable light included
Includes Oregon® 88-047 grinding stone
Use with Oregon 88-047 or 88-048 grinding stones
(replaces Oregon 88-020 blade grinder)

**88-025** **Blade Grinder**
A 1/3 HP, single direction, standard-duty, 1750 RPM non-reversing motor will sharpen any length cutting edge (right-hand cut blades only)
Safety switch
Easy height adjustment
No light
Uses 8" Oregon 88-047 or 88-048 grinding stones

**88-047** **Grinding Stone, 8" Red**
Use with Oregon 88-019, 88-023, & 88-025 blade grinders
OD: 8", thickness: 1", bore: 5/8"
Rating: 2200 max RPM
36 grit
Longer life, slightly slower grind

**88-048** **Grinding Stone, 8" Blue**
Use with Oregon 88-019, 88-023, & 88-025 blade grinders
OD: 8", thickness: 1", bore: 5/8"
Replaces Oregon 88-044
Rating: 2200 max RPM
30 grit
Shorter life, faster grind

**88-037** **Grit Collector**
Use with Oregon 88-023 & 88-018 blade grinders

**88-010** **Adjustment Wheel**
Use with Oregon 88-025 & 88-023 blade grinders
**Not used on current production models**

**88-028** **Mulching Blade Adapter**
Use with Oregon 88-023 blade grinder

# Shop Tools – Lawn Mower Blade Grinders

| OREGON | Description | Product Code |
|---|---|---|

## Blade Grinder Accessories

**88-017** **Adapter Plate Kit**
Use with Oregon® 88-023 blade grinder

**88-034** **Mulching Blade Adaptor**
Use with Oregon 88-019 & 88-025 blade grinders

**88-033** **Grit Collector**
Use with Oregon 88-019 & 88-025 blade grinders

**88-045** **Stone Dresser**
With diamond tip
Use with all Oregon blade grinders, including 88-019, 88-021, 88-023, & 88-018

**88-012** **Forward / Reverse Switch**
Use with all Oregon blade grinders, including 88-019, 88-021, 88-023, 88-025, & 88-018

**88-009** **Rubber Feet (requires 4)**
Use with Oregon blade grinder 88-023

**88-011** **On / Off Switch**
Use with older Oregon 88-021 & 88-023 blade grinders, & all Oregon 88-018, 88-019, & 88-025 blade grinders

**88-065** **On / Off Switch**
Fits Oregon 88-021 blade grinder

**88-066** **On / Off Switch**
Fits Oregon 88-023 blade grinder

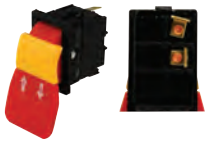

| OREGON | Description | Product Code |
|---|---|---|

## Blade Grinder Accessories

| | | |
|---|---|---|
| 55-001 | **Blade Sharpener**<br>Ideal for sharpening rotary lawn mower blades, roto tillers, sickle bar cutters, hoes, & scythes<br>Fits all 1/4" and 3/8" drills | |
| 514363 | **Clamshell Pack – 1 of 55-001** | |
| 42-095 | **Deck Leveler** | |

## Blade Balancers

| | | |
|---|---|---|
| 42-047 | **Blade Balancer**<br>Economical version of Oregon 42-016 (OBS) blade balancer | |
| 42-100 | **Blade Balancer**<br>A balanced blade reduces engine wear, stops vibration, and gives a smoother cut<br>Quality zinc die-cast | |
| 514364 | **Clamshell Pack – 1 of 42-100** | |

II

# Shop Tools

## Mower Ramps

**42-090** **Loading Ramps**
Folding, arched ramps ideal for loading riding mowers, lawn and garden equipment, & ATVs
Arched design prevents mower decks from hanging up on ramps
Compact – stores virtually anywhere
Galvanized steel for corrosion protection
Length: 7', width: 12"
Capacity: 1200 lb.
Assembly required

**42-091** **Loading Ramps**
Made from light-weight aluminum (half the weight of Oregon® 42-090), improved anchoring straps
Folding arch: 7-1/2"
Length: 90", width: 11-1/4", height: 6"
Weight: 33 lbs.
Distributed maximum loading capacity: 1500 lb. (750 lb. per ramp)
No assembly required

**42-095** **Deck Leveler**

**42-434-0** **Chain Holder**
For 35 through 60 chain
Works with bicycle chain
Complete with instructions
Holds chain in tensioned position to allow both hands to install links

## Shop Tools

**42-430-0** **Chain Detacher**
For 25 through 60 chain
Complete tool – hardened tip

**42-431-0** **Punch Only – (repair part for Oregon 42-430-0)**
For 25 through 60 chain
Hardened tip

**42-432-0** **Chain Detacher**
For 60 through 100 chain
Complete tool – hardened tip

**42-001** **Battery Hydrometer**
Heavy-duty shop version
Measures cell specific gravity

| OREGON | Description | Product Code |
|---|---|---|

## Shop Tools

**42-422** **Compression Tester**
Flexible hose with side pressure release valve
14 mm and 18 mm screw-in adaptors for spark plug holes
Reads up to 300 p.s.i.
Length: 12"

**42-505-0** **Feeler Gauge**
For sizes .0015" thru .035"
Contains 25, 1/2" gauges

**42-441** **Flywheel Puller**
Replaces Briggs & Stratton 19069/19165
For 3–3 1/2 HP engines
For 6, 7, & 8 HP engines

**42-073** **Flywheel Knocker**
For Tecumseh engines
5/8" thread

**42-446-0** **Gasket Scraper**
Nickel-chrome plated
Wide blade
“Insulite” plastic handle
Length: 11"

**42-411** **Hemostat**
6" Curved
Adjustable pressure locking teeth

**42-031** **Spark Tester**
Allows visual inspection of ignition output
Use between coil wire and spark plug

**42-087** **Spark Tester**
Use with engine running or just cranking
Similar to Briggs & Stratton part number 19368

# Shop Tools

| OREGON | Description | Product Code |
|---|---|---|

## Shop Tools

| | | |
|---|---|---|
| 42-217 | **Piston Ring Compressor**<br>Depth: 2"<br>Capacity: 1-3/4" to 3-1/2"<br>Adaptable to all types of rings<br>Allen wrench included | |
| 42-452 | **Spark Plug Wrench**<br>Length: 4"<br>Fits: 3/4" & 13/16" plug nuts<br>Rust proof<br>Electro-plated<br>Briggs & Stratton 19374 | |
| 42-455 | **Throttle Wire Z-bender**<br>For use with .054" & .072" throttle control innerwire<br>Easy-grip handle<br>Instructions included | |
| 42-480-0 | **T-handle Allen Wrench Set**<br>5-Piece set – metric<br>Sizes 2.5 mm, 3 mm, 4 mm, 5 mm, & 6 mm<br>6" arm with t-handle<br>Ideal for import saws & trimmers | 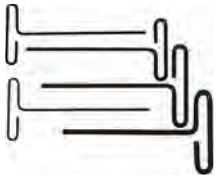 |
| 42-424 | **Valve Spring Compressor**<br>Ideal for removing and replacing valve springs on small engines.<br>Long & slender, ideally adapted to reach into small recesses<br>Adjustable steel spring jaws with cadmium finish | |
| 42-427-0 | **Valve Lifter**<br>For Briggs & Stratton, Clinton, Onan, Wisconsin, Kohler, & Tecumseh | |
| 42-311 | **Valve Grinder**<br>For seating valves to seats<br>Vacuum cup attached directly to handle | |
| 42-333 | **Suction Cup**<br>Fits Oregon 42-301 & 42-311<br>Cup diameter: 3/4" | |
| 42-301 | **Valve Grinder**<br>Short self-locking stem<br>Special valve grinding bit<br>Small grinding spring<br>Oregon 42-333 vacuum cup | |

II

OREGON | Description | Product Code

## Shop Tools

**42-423** **Wireless Tachometer**

Built-in selector switch to choose 0-5000 RPM low scale or 0-15,000 RPM high scale
RPM readout accurate to within + or - 2%
Solid state electronics
Zener voltage regulator uses 9-volt battery (not included)
Built-in battery check
For all 2-cycle & 4-cycle single cylinder engines

**42-450-0** **Roll Pin Punch Set**

| Pt. size | Pin Length | Overall Length |
|---|---|---|
| 1/8" | 2" | 4" |
| 5/32" | 2-1/2" | 4-1/2" |
| 3/16" | 2-1/2" | 4-1/2" |
| 7/32" | 3" | 5" |
| 1/4" | 3-1/2" | 5-1/2" |
| 5/16" | 4" | 6" |

**42-516** **Valve Refacer**

Clamp designed so that main strain is directed into the machine v-block
May be held in vise or screwed to bench
Black enamel finish

**88-400** **Oil Extractor**

Ideal for oil changes on boats, cars, motorcycles, and lawn power equipment
Hand operated vacuum pump mounts on 6 liter container
Extracts fluids from inaccessible or confined areas
Approximately 10 strokes needed to empty most lawn mower engine sumps
Comes with a removable pouring spout for easy disposal
Works great for trapped water

**88-405** **Oil & Fuel Extractor**

Fuel and oil removal and transfer system. Remove oil and other fluids into the 48 oz. plastic container using the provided pump and hoses
Also use for fuel transfer between equipment using universal adapter provided
Insert the adapter and pump into fuel opening of machine needing fuel and the transfer hose into the tank with fuel
Pump the handle to start transfer
Quick & simple operation

**42-961** **Oil Drain Pan**

10 quart capacity
Resistant to chemicals and solvents
Convenient pouring spouts for disposal
Low profile easily slides under lawn & garden tractors

II

# Shop Tools

| OREGON | Description | Product Code |
|---|---|---|

## Shop Tools

**OILDRI** **Premium Oil-Dri Absorbant**
Use Premium Oil-Dri Absorbant on oils, coolants, greases, water, & other spills
Thermal process increases absorbents' power & minimizes dust
40 pound bag

## Tire Tools

**67-110** **Valve Stem Fishing Tool**
Aligns & holds valve in position with valve hole while mounting tire
Fits all size holes

**67-111** **4-way Valve Stem Repair Tool**
Valve core screwdriver
Rethread valves
Valve core easy out
Deflates tubes

**67-112** **Bead Lube Swab**
Ideal for applying lubricant to tire, beads & rims
10-1/2" length

**67-113** **Sliptac Tire Bead Lubricant**
Prevents rim slippage, prevents rust, a liquid bead lubricant for easier mounting of lawn & garden, car, & truck tires
One gallon bottle, dries fast, leaves no residue
Non-combustible, non toxic

OREGON | Description | Product Code

## Tire Tools

**70-700** **Safety Seal Tubeless Tire Repair Kit**
Kit contains:
Insertion tool
Heavy-duty spreader probe
Lube
Spare needle
Two razor blades
30 repair strips
Kit comes in convenient plastic case
Detailed instructions included

**67-109-0** **Tubeless Safety Repair Kit for ATVs**
Emergency repair kit for ATV and other tires
Tires can be safely & easily repaired without removal from equipment
Complete with two (2) C02 cylinders, adaptor valve, &
hose to inflate tires with compressed air
Detailed instructions included
Packaged in convenient tube that can be attached to handle bars

**70-721** **Tubeless Safety Repair Kit**
Emergency repair kit for ATV and other tires
Tires can be safely & easily repaired without removal from equipment
Does not include C02 cylinders and adaptor
Detailed instructions included

**70-703** **Repair Refill**
60 per pack
Priced per pack

Oregon® manual tire changers are designed for time and labor savings. Any wheel can be secured onto the non-skid base plate by simply positioning and tightening the "quick adjust" center post onto the threaded rod. This unique design allows the operator to change small tires and switch wheel sizes or styles very quickly.

**67-214** **Tire Changer – Complete**
Designed especially for 4" to 12"
Lug-center or bearing-in hub wheels
(Includes Oregon 67-215, 67-216, & 67-217)

**67-215** **Replacement Threaded 12" Rod**
For Oregon 67-214 tire changer.

**67-216** **Quick Adjust Center Post**
For Oregon 67-214 tire changer.

**67-217** **"Duck Head" Mount/De-Mount Tool**
For Oregon 67-214 tire changer.

67-214

# Shop Tools

| OREGON | Description | Product Code |
|---|---|---|

## Tire Tools

**67-221** **Oregon® Bead Seater Tire Inflator**
Oregon version of part number 67-201-1.
Has improved “fire hose” type release valve
Convenience of attached air hose for use as air bubble

## Replacement Parts

| OREGON | № | Description | Product Code |
|---|---|---|---|
| 67-225 | 1 | Air Hose | |
| 67-224 | 3 | Safety Release Valve | |
| 67-226 | 4 | Valve Assembly | |

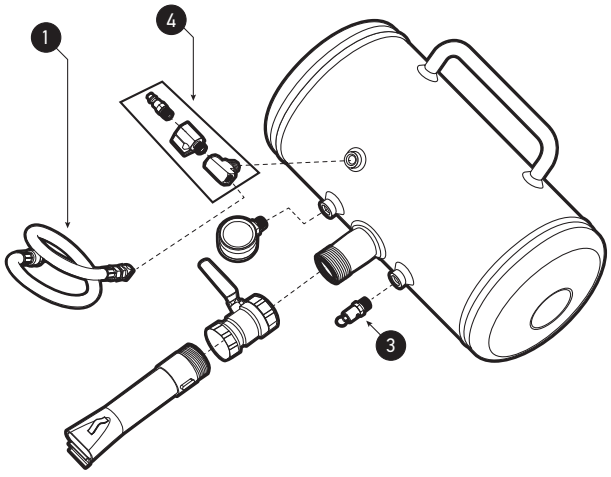


Can’t find what you’re looking for?
Try us online to search the latest products available.

OregonProducts.com

# FIELD SUPPLIES


Equipment Racks and Accessories . . . SFS 74–76

Mower Sulkies . . . . . SFS 77–78

VP Fuels and Treatments . . . . . SFS 79–81

2 and 4-Cycle Oils . . . . . SFS 82–83

Bar and Chain and Hydraulic Oils . . . . SFS 84

Fuel Stabilizer . . . . . SFS 85

VP Power Wash . . . . . SFS 85

Fuel and Oil Cans, Storage, and Containment . . . . . SFS 86–91

Lubricants, Grease, Cleaners, Solvents, Sealants, and Glues . . . . . SFS 91–99

Hardware Assortments, Nuts, Bolts, and Washers . . . . . SFS 100–106

# Commercial Equipment Racks & Accessories

OREGON | Description | Product Code

## Equipment Racks

**42-032** **Backpack Blower Rack/Holder**
BR3000 Backpack Blower Rack/Holder securely holds and locks most commercial backpack blowers using a flat pin design
- Heavy-duty black vinyl coating
- Comes with hardware, one lock
- Will internal wall mount or external trailer mount

**42-196** **Retaining Strap Long**
For padlocks

**42-043** **Hand Tool Rack**
HT2500 Hand Tool Rack
- Mounts on Oregon® 42-063 Trimmer Guard
- Holds up to 5 rakes, shovels, brooms, or other hand tools
- Durable powder-coated finish

III

**42-044** **Multi-Purpose Holder**
MP2000 Multi-Purpose Holder powder-coated holder will hold most chainsaws and hand-held blowers
Includes bungee cord
13"L x 12"W x 9-1/2"H

**42-063** **Vinyl-Coated Trimmer Racks**
Securely hold 3 trimmers and/or brushcutters
- Steel racks with heavy-duty black vinyl coating
- For mounting on open trailers
- Includes three keyed-alike padlocks

**42-204** **Padlocks**
Set of 3
Keyed-alike

**42-196** **Retaining Strap Long**
For padlocks

OREGON | Description | Product Code

## Equipment Racks

**42-064** **Vinyl Coated Equipment Racks**
Steel racks with heavy-duty black vinyl coating
- Rack has three adjustable 2" wide slot
- Accommodates a variety of equipment
- For mounting on open trailers
- Includes three keyed-alike padlocks

**42-204** **Padlocks**
Set of 3
Keyed-alike

**42-196** **Retaining Strap – Long**
For padlocks & flat retainer

**42-189** **Flat Retainer**

**42-199** **Nyloc Nut**

III

Can't find what you're looking for?
Try us online to search the latest products available.

OregonProducts.com

# Commercial Equipment Racks & Accessories

| OREGON | Description | Product Code |
|---|---|---|

## Pro Locker Wheel Locks

| | | |
|---|---|---|
| 42-207 | **Pin**<br>Non-Locking Assembly<br>Use with Oregon® 42-045 & 42-048 | |
| 42-208 | **Pin**<br>Locking Assembly<br>Use with Oregon 42-045 & 42-048 | |

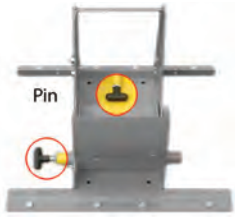


## EZ Gate

| | | |
|---|---|---|
| 42-041 | **EZ Gate**<br>Works on gates up to 200 lbs. (use 2 kits for heavier gates)<br>• Recipient of the OEMmie Award<br>• Installs in about an hour<br>• Stainless housing<br>• Aluminum hardware & no-rattle spring insert<br>• Mounts easily to most trailer gates<br>• Trailer & gate NOT included | |

III

OREGON Description Product Code

## Mower Sulkies

### 42-050 Mower Sulky

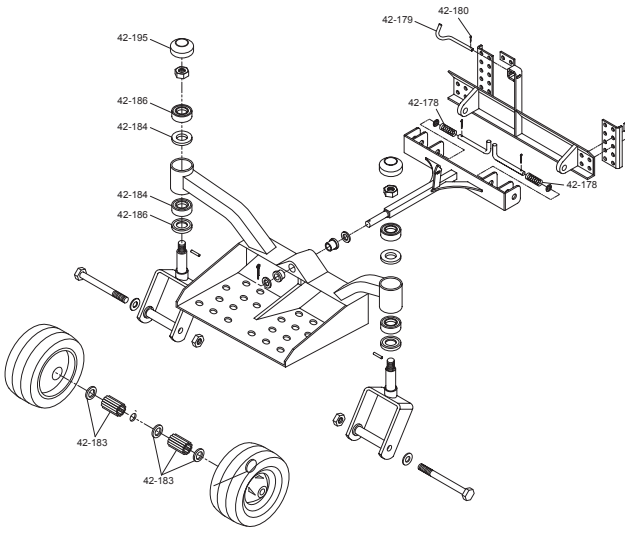

- Mower Sulky with 2 swivel wheels
- True zero-turn performance
- Keeps operator centered behind the mower
- Backs up easily & safely
- Tapered roller bearings for smooth operation
- Large platform for extra foot space
- Easily attaches in minutes to most commercial mowers
- A hydro necessity

III

### 42-066 Mower Sulky

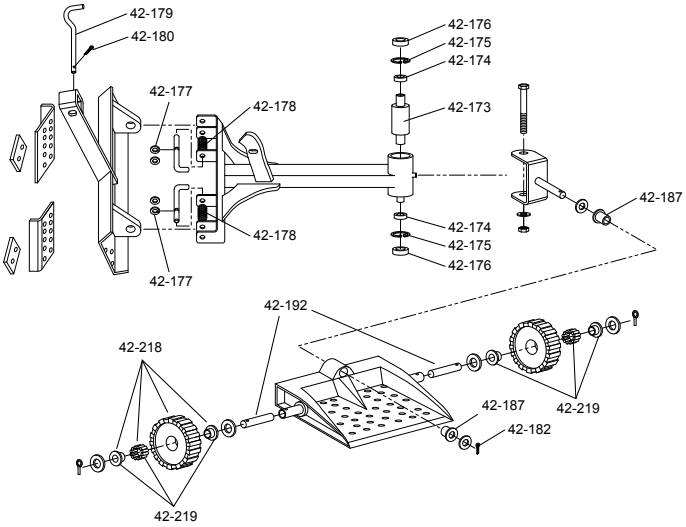

- Mower Sulky with 2 wheels with pneumatic tires
- Easily attaches in minutes to most commercial mowers
- Heavy-duty steel construction with durable powder-coat finish
- Protected grease fittings & quick release pins
- Large platform for extra foot space
- Increases productivity

# Commercial Equipment Racks & Accessories

OREGON Description Product Code

## Mower Sulkies

**42-206** **Sulky**

- Mower Sulky with 2 wheels with pneumatic tires
- Easily attaches in minutes to most commercial mowers
- Heavy-duty steel construction with durable powder-coat finish
- Protected grease fittings & quick release pins
- Large platform for extra foot space
- Increases productivity

**42-079** **Mower Sulky**

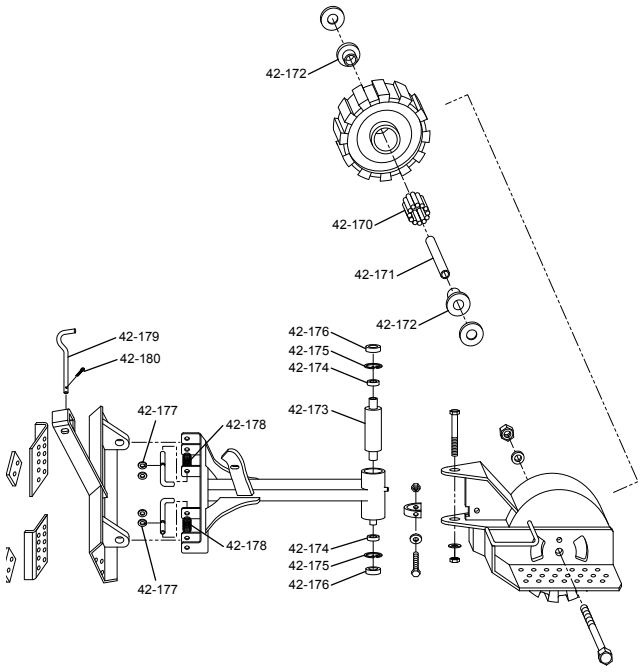

- Mower Sulky with 1 large pneumatic tire
- Easily attaches in minutes to most commercial mowers
- Heavy-duty steel construction with durable powder-coat finish
- Protected grease fittings & quick release pins
- Large platform for extra foot space
- Increases productivity

## Mower Sulky Parts List

| OREGON | Description | Product Code |
|---|---|---|
| 42-172 | Bearing Cap | |
| 42-173 | Axle Bushing | |
| 42-174 | Bearing | |
| 42-175 | Clip (10-Pack) | |
| 42-176 | Pivot End Caps | |
| 42-178 | Spring (10-Pack) | |

| OREGON | Description | Product Code |
|---|---|---|
| 42-183 | Wheel Bearing Kit | |
| 42-187 | Bronze Pivot Bushing | |
| 42-188 | Wheel Bearing w/ Cap | |
| 42-192 | Bushing Sleeve | |
| 42-218 | Wheel Assembly | |
| 42-195 | Caster Cap | |

OREGON | Description | Product Code

## Ethanol-Free Fuel – VP 4-Cycle

- Prevent ethanol-related problems
- Provide easier, more dependable starts
- Remain stable in storage through the off-season & beyond
- Avoid costly repairs & rebuilds
- Reduces downtime caused by fuel system problems
- Gets very economical when purchased in larger container sizes

| | | |
|---|---|---|
| VP6205 | **VP 4-Cycle Fuel – 1 Quart**<br>94 Octane, ethanol-free, premium unleaded fuel in 1 quart can<br>**Drop shipped only** | |
| VP6208 | **Case of Eight (8) Quart Cans**<br>**Drop shipped only** | |
| VP6201 | **VP 4-Cycle Fuel – 1 Gallon**<br>94 Octane, ethanol-free, premium unleaded fuel in 1 gallon can<br>**Drop shipped only** | |
| VP6206 | **Case of Six (6) Gallon Cans**<br>**Drop shipped only** | |
| VP6202 | **VP 4-Cycle Fuel – 5 Gallon**<br>94 Octane, ethanol-free, premium unleaded fuel in 5 gallon pail<br>**Drop shipped only** | |
| VP6204 | **VP 4-Cycle Fuel – 54 Gallon**<br>94 Octane, ethanol-free, premium unleaded fuel in 54 gallon drum<br>**Drop shipped only** | |

III

## Ethanol-Free Fuel – VP Pre-mix 50:1

| | | |
|---|---|---|
| VP6235 | **VP Pre-Mix, 50:1 Fuel – 1 Quart**<br>94 octane, ethanol-free fuel + 100% synthetic oil (50:1) in 1 quart can<br>**Drop shipped only** | |
| VP6238 | **Case of Eight (8) Quart Cans**<br>**Drop shipped only** | |
| VP6231 | **VP Pre-Mix, 50:1 Fuel – 1 Gallon**<br>94 octane, ethanol-free fuel + 100% synthetic oil (50:1) in 1 gallon can<br>**Drop shipped only** | |
| VP6236 | **Case of Six (6) Gallon Cans**<br>**Drop shipped only** | |
| VP6232 | **VP Pre-Mix, 50:1 Fuel – 5 Gallon**<br>94 octane, ethanol-free fuel + 100% synthetic oil (50:1) in 5 gallon pail<br>**Drop shipped only** | |
| VP6234 | **VP Pre-Mix, 50:1 Fuel – 54 Gallon**<br>94 octane, ethanol-free fuel + 100% synthetic oil (50:1) in 54 gallon drum<br>**Drop shipped only** | |

# Fuel & Oil Supplies, Storage, & Containment

| OREGON | Description | Product Code |
|---|---|---|

## Ethanol-Free Fuel – VP Pre-Mix 40:1

| | | |
|---|---|---|
| VP6295 | **VP Pre-Mix, 40:1 Fuel – 1 Quart**<br>94 octane, ethanol-free fuel + 100% synthetic oil (40:1) in 1 quart can<br>**Drop shipped only** | |
| VP6298 | **Case of Eight (8) Quart Cans**<br>**Drop shipped only** | |
| VP6291 | **VP Pre-Mix, 40:1 Fuel – 1 Gallon**<br>94 octane, ethanol-free fuel + 100% synthetic oil (40:1) in 1 gallon can<br>**Drop shipped only** | |
| VP6296 | **Case of Six (6) Gallon Cans**<br>**Drop shipped only** | |
| VP6292 | **VP Pre-Mix, 40:1 Fuel – 5 Gallon**<br>94 octane, ethanol-free fuel + 100% synthetic oil (40:1) in 5 gallon pail<br>**Drop shipped only** | |
| VP6294 | **VP Pre-Mix, 40:1 Fuel – 54 Gallon**<br>94 octane, ethanol-free fuel + 100% synthetic oil (40:1)<br>**Drop shipped only** | |

## Ethanol-Free Fuel – VP Multi-Mix 40:1/50:1

| | | |
|---|---|---|
| VP6815 | **VP Multi-Mix 40:1/50:1 – 1 Quart**<br>94 octane, ethanol-free fuel + 100% synthetic oil (40:1/50:1)<br>**Drop shipped only** | |
| VP6818 | **Case of Eight (8) 1 Quart Cans**<br>**Drop shipped only** | |
| VP68111 | **VP Multi-Mix 40:1/50:1 – 1 Gallon**<br>94 octane, ethanol-free fuel + 100% synthetic oil (40:1/50:1)<br>**Drop shipped only** | |
| VP6812 | **VP Multi-Mix 40:1/50:1- 5 Gallon**<br>94 octane, ethanol-free fuel + 100% synthetic oil (40:1/50:1)<br>**Drop shipped only** | |
| VP6814 | **Multi-Mix 40:1/50:1 – 54 Gallon**<br>94 octane, ethanol-free fuel + 100% synthetic oil (40:1/50:1)<br>**Drop shipped only** | |

III

OREGON | Description | Product Code

## Ethanol-Free Fuel – VP Pro Max

**VP6835** **VP Pro-Max Fuel – 1 Quart**
97 octane, ethanol-free fuel
**Drop shipped only**

**VP6838** **Case of Eight (8) Quart Cans**
**Drop shipped only**

**VP6832** **VP Pro-Max Fuel – 5 Gallon**
97 octane, ethanol-free fuel
**Drop shipped only**

**VP6834** **VP Pro–Max Fuel – 54 Gallon**
97 octane, ethanol-free fuel, 50:1 Premix
**Drop shipped only**

## Motor Treatments

**VP6635** **VP Fix-It Fuel – 1 Quart**
Fuel system treatment for 2 & 4-cycle small engine applications
89 octane gas + oil blend "Mechanic in a Bottle™"
**Drop shipped only**

**VP6638** **Case of Eight (8) Quart Cans**
**Drop shipped only**

**VP6632** **VP Fix-It Fuel – 5 Gallon**
Fuel system treatment for 2 & 4-cycle small engine applications
89 octane gas + oil blend "Mechanic in a Bottle"
**Drop shipped only**

**SF16** **Sea Foam Motor Treatment – 16 Ounces**
100% pure petroleum product that safely and effectively cleans internal fuel and oil system components, helping your gasoline or diesel engine run cleaner and more efficiently

- Sea Foam is an EPA-registered product
- Will not harm engine components, seals, gaskets, catalytic converters, or oxygen sensors
- Helps liquefy gum & varnish deposits when added to fuels or oils
- As a fuel system additive; cleans fuel injectors, clean carbon, gum, & varnish deposits
- Adds lubricity to fuel
- Stabilizes fuel for 2 years & controls moisture
- As an oil system additive; controls moisture, gum, varnish, & residue deposits

## VP Fuel Accessories

**VP3051** **Pump, Siphon**
For VP 54 gallon drums
**Drop shipped only**

**VP348** **Spout, Power**
For VP 5 gallon cans
Internal vent tube ensures a smooth & quick pour
**Drop shipped only**

III

# Fuel & Oil Supplies, Storage, & Containment

| OREGON | Description | Product Code |
|---|---|---|

## 2-Cycle Engine Oil

**54-001**

**2-Cycle Oil, 50:1 Mix**
1 gallon mix
Eight (8) 6-packs per case
Manufactured by Champion Brands LLC
Replaces Champion 4115L
2.56 oz.

**54-002**

**2-Cycle Oil, 50:1 Mix**
2-1/2 gallon mix
Eight (8) 6-packs per case
Manufactured by Champion Brands LLC
Replaces Champion 4115J
6.4 oz.

**54-005**

**2-Cycle Oil, 50:1 Mix**
5 gallon mix
12 per case
Manufactured by Champion Brands LLC
Replaces Champion 4115K
12.8 oz.

**54-006**

**2-Cycle Oil: 50:1 Mix**
50 gallon mix
Manufactured by Champion Brands LLC
Replaces Champion 4683N
1 gallon jug

**54-007**

**2-Cycle Oil, 50:1 Mix**
250 gallon mix
Manufactured by Champion Brands LLC
Replaces Champion 4683D
5 gallon jug

**40092**

**Oregon® Only One™, 2-Cycle Engine Oil**
1 gallon mix, previously Oregon 54-088-0

- Environmentally friendly, easy to use
- Contains fuel stabilizer
- Reduces particulate emissions & oil consumption by at least 50% over standard oil
- Good for all 2-cycle engines.
- Works with ethanol blended fuels
- Complies fully with California's Proposition 65 guidelines
- Contains 48, 1.8 oz. pillow packs per display case

III

OREGON | Description | Product Code

## Synthetic 2-Cycle Engine Oil

**VP2901** — **2-Cycle Oil, Synthetic – 2.6 oz.**
Fully synthetic 2-cycle oil
**Drop shipped only**

**VP2903** — **2-Cycle Oil, Synthetic – 5.2 oz.**
Fully synthetic 2-cycle oil
**Drop shipped only**

**VP2905** — **2-Cycle Oil, Synthetic – 12.8 oz.**
Fully synthetic 2-cycle oil
**Drop shipped only**

## 4-Cycle Small Engine Oils

**VP2911** — **4-Cycle Small Engine Oil – 18 oz.**
Premium SAE 30, 4-cycle oil
**Drop shipped only**

**VP2913** — **4-Cycle Small Engine Oil – 32 oz.**
Premium SAE 30, 4-cycle oil
**Drop shipped only**

**VP2921** — **4-Cycle Synthetic Small Engine Oil – 32 oz.**
Full synthetic SAE 30, 4-cycle oil, 10W–30
**Drop shipped only**

## Air Tool Oil

**4067V** — **Champion Air Tool Oil**
Designed to lubricate pneumatic (air) driven tools of all types.

- Promotes longer tool life
- Contains rust & oxidation inhibiting additives
- Protects during cold & hot temperatures
- 12 per case
- 4 oz. bottle

III

# Fuel & Oil Supplies, Storage, & Containment

| OREGON | Description | Product Code |
|---|---|---|

## Bar & Chain Oil

Specially compounded to provide extra high tackiness and prevent "throw off" even under adverse weather conditions. Provides maximum engine power, low friction, and faster cutting time. High film-strength prevents wear or scuffing of chain links and bars while protecting metal parts against corrosion and rust. Resist build-up of deposits such as pitch, sap, or gum.

**54-026** **Bar & Chain Lube**
1 quart bottle

**54-059** **Bar & Chain Lube**
1 gallon bottle

**VP2931** **VP Bar & Chain Oil – 32 oz.**
**Drop shipped only**

**VP2933** **VP Bar & Chain Oil – 1 Gallon**
**Drop shipped only**

## Hydraulic Oil

**54-063** **SP Antiwear Hydraulic Oil**
Recommended for use in hydraulic systems – especially those designed with close tolerances operating where extremes of pressure, temperature, and pump speed are encountered.
Performance Properties:

- Anti-wear protection for a wide range of hydraulic pumps & components
- Use under severe operating conditions
- Meets the ASTM salt, corrosion, water, rust, & copper strip corrosion tests
- Excellent water separation qualities
- Filterability meets Denison requirements
- Foam control
- Good low temperature properties
- To ensure proper lubrication in all cases consult the operator's manual
- 2-1/2 gallon bottle

**VP2941** **VP Hydraulic Oil – 2.5 Gallons**
Multi-purpose AW46
**Drop shipped only**

III

| OREGON | Description | Product Code |
|---|---|---|

## Fuel Stabilizer

| | | |
|---|---|---|
| 4205M | **Fuel Stabilizer**<br>Stabilizes fuel and keeps it fresh, previously Oregon® 42-912-1<br>Keeps gum and varnish from developing<br>Use in any 4-cycle, 2-cycle, gas, or diesel engine fuel systems<br>Promotes easy starts after storage<br>Convenient easy measure, easy pour bottle<br>8oz. bottle, 12 per carton | |
| VP2815 | **VP Fuel Stabilizer w/Ethanol Shield – 8 oz.**<br>For all 2 & 4-cycle engines, treats 80 gallons, reduces heat, extends engine life, protect & prevent repairs<br>**Drop shipped only** | |
| VP2805 | **VP Fuel System Cleaner – 16 oz.**<br>Treats up to 20 gallons, cleans entire fuel system, restores engine performance, eliminates knocking & pinging, increases fuel mileage<br>**Drop shipped only** | |
| VP2825 | **VP Power Boost – 16 oz.**<br>Treats up to 18 gallons, increases horsepower, cleans fuel system, improves combustion, provides "seat-of-the-pants" power boost<br>**Drop shipped only** | |
| VP2835 | **VP Diesel All-In-One – 24 oz.**<br>Treats 240 gallons, cleans injectors & pumps, replaces lost lubrication, cleans sludge deposits, biodiesel protection, synthetic fuel catalyst, increase mileage, reduces smoking, increase cetane, disperses water, anti gel<br>**Drop shipped only** | |
| VP2855 | **VP Octanium™ – 32 oz.**<br>Octane concentrate, eliminates knocking & pinging, lead substitute, cleans fuel injectors, improves throttle response & acceleration, eliminates gum & varnish build-up, & increases horsepower<br>**Drop shipped only** | |
| VP2865 | **VP Cetanium Diesel Treatment – 32 oz.**<br>Cetane concentrate, cleans injectors & pumps, cleans sludge & deposits, biodiesel protection, increases mileage, reduces smoking, & replaces lost lubrication<br>**Drop shipped only** | |

## VP Power Wash

| | | |
|---|---|---|
| VPM10011 | **VP PowerWash Super Concentrate Formula**<br>Packaged in gallons that can be used alone for extremely dirty, muddy, and/or large applications such as off-road vehicles or dirt track cars, as well as to refill Moto Formula spray bottles when diluted with water. **Drop shipped only** | |
| VPM10018 | **Case of 4 of VPM10011, Drop Shipped Only** | |
| VPM10025 | **VP PowerWash Moto Formula**<br>Designed for power sports applications such as dirt bikes, ATV's, and UTV's as well as bicycles, including road, mountain and BMX. Great for zero turn and riding lawn mowers.<br>**Drop shipped only** | |
| VPM10027 | **Case of 12 of VPM10025, Drop Shipped Only** | |

III

| OREGON | Description | Product Code |
|---|---|---|

## Type I Safety Cans – 2 Quart, Galvanized Steel

**UI-4-FS** **Metal Safety Can, Red – 2 Quart**
Includes the F-15 funnel
**Drop shipped only**

## Type I Safety Cans – 1 Gallon, Galvanized Steel

**UI-10-FS** **Metal Safety Can, Red – 1 Gallon**
Includes the F-15 funnel
**Drop shipped only**

**UI-10-FSY** **Metal Safety Can, Yellow – 1 Gallon**
Includes the F-15 funnel
**Drop shipped only**

**UI-10-FSB** **Metal Safety Can, Blue – 1 Gallon**
Includes the F-15 funnel
**Drop shipped only**

## Type I Safety Cans – 2 Gallon, Galvanized Steel

**UI-20-FS** **Metal Safety Can, Red – 2 Gallon**
Includes the F-15 funnel
**Drop shipped only**

**UI-20-FSY** **Metal Safety Can, Yellow – 2 Gallon**
Includes the F-15 funnel
**Drop shipped only**

**UI-20-FSB** **Metal Safety Can, Blue – 2 Gallon**
Includes the F-15 funnel
**Drop shipped only**

**UI-20-FSG** **Metal Safety Can, Green – 2 Gallon**
Includes the F-15 funnel
**Drop shipped only**

| OREGON | Description | Product Code |
|---|---|---|

## Type I Safety Cans – 2.5 Gallon Galvanized Steel

| | | |
|---|---|---|
| UI-25-FS | **Metal Safety Can, Red – 2.5 Gallon**<br>Includes the F-15 funnel<br>**Drop shipped only** | |
| UI-25-FSY | **Metal Safety Can, Yellow – 2.5 Gallon**<br>Includes the F-15 funnel<br>**Drop shipped only** | |
| UI-25-FSB | **Metal Safety Can, Blue – 2.5 Gallon**<br>Includes the F-15 funnel<br>**Drop shipped only** | |
| UI-25-FSG | **Metal Safety Can, Green – 2.5 Gallon**<br>Includes the F-15 funnel<br>**Drop shipped only** | |

## Type I Safety Cans – 5 Gallon, Galvanized Steel

| | | |
|---|---|---|
| UI-50-FS | **Metal Safety Can, Red – 5 Gallon**<br>Includes the F-15 funnel<br>**Drop shipped only** | |
| UI-50-FSY | **Metal Safety Can, Yellow – 5 Gallon**<br>Includes the F-15 funnel<br>**Drop shipped only** | |
| UI-50-FSB | **Metal Safety Can, Blue – 5 Gallon**<br>Includes the F-15 funnel<br>**Drop shipped only** | |
| UI-50-FSG | **Metal Safety Can, Green – 5 Gallon**<br>Includes the F-15 funnel<br>**Drop shipped only** | |
| F-15 | **9" Polyethylene Funnel**<br>For metal type I cans<br>**Drop shipped only** | |

III

| OREGON | Description | Product Code |
|---|---|---|

## Type II Safety Cans – Galvanized Steel

**U2-11-S** — **Metal Safety Can, Red – 1 Gallon**
OD: 7/8" with flex spout
**Drop shipped only**

**U2-26-S** — **Metal Safety Can, Red – 2.5 Gallon**
OD: 7/8" with flex spout
**Drop shipped only**

**U2-51-S** — **Metal Safety Can, Red – 5 Gallon**
OD: 7/8" with flex spout
**Drop shipped only**

## D.O.T. Approved Type II Safety Fuel Cans – 5 Gallon, Galvanized Steel

**1215R** — **D.O.T. Type II Safety Can, 5 Gallon – Red**
OD: 7/8" with flex spout
**Drop shipped only**

**1215Y** — **D.O.T. Type II Safety Can, 5 Gallon – Yellow**
OD: 7/8" with flex spout
**Drop shipped only**

**FD-25** — **12" Flex Spout**
OD: 7/8"
**Drop shipped only**

## Oily Waste Safety Cans – Polyethylene

**933-FL** — **Oily Waste Safety Can, Red – 6 Gallon**
Polyethylene with foot lever
**Drop shipped only**

**935-FL** — **Oily Waste Safety Can, Red – 10 Gallon**
Polyethylene with foot lever
**Drop shipped only**

**937-FL** — **Oily Waste Safety Can, Red – 14 Gallon**
Polyethylene with foot lever
**Drop shipped only**

III

| OREGON | Description | Product Code |
|---|---|---|

## Spill Platforms & Pallets

**1632E**
**Modular Platform Unit – 2 Drum**
Same as Eagle 1632
**Drop shipped only**

**1633E**
**Modular Platform Unit – 1 Drum**
Same as Eagle 1633
**Drop shipped only**

**1620E**
**Containment Pallet – 2 Drum**
Same as Eagle 1620
**Drop shipped only**

**1635E**
**Containment Pallet – 4 Drum**
Same as Eagle 1635
Low profile
**Drop shipped only**

**1647E**
**Containment Platform – 4 Drum**
Same as Eagle 1647
In-line
**Drop shipped only**

**1689E**
**Poly Ramp**
Same as Eagle 1689
For platform units and 1645 (yellow)
**Drop shipped only**

## Storage Cabinets — For Flammable Liquids

**1932E**
**Storage Cabinet – 30 Gallon**
Two manual doors
One shelf
Same as Eagle 1932
**Drop shipped only**

**3010E**
**Storage Cabinet – 30 Gallon**
Two self-closing doors
One shelf
Same as Eagle 3010
**Drop shipped only**

**1947E**
**Storage Cabinet – 45 Gallon**
Two manual doors
Two shelves
Same as Eagle 1947
**Drop shipped only**

III

# Fuel & Oil Supplies, Storage, & Containment

| OREGON | Description | Product Code |
|---|---|---|

## Storage Cabinets – For Flammable Liquids

**4510E**

**Storage Cabinet – 45 Gallon**
Two self-closing doors
Two shelves
Same as Eagle 4510
**Drop shipped only**

**PI-47**

**Safety Storage Cabinet – 60 Gallon**
For paint and ink
Red cabinet color
**Drop shipped only**

**1926E**

**Safety Storage Drum Cabinet**
55 Gallon
Yellow cabinet color
Same as Eagle 1926
**Drop shipped only**

**1910G**

**Self Closing Kit**
For Eagle cabinet doors

## Fuel Cans – Canada Only

**104432**

**Gas Can, Red**
1.25 Gal. / 4.5 L with sight line
**Available only in Canada**

**104433**

**Gas Can, Red**
2.5 Gal. / 10 L with sight line
**Available only in Canada**

**104434**

**Gas Can, Red**
5 Gal. / 20 L
**Available only in Canada**

OREGON | Description | Product Code

## Fuel Cans – Canada Only

**92189** **Combi Can**
6 L & 2.5 L
**Available only in Canada**

**106301** **Diesel Can, Yellow**
5 Gal. / 20 L
**Available only in Canada**

## Parts for Canadian Gas Cans & Combi-Can

**521016** **Replacement Kit**
Black cap, stopper, and vent cap
**Available only in Canada**

**92199** **Replacement Kit**
Black cap, vent cap, and flexible spout
**Available only in Canada**

**104435** **Safety Spout with Stop Flow**
**Available only in Canada**

## Hand Cleaner

Permatex fast orange smooth hand cleaner in cream and lotion formulas. Fast orange is the #1 selling, biodegradable, waterless, petroleum solvent-free hand cleaner. It contains no harsh chemicals, mineral oils, or ammonia that can sting cuts and abrasions. Pure, fresh-smelling natural citrus power does the cleaning while aloe, lanolin, glycerin, and jojoba condition and protect skin. Fast orange gently deep cleans the toughest soils. Work great on laundry strains, scuff marks, tile floors, pet odors, and many other household cleaning needs.

**F25219** **Fast Orange Hand Cleaner**
- With pumice
- 1 gallon

III

# Lubricants, Cleaners, Solvents, Sealants, & Glues

| OREGON | Description | Product Code |
|---|---|---|

## Grease, High Temperature

**4050T** — **High Temperature Grease**

- Stays put under extreme shock loads
- Very low friction coefficient
- Moisture resistant
- Meets NLGI GC-LB requirements
- Sold in cartons of 10 only
- Priced per each
- Previously 54-020-0
- 14 oz.

## Grease Gun

**54-021** — **Lube 'n Push Pro Grease Gun**

- Features an all-purpose nozzle
- Manufactured from high quality plastic materials
- Oil and grease resistant
- Withstands changes in temperature
- One hand operation
- 1.5 oz. capacity

## Gear Lubricant

**4120H** — **Gear Lubricant**

- Multipurpose gear oil
- 1 quart squeeze bottle
- 80-90 WT, gear lube
- Previously 4113H

**49-010** — **Gear Lubricant**

- "00" grease
- 9 oz. bottle
- 12 per case

**49-015** — **Gear Lubricant**

- "0" grease
- 4-1/2 oz. tube
- 12 tubes per case

| OREGON | Description | Product Code |
|---|---|---|

## Heavy-Duty Penetrant-Lubricant

**4244M** — **Heavy-Duty Penetrating Lubricant**

Loosens and lubricates even the most rusted bolts.

- Displaces water
- Stops squeaks
- Protects metal surfaces against rust & corrosion
- Removes tar
- Previously 54-015-0
- 9 oz. aerosol can

**16PB** — **PB Blaster Penetrating Lubricant**

Breaks free rusted joints and frozen parts by removing surface tension.

- Powerful, concentrated penetrating catalyst
- Non-evaporating lubricant
- VOC compliant
- 11 oz. aerosol can

## WD-40 Lubricant

WD-40 Smart Straw — now you can use WD-40 to protect, clean, and lubricate thousands of items — without ever losing the straw again.

- Features a permanently attached straw that sprays two ways
- Flip it up for precision stream
- Flip it down for regular spray action

**F110054** — **WD–40 Lubricant**

Smart Straw 8 oz. aerosol can

**F110078** — **WD–40 Lubricant**

Smart Straw 11 oz. aerosol can

## Carburetor Spray Cleaner

**4521K** — **Carburetor Spray Cleaner**

Especially formulated to dissolve grease, varnish, and sludge from carburetors

- 11 oz. aerosol can
- Previously 54-012-0 & 4121K
- Heavy-duty

## Starting Fluid

**PSTFLL** — **Starting Fluid**

Premium starting fluid contains 50% ether for a fast start on the coldest days (regular starting fluid contains 25% ether)

- 11 oz. aerosol can

III

# Lubricants, Cleaners, Solvents, Sealants, & Glues

| OREGON | Description | Product Code |
|---|---|---|

## Starting Fluid

**PSTFLS**

**Starting Fluid**
Premium starting fluid contains 50% ether for a fast start on the coldest days (regular starting fluid contains 25% ether)
- 7 oz. aerosol can

## Solvents

**4117D**

**Champion Solvent**
General-purpose standard solvent (sometimes referred to as mineral spirits or petroleum naptha)
- Close tolerance to specifications
- Good solvency
- Narrow range of volatility
- 5 gallon bucket

## Tire Inflator

**4086KH**

**Tire Inflator with Hose**
Quickly inflates and seals tires with small to medium punctures
- Previously 54-010-0
- 12 oz. aerosol can

## Brake Cleaner

**4126P**

**Brake Cleaner**
For disc and ABS brakes
- Removes brake fluid, dirt, & grease
- Removes harmful brake dust
- Improves braking & reduces noise
- Non-flammable
- Can be used to clean electrical components
- Does not contain silicones
- Leaves no residue
- Previously 54-017-0
- 19 oz. aerosol can
- NOT FOR SALE IN CALIFORNIA

**4525I**

**Non-Chlorinated Brake Cleaner**
Cleans brake, clutch parts, and CV joints
- Removes brake fluid, grease, & oil
- Degreases instantly
- Leaves no residue
- Previously 4125I
- 15 oz. aerosol can

OREGON | Description | Product Code

## Battery Terminal Care

**42-005** **Battery Terminal Protector Spray**
Fights battery corrosion.
- Prolongs battery life
- 10 oz. can

**42-007** **Battery Cleaner Spray**
Penetrates, loosens, and neutralizes all acid corrosion deposits.
- Assures maximum current flow
- 16 oz. can

## Permatex Sealant & Threadlocker

**F80022** **Permatex Blue RTV Silicone GSK**
The original Permatex Blue
- Will not foul oxygen sensors
- Replaces almost any cut gasket
- Makes reliable "formed-in-place" gaskets that resist cracking, shrinking, & migrating
- Coats pre-cut gaskets to increase reliability
- Temperature range -65° F to 500° F (-54° C to 260° C) intermittent
- Resists auto & shop fluids
- First generation 1970-1980 gasket maker
- 3 oz.

**F82180** **Permatex Ultra Black Silicone**
Fast-curing formula
- Sensor safe, low odor, & noncorrosive
- Meets performance specs of OE silicone gaskets
- Retains high flexibility, oil resistance properties through use of patented adhesion system
- Temperature range -65º F to 500º F (-54° C to 260° C) intermittent
- Resists auto & shop fluids and vibration
- 3 oz.

**F29208** **Permatex Right Stuff® Cartridge**
Return equipment to service immediately when you make leak-proof gaskets in just one minute with the Right Stuff
- Latest elastomeric rubber gasket technology is blowout resistant
- Outperforms pre-cut gaskets
- Temperature range -75° F to 450° F (-59° C to 232° C) continuous, 500° F (260° C) intermittent
- Resists ATF, coolant, oil, & other shop fluids
- Protects against leaks caused by vibration & thermal expansion
- Sensor-safe
- 5 oz.

**F81158** **Permatex Black RTV Silicone**
General-purpose, black RTV indoor / outdoor sealant
- Seals, bonds, repairs, mends, & secures glass, metal, plastics, fabric, vinyl, weather stripping, & vinyl tops
- Protects & repairs electrical wiring
- May be applied to horizontal or vertical surfaces
- Waterproof & flexible
- Temperature range -75° F to 450° F (-59° C to 232° C)
- Resists oil, water, weather, vibration, & grease
- 3 oz.

III

| OREGON | Description | Product Code |
|---|---|---|

## Permatex Sealant & Threadlocker

**F80050** **Permatex Clear RTV Silicone**

General-purpose, clear RTV indoor / outdoor sealant

- Seals, bonds, repairs, mends & secures glass, metal, plastics, fabric, vinyl, weather stripping, & vinyl tops
- Protects & repairs electrical wiring
- May be applied to horizontal or vertical surfaces
- Waterproof & flexible
- Temperature range -75° F to 400° F (-59° C to 204° C)
- Resists oil, water, weather, vibration, & grease
- 3 oz.

**F81160** **Permatex Hi-Temp Red RTV Silicone**

Formulated for hi-temp applications, or heavy-duty use (such as towing, etc.)

- OEM specified
- Replaces almost any cut gasket by making reliable “formed-in-place” gaskets that resist cracking, shrinking, and migrating caused by thermal cycling
- Coats pre-cut gaskets to increase reliability
- Temperature range -65º F to 650º F (-54° C to 343° C) intermittent
- Resists auto and shop fluids
- First generation 1970-1980 gasket maker
- 3 oz.

**24010E** **Permatex Threadlocker Gel Blue**

The patent-pending GEL TWIST pin-point applicator puts the Threadlocker where you want it: on the part

- Gel formula provides “liquid-reliability” without drips, globs, mess or waste
- All-purpose, medium strength threadlocker
- Ideal for all nut & bolt applications 1/4 inch to 1 inch (6 mm to 25 mm)
- Eliminates need for stocking expensive lock nuts & lock washers
- Locks & seals while preventing parts from loosening due to vibration
- Protects threads from corrosion
- Removable with hand tools for easy disassembly
- .35 oz. / 10 g

**F27100** **Permatex Threadlocker Red – 271**

High-strength threadlocker for heavy-duty applications 3/8 inch to 1 inch (10 mm to 25 mm)

- OEM specified
- Especially well-suited for permanently locking studs and press fits
- Adds 3,000 PSI holding power on slip and press fit assemblies
- Replaces set screws and snap rings
- Locks against vibration loosening
- May require heat or special tools for removal
- .20 oz. / 6 ml

**F24200** **Permatex Threadlocker Blue – 242**

All-purpose, medium strength threadlocker. Ideal for all nut and bolt applications 1/4" to 3/4" (6 mm to 20 mm)

- OEM specified
- Eliminates need for stocking expensive lock nuts & lock washers
- Locks and seals while preventing parts loosening due to vibration
- Protects threads from corrosion
- Removable with hand tools for easy disassembly
- .20 oz. / 6 ml

III

OREGON | Description | Product Code

## Gorilla Glue

Gorilla Glue bonds materials other adhesives simply can't—metal, stone, wood, ceramics, foam, glass and much more

- Versatile – ideal for most household fixes & building repairs
- 100% waterproof – does not break down when exposed to outdoor elements
- Easily passes ANSI/HPVA HP-1-2000 Types 1 & 2
- Temperature resistant – once it's dry Gorilla Glue is unaffected by extreme heat or cold
- Sandable, paintable, stainable – invisible glue line makes finishing easy
-

**F50002** **Gorilla Glue**
- 2 oz. bottle

**F50004** **Gorilla Glue**
- 4 oz. bottle

## J-B Weld

**F8265** **J-B WELD**

The world's finest cold-weld compound. It's a remarkably easy, convenient, and inexpensive alternative to welding, soldering, and brazing. One contains liquid steel / epoxy resin, and the other contains hardener. When mixed together in equal portions, a chemical reaction occurs that turns the mixture into a compound as hard and tough as steel — and with similar properties

- Bonds any combination of iron, steel, copper, aluminum, brass, bronze, pewter, porcelain, ceramic, marble, glass, PVC, ABS, concrete, fiberglass, wood, fabric, paper — just about any porous & non-porous material
- It stays pliable for about 30 minutes after mixing, sets in 4 - 6 hours, and cures fully in 15 - 24 hours
- Tensile strength: 3960 PSI
- Withstands temperatures up to 500°
- J-B Weld is packaged in two tubes

**F8276** **J-B KWIK**

The same as the original J-B Weld except it stays pliable for about 2 minutes after mixing, sets in just 4 minutes, and cures fully in 4 hours. Because J-B KWIK cures so fast, it's not as strong or as heat-resistant as the original J-B WELD

- Tensile strength: 2100 PSi
- Withstands temperatures up to 300°
- J-B KWIK is packaged in two tubes

## Snow & Ice Melter

This blend of sodium chloride and magnesium chloride is an efficient and affordable ice melt product. Aspen contains patented inhibitors designed to reduce impact to metal and spreading equipment. Melts ice to -7°F/-21°C

**F51020** **Aspen Snow and Ice Melter**
- 20 pound poly bag

**F51050** **Aspen Snow and Ice Melter**
- 50 pound poly bag

III

| OREGON | Description | Product Code |
|---|---|---|

## Pressure Washer Pump Saver

**AR64511** **Pump Saver**
- Non-aerosol version
- 16 oz. bottle

## Slime Tire Sealant

Slime Tire Sealant is formulated and tested for use in all pneumatic tires. Once installed, Slime remains liquid and will not harden or dry out. As the Slime treated tire rotates, centrifugal force pushes the sealant to the tread area creating a layer of protection, repairing punctures as they occur, or treating existing punctures. Slime is not intended for use in tires losing pressure from sidewall punctures, bead leaks, damaged rims, or faulty valves. Slime is recommended as a repair only in high-speed, over-the-road tires.

- Remains liquid inside the tire, coating the tread area as the tire rotates
- Non-toxic, non-hazardous, non-flammable, non-aerosol, and water soluble
- Contains rust and corrosion inhibitors to maintain the integrity of the rim
- TPMS friendly (Note: May not install easily into tires with direct or valve mounted devices)
- Tires treated with Slime can be cleaned out with water allowing for the installation of a proper plug/patch
- Slime for tubeless tires can also be installed into tubeless bike tires
- Installs between the rim and the tire bead

Hold the bead open with two tire levers, install, and re-inflate with a fast burst of air to seat the bead to the rim. Repairs punctures up to (6 mm) using Fibro-Seal technology. What is Fibro-Seal technology? Slime utilizes a state-of-the-art blend of environmentally friendly fibers, binders, polymers and proprietary congealing agents which intertwine and clot within the puncture. This Fibro-Seal lattice, together with the viscous transportation system (the "green goo"), seeks out and tightly packs itself into the puncture, preventing and repairing flats with a flexible long-lasting plug.

**SB1G** **Slime Tire Sealant**
- 1 gallon jug with pump

**SL07** **Slime Tire Sealant**
- 8 oz. bottle

**SL09** **Slime Tire Sealant**
- 32 oz. bottle

**SL11** **Slime Tire Sealant**
- 16 oz. bottle

# Hardware Assortments, Nuts, Bolts, & Washers

## Cotter Pins

| OREGON | Qty. | Description | Product Code |
|---|---|---|---|
| 08-410 | 280 | Cotter Pins<br>Standard Refill Qty. 10 | |
| | | Components | |
| | 30 | 1/16" x 1" | |
| | 20 | 1/16" x 2" | |
| | 20 | 1/16" x 2" | |
| | 30 | 3/32" x 1" | |
| 02-209 | 20 | 3/32" x 1-1/2" | |
| | 20 | 3/32" x 2" | |
| 02-216 | 30 | 1/8" x 1" | |
| 02-217 | 20 | 1/8" x 1-1/2" | |
| 02-220 | 20 | 1/8" x 2" | |
| | 20 | 5/32" x 1-1/2" | |
| | 10 | 5/32" x 2" | |
| | 10 | 5/32" x 2-1/2" | |
| | 10 | 3/16" x 1-1/2" | |
| | 10 | 3/16" x 2" | |
| | 5 | 5/16" x 2" | |
| | 5 | 5/16" x 2-1/2" | |

## Electrical Terminals & Connectors

| OREGON | Qty. | Description | Product Code |
|---|---|---|---|
| 08-152 | 170 | Electrical Terminals & Connectors<br>Standard Refill Qty. 10 | |
| | | Components | |
| | 10 | Scotch Tab Connector – Blue | |
| | 10 | Eye Terminal #6 Screw – Blue | |
| | 10 | Eye Terminal #10 Screw – Blue | |
| 33-307 | 10 | Eye Terminal 1/4" Screw – Blue | |
| | 20 | Spade Terminal #10 Screw – Blue | |
| | 10 | Electrical Terminal – Hook Style | |
| 33-312 | 20 | 2-Wire Butt Connector – Red | |
| 33-313 | 20 | 2-Wire Butt Connector – Blue | |
| 33-301 | 10 | Slide Connector – Female – Blue | |
| 33-302 | 10 | Slide Connector – Male – Blue | |
| | 20 | 2-Wire Butt Connector – Yellow | |
| | 10 | Spade Terminal #6 Screw – Red | |
| | 10 | Hook Terminal #6 Screw – Blue | |

## E-Clips

| OREGON | Qty. | Description | Product Code |
|---|---|---|---|
| 08-300 | 240 | E-Clips<br>Standard Refill Qty. 10 | |
| | | Components | |
| | 30 | 1/8" | |
| | 50 | 1/4" | |
| 02-007 | 50 | 3/8" | |
| 02-002 | 40 | 1/2" | |
| 02-008 | 20 | 5/8" | |
| 02-006 | 30 | 3/4" | |
| 02-009 | 20 | 7/8" | |

## Hair Pins

| OREGON | Qty. | Description | Product Code |
|---|---|---|---|
| 08-150 | 150 | Hair Pins<br>Standard Refill Qty. 10 | |
| | | Components | |
| 02-411 | 10 | .148" x 2-15/16" | |
| 02-414 | 40 | .080" x 1-3/16" | |
| 02-417 | 20 | .125" x 1-3/4" | |
| 02-419 | 30 | .062" x 1-9/16" | |
| 02-424 | 30 | .062" x 1-5/16" | |
| 02-432 | 20 | .094" x 1-5/16" | |

III

## Grease Fittings

| OREGON | Qty. | Description | Product Code |
|---|---|---|---|
| 08-016 | 110 | Grease Fittings<br>Standard Refill Qty. 10 | |
| | | Components | |
| 02-010-1 | 30 | Straight – 1/4"-28 | |
| 02-011-1 | 10 | 45° 1/4"-28 | |
| | 20 | 90° 1/4"-28 | |
| | 10 | 90° 1/8" Pipe | |
| | 20 | 45° 1/8" Pipe | |
| 02-015-1 | 20 | Straight 1/8" Pipe | |

## Metric Hex Cap Screws & Nuts

| OREGON | Qty. | Description | Product Code |
|---|---|---|---|
| 08-240 | 225 | Metric Hex Cap Screws & Nuts<br>No Refills Available | |
| | | Components | |
| | 10 | M4 x 12M Bolt | |
| | 10 | M4 x 20M Bolt | |
| | 10 | M4 x 16M Bolt | |
| | 10 | M4 x 25M Bolt | |
| | 10 | M4 x 20M Bolt | |
| | 10 | M4 x 30M Bolt | |
| | 5 | M8 x 25M Bolt | |
| | 5 | M8 x 40M Bolt | |
| | 5 | M10 x 16M Bolt | |
| | 5 | M10 x 40M Bolt | |
| | 20 | M5 Lock Washer | |
| | 20 | M6 Lock Washer | |
| | 20 | M8 Lock Washer | |
| | 10 | M10 Lock Washer | |
| | 20 | M4 Nut | |
| | 20 | M5 Nut | |
| | 20 | M6 Nut | |
| | 10 | M8 Nut | |
| | 5 | M10 Nut | |

## Socket Set Screws

| OREGON | Qty. | Description | Product Code |
|---|---|---|---|
| 08-200 | 200 | Socket Set Screws<br>Standard Refill Qty. 10 | |
| | | Components | |
| | 10 | 1/8" x 3/16" Coarse | |
| | 10 | 5/32" x 3/16" Coarse | |
| | 10 | 3/16" x 1/4" Coarse | |
| | 30 | 1/4" x 1/4" Coarse | |
| | 20 | 1/4" x 3/8" Coarse | |
| 02-509 | 30 | 5/16" x 3/8" Coarse | |
| | 20 | 5/16" x 1/2" Coarse | |
| | 10 | 3/8" x 3/8" Coarse | |
| | 10 | 3/8" x 1/2" Coarse | |
| | 20 | 1/4" x 1/4" Fine | |

## Throttle Accessories

| OREGON | Qty. | Description | Product Code |
|---|---|---|---|
| | 130 | Throttle Accessories<br>Refills only | |
| | | Components | |
| | 20 | Cable Clip | |
| | 10 | Cable Clip | |
| 02-115 | 10 | Cable Clip | |
| 02-099 | 20 | Wire Swivel | |
| 02-098 | 20 | Wire Swivel | |
| 02-108 | 10 | Conduit Clip | |
| 02-111 | 10 | Conduit Clip | |
| | 10 | Conduit Clip | |
| 02-106 | 10 | Conduit Clip | |
| 02-107 | 10 | Conduit Clip | |

III

# Hardware Assortments, Nuts, Bolts, & Washers

## Spring Pins / Roll Pins

| OREGON | Qty. | Description | Product Code |
|---|---|---|---|
| 08-375 | 285 | Spring Pin / Roll Pin<br>Standard Refill Qty. 10 | |
| | | Components | |
| | 10 | 1/16" x 3/16" | |
| | 10 | 1/16" x 5/16" | |
| | 10 | 1/16" x 3/4" | |
| | 10 | 5/64" x 1/4" | |
| | 10 | 5/64" x 1/2" | |
| | 10 | 5/64" x 1" | |
| | 10 | 3/32" x 5/8" | |
| | 10 | 3/32" x 1" | |
| | 10 | 3/32" x 1-1/4" | |
| | 10 | 1/8" x 5/8" | |
| | 10 | 1/8" x 1" | |
| | 10 | 1/8" x 1-1/4" | |
| | 10 | 5/32" x 5/8" | |
| | 10 | 5/32" x 1" | |
| | 10 | 5/32" x 1-1/2" | |
| | 10 | 3/16" x 5/8" | |
| | 10 | 3/16" x 1" | |
| | 10 | 3/16" x 1-1/2" | |
| | 10 | 7/32" x 5/8" | |
| | 10 | 7/32" x 1-1/4" | |
| | 10 | 7/32" x 1-3/4" | |
| | 10 | 1/4" x 5/8" | |
| | 10 | 1/4" x 1-1/4" | |
| | 10 | 1/4" x 1-3/4" | |
| | 10 | 5/16" x 3/4" | |
| | 10 | 5/16" x 1-1/2" | |
| | 10 | 5/16" x 2" | |
| | 5 | 3/8" x 3/4" | |
| | 5 | 3/8" x 1-1/2" | |
| | 5 | 3/8" x 2" | |

## Tiller Tine Pins

| OREGON | Qty. | Description | Product Code |
|---|---|---|---|
| 08-710 | 71 | Tiller Tine Pins<br>Standard Refill Qty. 10 | |
| | | Components | |
| 02-327 | 5 | 5/16" x 2" Tine Pin | |
| 02-325 | 18 | 3/8" x 2" Tine Pin | |
| | 5 | 7/16" x 2-1/2" Tine Pin | |
| | 3 | 1/2" x 2" Tine Pin | |
| 02-432 | 32 | 1-5/8" Hair Pin | |
| 02-414 | 5 | 1-3/16" Hair Pin | |
| 02-417 | 3 | 1-3/4" Hair Pin | |

## O-Rings

| OREGON | Qty. | Description | Product Code |
|---|---|---|---|
| 08-225 | 170 | O-Rings<br>Standard Refill Qty. 10<br>Gas and Oil Resistant<br>Buytl/Nitrile Rubber | |
| | | Components | |
| 02-635 | 20 | 1/8" ID x 1/4" OD | |
| | 10 | 7/32" ID x 11/32" OD | |
| | 10 | 3/8" ID x 1/2" OD | |
| | 10 | 1/2" ID x 11/16" OD | |
| | 10 | 11/16" ID x 7/8" OD | |
| 02-648 | 20 | 5/32" ID x 9/32" OD | |
| | 10 | 1/4" ID x 3/8" OD | |
| | 10 | 3/8" ID x 9/16" OD | |
| | 10 | 9/16" ID x 3/4" OD | |
| 02-644-0 | 10 | 3/4" ID x 15/16" OD | |
| | 10 | 3/32" ID x 15/64" OD | |
| 02-640 | 20 | 3/16" ID x 5/16" OD | |
| | 10 | 5/8" ID x 13/16" OD | |
| | 10 | 5/8" ID x 3/4" OD | |

III

## Snap Rings

| OREGON | Qty. | Description | Product Code |
|---|---|---|---|
| 08-331 | 300 | Snap Rings<br>Standard Refill Qty. 10 | |
| | | Components | |
| | 5 | 1-1/4" | |
| | 10 | 1" | |
| | 20 | 7/8" | |
| | 10 | 13/16" | |
| 02-486 | 35 | 3/4" | |
| 02-490 | 30 | 5/8" | |
| | 20 | 9/16" | |
| | 20 | 1/2" | |
| | 50 | 7/16" | |
| | 50 | 3/8" | |

## Shoulder Bolts

| OREGON | Qty. | Description | | Product Code |
|---|---|---|---|---|
| 04-170 | 190 | Shoulder Bolts<br>Standard Refill Qty. 10<br>All Bolts are 3/8-16 Thread with 3/4" Thread Length | | |
| | | Shoulder Length | Bolt Length | |
| 04-151 | 10 | 1-17/32" | 1-31/32" | |
| 04-154 | 10 | 1-5/16" | 2-1/16" | |
| 04-153 | 10 | 1-3/8" | 2-1/8" | |
| 04-157 | 10 | 1-7/16" | 2-3/16" | |
| 04-150 | 10 | 1-1/2" | 2-1/4" | |
| 04-159 | 10 | 1-9/16" | 2-5/16" | |
| 04-155 | 10 | 1-5/8" | 2-3/8" | |
| 04-152 | 10 | 1-3/4" | 2-1/2" | |
| 04-158 | 10 | 1-7/8" | 2-5/8" | |
| 04-160 | 10 | 2" | 2-3/4" | |
| | | Keps Nuts | | |
| 04-556 | 90 | 3/8-16" | | |

## In-Tank Fuel Filters

| OREGON | Qty. | Description | Product Code |
|---|---|---|---|
| 08-075-0 | 74 | In-Tank Fuel Filters<br>Standard Refill Qty. 10 | |
| | | Components | |
| 07-200 | 10 | 1/8" Inlet, Plastic Case | |
| 07-201 | 10 | Felt Only – Fits 07-206 | |
| 07-204 | 5 | Felt Style – For McCulloch | |
| 07-205 | 5 | Foam Style – For Stihl | |
| 07-206 | 12 | 1/8" Inlet, Felt Style – Small | |
| 07-207 | 10 | 1/8" Inlet, Felt Style – Large | |
| 07-215 | 7 | 3/16" Inlet, Porous Plastic | |

## Gasket/Intake - 2-Cycle Engines

| OREGON | Qty. | Description | Product Code |
|---|---|---|---|
| 08-010 | 114 | Gasket/Intake, 2-Cycle Engines<br>Standard Refill Qty. 10 | |
| | | Components | |
| | 10 | Intake Gasket for HU* | |
| | 5 | Intake Gasket for HK* | |
| | 5 | Intake Gasket for HK* | |
| | 10 | Intake Gasket for HCA, HDA* | |
| | 5 | Intake Gasket for HL* | |
| | 5 | Intake Gasket for HS* | |
| | 10 | Intake Gasket for WS** | |
| | 5 | Intake Gasket for MDC** | |
| | 2 | Intake Gasket for WZ** | |
| | 2 | Intake Gasket for WZ** | |
| | 5 | Intake Gasket for HL* | |
| | 10 | Intake Gasket* | |
| | 10 | Intake Gasket* | |
| 49-262 | 10 | Intake Gasket | |
| | 10 | Intake Gasket | |
| | 5 | Gasket Material | |
| | 5 | Intake Gasket* | |

*Tillotson **Walbro See the "Gasket" section for more information

III

# Hardware Assortments, Nuts, Bolts, & Washers

## Torsion & Extension Springs

| OREGON | Qty. | Description | Product Code |
|---|---|---|---|
| 08-201 | 112 | Torsion & Extension Springs | |
| | | Components | |
| | 10 | 1/4" x 7/16" x .020" | |
| | 10 | 1/4" x 7/8" x .018" | |
| | 10 | 7/32" x 1-1/2" x .018" | |
| | 12 | 11/32" x 1-7/8" x .031" | |
| | 12 | 5/16" x 1-3/4" x .030" | |
| | 12 | 9/32" x 2-3/16" x .022" | |
| | 8 | 23/64" x 1-3/8" x .031" | |
| | 8 | 13/64" x 1-3/4" x .021" | |
| | 10 | 9/32" x 1-1/2" x .021" | |
| | 10 | 9/32" x 3/4" x .025" | |
| | 10 | 11/32" x 1-3/8" x .021" | |

## Hose Clamps

| OREGON | Qty. | Description | Product Code |
|---|---|---|---|
| 08-422 | 26 | Hose Clamps<br>No Refills Available | |
| | | Components | |
| | 8 | 16 mm (5/8") | |
| | 6 | 22 mm (7/8") | |
| | 4 | 25 mm (1") | |
| | 2 | 28 mm (1-1/8") | |
| | 2 | 35 mm (1-3/8") | |
| | 4 | 40 mm (1-1/2") | |

## Linchpins

| OREGON | Qty. | Description | Product Code |
|---|---|---|---|
| 08-423 | 50 | Linchpins | |
| | | Components | |
| 02-443 | 16 | 3/16" x 1-1/2" | |
| 02-444 | 18 | 1/4" x 1-3/4" | |
| 02-445 | 6 | 5/16" x 1-3/4" | |
| 02-446 | 10 | 7/16" x 1-3/4" | |

## Shoulder Bolts

| OREGON | Shoulder Length | Total Length | Product Code |
|---|---|---|---|
| 04-154 | 1- 5/16" | 2-1/16" | |
| 04-153 | 1-3/8" | 2-1/8" | |
| 04-157 | 1-7/16" | 2-3/16" | |
| 04-150 | 1-1/2" | 2-1/4" | |
| 04-159 | 1-9/16" | 2-5/16" | |
| 04-155 | 1-5/8" | 2-3/8" | |
| 04-152 | 1-3/4" | 2-1/2" | |
| 04-158 | 1-7/8" | 2-5/8" | |
| 04-160 | 2" | 2-3/4" | |
| 04-164 | 2-1/4" | 3" | |

- Thread run: 3/8 - 16
- Thread length: 3/4"
- Shoulder O.D.: 1/2"
- Zinc plated

| OREGON | Replaces | Description | Product Code |
|---|---|---|---|
| 08-023 | Universal | Shoulder Bolt Kit | |

- Fits all 1/2" hub sconse
- Adjustable length: 9/16" to 2-1/4"
- Contains set of 4

| | | |
|---|---|---|
| 04-163 | John Deere<br>M8469<br>M90937 | Shoulder Bolt<br>1/2" x 2-1/2" |

- Use with deck wheel #72-094
- Use on 38" deck & front wheels on 46" deck

## Shoulder Bolts

| OREGON | Replaces | Description | Product Code |
|---|---|---|---|
| 04-151 | Lawn Boy 603441 | Shoulder Bolt Kit | |

- Shoulder length: 1-17/32"
- Overall length: 1-31/32"
- Thread run: 3/8-16"

| | | | |
|---|---|---|---|
| 48-011 | Exmark 513547<br>Toro 99-2842 | Shoulder Bolt Kit | |

- Deck wheel bolt for Lazer Z models

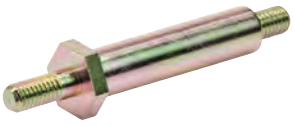

## Handle Bolts

| | | | |
|---|---|---|---|
| 02-050-0 | Snapper 9-1013 | Handle Bolt | |

- Curved head
- 5/16-18 thread
- Use with tightening knob #81-010

## Blade Bolts

| OREGON | Length | Product Code |
|---|---|---|
| 04-111 | 1" | |
| 04-114 | 1-1/4" | |
| 04-112 | 1-1/2" | |
| 04-116 | 1-3/4" | |
| 04-117 | 2" | |
| 04-119 | 2-1/4" | |
| 04-118 | 2-1/2" | |
| 04-121 | 3" | |

- 3/8-24 UNF
- Grade #5 raw

## Self Tapping Bolts

| | |
|---|---|
| 02-301 | 3/8"-16 x 1" |
| 02-304 | 5/16"-18 x 1-1/4" |

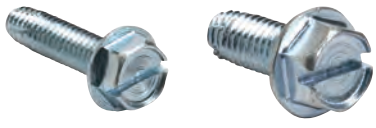

## Bar Stud Nut

| | | |
|---|---|---|
| 04-009 | Stihl 000-955 | Bar Stud Nut |

- 8 mm x 1.25"
- Fits 028A, 031AV, 034AV, 042AV, & 045AV

## Keps Nuts

| OREGON | Type | Fits Bolt Size | Product Code |
|---|---|---|---|
| 04-555 | UNC | 1/4-20 | |
| 04-556 | UNC | 3/8-16 | |

## Pal Nuts

| OREGON | Size | Product Code |
|---|---|---|
| 04-720 | 3/16" | |
| 04-725 | 1/2" | |

## Spindle Nuts

| OREGON | Type | Fits Bolt Size | Product Code |
|---|---|---|---|
| 04-001 | UNF | 14 mm x 1.5" | |
| 04-015 | UNF | 5/8"-18 | |

III

# Hardware Assortments, Nuts, Bolts, & Washers

## Flat Steel Washers

| OREGON | O.D. | I.D. | Thickness | Product Code |
|---|---|---|---|---|
| 09-238 | 2-1/4" | 3/8" | 1/8" | |
| 09-255 | 2-1/4" | 1/2" | 1/8" | |

## Fiber Washers

| OREGON | O.D. | I.D. | Thickness | Product Code |
|---|---|---|---|---|
| 09-009 | 2-1/4" | 3/8" | 1/8" | |
| 09-006 | 2-1/4" | 1/2" | 1/8" | |
| 09-011 | 2-1/4" | 5/8" | 1/8" | |

## Cupped Steel Washers

| OREGON | O.D. | I.D. | Thickness | Product Code |
|---|---|---|---|---|
| 09-901 | 2-1/4" | 1/2" | 1/8" | |
| 09-905 | 1-1/2" | 1/2" | 1/8" | |

## Machinery Bushings

| OREGON | O.D. | I.D. | Thickness | Product Code |
|---|---|---|---|---|
| 02-168 | 7/8" | 1/2" | | |

III

# SAFETY

Chainsaw Safety Overview . . . . . SFS 110–111
Safety Helmet and Footware . . . . SFS 112–113
Chainsaw Chaps . . . . . SFS 114
Rain Gear . . . . . SFS 115
Gloves . . . . . SFS 116
Safety Eyewear . . . . . SFS 117–120
Face Masks . . . . . SFS 120
Hearing Protection . . . . . SFS 121

## Most Common Chainsaw Injuries

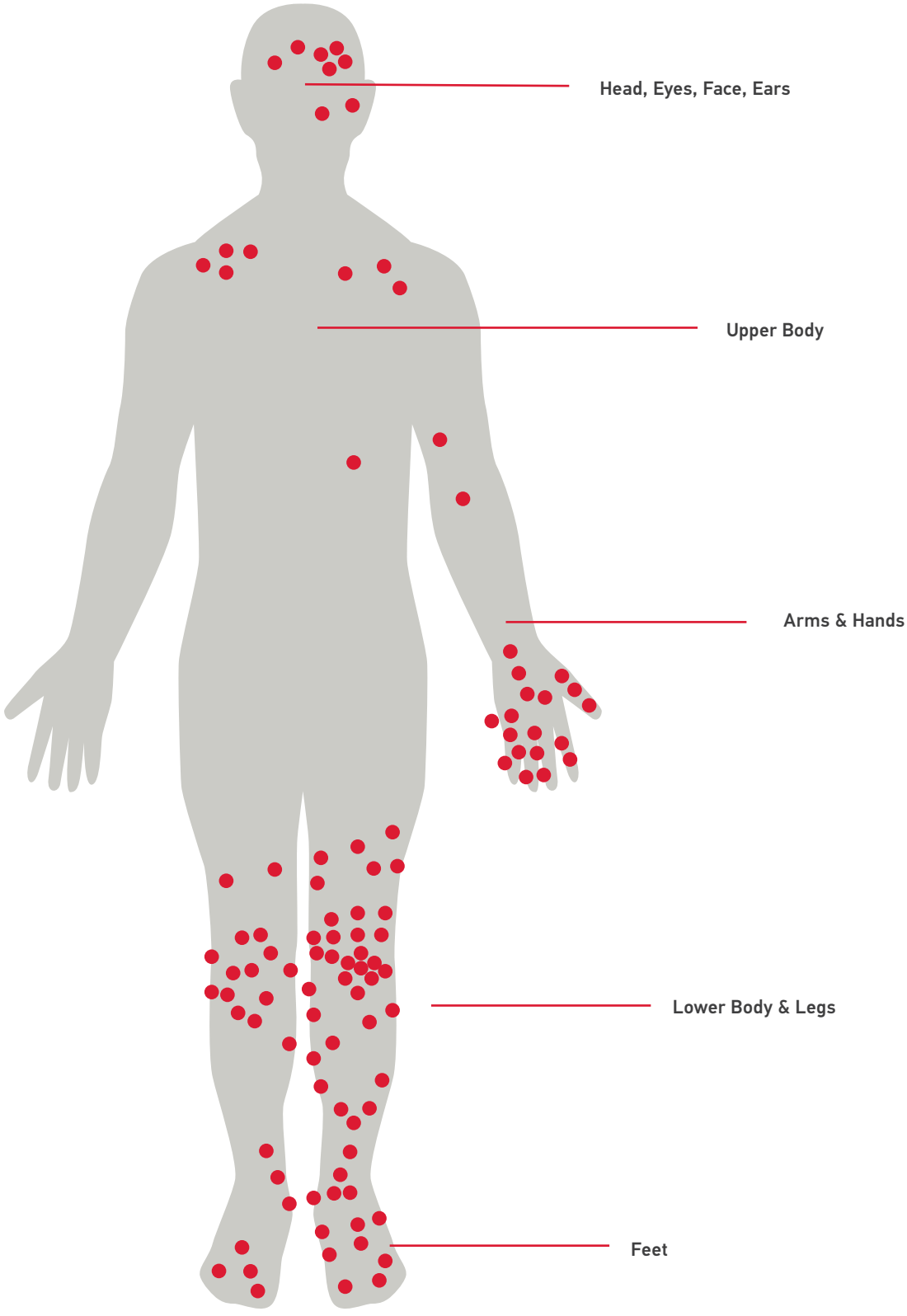

## Recommended Chainsaw Protective & Safety Clothing & Equipment

Head, Eyes, Face, Ears
- Safety helmet
- Ears & face protection
- Eye protection

Upper Body
- Surveyor's safety vest (non-protective)
- Premium rain shell (non-protective)
- Premium softshell rain jacket (non-protective)

Hands
- Chainsaw gloves

Lower Body
- Apron chaps
- Full-wrap chaps

Feet
- Rubber forestry boots
- Forestry boot insulated liner
- Premium leather boots

## Safety Helmet

| OREGON | Description | Product Code |
|---|---|---|
| 564101 | Professional Helmet | |
| | **Replacement parts** | |
| 564649 | Earmuffs | |
| 564579 | Visor | |
| 585673 | Visor Holder | |
| 564570 | Four-Point Suspension Kit | |
| 564580 | Sweatband | |

- High-impact & scratch resistant ABS helmet
- 20 ventilation holes & crown shape for optimum breathability
- UV-stabilized helmet shell
- Rain gutter
- Tested according to ANSI Z89.1-2003

- Four-point, easy-to-adjust harness
- Highly absorbent, removable, & washable sweatband

- Anti-slip headband
- Easy-to-use “pull-push” system for precise snug-fit

- Durable stainless steel mesh visor
- Strong flip up & down function
- Extended face protection
- Light-weight
- Assembles in seconds

- Easy up-and-down adjusting earmuff system
- Optimum, consistent noise attenuation (NRR value 24 dB)
- Comfortable ear cushions

IV

## Rubber Forestry Boot (US)

- Rubber boot with cotton canvas lining
- Nitrile oil, chemical, & slip resistant lug sole
- Achilles tendon, ankle, & metatarsal protection
- Rubber lace collar with safety reflective stripe
- ASTM F1818 chainsaw protection
- ASTM Class 1 steel toe cap
- Electric shock resistant

| Size | OREGON | Product Code |
|---|---|---|
| 8 | 295440-8 | |
| 9 | 295440-9 | |
| 10 | 295440-10 | |
| 11 | 295440-11 | |
| 12 | 295440-12 | |
| 13 | 295440-13 | |
| 14 | 295440-14 | |

## Neoprene Boot Liner

- Triple layer air moisture control system ventilates while wicking away perspiration
- Conforms to your feet – no need to buy larger boots
- Machine washable

| Size | OREGON | Product Code |
|---|---|---|
| S | 535364S | |
| M | 535364M | |
| L | 535364L | |
| XL | 535364XL | |

## Premium Leather Boots (US)

**Oregon Exclusive**

- High-quality breathable, oiled nubuck leather
- Waterproof
- Steel toe cap
- Steel anti-penetration plate in outsole protects against sharp objects
- Removable metal crampon for ultra grip, stability, & log control
- Breathable, fast-wicking lining for moisture & temperature control
- Breathable, removable, & washable foot bed

| Size | OREGON | Product Code |
|---|---|---|
| 8 | 295450-8 | |
| 9 | 295450-9 | |
| 10 | 295450-10 | |
| 11 | 295450-11 | |
| 12 | 295450-12 | |
| 13 | 295450-13 | |
| 14 | 295450-14 | |

## Apron Chaps (US)

- Conforms to ASTM F1897-08 & UL classified
- 8 layers breathable warp knit chainsaw protection
- 600 Denier oxford shell
- Adjustable length with top snaps on waist
- 2 straps for custom fit
- Machine washable

| OREGON | Description | Product Code |
|---|---|---|
| 563979 | 36" Length – Black Apron Safety Chaps (US) | |
| 564132-32 | 32" Length – Orange Apron Safety Chaps (US) | |
| 564132-36 | 36" Length – Orange Apron Safety Chaps (US) | |
| 564132-40 | 40" Length – Orange Apron Safety Chaps (US) | |

CLASSIFIED UL 17R2

## Full-Wrap Chaps (US)

- Conforms to ASTM F1897-08 & UL classified
- 8 layers breathable warp knit chainsaw protection
- 600 Denier oxford shell
- Adjustable length with top snaps on waist
- 3 straps for custom fit
- Machine washable

| OREGON | Description | Product Code |
|---|---|---|
| 564134-32 | Adjustable 32" Length – Premium Full-Wrap Safety Chaps | |
| 564134-36 | Adjustable 36" Length – Premium Full-Wrap Safety Chaps | |
| 564134-40 | Adjustable 40" Length – Premium Full-Wrap Safety Chaps | |

CLASSIFIED UL 17R2

## Premium Rain Apparel

The rain shell and softshell jacket may be used together for increased protection against the elements

### Rain Shell

- Hood snaps off or folds into fleece collar
- Articulated elbows
- Safety reflective piping front & back
- Ripstop nylon (210D) shell & taffeta/mesh lining
- Underarm vents
- Five large zippered pockets
- Adjustable waist, hem, & wrists

### Softshell Rain Jacket

- Anti-pill microfleece lined collar for greater comfort
- Drop back tail
- Locker loop inside neck
- Side insert gussets for greater mobility
- Underarm vents increase breathability & feature waterproof zippers
- Waterproof zippers on lower-front pockets, chest pocket, & sleeve hanky pocket
- Tech pocket with headphone loop inside left-chest
- Adjustable wrist straps help to seal out weather
- Elastic drawcord with toggle adjusters concealed inside waistband

| OREGON | Description | Product Code |
|---|---|---|
| *538539M* | Medium Premium Rain Shell | |
| *538539L* | Large Premium Rain Shell | |
| *538539XL* | X-Large Premium Rain Shell | |
| *538539XXL* | XX-Large Medium Premium Rain Shell | |
| *538540M* | Medium Premium Softshell Jacket | |
| *538540L* | Large Premium Softshell Jacket | |
| *538540XL* | X-Large Premium Softshell Jacket | |
| *538540XXL* | XX-Large Premium Softshell Jacket | |

## Chainsaw Gloves

- Smooth leather, high-visibility gloves
- Excellent chainsaw feel
- Durable palm area
- Close-fit wrist design
- Left-handed chainsaw protection

| OREGON | Description | Product Code |
|---|---|---|
| 91305M | Chainsaw Gloves – Medium | |
| 91305L | Chainsaw Gloves – Large | |
| 91305XL | Chainsaw Gloves – Extra Large | |

## Gloves

| OREGON | Description | Product Code |
|---|---|---|
| F14001 | Gloves – Cordova Cotton, Jersey Knit Wrist | |
| F16001 | Gloves – Cordova Cotton, Jersey Red-Lined, Slip-On Style | |
| 23101W | Gloves – Cordova Gold, Chore, Winged Thumb Knit Wrist | |
| F34001 | Gloves – Cordova Cotton, String Knit | |
| 4020L | Gloves – Cordova Latex, Disposable Glove, Large, Box of 100 | |
| 4020XL | Gloves – Cordova Latex, Disposable Glove, X-Large, Box of 100 | |
| 4090L | Gloves – Cordova Nitrile, Disposable Glove, Large, Box of 100 | |
| 4090XL | Gloves – Cordova Nitrile, Disposable Glove, X-Large, Box of 100 | |

IV

F34001

23101W

F14001

F16001

## Luminary™ Safety Eyewear

- Ultra light-weight design — just four-fifths of an ounce — makes it easy to wear all day, every day
- Patent-pending design includes unique, translucent temple insets for an electrifying new look
- Elastic temples help relieve pressure behind the ears & provide superior comfort
- Fingertip nosepiece reduces slippage, so glasses stay on securely
- Large, one-piece polycarbonate lens, with an anti-scratch coating, offers durable protection
- Wrap-around design, along with an integrated browguard, ensures complete protection
- Imprinted with Oregon® logo

| OREGON | Temple Color | Inset Color | Lens color | Product Code |
|---|---|---|---|---|
| 42-141 | Black | Clear | Clear | |
| 42-142 | Silver | Gray | Gray | |
| 42-143 | Black | Amber | Amber | |
| 42-144 | Black | Pacific Blue | Pacific Blue | |
| 42-145 | Black | Orange | Orange | |
| 42-146 | Silver | Gray | Silver Mirror | |
| 42-147 | Black | Blue | Blue Mirror | |

42-141

42-142

42-143

42-144

42-145

42-146

42-147

IV

| OREGON | Description | Product Code |
|---|---|---|

## Safety Eyewear

**42-131** **Blue Light Filter Lens**
(Amber-red color)
Black frame & adjustable legs
Meets ANSI Z87.1+ safety standard

**42-130** **Red Mirror Lens**
(Rainbow appearance)
Black frame & adjustable legs
Meets ANSI Z87.1+ safety standard

**42-132** **Amber-Yellow Mirror Lens**
Black frame & adjustable legs
Meets ANSI Z87.1+ safety standard

**42-133** **Gray Lens**
Black frame & adjustable legs
Meets ANSI Z87.1+ safety standard

**42-134** **Silver Mirror Lens**
Black frame & adjustable legs
Meets ANSI Z87.1+ safety standard

**42-136** **Clear Lens**
Black frame & adjustable legs
Meets ANSI Z87.1+ safety standard

OREGON Description Product Code

## Starlite – Safety Eyewear

Unitary scratch-resistant lens has two distinct viewing areas, each with 9.75 base curvature, delivering a wider range of vision. Deep universal-fit temples provide side protection equal to that of eyewear with large sideshields.

**42-139** **Starlite**
Blue mirror lens with gray frame
Oregon® logo on leg
Meets ANSI Z87.1+ safety standard
99.9% UVA & UVB protection

**42-138** **Starlite**
Gray lens with gray frame
Oregon logo on leg
Meets ANSI Z87.1+ safety standard
99.9% UVA & UVB protection

**42-137** **Starlite**
Clear lens with clear frame
Oregon logo on leg
Meets ANSI Z87.1+ safety standard
99.9% UVA & UVB protection

## Eyewear Protection

Impact and scratch resistant lens with integrated sideshields wraps around for wide field of vision. Adjustable and racheting temples for custom fit. Molded in browguard for protection above eyes. Meets ANSI Z87.1+ standards and 99.9% UVA/UVB protection.

**42-163** **Coverall Eyewear**
Covers prescription eyewear

**42-135** **Clear Goggles**
Allows full vision in all directions
Fits over regular eye glasses
Meets ANSI Z87.1+ safety standard

## Scorpion-Mag™ Safety Eyewear

Built in bifocal, contemporary styling, adjustable and racheting legs, soft grip nose piece, black frame with clear lens, and free "Scorpion's Tail" retainer included. Meets ANSI Z87.1+ standards and 99.9% UVA/UVB protection.

**42-152** **Scorpion-Mag – Clear Safety Eyewear**
2.0 Diopter magnification

OREGON Description Product Code

## Venom Head Gear with Visor

Fang-shaped Venom Visor is contoured to provide complete protection from head to chin. Tension adjustment ensures that raised visor stays in place.

**42-160** **Venom Head Gear & Visor**
Three-part adjustment system
Meets ANSI Z87.1+ standards

## Truair Disposable Respirator Masks

N95 NIOSH-approved; has exhalation vent to reduce hot air build up. Two non-latex elastic head straps plus adjustable nosepiece give secure fit 95% filtration against aerosols free of oils below PEL.

**42-161** **Vented Respirator Mask**
10-Pack

N95 NIOSH-approved; non-latex elastic head straps plus adjustable nosepiece give secure fit. 95% filtration against aerosols free of oils below PEL.

**42-162** **Respirator Mask**
20-Pack

| OREGON | Description | Product Code |
|---|---|---|

## Hearing Safety

**42-561-0** **Light-Weight, Red Earmuffs**
Comfortable protection
Soft & wide PVC cushions
Adjustable cup height
NRR: 21DB

**42-560-0** **Light-Weight, Yellow Earmuffs**
Comfortable protection
Soft & wide PVC cushions
NRR: 24DB

IV

IV

IV

IV

OREGON®

# Lawn & Garden Parts

# LG

## Sections LG


★ **New Products and Illustrated Parts Lists**
Cautions & Warnings . . . 2–3
2019 New Products . . . 4–39
Illustrated Parts Lists . . . 40–175

A/B **Replacement Parts A–B**
Air Filters . . . 176–222
Bearings & Bushings . . . 223–249
Belts . . . 250–339
Blade Adaptors . . . 340–343
Blades: Overview, by Length, Universal, OEM Replacements, and Edgers . . . 344–591

C/N **Replacement Parts C–N**
Carburetor Parts . . . 592–674
Centrifugal Clutches . . . 675
Chain Roller Parts . . . 676
Chain Saw & Cut-Off Saw Parts . . . 677–693
Commercial Parts . . . 694–698
Control Cables . . . 699–723
Drive Parts . . . 724–728
Electrical Parts . . . 729–744
Engine Parts . . . 745–760
Fuel Line & Accessories . . . 761–780
Grass Bags . . . 781–782
Hedgetrimmer Parts . . . 783
Ignition Parts . . . 784–791
LInkage, Jacks, & Hardware . . . 792–801
Miscellaneous Parts . . . 802–805
Mufflers . . . 806–811

O/S **Replacement Parts O–S**
Oil Filters . . . 812–820
Pulleys . . . 821–841
Seats . . . 842–845
Snow Thrower Parts . . . 846–863
Spark Plugs . . . 864 –868
Spindles . . . 869–910
Sprayers . . . 911–912
Springs . . . 913–914
Starters, Starter Parts, and Starter Rope . . . 915– 937
Steering Parts . . . 938–941
Switches . . . 942–951

T/W **Replacment Parts T–W**
Tiller Parts . . . 952–954
Tires, Tubes, & Tire Chains . . . 955–965
Timmer Lines & Heads . . . 966–1013
Trimmer Brush Cutter Blades . . . 1014–1015
Trimmer & Blower Parts . . . 1016–1028
Wheels . . . 1029–1047

X **Cross References**
Briggs & Stratton X-Reference . . . 1048–1071
OEM X-Reference . . . 1072–1168
Aftermarket X-Reference . . . A1–A48

# Cautions & Warnings

## Attention Dealers

Oregon® urges you to read and follow all of these safety guidelines when selecting, installing, servicing or operating any outdoor power equipment. Encourage your customers to do the same.

## Air Filters

**CAUTION:**

- Shut off engine before servicing or making any adjustments.
- Disconnect battery at negative terminal. (for electric start engines only)
- Remove and ground spark plug wire
- Refer to owner's manual and follow safety warnings

## Belts

**WARNING:**

- Never operate equipment without original guards securely in place

**CAUTION:**

- Shut off engine before servicing or making any adjustments
- Disconnect battery at negative terminal. (for electric start engines only)
- Remove and ground spark plug wire
- Refer to owner's manual and follow safety warnings

## Blades

**WARNING:**

Before servicing or removing blades

- Remove and ground spark plug wire
- Disconnect battery at negative terminal. (for electric start engines only)
- Refer to owner's manual and follow safety warnings
- Do not substitute any other bolt for the blade retaining bolt. Blades and blade retaining bolts are specially made for this application
- Proper torque must be used when tightening the blade retaining bolt; refer to owner's manual. If this safety precaution is not followed, the blade could come off during operation

While mowing

- Immediately inspect blade if abnormal vibration occurs

**WARNING:**

- Properly support and secure mower when replacing blade.
- To avoid possible injury, always wear proper eye and hand protection when servicing mower blade.
- Unbalanced or warped blades can cause damage to the mower and/or personal injury.
- Inspect the blade(s) and replace damaged blades before operating the mower

## Brush & Grass Blades

**WARNING:**

- Check that cutting attachment shields are properly located and in good condition. Never remove, modify, or in any way compromise the cutting attachment shield.
- Read and follow all instructions supplied by the manufacturer of the trimmer/brushcutter.
- Rigid blades must be used only on brush cutters designed to accommodate blades. Never use a metal cutting attachment on a brushcutter without a shoulder harness, properly mounted barrier handlebar and cutting attachment shield in good condition.
- Never remove the cutting attachment shield.
- Be certain that replacement cutting attachments are fitted properly with regard to the direction of rotation, the size of the mounting bolt and the size of the arbor.
- Do not install Oregon metal blades on any brushcutter capable of spinning the blade faster than 10000 RPM.
- Check the condition of cutting attachments frequently. Always replace cutting attachments that are cracked, bent, or warped – even if such damage appears to be superficial. Never attempt to repair damaged cutting attachments by welding or bending.
- Always wear eye, face, leg and foot protection during operation.
- Keep bystanders and pets at least 50 feet away in all directions. Always clear the work area of rocks, glass, wire, nails or other foreign objects that can be picked up and thrown by the rotating cutting attachment.
- Sharpen or maintain the cutting attachment according to instructions packaged with the attachment.
- Use cutting attachments to cut only the types of material for which the attachment is designed.
- Disconnect power to electrically powered trimmer/brushcutters before performing any service.
- **Do Not install metal blades on curved shaft trimmers**.

## Attention Dealers

Oregon® urges you to read and follow all of these safety guidelines when selecting, installing, servicing or operating any outdoor power equipment. Encourage your customers to do the same.

### Flywheel Key

**WARNING:**

- Do not strike the flywheel with a hammer or hard object because the flywheel may shatter during later operation.

**CAUTION:**

- Remove and ground spark plug wire
- Disconnect battery at negative terminal. (for electric start engines only)
- Refer to owner's manual and follow safety warnings

### Fuel Caps

**WARNING:**

- Never operate equipment without fuel cap in place
- Allow engine to cool before removing fuel cap

### Other Fuel Related Components

**WARNING:**

Gasoline and its vapors are extremely flammable. Fire or explosion can cause severe burns or death.

- Never smoke when working on fuel system components
- Keep gasoline away from sparks, open flame, pilot lights, and other ignition sources
- Shut off fuel before removing the fuel filter

### Spark Plug Removal

**CAUTION:**

- Remove and ground spark plug wire
- Disconnect battery at negative terminal. (for electric start engines only)
- Refer to owner's manual and follow safety warnings
- Allow engine to cool before removing spark plug

### Throttle Cable

**CAUTION:**

- Wear eye protection and gloves when opening package and handling throttle cable
- Disconnect battery at negative terminal. (for electric start engines only)
- Refer to owner's manual and follow safety warnings.

### Trimmer Line & Trimmer Head

**WARNING:**

Wear eye and hearing protection:

- Thrown objects and loud noise can cause severe eye injury and hearing loss.
- Wear eye protection meeting ANSI Z87.1 standards and ear protection when operating this unit.
- Use a full face shield when needed.

Keep bystanders away:

- Keep all bystanders, especially children and pets, at least 50 feet (15m) from the operating area.

Thrown objects and rotating cutter can cause severe injury:

- Do not operate without the cutting attachment shield in place. Keep away from the rotating cutting attachment.
- Do not install Oregon®trimmer heads on any trimmer capable of spinning the attachment faster than 10000 RPM.
- Refer to owner's manual and follow safety warnings
- Refer to trimmer line installation instructions provided with aftermarket trimmer heads.

(See Trimmer Lines & Heads section for additional Cautions and warnings specific to Trimmers & Brushcutters)

# 2019 New Products

| OREGON | Replaces | Description | Product Code |
|---|---|---|---|

## Air Filter – Ariens

| | | | |
|---|---|---|---|
| **30-211** | 21548000 | **Foam Pre-Filter** – NEW<br>Fits Briggs & Stratton 92200, 112200, 12A900-12T899, & 128700-129799 series; John Deere 14PZ, 14SZ, JS20, & JS30 & selected engines on JA60, JA65, JS60, JS61, & JS63; Toro 20323, 20835, 20836, & 29639 | |

## Air Fliters – Briggs & Stratton

| | | | |
|---|---|---|---|
| **30-208** | 4216<br>5088<br>5088H<br>5088K<br>5099<br>698369<br>Craftsman SPA8S1062853001 | **Foam Air Filter** – NEW<br>Fits Briggs & Stratton 9B902, 98902, 98982, 10A902, 10B902 and 10A982<br>Length: 5-1/8", Width: 2-7/8" | |
| **30-210** | 595191 | **Foam Pre-Filter** – NEW<br>Use with Oregon 30-168 Air Filter | |
| **30-211** | 4147<br>493537<br>493537S<br>5064<br>5064H<br>5064K<br>Ariens 21548000<br>John Deere LG493537S | **Foam Pre-Filter** – NEW<br>Use with Oregon 30-710 air filter | |

## Air Filters – Echo

| | | | |
|---|---|---|---|
| **30-618** | 130310-39730 | **Air Filter** - NEW<br>Fits Echo CS3500, CS4200, & CS420<br>Height: 2-11/50", outer diameter: 2-1/2", inner diameter: 1-3/4" | |
| **30-621** | A226-000291 | **Air Filter** - NEW<br>Echo CS350TES | |

| OREGON | Replaces | Description | Product Code |
|---|---|---|---|

## Air Filters – Echo

| | | | |
|---|---|---|---|
| **30-625** | 130310-38331 | **Air Filter** - NEW<br>Fits Echo CS440, CS4400, CS450, CS510, CS520, & CS530<br>Height: 1-3/8", length: 2-1/2", outer diameter: 2-1/2",<br>inner diameter: 1-3/4" | |
| **30-620** | P021-016371 | **Air Filter** - NEW<br>Fits Echo CS600 | |
| **30-619** | A226-000070 | **Air Filter** - NEW<br>Fits Echo CS6702 & CS680S | |
| **30-624** | A226000350<br>A226000351<br>A226000470<br>A226000471<br>A226000472 | **Air Filter** - NEW<br>Fits Echo PB251, PB255, PB265, PE280, SRM266, & SRM280<br>Length: 3-1/8", width: 3-1/8", height: 3/8" | |
| **30-616** | 13030508360<br>13030508361 | **Air Filter** - NEW<br>Fits Echo PB60H, PB460, PB600, PB601, PB750 &<br>PB755 series blowers; Shindaiwa EB633<br>Length: 10-3/8", width: 2-7/8", height: 1-11/32" | |
| **30-617** | A226000031<br>A226000032 | **Air Filter** - NEW<br>Fits Echo 400, 500, 600, & 700 series backpack blowers<br>Length: 4-5/32", width: 2-5/8", height: 1-3/8" | |

## Air Filters – Exmark

| | | | |
|---|---|---|---|
| **30-655** | 127-9252<br>Toro 127-9252 | **Air Filter** – NEW<br>Toro Timecutter with 42 & 50 decks and V-Twin engines<br>Length: 6-1/8", width: 3", height: 3-3/16" | |
| **30-656** | 116-0164<br>Toro 117-0390 | **Air Filter** – NEW<br>Fits Exmark Lazer Z S series with 48 & 60 deck, Lazer Z E<br>series with 60 deck, Lazer Z X series with 60 & 72 deck, and<br>Quest with 52 deck; Toro Commercial Z Master G3 74901,<br>74926, 74937, 74943CP, 74951, 74956CP, 74977, & 74956<br>Height: 4-1/2", outer diameter: 2-1/2" | |

# 2019 New Products

| OREGON | Replaces | Description | Product Code |
|---|---|---|---|

## Air Filters – Honda

| | | | |
|---|---|---|---|
| **30-206** | 17211-Z8B-901<br>17211-ZL8-003<br>17211-ZL8-023 | **Air Filter** – NEW<br>Fits: GC135, GCV135, GC160, GCV160, GC190, GCV160, GS190, & GSV190<br>Length: 5", width: 4-1/2", height 1" | |
| **30-613** | 17211-Z8B-901 | **Air Filter** – NEW<br>Fits: GC135, GCV135, GC160, GCV160, GC190, GCV160, GS190, & GSV190<br>Length: 5", width: 4-1/2", height: 1" | 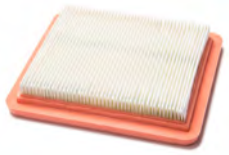 |

## Air Filters – Husqvarna

| | | | |
|---|---|---|---|
| **30-622** | 505126303<br>505126306 | **Air Filter** – NEW<br>Fits Husqvarna 555, 560XP, CS2258, & CS2260<br>Length: 3", width: 2-1/2", height: 1-3/8" | |
| **30-634** | 544 08 08-02 | **Air Filter** – NEW<br>Fits Husqvarna 445 445E 450, & 450E chainsaws | |
| **30-631** | 544 18 16-02<br>506 36 72-03 | **Air Filter** – NEW<br>Fits Husqvarna K750<br>Length: 5", width: 4-1/2", height: 1-3/8" | 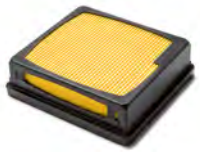 |
| **30-627** | 525 47 06-01<br>525470602 | **Air Filter** – NEW<br>Fits Husqvarna K750<br>Length: 5", width: 4-1/2", height: 1-3/8" | |
| **30-645** | 503 81 45-01<br>503 81 45-02<br>503 72 52-01 | **Air Filter** – NEW<br>Fits Husqvarna 362, 362EPA, 362 Special, 362XP, 365, 365EPA, 365 Special, 365 Special EPA, 371, 371EPA, 372, 372EPA, & 372XPW chainsaws | |
| **30-630** | 503 81 45-03 | **Air Filter** – NEW<br>Fits Husqvarna 362, 365, 371, & 372<br>Length: 3-1/2", width: 2-7/8" | |
| **30-637** | 501 80 71-05<br>501 80 71-01<br>501 80 71-02<br>501 80 71-06<br>501 80 71-03 | **Air Filter** – NEW<br>Fits Husqvarna 61, 181, 266, 281, & 288<br>Length: 3-1/2", Width: 2-7/8" | |

| OREGON | Replaces | Description | Product Code |
|---|---|---|---|

## Air Filters – Husqvarna

| | | | |
|---|---|---|---|
| **30-648** | 503 89 82-01 | **Air Filter** – NEW<br>Fits Husqvarna 51 & 55<br>Length: 4", width: 3-1/2", height: 2" | |

## Air Filter – Kawasaki

| | | | |
|---|---|---|---|
| **30-224** | 11013-0727<br>11013-7050<br>99999-0383 | **Air Filter** – NEW<br>Fits Kawasaki FR541V-FR600V<br>Length: 5-7/8", width: 2-3/4", height: 3-1/4" | |

## Air Filters – Kohler

| | | | |
|---|---|---|---|
| **30-212** | 14 083 15-S | **Air Filter** – NEW<br>Fits Kohler XT650 & XT675<br>Length: 4-1/4", width: x 3-1/2", height: 1/2" | |
| **30-225** | 20 083 02<br>20 083 02-S<br>20 083 06<br>20 083 06-S<br>Ariens 21541600<br>Craftsman 24642<br>Cub Cadet KH-20 883 02-S1<br>Cub Cadet OCC-20 083 02<br>Husqvarna 577513401<br>Toro 98018 | **Air Filter** – NEW<br>Fits Cub Cadet LTX1040 & LTX1045; Kohler SV470S-SV620;<br>Toro 13AX60RG744 & 13AX60RH744 lawn tractors<br>For Courage single series 15 thru 22 HP engines<br>Length: 6-3/4", width: x 5-3/8 “, height: 1-3/8" | |
| **30-605** | 17 083 23-S<br>17 083 04-S<br>17 083 07-S | **Air Filter** – NEW<br>For Kohler CH270<br>Length: 2-1/2", height: 3-7/8" | |
| **30-606** | 17 083 21-S<br>17 083 03-S<br>17 883 01-S1 | **Air Filter** – NEW<br>For Kohler CH395 & CH440<br>Length: 3", height: 4-3/8" | |

# 2019 New Products

| OREGON | Replaces | Description | Product Code |
|---|---|---|---|

## Air Filters – Kohler

| | | | |
|---|---|---|---|
| **30-609** | 47 883 03-S1 | **Air Filter Combo, Filter with Pre-Filter** – NEW<br>For Kohler CV, CH, CV24-CV740, & CH730-CH740; 17 thru 25 HP Command horizontal and vertical engines<br>Length: 7", height: 2-1/2" | |
| **30-608** | 14 083 09-S | **Foam Air Filter** – NEW | |

## Air Filter – Mitsubishi

| | | | |
|---|---|---|---|
| **30-498** | 505 30 92-01<br>KA40046AA | **Air Filter** – NEW<br>Fits Mitsubishi TL20, TL23, TL26, TL33, TL43 TL52, & TU26<br>Length: 7-1/4", width: 4-3/16", height: 1" | |

## Air Filters – MTD

| | | | |
|---|---|---|---|
| **30-207** | 951-14627<br>751-14627 | **Air Filter** – NEW<br>For POWERMORE Premium OHV Engine Series 140 cc<br>Length: 6-2/3", width: 4-4/5", height: 1-1/2" | |
| **30-209** | 951-14628 | **Air Filter** – NEW<br>Fits 5T65RU, 5T65RUA, 1T65NUB, & 5T65VUA engines<br>Length: 4/5", width: 1-1/10", height: 1-1/3" | |
| **30-610** | 937-05065A<br>951-12260<br>751-12260<br>937-05065 | **Air Filter** – NEW<br>Fits Huskee 13W2775S031 & 4P90JUB;<br>Yardman 13A2785S001 & 4P90JUB<br>For MTD 420cc OHV Engines<br>Length: 6-2/3", width: 4-4/5", height: 1-1/2" | |
| **30-611** | 753-06417 | **Foam Air Filter** – NEW<br>Fits Troy Bilt TB22EC, TB2MB, & TB32EC; Bolens BL110 & BL160; Remington RM2510, RM2520, RM2560, RM2570, & RM2599; Murry M2500, M2510, MS2550, & MS2560; Yard Man Y25, Y2500, Y2550EC, Y2700EC, Y2900EC, Y60, YM21CS, & YM71SS | |

## Air Filters – Oleo-Mac, Efco

| | | | |
|---|---|---|---|
| **30-640** | 61200025AR | **Air Filter** – NEW<br>Fits SP38, SP42, SP380, & SP440 | |

| OREGON | Replaces | Description | Product Code |
|---|---|---|---|

## Air Filters – Oleo-Mac, Efco

| | | | |
|---|---|---|---|
| **30-629** | 61120018R | **Air Filter** – NEW<br>Fits Oleo Mac 746, 753, & 755 brush cutters; Efco 8460, 8530IC, 8535, 8535 ERGO, & 8550 BOSS brush cutters<br>Length: 7-1/4", width: 4-3/16", height: 1" | |

## Air Filter – Red Max

| | | | |
|---|---|---|---|
| **30-652** | 577633001<br>57763301<br>577633001 | **Foam Pre-Filter** – NEW<br>Fits Red Max BCZ230TS, BCZ2450, BCZ2460, BCZ260, BCZ2650, BCZ2660, BCZ3050, & BCZ3060 | |

## Air Filters – Stihl

| | | | |
|---|---|---|---|
| **30-220** | 1140 140 4401 | **Air Filter** – NEW<br>Fits MS 311, MS 362, & MS 391 chainsaws<br>Length: 4-3/8", width: 3-5/8", height: 1-7/8" | |
| **30-221** | 1145 140 4400 | **Air Filter** – NEW<br>Fits MS 201 T chainsaws<br>Length: 4-7/16", width: 3", height: 3/4" | |
| **30-223** | 4148 141 0300 | **Air Filter** – NEW<br>Fits FS 240 C, FS 240 RC, FS 260 C, FS 260 RC, FS 360 C, FS 410 C, FS 460 C, & FS 460 RC | |
| **30-639** | 1125-160-1612<br>1125-120-1626 | **Air Filter** – NEW<br>Fits Stihl 034, 036, MS340, & MS360 | |
| **30-644** | 4229-120-1800<br>4229 124 1500 | **Air Filter** – NEW<br>Fits Stihl BG45, BG46, BG55, BG65, BR45, SH55, & SH85<br>Length: 3", width: 2-3/8", height: 1/2" | |
| **30-643** | 4180-120-1800 | **Air Filter** – NEW<br>Fits Stihl FC100, FC110, FC90, FC95, FR130, FS90R, FS100, FS100ARX, FS110, FS130, FS310, FS87, FS90, FT100, FX130, HL100, HL90, HL95, HT100, HT101, HT130, HT131, KM100, KM110, KM130, KM90, & SP90<br>Length: 2-5/8", width: 3", height: 1/2" | |

# 2019 New Products

| OREGON | Replaces | Description | Product Code |
|---|---|---|---|

## Air Filters – Stihl

| | | | |
|---|---|---|---|
| **30-653** | 0000-141-0300 | **Foam Pre-Filter** – NEW<br>Fits Stihl 044, 046, 064, 066, 084, 088, MS440, MS441, MS460, MS640, MS650, MS660, MS780, & MS880 | |
| **30-222** | 4144 124 2800 | **Foam Pre-Filter** – NEW<br>Fits: Stihl KM56, KM56R, KM56C, & KM56RC Kombi engines; FC56, FC56C, FC70, & FC70C edgers; FS40, FS40C, FS50, FS50C, FS50L, FS56, FS56C, FS56R, FS56RC, FS70, FS70C, & FS70RC trimmers; HT56 & HT56C hedge trimmers<br>Length: 3", width: 2-3/8", height: 1/4" | |

## Air Filter – Toro

| | | |
|---|---|---|
| **30-657** | 120-4308<br>127-9193 | **Air Filter** – NEW<br>Fits Toro XLS 380 lawn tractor, Timecutter SS3200, SS3216, SS4216, & ZS3200S<br>Length: 6-1/4", width: 2-1/2", height: 3-1/4" |

## Air Filter – Wisconsin Robin (Subaru)

| | | |
|---|---|---|
| **30-650** | 20B-32610-H7<br>20B-32610-J7 | **Air Filter** – NEW<br>Fits Robin EX35-40<br>Length: 7-1/4", width: 4-3/16", height: 1" |

## Bushing – MTD

| | | |
|---|---|---|
| **72-080** | 941-0706 | **Flanged Wheel Bushing** - NEW<br>OD: 1", ID: 5/8", Width: 1" |

| OREGON | Replaces | Size | Description | Type | Product Code |
|---|---|---|---|---|---|

## Belt – Briggs & Stratton

| | | | | | |
|---|---|---|---|---|---|
| **75-517** | L 708044 | | **Premium** – V-Belt – NEW | | |

## Belts – Exmark

| | | | | | |
|---|---|---|---|---|---|
| **75-509** | 109-7299 | 3/8" x 36" | **Premium Belt** – Lawn Mower Drive - NEW<br>Fits Exmark ECXKA21 commercial 21 | | |
| **75-510** | 103-4244 | | **Premium Belt** – V - NEW<br>Fits Exmark NAV20KC and NAV27KC models | | |
| **75-513** | 126-6626 | | **Premium Belt** – V - NEW<br>Fits Exmark RAE708GEM48300, RAS710CKC48300, RAX651GKA484A3 | | |

| OREGON | Replaces | Size | Description | Type | Product Code |
|---|---|---|---|---|---|
| **Belts – Exmark** | | | | | |
| **75-514** | 109-9023 | 5/8" x 219 1/4" | **Premium Belt** – Deck Belt – NEW<br>Exmark Next Lazer Z and Lazer Z AS with 72" deck | | |
| **75-516** | 116-3111 | 5/8" x 157-3/4" | **Premium Belt** – Deck – NEW<br>Exmark Vantage stand-on mowers with 52" deck | | |
| **75-515** | 126-2538 | 5/8" x 163 1/2" | **Premium Belt** – Deck – NEW<br>Exmark Turf Tracer X series walk behinds with 52" deck (2015–2016) | | |
| **115-704** | 126-2538 | 5/8" - 163 1/2 | **Premium Belt** – Deck – NEW<br>Exmark 52" Turf Tracer, X-Series | | |
| **115-705** | 126-2539 | 5/8" - 173 3/4" | **Premium Belt** – Deck – NEW<br>Fits Exmark 60" Turf Tracer, X-Series | | |
| **115-706** | 126-0783 | 5/8" - 136 1/3" | **Premium Belt** – Deck – NEW<br>Fits Exmark 48" Turf Tracer, S-Series | | |
| **Belt – Honda** | | | | | |
| **75-501** | 22431-VG3-N01 | 35" - 3/8" | **Replacement Belt** – Blade Drive – NEW<br>Wrapped clutching | | |
| **Belt –Lawn-Boy** | | | | | |
| **115-703** | 110-9429 | 32-1/10 X 3/8" | **Premium Belt** – Blade Belt – NEW<br>10634, 10732, 10734, 17732, 17734 & fits all 20-inch self-propelled Lawn-Boy models (2008–2013) | 1 | |
| **Belts – MTD** | | | | | |
| **75-502** | 54-04260 | 34-1/8 - 3/8" | **Premium Belt** – Deck – NEW<br>Wrapped, clutching two-stage snow throwers and walk-behind mowers | 1 | |
| **75-518** | 754-05106<br>954-05106<br>754-05106A | 1/2" x 60" | **Premium Belt** – Deck – NEW<br>Wrapped Clutching<br>Fits 28" Decks (2017 and newer) | 1 | |

# 2019 New Products

## Blades – Country Clipper

| | OREGON | OEM No. | Length | Center | Outer | C to C | W / T | Off | Lift | Prod. Code |
|---|---|---|---|---|---|---|---|---|---|---|
| | **92-180** NEW | H-2882 | **16-15/16** | 5/8 | | | 2.50/.203 | 5/16 | 1 | |
| (3) for 48" deck. Notched high-lift | | | | | | | | | | |
| | **92-179** NEW | H-2387 | **18-3/8** | 1/2 | | | 2.50/.203 | 5/16 | 3/4 | |
| (3) for 52" deck, (2) for 36" deck. low-lift | | | | | | | | | | |
| | **92-154** NEW | H-2883 | **18-3/8** | 5/8 | | | 2.50/.203 | 5/16 | 1 | |
| (3) for 52" deck, (2) for 36" deck high-lift, notched blade | | | | | | | | | | |
| | **92-166** NEW | H-2885 | **20-15/16** | 5/8 | | | 2.50/.203 | 5/16 | 1 | |
| (3) for 60" deck, (2) for 41" cut high-lift, notched blade | | | | | | | | | | |
| | **92-181** NEW | H-2886 | 20-15/16 | 5/8 | | | 2.50/.203 | 5/16 | 1 | Fusion® |
| (3) for 60" deck, (2) for 41" cut high-lift, notched blade | | | | | | | | | | |
| | **92-178** NEW | H-2501 | **25** | 1/2 | | | 2.50/.203 | 5/16 | 1-1/4 | |
| (3) for 72" deck, rolled high-lift | | | | | | | | | | |

## Blade – Cub Cadet

| | | | | | | | | | | |
|---|---|---|---|---|---|---|---|---|---|---|
| | **98-099** NEW | 942-04312 | **21-1/4** | 5/8 | 3/8 | 3 | 2 .50/.138 | 7/16 | 1-1/8 | |

(2) for 42" deck, star center hole. 2-in-1 blade side discharges and mulches. Fits two-blade 42" lawn tractors and RZT mowers (1997 and newer). For Troy-Bilt, MTD, MTD Gold, Bolens, White Outdoor, Yard Machines, Yard Man, and Huskee lawn tractors

## Blades – Exmark

| | | | | | | | | | | |
|---|---|---|---|---|---|---|---|---|---|---|
| | **92-919** NEW | 103-6386-S | **16-1/4** | 15/16 | | | 3.00/.203 | 0 | 5/8 | |
| (2) blades for 32" deck, 3 blades for 48" deck. low-lift | | | | | | | | | | |
| | **92-912** NEW | 103-6461 | **17-1/2** | 15/16 | | | 3.00/.203 | 3/8 | 1 | |
| (3) blades for 50" deck, high-lift | | | | | | | | | | |

## Blades – Exmark

| | OREGON | OEM No. | Length | Center | Outer | C to C | W / T | Off | Lift | Prod. Code |
|---|---|---|---|---|---|---|---|---|---|---|
| (3) for 56" cut, notched blade, high-lift | **92-913** NEW | 109-6462-S | **19-1/2** | 15/16 | | | 3.00/.203 | 3/8 | 1 | |
| (2) for 42" deck, Navigator rear bagger, RHC | **92-921** NEW | 103-4210 | **22** | 7/8 | 1/4 | 3 | 2.75/.164 | 11/16 | 13/16 | |
| (3) blades for 72" deck, high-lift | **92-910** NEW | 109-6465-S | **24-11/16** | 15/16 | | | 3.00/.203 | 3/8 | 1 | |

## Blades – Gravely

| | | | | | | | | | | |
|---|---|---|---|---|---|---|---|---|---|---|
| (2) for 40" deck; (3) for 60" deck | **91-255** NEW | 089046 | **20-1/2** | 5/8 | | | 2.00/.250 | 0 | 5/8 | |
| (3) for 72" cut | **92-417** NEW | 09290600 | **24-1/2** | 5/8 | | | 2.50/.250 | 5/16 | 1-1/4 | |

## Blades – Honda

| | | | | | | | | | | |
|---|---|---|---|---|---|---|---|---|---|---|
| Upper blade for 21" walk behind mowers. Micro Cut. Fits Versamow HRX217, use with 91-519 | **191-518** NEW | 72531-VH7-000 | **21** | 7/8 | 7/16 | 3-1/16 | 4.75/.120 | 1 | 7/8 | |
| Lower blade for 21" walk behind mowers. Micro Cut. Fits Versamow HRX217, use with 91-518 | **191-519** NEW | 72511-VH7-000 | 21 | 1-1/4 | 3/8 | 3-1/2 | 2.50/.120 | 1/2 | 0 | |

## Blades – Husqvarna

| | | | | | | | | | | |
|---|---|---|---|---|---|---|---|---|---|---|
| (3) for 54" deck. Fits 54 in. PZ Series Zero Turn Riders | **95-095** NEW | 525525901 | **19** | 5/8 | | | 2.50/.250 | 0 | 1-1/4 | G3 |
| (2) for 42" cut. Yard Tractor and Zero Turn mowers | **95-623** NEW | 586918101<br>586918102 | **21** | 5 pt. Star | | | 2.50/.250 | 0 | 1-1/4 | |

# 2019 New Products

## Blades – Husqvarna

| | OREGON | OEM No. | Length | Center | Outer | C to C | W / T | Off | Lift | Prod. Code |
|---|---|---|---|---|---|---|---|---|---|---|
| | **195-093** NEW | 5868569 | **21** | 5 pt. Star | 3/8 | 1-7/8 | 2.25/.149 | 7/16 | 1 | |

Fits 42" ecks, Reaper Blade

| | | | | | | | | | | |
|---|---|---|---|---|---|---|---|---|---|---|
| | **195-089** NEW | 406712 | 21 | 5/8 | 3/8 | 1-7/8 | 2.25/.134 | 9/16 | 1-5/16 | |

Fits 21" Craftsman and Husqvarna walk behind mowers, 3 in 1 blade

## Blade – John Deere

| | | | | | | | | | | |
|---|---|---|---|---|---|---|---|---|---|---|
| | **91-080** NEW | M163983 | **20-15/16** | 15/16 | | | 2.75/.203 | 9/16 | 1-7/16 | |

(3) for 60 Inch deck, fits models John Deere 737, 757, 777, 797, 997, and 7 Iron, requires 3 for 60 Inch deck

## Blade – Kubota

| | | | | | | | | | | |
|---|---|---|---|---|---|---|---|---|---|---|
| | **92-184** NEW | K5559-34330 | **21-9/16** | 11/16 | | | 2.50/.250 | 9/16 | 1-1/8 | |

(2) for 42" Zero Turn mowers, Z122R

## Blades – MTD

| | | | | | | | | | | |
|---|---|---|---|---|---|---|---|---|---|---|
| | **98-152** NEW | 942-05052 | **17-1/4** | 5/8 5 pt. Star | | | 2.50/.164 | 9/16 | 1-3/16 | |

| | | | | | | | | | | |
|---|---|---|---|---|---|---|---|---|---|---|
| | **98-151** NEW | 942-05056 | **18-5/8** | 5/8 5 pt. Star | | | 2.50/.164 | 9/16 | 1-3/16 | |

| | | | | | | | | | | |
|---|---|---|---|---|---|---|---|---|---|---|
| | **98-067** NEW | 742-04312 | **21-1/4** | 5/8 5 pt. Star | | | 2.50/.164 | 9/16 | 1-3/16 | |

| | | | | | | | | | | |
|---|---|---|---|---|---|---|---|---|---|---|
| | **98-095** NEW | 942-04217 | **22** | 5/8 5 pt. Star | | | 3.15/.149 | 1/4 | 1-1/2 | |

2 in 1 blade for side discharge and bagging, fits lawn tractors and RZTs with 42" timing deck (2009 and newer)

## Blades – Progressive Turf

| | OREGON | OEM No. | Length | Center | Outer | C to C | W / T | Off | Lift | Prod. Code |
|---|---|---|---|---|---|---|---|---|---|---|
| | **91-594** NEW | 526615 | **5-1/4** | 3/4 | | | 2.50/.187 | 1/2 | 5/16 | |
| | **94-124** NEW | 526601 | **5-1/4** | 3/4 | | | 2.50/.187 | 1/2 | 5/8 | |
| | **94-121** NEW | 522360 | **23** | 1 | 9/16 | 6-1/2 | 2.50/.312 | 11/16 | 3/4 | |
| (3) for 65" decks, fits SDR-65, high-lift | | | | | | | | | | |
| | **94-122** NEW | 522364 | **24** | 1 | 9/16 | 6-1/2 | 2.50/.312 | 11/16 | 3/4 | |
| (4) for 90" deck. fits SDR-90, high-lift | | | | | | | | | | |
| | **91-593** NEW | 522372 | **27** | 1 | 9/16 | 6-1/2 | 2.50/.312 | 3/4 | 1-3/8 | |
| | **94-123** NEW | 522376 | **32** | 1 | 9/16 | 10 | 2.50/.312 | 13/16 | 3/4 | |

## Blades – Toro

| | | | | | | | | | | |
|---|---|---|---|---|---|---|---|---|---|---|
| 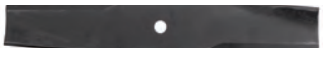 | **94-125** NEW | 1073196 | **16-1/2** | 5/8 | | | 2.50/.250 | 0 | 1-1/8 | |
| (3) for 48" deck. fits Toro Commercial Recycler Mowers | | | | | | | | | | |
| | **94-135** NEW | 110-0406<br>105779503 | **18** | 5/8 | | | 2.50/.250 | 0 | 11/16 | |
| (3) for 52" Z Force Turbo master decks | | | | | | | | | | |
| | **94-132** NEW | 105777903 | **18** | 5/8 | | | 2.50/.250 | 0 | 1-1/8 | |
| (3) for 52", 2 for 36" decks | | | | | | | | | | |

# 2019 New Products

## Blades – Toro

| | OREGON | OEM No. | Length | Center | Outer | C to C | W / T | Off | Lift | Prod. Code |
|---|---|---|---|---|---|---|---|---|---|---|
| | **94-133** NEW | 108-1128<br>105771603 | **20-1/2** | 5/8 | | | 2.50/.250 | 0 | 11/16 | |
| (3) for 60" rear discharge Z Master decks | | | | | | | | | | |
| | **94-138** NEW | 110-4701 | 20-1/2 | 5/8 | | | 2.50/.250 | 0 | 1 | |
| (3) for 60" Deck | | | | | | | | | | |
| | **94-126** NEW | 105771503 | 20-1/2 | 5/8 | | | 2.50/.250 | 0 | 1 | |
| (3) for 60" deck. fits Professional Z Master with 7-gauge side | | | | | | | | | | |
| | **94-130** NEW | 105777703 | **20-1/2** | 5/8 | | | 2.50/.250 | 0 | 1-1/8 | |
| (3) for 60" deck. Recycler decks | | | | | | | | | | |
| | **94-136** NEW | 110-0410<br>105771203 | **24-1/2** | 5/8 | | | 2.50/.250 | 0 | 11/16 | |
| (3) for 72" deck, low-lift | | | | | | | | | | |
| | **94-134** NEW | 110-0404<br>105771103 | 24-1/2 | 5/8 | | | 2.50/.250 | 0 | 1 | |
| (3) for 72" mid-flow deck, Z Master | | | | | | | | | | |
| | **94-131** NEW | 105777803 | 24-1/2 | 5/8 | | | 2.50/.250 | 0 | 1-1/8 | |
| (3) for 72" deck | | | | | | | | | | |

| OREGON | Replaces | Description | Product Code |
|---|---|---|---|

## Carburetor

| | | | |
|---|---|---|---|
| **50-034** | Kohler 14 853 49-S<br>Kohler 14 853 36-S | **Carburetor** - NEW<br>Fits Kohler XT650 & XT675 | |

## Carburetor Kits

| OREGON | OEM No. | Length | Center | Outer | C to C | W / T | Off | Lift | Prod. Code |
|---|---|---|---|---|---|---|---|---|---|

| | | |
|---|---|---|
| **49-921** | Zama GND-27 | **Diaphram and Gasket Kit** - NEW<br>Fits C1Q-D13 A, C1Q-DM14, C1Q-E5A, C1Q-E5B, C1Q-H14 A-B, C1Q-H17 A-D, C1Q-H19 A-C, C1Q-H27, C1Q-H32A, C1Q-H35, C1Q-H42, C1Q-H42, C1Q-H44, C1Q-H45, C1Q-M24, C1Q-M25, C1Q-M26, C1Q-M39, C1Q-W2A, C1Q-W5 A-C, C1Q-W6, A-C, & C1Q-W8 carburetors |
| **49-924** | Zama GND-35 | **Diaphram and Gasket Kit** - NEW<br>Fits most C10 type carburetors |
| **49-923** | Zama GND-55,<br>Zama GND-72,<br>Zama GND-91,<br>Zama GND-93, | **Diaphram and Gasket Kit** - NEW<br>Fits C1Q-S110B, C1Q-S110C, & C1Q-S110D |

Can't find what you're looking for?
Try us online to search the latest products available.

OregonProducts.com

# 2019 New Products

| OREGON | Replaces | Description | Product Code |
|---|---|---|---|

## Carburetor Parts –Diaphragms

| | | | |
|---|---|---|---|
| **49-922** | Zama A015002 | **Metering Diaphram -** NEW<br>Fits C1-17-01C & C1-17-02A carburetors | |
| **49-917** | Zama A015010<br>Zama A015018 | **Metering Diaphram -** NEW<br>Fits C1U & C1Q carburetors | |
| **49-918** | Zama A015052<br>Zama A015053<br>Zama A015046<br>Zama A015048<br>Zama A015070 | **Metering Diaphram -** NEW<br>Fits C1Q-S carburetors | |
| **49-919** | Zama A015006 | **Metering Diaphram -** NEW<br>Fits C1S carburetors | |
| **49-920** | Zama A015011<br>Zama A015016<br>Zama A015019<br>Zama A015041<br>Zama A015042<br>Zama A015044<br>Zama A015050<br>Zama A015077 | **Metering Diaphram -** NEW<br>Fits C1Q-S & C1U carburetors | |

## Carburetor Parts – Float Bowl Gaskets

| | | | |
|---|---|---|---|
| **49-608** | Honda 16010-ZE2-812 | **Float Bowl Gasket Kit -** NEW<br>Fits GX240, GX270, GX340, & GX390 | |

## Carburetor Parts – Primer Bulbs

| | | | |
|---|---|---|---|
| **49-609** | Briggs & Stratton 793382 | **Primer Bulb Assembly -** NEW<br>Fits most 10D000, 120000, 12A000, 12D000, & 12C000 model | |
| **49-611** | MTD 951-10639<br>MTD 951-10639A<br>MTD 951-10888B | **Primer Bulb -** NEW<br>Fits 161-JW, 161-JWA, 165-SU, 478-SU, 483-SU,<br>365-SUA, 490-SU, 365-SUB, 370-SUB, & 370-SUA<br>Height: 1", outer diameter: 1-5/8" | |

| OREGON | Replaces | Description | Product Code |
|---|---|---|---|

## Carburetor Parts – Primer Bulbs

| | | | |
|---|---|---|---|
| **49-612** | Husqvarna 505 30 67-01<br>Shindaiwa 68206-81430<br>Shindaiwa 20036-81670<br>Shindaiwa 70029-81480<br>Shindaiwa 188-121<br>Shindaiwa 123181-09560 | **Primer Bulb** - NEW<br>Fits Red Max/Shindaiwa AH230, AH231, AH242, AH2510, AHS231, AHS242, AHS2510, DH230, DH231, HT230, HT231, LE230, P230, P231, PB230, PB3410, C242, C282, C2510, EB240S, EB480, EB500, EB630, EB802, EB2510, EB3410, T231, T242, T282, & T3410; Walbro/Echo PB260, PB261, PB500H, PB650, PE2400, PE260, PE280, PE310, PE3100, PE311, SRM3001, SRM3010, SRM310, SRM3100, SRM311, SRM3110, SRM340, GT1100, & GT2200 |  |
| **49-610** | Walbro AYP47721,<br>Echo 12318110860<br>Echo 12318139130<br>Echo 3801081330<br>Echo 5213001400<br>Homelite 01183<br>Homelite 1183<br>Homelite 300780002<br>Homelite 308088001<br>Husqvarna 503936601<br>Husqvarna 530047721<br>Makita 168398-2<br>MTD 753-1185<br>MTD 791-180000B<br>MTD 791-181558<br>MTD 791-181801<br>MTD 791-683974<br>MTD 791-683974B<br>MTD 791-BQ03241<br>Poulan 530047721<br>Red Max 530047721<br>Ryobi 683974<br>Ryobi 791-683974 B<br>Stihl 4130 350 6200<br>Tanaka 6685139<br>Walbro 188-512<br>Walbro 188-512-1 | **Primer Bulb** - NEW<br>Fits Husqvarna K750 & K760 cut-off saws and many chainsaws, blowers, hedge trimmers, and string trimmers<br>Height: 1-5/16", outer diameter: 7/8" | |

## Chain Saw Parts – Chain Adjusters

| | | | |
|---|---|---|---|
| **02-137** | Husqvarna 501452702 | **Chain Adjuster** - NEW<br>Fits most 42, 44, 55, 55, Rancher, 133, 234, 238, 242, 340, 345, & 350 chainsaws | |
| **02-138** | Husqvarna 501537101 | **Chain Adjuster** - NEW<br>Fits most 61, 66, 181, 266, 268, 268 Special, 272 XP, 281, & 288 chainsaws | |
| **02-139** | Husqvarna 537 07 12-01 | **Chain Adjuster** - NEW<br>Fits Husqvarna 345, 346, 350, 350, 353, 357, & 359 | |

# 2019 New Products

| OREGON | Replaces | Description | Product Code |
|---|---|---|---|

## Chain Saw Parts – Chain Adjusters

| | | | |
|---|---|---|---|
| **02-136** | Husqvarna 530 01 58-26 | **Bar Adjuster Pin** - NEW<br>Fits Husqvarna 141 | |

## Control Cable – AYP

| | | | |
|---|---|---|---|
| **74-021** | AYP 158152<br>AYP 582991501<br>Husqvarna 582991501 | **Control Cable** - NEW<br>Fits AYP224110X92E0, 2244110X92E2, 224111X83E, 96114001500, 96114001501, 96114011800, HD6A22HWD, PR600N22S, PR600N22SH, 96114000311, 96114000312, 96114000313, 96114000314, 96114000315, 96114000316, 96114000317, 96114000403, and 96114001200<br>Cable Length: 55 1/2"<br>Conduit Length: 48" | |

## Control Cables – Honda

| | | | |
|---|---|---|---|
| **74-016** | 54530-VG3-D01 | **Brake Cable** - NEW<br>Fits HRR216, HRS216, HRT216 | |
| **74-018** | 54530-VK6-700 | **Brake Cable** - NEW<br>Fits HRC216K2, HRC216K3 | |

## Control Cables – MTD

| | | | |
|---|---|---|---|
| **73-802** | 746-04228A | **Speed Selector Cable** - NEW<br>For most MTD snow throwers<br>Length: 23" | |
| **73-800** | MTD 746-04396 | **Speed Selector Cable** - NEW<br>Length: 21.5" | |
| **74-020** | MTD 946-0957 | **Control Cable** - NEW<br>For most MTD push mowers<br>Conduit length: 37-1/4" | |

| OREGON | Replaces | Description | Product Code |
|---|---|---|---|

## Control Cables – MTD

| | | | |
|---|---|---|---|
| **74-019** | MTD 946-04092<br>MTD 746-04092 | **Deck Engagement Cable** - NEW<br>Use with MTD riding mowers<br>Conduit length: 26", inner wire length: 43" | |

## Control Cable – Toro

| | | | |
|---|---|---|---|
| **74-015** | 104-8676 | **Brake Cable** - NEW<br>For Toro 22" recycler, (2002–2009)<br>Cable length: 58", conduit length: 53-1/2" | |

## Engine Parts – Kohler Gaskets

| | | | |
|---|---|---|---|
| **49-603** | 17 755 06-S | **Gasket Set** - NEW<br>Fits CH260 & CH270 | 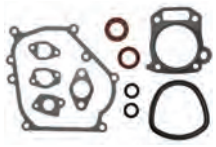 |
| **49-604** | 17 755 44-S | **Gasket Set** - NEW<br>Fits CH440 | |
| **49-605** | 17 755 43-S | **Gasket Set** - NEW<br>Fits CH395 | |
| **49-906** | 24 153 30-S | **Valve Cover Gasket** - NEW<br>Fits CH18, CH20, CH22, CH25, CH26, CH620, CH640, CH641, CH670, CH680, CH682, CH730, CH732, CH740, CH742, CH745, CH750, CH752, CV18, CV20, CV22, CV23, CV25, CV620, CV640, CV680, CV730, CV740, CV742, ECH730, ECH749, ECV740, ECV749, SV710, SV720, SV730, SV735, & SV740 | 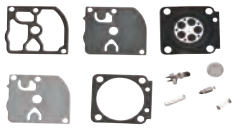 |
| **49-606** | Kohler 24 153 30-S | **Gasket Valve-cover** - NEW<br>Fits Kohler CH, CV, ECH, & SV series engines | |
| **49-607** | 24 841 04-S | **Head Gasket Kit** - NEW<br>Fits CH25, CH730, CH740, & CV25<br>For 25 HP engines | |

## Engine Parts – Kohler Miscellaneous Parts

| | | |
|---|---|---|
| **36-416** | 24 462 07-S | Dust Ejector Valve - NEW<br>Fits CH20, CH22, CH23, CH25, CH640, & CH670 |

# 2019 New Products

| OREGON | Replaces | Description | Product Code | |
|---|---|---|---|---|

## Fuel Lines

| | | | | |
|---|---|---|---|---|
| **07-145** | Husqvarna 532 40 11-35 | **Fuel Line** - NEW<br>For Husqvarna<br>Rear Emission | | |
| **07-146** | Husqvarna 532 40 11-37 | **Fuel Line** - NEW<br>For Husqvarna | | |
| **07-144** | Stihl 1121 358 7700 | **Fuel Line** - NEW<br>Fits Stihl 024, 026, MS240, & MS260 | | |
| **07-167** | Stihl 1123-141-8600 | **Impulse Line, Chainsaw** - NEW<br>Fits Stihl 021, 023, 025, MS210, MS210C, MS230, MS230C, MS250, & MS250C | | |
| **07-142** | Husqvarna 581493301<br>Red Max 579138304<br>Red Max 579138306<br>Red Max 579138307<br>Red Max 581493301 | **Fuel Line Kit** - NEW<br>Fits Red Max EBZ6500, EBZ6500RH, EBZ7500, EBZ7500RH, EBZ8500, EBZ8500RH, & HBZ2610 blowers; BCZ230TS, BCZ2460S, BCZ2460TS, BCZ2650S, BCZ2650TS, & BCZ2660TS brushcutters; HBZ2650F, HEZ2460F, & HEZ2460S edgers; PSZ2460 & PSZ2465S polesaws; LRTZ2460, SGCZ2460S, SRTZ2460, SRTZ2460F & TR2350S trimmers | | |

## Fuel Hose Clamp

| | | | | |
|---|---|---|---|---|
| **07-140** | Husqvarna 532 12 34-87 | **Hose Clamp** - NEW<br>For Husqvarna | | |

## Fuel – In-Line Fuel Filters

| | | | | |
|---|---|---|---|---|
| **07-141** | Husqvarna 506264111 | **In-Line Fuel Filter** - NEW<br>Fits Husqvarna 36, 40, 41, 42, 45, 50, 51, 61, 66, & 394<br>Inner diameter: 3/16" | | |
| **07-143** | Husqvarna 579 13 83-09 | **Fuel Filter Assembly** - NEW<br>Fits Red Max/Husqvarna 226R, 226RJ, & 236R | | |

| OREGON | Replaces | Description | Product Code |
|---|---|---|---|

## Fuel–In-Tank Fuel Filter

| | | | |
|---|---|---|---|
| **07-163** | Kohler 17 050 15-S<br>Kohler 17 050 20-S | **Fuel Tank Filter** - NEW<br>Fits Kohler Command Series CH260, CH270, CH395 & CH440<br>Length: 2-3/16", top outer diameter: 1-7/16",<br>bottom outer diameter: 1-3/16" | |

## In-Line Fuel Filter

| | | | |
|---|---|---|---|
| **07-164** | Kohler 24 050 13-S | **Fuel Filter** - NEW<br>Fits Kohler CH18-CH25, CH620-CH740, CH750, CH940-CH1000, CV17-CV25, CV670-CV750, CV940-CV1000, LH630-LH755, LV625-LV680, SV710-SV740, & SV810-SV840<br>Inner diameter: 1/4" | |
| **07-165** | Kohler 25 050 22-S | **Fuel Filter** - NEW<br>Fits KohlerCH11-CH16, CH18-CH25, CH410-CH450, CH620-CH730, CV13-CV25, CV430-CV493, CV670-CV730, SV470-SV740, TH16, TH18, TH520, & TH575<br>Inner diameter: 1/4" | |
| **07-166** | Honda 16910-ZE8-015 | **Fuel Filter** - NEW<br>Fits Honda engines GX100 KRS2, GX100U (KRS2, KRSB), GX160U1 VTH4, GX360K1, GX390U1 (VS49, VSD4, VTH4), GX610, GX610K1, GX610R1, GX610U1, GX620, GX620K1, GX620R1, GX620U1, GX630, GX670, GX670R, GX670U, GXV160UH2, GXV270, GXV340, GXV340A2, GXV340K1, GXV340K2, GXV340RT2, GXV340UA2, GXV340UT2, GXV390, GXV390A1, GXV390K1, GXV390RT1, GXV390UA1, GXV390UT1, GXV610, GXV610K1, GXV610R1, & GXV610U1 | |

## Fuel – Grommets

| | | | |
|---|---|---|---|
| **07-147** | Red Max T155185300<br>Red Max DP181767 | **Fuel Grommet** - NEW<br>For Red Max, Ryobi, Homelite, & Kawasaki<br>2 inlet | |
| **07-148** | Stihl 0000-930-2803<br>Stihl 0000-989-0516<br>Stihl 00009375004 | **Grommet with Hose** - NEW<br>Fits Stihl FS350, FS400, FS450, & FS480 | |

## Oil Seal

| | | | |
|---|---|---|---|
| **36-414** | Kohler 25 032 06-S | **Oil Seal** - NEW<br>Fits Kohler CH18, CH20, CH22, CH23, CH25, CH620, & CH640 | |

# 2019 New Products

| OREGON | Replaces | Description | Product Code |
|---|---|---|---|

## Grass Bag

**86-002** Honda 81320-VG0-013

**Grass Bag** - NEW
Fits Honda HRC216 & HRC215
Frame and Hardware not included

## Oil Filters

**83-001** Honda 15410-MFJ-D01

**Oil Filter** - NEW
Fits Bobcat 453 & 463 skid steer loaders, MT50, MT52, & MT55 mini-track loaders, 319, 320D, 321, 322, 323, 324, 418, E08, E10, E14, & E16 compact excavators, 2200 & 2300 utility vehicles; Caterpillar 300.9D, 301.4C, 301.7D, 302.2D, 302.4D, & 302.7D; Ditchwitch MX9, MX15, & MX27; Hitachi Zaxis 8, ZX17U-2, ZX8-2, JLG400CRT, 330CRT, & 260MRT; John Deere 322, 330, 332, 355D, 430, & 455 diesels, 655, 755, 756, 855, & 856 tractors, 1420, 1435, F735, F912, F915, F925, F932, F935, GX355, X495, X595, X740, X744, X748, X749, & HPX diesel Gators, 2500 & 2500A diesel Tri-Plex greens mowers, 2500B & 2500E hybrid diesel riding greens mowers, 2243, 2653, & 2653A diesel professional utility mowers, 2653B, 2020, 2020A, 2030, & 2030A Pro Gators; Kubota 316, 463, B7300, B7400, B7410, BX1500, BX1800, BX1830, BX1850, BX1860, BX1880, BX2230, BX2350, BX2360, BX2370, BX2380, BX23, BX24, BX25, G1800, G1900, G2000, G2160, G3200, GF1800, GF1800E, GR2100, GR2120, KX41-3, PC09, RTV500, & RTV900,
Height: 2-1/2", outer diameter: 2-5/8", thread: 20mm x 1.5mm
Microns: 20

Can't find what you're looking for?
Try us online to search the latest products available.

OregonProducts.com

## Pulleys – OEM Replacement Idlers

| OREGON | Replaces | Description | Product Code |
|---|---|---|---|
| **34-901** | AYP 197379 | **Flat Idler Pulley** - NEW<br>Fits Craftsman 944, 917<br>Poulan PB19546LT<br>Outer diameter: 5-3/8", inner diameter: 3/8", height: 1-5/8" | |
| **34-903** | AYP 532194327 | **Flat Idler Pulley** - NEW<br>Outer diameter: 3-1/2", inner diameter: 3/8", height: 1" | |
| **34-904** | AYP 539-132728 | **Flat Idler Pulley** - NEW<br>Fits Husqvarna CZ Series, RZ Series, & RZ4623<br>OD: 5-7/8", ID: 11/16", height: 1-59/64" | |
| **34-318** | AYP 146763 | **Idler Pulley** - NEW<br>AYP 146763<br>OD: 4-1/4", ID: 3/8", height: 11/16" | |
| **34-902** | AYP 194326<br>AYP 532194326 | **"V" Idler Pulley** - NEW<br>Fits AYP C20H42YT<br>Outer diameter: 3-1/2", inner diameter: 5/8" | |
| **34-905** | AYP 539113962 | **Pulley-Spindle** - NEW<br>Fits Husqvarna EZ, RZ, Z<br>Poulan PRO 461ZX<br>OD: 5-1/2", ID: 12 pt. hex | |
| **34-308** | Cub Cadet 756-3005 | **Flat Idler Pulley** - NEW<br>Fits Exmark Vantage S series mowers; Toro commercial walk-behinds with floating decks; Grandstand mowers<br>OD: 4-3/8", ID: 3/8", height: 7/8" | |
| **34-301** | Exmark 116-9639 | **Flat Idler Pulley** - NEW<br>Fits Exmark Lazer Z, Exmark 109-8590 & 116-9639<br>OD: 8-3/4", ID: 11/16", width: 1-5/8" | |
| **34-302** | Exmark 116-9639 | **Flat Idler Pulley** - NEW<br>Fits Exmark Metro, Quest, Viking, Lazer Z & Turf Tracer; Toro TimeCutter ZX, Z, ZX440, ZX480, & ZX525; Titan Z4800, Z5200, ZX5400, ZX5450, ZX6000, ZX6030, & ZX605<br>OD: 4-7/8", ID: 11/16", height: 3/4" | |

# 2019 New Products

| OREGON | Replaces | Description | Product Code | |
|---|---|---|---|---|

## Pulleys – OEM Replacement Idlers

| | | | |
|---|---|---|---|
| **34-308** | Exmark 93-1622 | **Flat Idler Pulley** - NEW<br>Fits Exmark Vantage S series mowers<br>OD: 4-3/8", ID: 3/8", height: 7/8" | |
| **34-309** | Exmark 1-633109<br>Exmark 116-4667<br>Exmark 1164667<br>Exmark 126-7685<br>Exmark 1267685<br>Husqvarna 539102610 | **Flat Idler Pulley** - NEW<br>OD: 6-3/4", ID: 11/16", height: 1-1/8" | |
| **34-313** | Exmark 126-9187<br>Exmark 116-4665<br>Exmark 126-9187 | **Flat Idler Pulley** - NEW<br>Fits Exmark Lazer Z<br>OD: 5-3/4", ID: 11/16", width: 1-1/2" | |
| **34-908** | Hustler 786848<br>Husqvarna 532196104 | **Pulley Flat Idler** - NEW<br>Outer diameter: 4", center hub: 5/8" | |
| **34-902** | Husqvarna 532194326 | **"V" Idler Pulley** - NEW<br>Fits AYP C20H42YT, PB19542LT, PB19546LT, PB19H42LT, PB195H46YT, PB19H42YT, PB20H42LT, PB20H42YT, PB20H46LT, PB22H42YT, PB22H46YT, and PB22H48YT<br>OD: 3-1/2", ID: 5/8" | |
| **34-308** | Toro 112895<br>Toro 93-1622<br>Wright Mfg. 71460006 | **Flat Idler Pulley** - NEW<br>For Exmark Vantage S series mowers;<br>Toro commercial walk-behinds with floating decks;<br>Grandstand mowers<br>OD: 4-3/8", ID: 3/8", height: 7/8" | |

| OREGON | Replaces | Description | Product Code | |
|---|---|---|---|---|

## Spark Plug Boots

| | | | |
|---|---|---|---|
| **36-425** | Echo 159012-03433 | **Spark Plug Boot** - NEW<br>For Echo Chain Saws & Power Blowers | |
| **36-423** | Echo A27000013 | **Spark Plug Boot** - NEW<br>Fits Echo PB265L & PPT265S | |
| **36-424** | Echo 159012-01620 | **Spark Plug Boot** - NEW<br>Fits Echo Chainsaws 280, 300, & 3000 | |
| **36-422** | Stihl 4128-405-1000 | **Spark Plug Boot** - NEW<br>Fits Stihl FS350, 400, 450, & 480 | |
| **36-427** | Makita 957-604-240 | **Spark Plug Boot** - NEW<br>Fits Makita DPC series | |
| **36-428** | Red Max 505 29 88-01 | **Spark Plug with Boot** - NEW<br>Fits Red Max 143RII, 226R, 226RJ, 236R, 532RBS Brush cutter | |

| OREGON | Product Code |
|---|---|

## Spindles – AYP, Husqvarna

**82-129** – NEW

**Replaces**
581650501

**Description**
- For Lawn Tractors
- Fits Husqvarna models, CTH 194, CTH 224T, CTCh 2646, CTH 2642TR, TC 238, & TC 242

OREGON Replaces Description Product Code

## Spindles – AYP, Husqvarna

**82-108** – NEW

**Replaces**

| | | |
|---|---|---|
| 187292 | 192870 | 539112057 |
| 192870 | 532187281 | 587125401 |
| 532192870 | 532187292 | 587253301 |
| 587125401 | 532192870 | |

**Description**

- For AYP 46", 48" & 54" decks
- 5 pt. star blade mount

## Spindles – Cub Cadet, MTD

**82-130** – NEW

**Replaces**
918-05137

**Description**

- Fits Cub CadetRZT-S54, MTD Z6600 & ZT-L54, Toro 13AX90RS848 & 13AX91RS848, Troy-Bilt Mustang 54 XP
- Height: 6-15/16", pulley outer diameter: 5-11/16"
- 6 pt. star blade mount

## Spindles – Cub Cadet, MTD

**82-128** – NEW

**Replaces**
918-04865A

**Description**

- Fits Cub Cadet LTX1045, LTX1046 & Z-force S 46; MTD 13AL771T004, 13AL78ST099, 13AL78ST299, 13AL795T004, 13AL795T057, 13AO785T058, 13AR91PT099, 13AR91PT299, 13AT915T004, 13AX771T004, 13AX791T031, 13AX90YT001, 13AX915T004, & 13WX791T031
- Height: 6", pulley outer diameter: 6-1/2"
- 6 pt. star blade mount
- Pulley and grease zerk included

OREGON Product Code

## Spindles – Cub Cadet, MTD

**82-127** – NEW

**Replaces**
918-06989

**Description**
- Fits MTD13AL78XT099, 13AL78XT299, & 13AL78XT055; Troy-Bilt TB46 & Horse XP
- Height: 6-3/4", pulley outer diameter: 6-1/4"
- Includes nut, spacer, & pulley.
- 6 pt. star blade mount
- No threads in housing, use self-tapping screws

**82-131** – NEW

**Replaces**
918-06991

**Description**
- Fits most MTD 200 & 700 series mowers with 42" deck
- Height: 6-3/4", pulley outer diameter: 5-1/2"
- 6 pt. star blade mount

**82-132** – NEW

**Replaces**
918-05078A

**Description**
- Fits Cub Cadet RZT-S46, MTD ZT-S46; Troy-Bilt Mustang XP 46 & Mustang Pivot S 46
- Height: 7-1/4" height, pulley outer diameter: 6-7/16"
- 6 pt. star blade mount

IMPORTANT: When installing spindles, follow all installation and maintenance instructions provided in the mowers owner/maintenance manual—including the correct torquing of the blade and pulley bolts/nuts as well as the lubrication of the spindle. Failure to do so may cause premature failure.

# 2019 New Products

OREGON Product Code

## Spindles – Cub Cadet, MTD

**82-104** – NEW

**Replaces**

| | |
|---|---|
| 618-06976 | 918-06976 |
| 618-06976A | 918-06976A |

**Description**

- Fits Cub Cadet LT42, LT42C, & LX42 with 42" deck; MTD 131PA1ZS099, CYT4220, & CYT4220SE with 42" deck
- Thread: 5/8"-18 UNG
- 6 pt. star blade mount

**82-105** – NEW

**Replaces**

| |
|---|
| 918-06977 |
| 918-06977A |

**Description**

- Fits Cub Cadet LT46 & LX46 with 46" deck; MTD 131AQ1ZT099, 13AQA1ZT299, & CYT4622SE with 46" deck
- Thread: 5/8"-18 UNG
- 6 pt. star blade mount

**82-106** – NEW

**Replaces**

| |
|---|
| 618-06981 |
| 918-06981 |

**Description**

- Fits Cub Cadet XT1-LT50 & XT2-LX50 with 50" deck; MTD CYT5023SE with 50" deck
- Thread: 5/8"-18 UNG
- 6 pt. star blade mount

**82-110** – NEW

**Replaces**

| | | |
|---|---|---|
| 618-04456 | 918-04456 | 918-04461 |
| 618-04456A | 918-04456A | 918-04461A |
| 618-04461 | 918-04456B | Toro 112-0460 |

**Description**

- Fits Cub Cadet LT1042; MTD Newer 700 series with 42" deck; Toro LX420 & LX425 (2006–2007)
- 6 pt. star blade mount



**IMPORTANT:** When installing spindles, follow all installation and maintenance instructions provided in the mowers owner/maintenance manual—including the correct torquing of the blade and pulley bolts/nuts as well as the lubrication of the spindle. Failure to do so may cause premature failure.

OREGON Product Code

## Spindles – Cub Cadet, MTD

**82-109** – NEW

**Replaces**

| | | |
|---|---|---|
| 618-04636 | 618-04865 | 918-04865A |
| 618-04636A | 618-04865A | |

**Description**

- Fits Cub Cadet LTX1045, LTX1046, & Z-force S 46; MTD 13AL771T004, 13AL78ST099, 13AL78ST299, 13AL795T004, 13AL795T057, 13AO785T058, 13AR91PT099, 13AR91PT299, 13AT915T004, 13AX771T004, 13AX791T031, 13AX90YT001, 13AX915T004, & 13WX791T031
- 6 pt. star blade mount
- Pulley and grease zerk included

## Spindles – Exmark

**82-101** – NEW

**Replaces**

120-6234

**Description**

- Fits ECKA30; Toro 30" TimeMaster

**82-102** – NEW

**Replaces**

116-3344

**Description**

- Cutter housing with bearings
- Fits Lazer Z E-Series, Pioneer S-Series, Turf Tracer S-Series, & Vantage S-Series

**82-103** – NEW

**Replaces**

126-4630

**Description**

- Cutter housing complete
- Fits RAE708, RAS710, RAS720, & RAS740

IMPORTANT: When installing spindles, follow all installation and maintenance instructions provided in the mowers owner/maintenance manual—including the correct torquing of the blade and pulley bolts/nuts as well as the lubrication of the spindle. Failure to do so may cause premature failure.

OREGON Product Code

## Spindles – Toro

**82-130** – NEW

**Replaces**
918-05137

**Description**
- Fits Cub Cadet RZT-S54; MTD Z6600 & ZT-L54; Toro 13AX90RS848 & 13AX91RS848; Troy-Bilt Mustang 54 XP
- Height: 6-15/16", pulley outer diameter: 5-11/16"
- 6 pt. star blade mount

**82-111** – NEW

**Replaces**
117-7439
117-7268

**Description**
- Fits Toro Time Cutter SS 5000 & SS 4200



IMPORTANT: When installing spindles, follow all installation and maintenance instructions provided in the mowers owner/maintenance manual—including the correct torquing of the blade and pulley bolts/nuts as well as the lubrication of the spindle. Failure to do so may cause premature failure.

OREGON | Description | Product Code

## Oregon® Backpack Sprayer – Replacement Parts

**605533** **Plastic Wand Kit with Nozzle, Backpack Sprayer** - NEW
Use with Oregon 518769 & 518771 backpack sprayers

**605531** **Carrying Strap, Backpack Sprayer** - NEW
Use with Oregon 518769 & 518771 backpack sprayers

**605532** **Filter Screen, Backpack Sprayers** - NEW
Use with Oregon 518769 & 518771 backpack sprayers

**605534** **Rubber Seals Kit, Backpack Sprayers** - NEW
Use with Oregon 518769 & 518771 backpack sprayers

**605535** **Seal Valve, Backpack Sprayer** - NEW
Use with Oregon 518769 & 518771 backpack sprayers

OREGON | Replaces | Description | Product Code

## Springs – E-Z Rake

**43-035** Honda 28442-ZH8-003
John Deere M128283
**Starter Spring** - NEW
Fits Honda GX100, GX120, GX160, GX200, GXV160, and 28442-ZH8-003
John Deere 180A, 180B, 180C, 220A, 220B, 220C, 260B, and 260C greensmowers

**05-027** Husqvarna 577 88 47-01
**String Trimmer Spring** - NEW
Fits BCZ 260TS

## Starter Gear

**43-037** Briggs & Stratton
**Starter Gear** - NEW
Fits Briggs & Stratton 210700 - 312799 Series & 20700 - 252799 Series
14-tooth gear

# 2019 New Products

| OREGON | Description | Product Code |
|---|---|---|

## Starter Pawls & Springs

| | | | |
|---|---|---|---|
| **43-035** | Honda 28442-ZH8-003<br>John Deere M128283 | **Starter Spring** - NEW<br>Fits Honda GX100, GX120, GX160, GX200 & GXV160;<br>John Deere 180A, 180B, 180C, 220A, 220B, 220C, 260B & 260C Greens mowers | |

## Starter Pulley

| | | | |
|---|---|---|---|
| **43-034** | MTD 951-11721<br>MTD 751-11721 | **Recoil Pulley** - NEW<br>Fits MTD Yard Man & Yard Machine | |

## Steering Parts – Ball Joints

| | | |
|---|---|---|
| **45-124** | Cub Cadet 923-0448A<br>MTD 723-0448<br>MTD 723-0448A<br>MTD723-0448AP<br>MTD 923-0448A<br>MTD OEM-723-0448<br>Toro 112-0917 | **Ball Joint**<br>Right-hand thread<br>Rubber grommet seal<br>RH female: 7/16 -20<br>RH male: 3/8 -24 |

## Steering Shafts

| | | | |
|---|---|---|---|
| **76-056** | Cub Cadet 738-04262 | **Steering Shaft** - NEW<br>For many lawn tractors | |
| **76-053** | Husqvarna 532 15 65-43 | **Steering Shaft** - NEW<br>For many lawn tractors | |
| **76-052** | Husqvarna 532 15 65-46 | **Steering Shaft** - NEW<br>For many lawn tractors | |
| **76-055** | MTD 938-05078 | **Steering Shaft** - NEW<br>For many lawn tractors | |

| OREGON | Replaces | Description | Product Code | |
|---|---|---|---|---|

## Steering Sector / Steering Gears

| | | | | |
|---|---|---|---|---|
| **76-051** | MTD 717-1550<br>MTD 717-1550A<br>MTD 717-1550B<br>MTD 717-1550C<br>MTD 717-1550D<br>MTD 717-1550E<br>MTD 917-1550E | **Steering Gear** - NEW<br>For many lawn tractors<br>20 tooth | | |
| **76-057** | MTD 617-04094 | **Steering Gear Assembly** - NEW<br>For many lawn tractors<br>24 tooth | | |
| **76-050** | MTD 717-04943 | **Pinion Gear** - NEW<br>For many lawn tractors<br>11 tooth | | |

Can't find what you're looking for?
Try us online to search the latest products available.

OregonProducts.com

# 2019 New Products

OREGON | Replaces | Description | Product Code

## Oregon® Trimmer Line, Green

- Fits all standard trimmer heads
- Long-lasting premium co-polymer
- Green color
- User-friendly donut limits tangles

| OREGON | Package Type | Footage | Product Code |
|---|---|---|---|
| **Square .095" Gauge** | | | |
| 69-001 – NEW | 15M Clamshell | 50' | |
| 69-004 – NEW | 1/2 lb. Clamshell | 120' | |
| **Square .105" Gauge** | | | |
| 69-005 – NEW | 1/4 lb. Clamshell | 50' | |
| 69-008 – NEW | 1/2 lb. Clamshell | 90' | |

| OREGON | Package Type | Footage | Product Code |
|---|---|---|---|
| **Round .095" Gauge** | | | |
| 69-012 – NEW | 15M Clamshell | 50' | |
| 69-010 – NEW | 1/2 lb. Clamshell | 140' | |
| **Round .105" Gauge** | | | |
| 69-013 – NEW | 15M Clamshell | 50' | |
| 69-014 – NEW | 1/2 lb. Clamshell | 120' | |

## Oregon® Trimmer Line, Red

- Fits all standard trimmer heads
- Long-lasting premium co-polymer
- Red color
- User-friendly donut limits tangles

| OREGON | Package Type | Footage | Product Code |
|---|---|---|---|
| **Square .095" Gauge** | | | |
| 69-592 – NEW | 15M Clamshell | 50' | |
| 69-593 – NEW | 1/2 lb. Clamshell | 120' | |
| **Square .105" Gauge** | | | |
| 69-594 – NEW | 15M Clamshell | 50' | |
| 69-559 – NEW | 1/2 lb. Clamshell | 90' | |

| OREGON | Package Type | Footage | Product Code |
|---|---|---|---|
| **Round .095" Gauge** | | | |
| 69-596 – NEW | 15M Clamshell | 50' | |
| 69-597 – NEW | 1/2 lb. Clamshell | 140' | |
| **Round .105" Gauge** | | | |
| 69-598 – NEW | 15M Clamshell | 50' | |
| 69-599 – NEW | 1/2 lb. Clamshell | 120' | |

| OREGON | Replaces | Description | Product Code |
|---|---|---|---|

## Trimmer Parts – Echo

| | | | |
|---|---|---|---|
| **42-061** | P021001392<br>P021001393 | **Trimmer Guard Shield** - NEW<br>Fits: SRM225, SRM2400, SRM230, SRM2100, SRM210, SRM260, SRM261, & SRM280<br>Fits 1" to 1-1/4" Shafts | |

## Wheels – Pneumatic Wheel Assemblies

| | | | |
|---|---|---|---|
| **72-342** | Exmark 130-8364 | **Wheel Assembly** - NEW<br>Fits MGS481CKA36200<br>MGS481CKA36200<br>MGS481CKA36200<br>MGS481CKA48300<br>MGS481CKA48300<br>MGS481CKA48300<br>Size: 13 x 650-6<br>Mounted on: Steel and Rubber<br>Ball Bearing: 1"<br>Tread: Super Turf<br>Hub: Offset, Steel<br>4 Ply | |

## Wheels – Semi-Pneumatic, Flat-Free Wheel Assemblies

| | | | |
|---|---|---|---|
| **72-341** | Exmark 110-9965 | **Flat Free Wheel Assembly** - NEW<br>11x4.00 -5 tire<br>Thread: smooth<br>Mounting on: Steel and Rubber<br>Rolling Bearing: 3/4"<br>Tread: Smooth<br>Center Hub<br>Hub Length: 92 mm | |
| **72-347** | Toro 105-1814 22" Recycler | **Flat Free Wheel Assembly** - NEW<br>8 x 1-3/4"<br>Tread: Radial<br>Center Hub Length: 1-3/4"<br>Bore: 1/2" | |
| **72-348** | Toro 22" Recycler, 20012, 20016 (2002-2005) and 20019 | **Flat Free Wheel Assembly** - NEW<br>12 x 1-3/4"-2<br>Bore: 1/2"<br>Tread: Radial<br>Hub length: 1-3/4" | |

# IPL'S


Mower Sulky Parts . . . . . 42–43

## Residential Mowers

AYP/Husqvarna/Sears . . . . . 44–47

Cub Cadet . . . . . 48–59

John Deere . . . . . 60–83

MTD (Bolens/Troy-Bilt/YardMan). . . . . 84–87

Murray . . . . . 88–91

Toro . . . . . 92–99

## Commercial Mowers

Bobcat . . . . . 100–101

Bunton . . . . . 102–107

Dixie Chopper . . . . . 108–109

Encore . . . . . 110–113

Exmark . . . . . 114–117

Ferris . . . . . 118–119

Grasshopper. . . . . 120–135

Hustler (Excel). . . . . 136–137

Scag . . . . . 138–163

## Honda Engines

GX160 . . . . . 164–165

GX240 . . . . . 166–167

GX340 . . . . . 168–169

GX390 . . . . . 170–171

GXV120. . . . . 172–173

GXV160. . . . . 174–175

## Mower Sulky Parts List

| Part No. | Description | Product Code |
|---|---|---|
| 42-172 | Bearing Cap | |
| 42-173 | Axle Bushing | |
| 42-174 | Bearing | |
| 42-175 | Clip (10-Pack) | |
| 42-176 | Pivot End Caps | |
| 42-178 | Spring (10-Pack) | |

| Part No. | Description | Product Code |
|---|---|---|
| 42-183 | Wheel Bearing Kit | |
| 42-187 | Bronze Pivot Bushing | |
| 42-219 | Wheel Bearing with Cap | |
| 42-192 | Bushing Sleeve | |
| 42-218 | Wheel Assembly | |
| 42-195 | Caster Cap | |

### 42-049

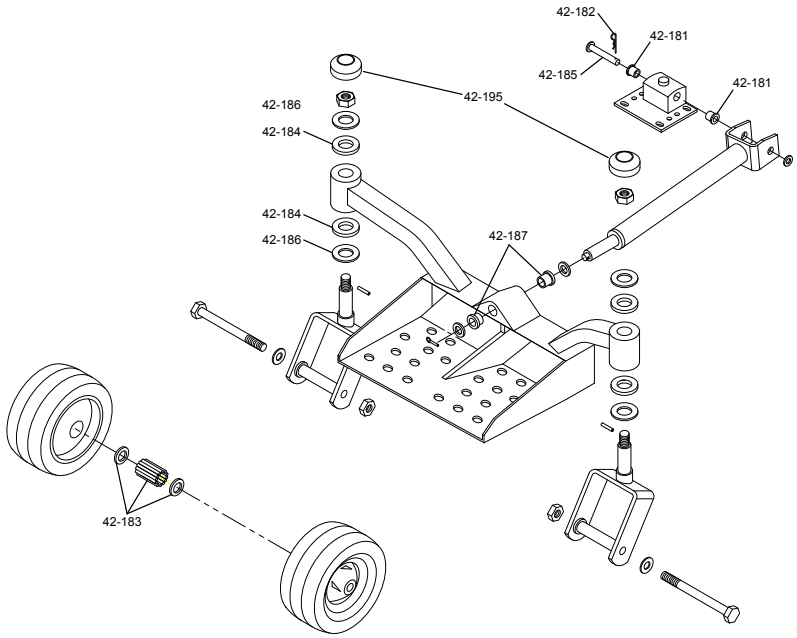


### 42-050

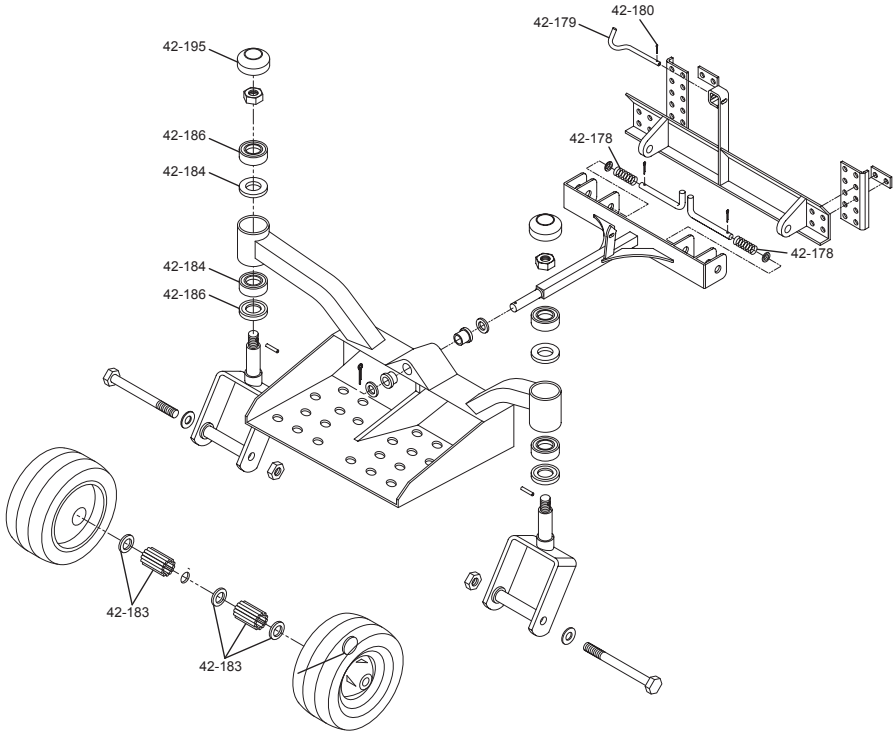

## Mower Sulky Parts List

### 42-066

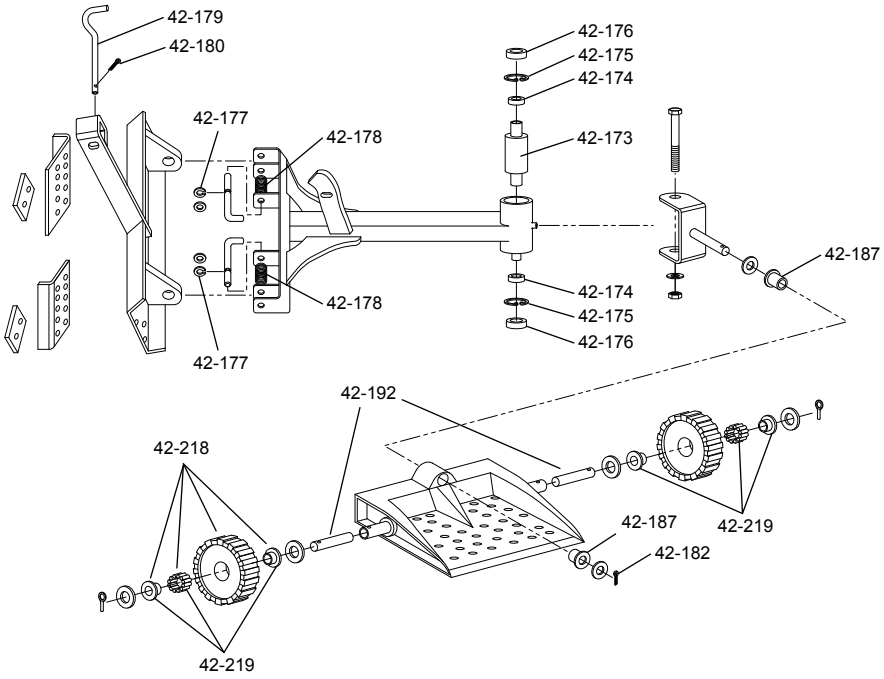


### 42-079

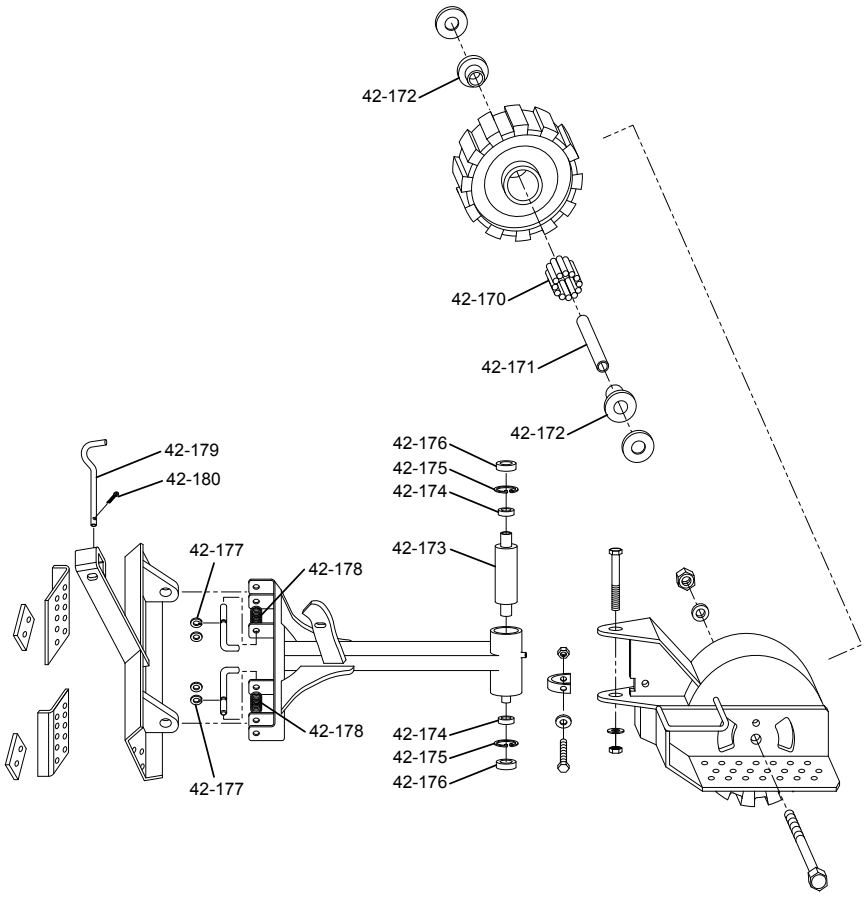

## AYP 36" to 46" Decks (2 Blades)

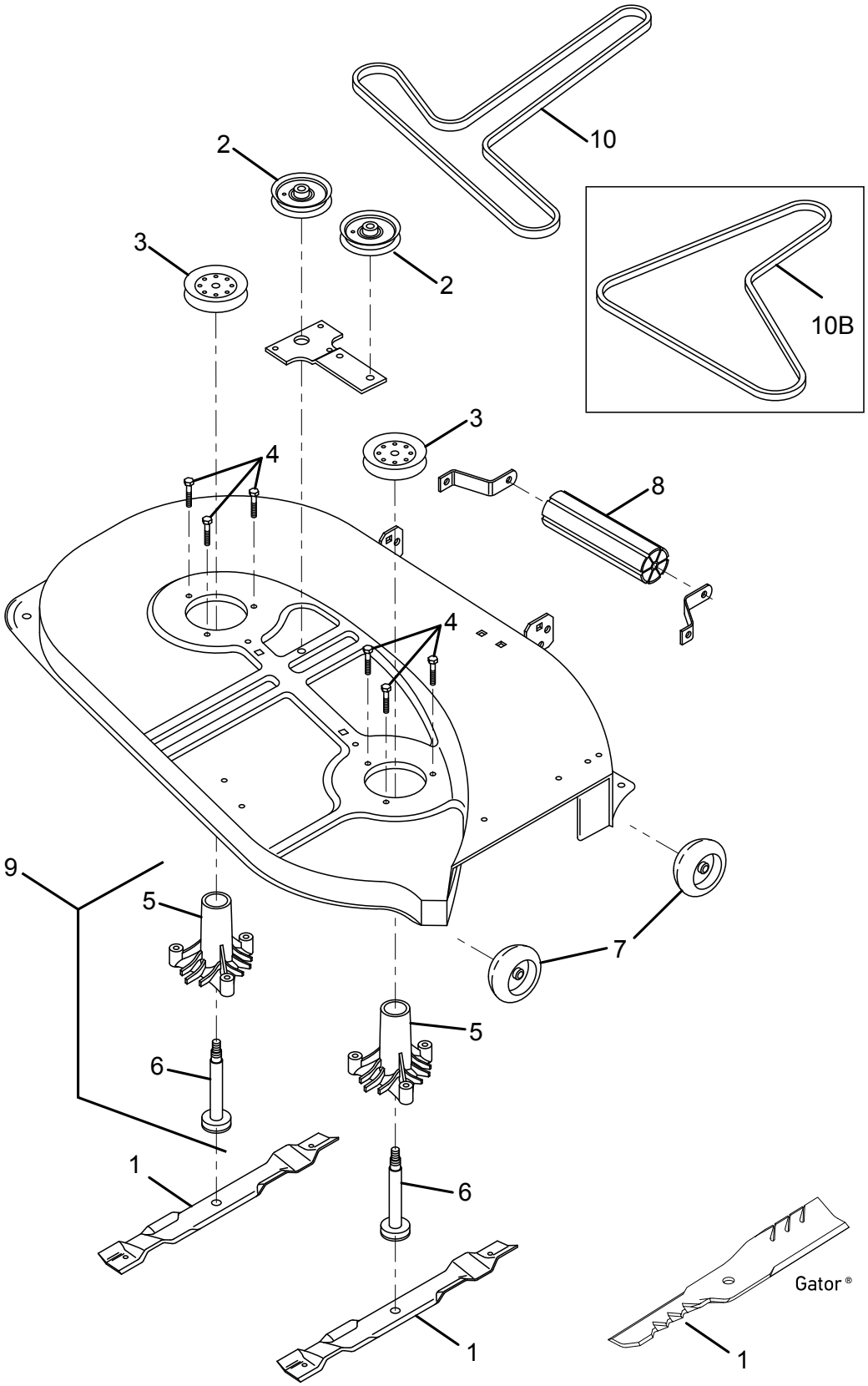

## AYP 36" to 46" Decks (2 Blades)

| № | Part No. | OEM No. | Description |
|---|---|---|---|
| **Blades for 36" Decks with 5 pt. Star Center Hole** | | | |
| 1 | 95-036 | 127841 | Standard, 18-3/16" |
| | 95-026 | | Heavy-Duty Version of 95-036 |
| | 595-613 | | Gator® G5™, 18-3/16" |
| **Blades for 38" Decks with 3/8" Round Center Hole** | | | |
| 1 | 95-031 | 143978X | High-Lift, 19-9/32" |
| **Blades for 38" Decks with 5 pt. Star Center Hole** | | | |
| 1 | 195-033 | 138497 | 100-Series, 19-9/32" |
| | 95-038 | | Heavy-Duty Version of 95-033 |
| | 95-047 | 131322 | High-Lift, 19-9/32" |
| | 95-601 | | Gator G3™, 19-9/32" |
| | 595-601 | | Gator G5, 19-9/32" |
| **Blades for 42" Decks with 5 pt. Star Center Hole** | | | |
| 1 | 195-032 | 138791 | 100-Series, 21" |
| | 195-039 | | Heavy-Duty Version of 95-032 |
| | 195-048 | 138791 | 100-Series, Sand 21" |
| | 195-005 | 134149 | 100-Series, Mulching 21" |
| | 96-900 | | Gator G3, 21" |
| | 596-900 | | Gator G5, 21" |
| **Blades for 46" Decks with 5pt. Star Center Hole** | | | |
| 1 | 195-070 | 405380 | 100-Series, High-Lift 22-7/8" |
| | 95-074 | 403107 | Mulching, 22-7/8 |
| | 95-370 | | Low Lift, 22-7/8" |
| | 96-370 | | Gator G3, 22-7/8" |
| | 596-370 | | Gator G5, 22-7/8" |
| **Replacement Parts** | | | |
| 2 | 78-051 | 187584 | Flat Idler Pulley, OD: 5-1/2", FOD: 4-3/4", W: 1-9/16", FW: 1-3/16", ID: 3/8" |
| | 78-052 | 175820 | Flat Idler Pulley, OD: 4-1/2", FOD: 3-5/8", W: 1", FW: 5/8", ID: 3/8" |
| | 78-053 | 173901 | Flat Idler Pulley, OD: 4-5/16", FOD: 3-1/2", W: 1-3/8", FW: 1", ID: 3/8" |
| | 78-054 | 173437 | Flat Idler Pulley, OD: 3-3/4", FOD: 2-7/8", W: 1-3/8", FW: 3/4, ID: 3/8" |
| | 34-046 | 173438 | Flat Idler Pulley, OD: 3-7/8", FOD: 3-1/16", W: 1", FW: 3/4", ID: 3/8" |
| | 78-043 | 105313X | Flat Idler Pulley, OD: 4-1/4", FOD: 3-3/4", W: 1-5/16", FW: 7/8", ID: 3/8" |
| | 78-013 | 177968 | Flat Idler Pulley, OD: 4", FOD: 3-1/16", W: 1", FW: 3/4", ID: 3/8" |
| | 78-014 | 189993 | V-Idler Pulley, OD: 4-1/2", W: 13/16", ID: 3/8" |
| | 34-049 | 139245 | V-Idler Pulley, OD: 3-1/2", W: 13/16", ID: 3/8" |
| 3 | 44-370 | 153535 | Spindle Pulley, SpLined, OD: 5" |
| 4 | 02-304 | 173984 | Self Tapping Bolt, 5/16-18" x 1-1/4" |
| | 02-301 | 17490612 | Self Tapping Bolt, 3/8-16" x 1" |
| 5 | 82-220 | 128774 | Spindle Housing |
| | 82-024 | | Spindle Housing, Heavy-Duty Version of 82-220 |
| 6 | 85-017 | 137646 | Spindle Shaft with Bearings |
| | 45-257 | | Top Bearing (Not Shown) |
| | 45-259 | | Lower Bearing (Not Shown) |
| | 04-001 | | Spindle Pulley Nut (Not Shown) |
| 7 | 72-312 | 165746 | Gauge Wheel, 5" x 2" |
| 8 | 72-313 | 176066 | Roller 7" x 3" |
| 9 | 82-225 | 130794 | Spindle Assembly |
| | 82-014 | | Spindle Assembly, Heavy-Duty Version of 82-225 |
| 10 | 75-936 | 131290 | Deck Belt, 38" Cut, 1/2" x 88-1/4" |
| | 75-099 | 144200 | Deck Belt, 38" & 42" Cut, 1/2" x 88-3/8" |
| | 75-106 | 130969 | Deck Belt, 42" Cut (1992–1999), 1/2" x 92-1/4" |
| | 75-197 | 144959 | Deck Belt, 42" Cut, 1/2" x 95-3/8" |
| | 75-913 | 174883 | Deck Belt, 42" Cut (2002 & Newer), 5/8" x 97-3/16" |
| 10B | 75-097 | 131264 | Deck Belt, 36" Cut (1992–1999), 1/2" x 78-3/8" |
| | 75-107 | 106085X | Deck Belt, 38" Cut with Electric PTO, 1/2" x 79" |

## AYP 44", 46", 48", 50", & 54" Decks (3 Blades)

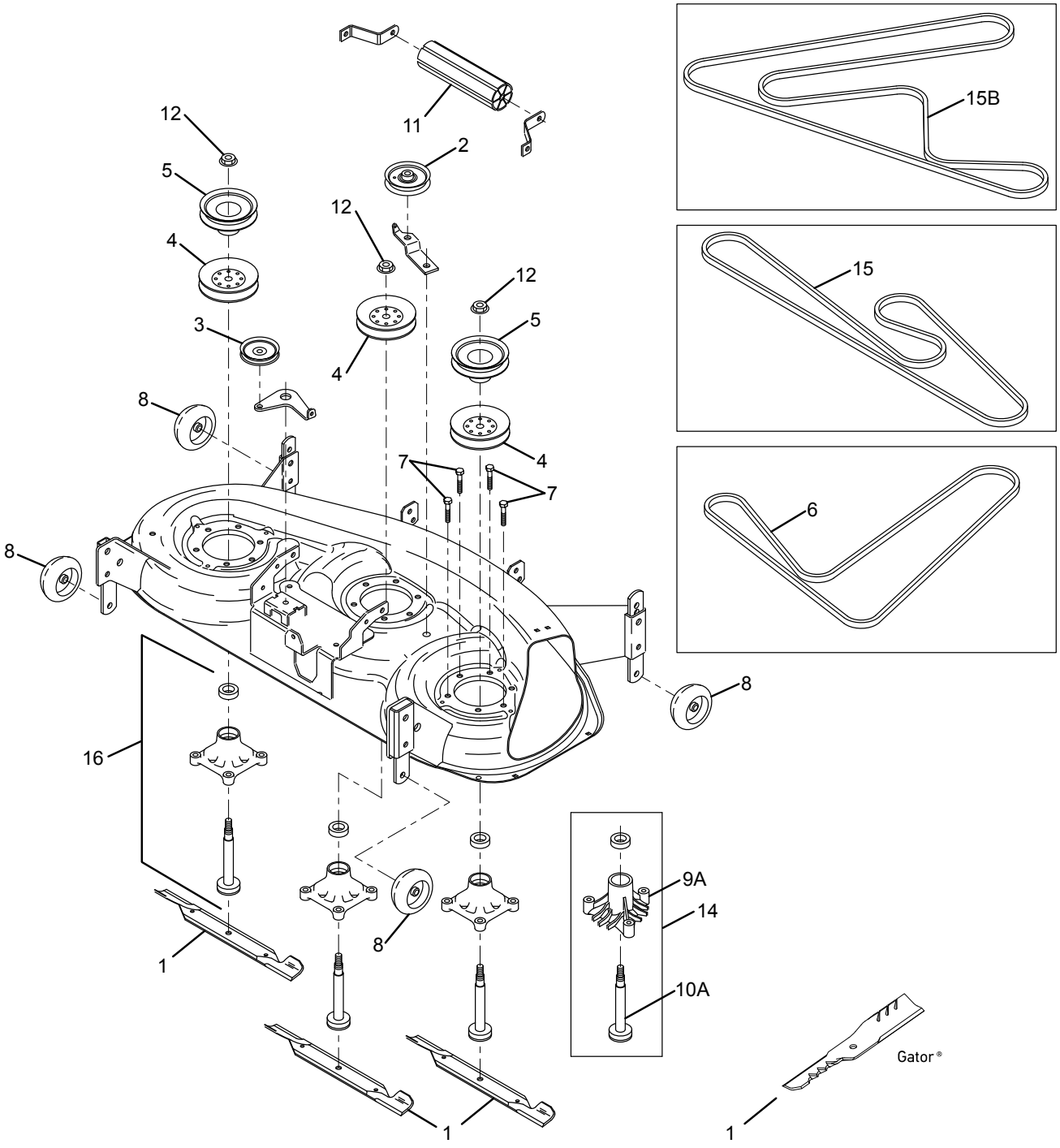

## AYP 44", 46", 48", 50", & 54" Decks (3 Blades)

| № | Part No. | OEM № | Description |
|---|---|---|---|
| **Blades for 38" Cut Decks with 3/8" Round Center Hole** | | | |
| 1 | 95-014 | 106635X | Standard, 15-11/32" |
| | 95-607 | | Gator® G3™ |
| **Blades for 44" Decks with 5 pt. Star Center Hole** | | | |
| 1 | 95-006 | 130652 | Standard, 15-3/8" |
| | 95-049 | 130652 | Heavy-Duty Version of 95-006 |
| **Blades for 46" Decks with 5 pt. Star Center Hole** | | | |
| 1 | 95-045 | 152433 | Mulching, 15-1/2" |
| | 95-052 | 157033 | High-Lift Mulching, 15-1/2" |
| | 95-614 | | Gator G3, 15-1/2" |
| | 595-614 | | Gator G5™, 15-1/2" |
| **Blades for 48" Decks with 5 pt. Star Center Hole** | | | |
| 1 | 195-062 | 180054 | 100-Series, 16-5/8" |
| | 96-615 | | Gator G3, 16-5/8" |
| | 596-615 | | Gator G5, 16-5/8" |
| **Blades for 50" Decks with 5 pt. Star Center Hole** | | | |
| 1 | 95-018 | 137380 | High-Lift, 17-3/8" |
| | 95-050 | | Heavy-Duty Version of 95-018 |
| | 95-609 | | Gator G3, 17-3/8" |
| | 595-609 | | Gator G5, 17-3/8" |
| **Blades for 54" Decks with 5pt. Star Center Hole** | | | |
| 1 | 195-072 | 187254 | 100-Series, 18-1/2" |
| | 95-082 | 187255 | Mulching, 18-1/2" |
| | 95-605 | | Gator G3, 18-1/2" |
| | 595-605 | | Gator G5, 18-1/2" |
| **Replacement Parts** | | | |
| 2 | 78-051 | 177284 | Flat Idler Pulley, OD: 5-1/2", FOD: 4-3/4", W: 1-9/16", FW: 1-3/16", ID: 3/8" |
| | 78-052 | 175820 | Flat Idler Pulley, OD: 4-1/2", FOD: 3-5/8", W: 1", FW: 5/8", ID: 3/8" |
| | 78-053 | 173901 | Flat Idler Pulley, OD: 4-5/16", FOD: 3-1/2", W: 1 -3/8", FW: 1", ID: 3/8" |
| | 78-054 | 173437 | Flat Idler Pulley, OD: 3-3/4", FOD: 2-7/8", W: 1-3/8", FW: 3/4", ID: 3/8" |
| | 34-046 | 173438 | Flat Idler Pulley, OD: 3-7/8", FOD: 3-1/16", W: 1", FW: 3/4", ID: 3/8" |
| | 78-043 | 105313X | Flat Idler Pulley, OD: 4-1/4", FOD: 3-3/4", W: 1-5/16", FW: 7/8", ID: 3/8" |
| | 78-013 | 177968 | Flat Idler Pulley, OD: 4", FOD: 3-1/16", W: 1", FW: 3/4", ID: 3/8" |
| 3 | 78-014 | 189993 | V-Idler Pulley, OD: 4-1/2", W: 13/16", ID: 3/8" |
| | 34-049 | 139245 | V-Idler Pulley, OD: 3-1/2", W: 13/16", ID: 3/8" |
| 4 | 44-370 | 153535 | Spindle Pulley, Splined, OD: 5" |
| 5 | 44-302 | 136572 | Driven Pulley, OD: 5" |
| 6 | 75-169 | 139573 | Deck Drive Belt, 46" & 50" Decks, 1/2" x 83-3/4" |
| | 75-170 | 148763 | Deck Drive Belt, 46" & 50" Decks, 1/2" x 85-7/8" |
| | 75-097 | 131264 | Deck Drive Belt, 44" (1992-1999), 1/2" x 78-3/8" |
| 7 | 02-304 | 173984 | Self Tapping Bolt, 5/16-18 x 1-1/4" |
| | 02-301 | 17490612 | Self Tapping Bolt, 3/8-16 x 1" |
| 8 | 72-312 | 165746 | Gauge Wheel, 5" x 2" |
| 9A | 82-221 | 137152 | Housing Only, for Oregon® 82-510 |
| 10A | 85-023 | 137553 | Spindle Shaft with Bearings for Oregon 82-510 |
| 11 | 72-313 | 176066 | Roller, 7" x 3" |
| 12 | 04-001 | 129729 | Spindle Nut for Pulley |
| 14 | 82-510 | 143651 | Spindle Assembly, 44" & 50" Decks for Blades with Star Hole |
| 15 | 75-197 | 144959 | Deck Belt, 46" & 50" Decks, 1/2" x 95-3/8" |
| | 75-654 | 180808 | Deck Belt, 48" Cut, 5/8" x 88-3/4" |
| | 75-167 | 138255 | Deck Belt, 50" Cut, 1/2" x 95-1/4" |
| | 75-936 | 131290 | Deck Belt, 44" Cut, 1/2" x 88-1/4" |
| 15B | 75-810 | 191273 | Deck/Spindle Belt, 54" Decks, 5/8" x 142-1/2" |
| 16 | 82-012 | 174356 | Spindle Assembly, 48" Decks (After 2001) |
| | 82-029 | 187292 | Spindle Assembly, 54" Decks |

## Cub Cadet LT1000, SLT1500, GT1500, ZTR, & Z-Force — 42" Decks LTX1045 & LTX1046, 46" Decks (2 Blades)

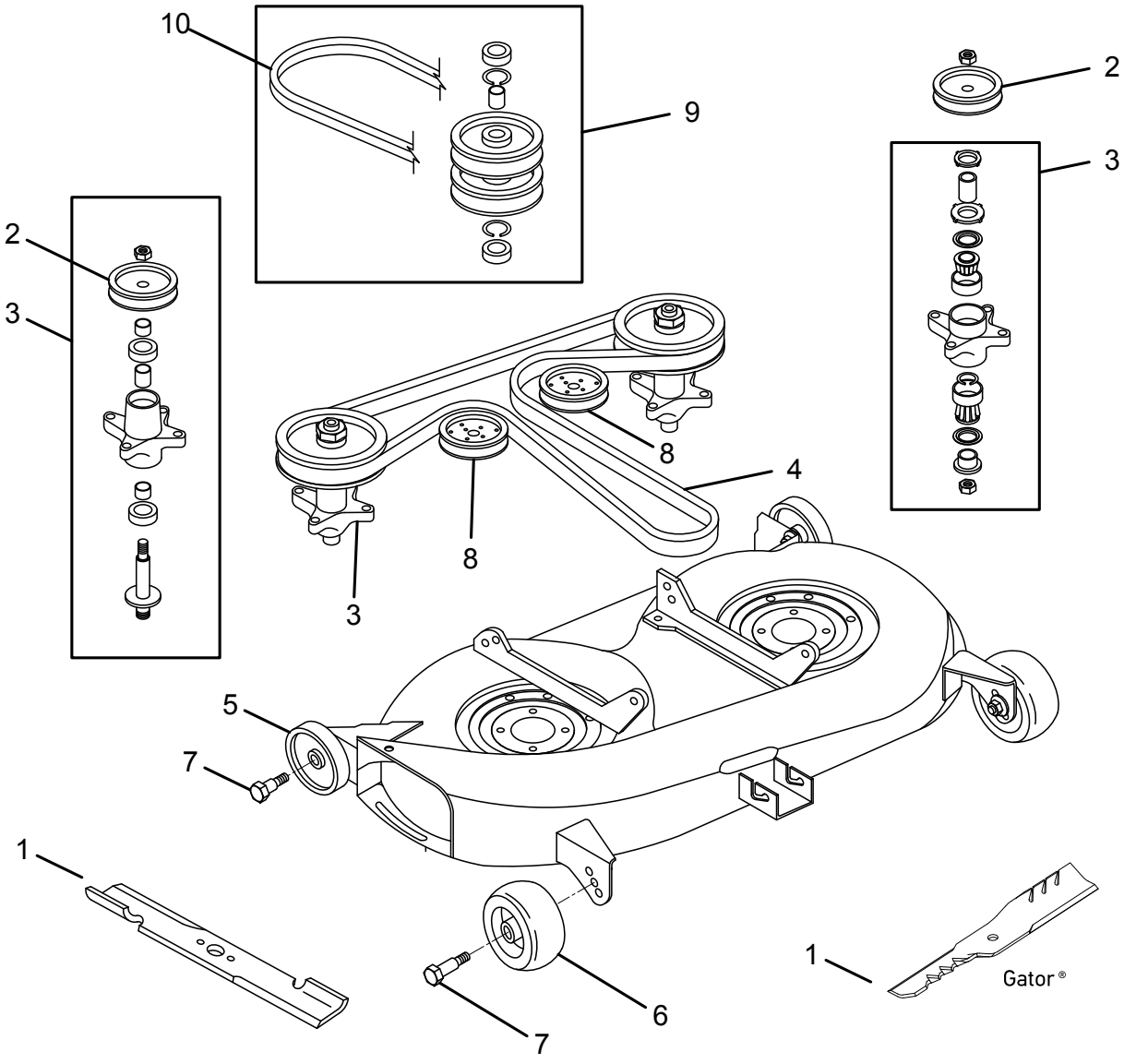

## Cub Cadet LT1000, SLT1500, GT1500, ZTR, & Z-Force — 42" Decks LTX1045 & LTX1046, 46" Decks (2 Blades)

| № | Part No. | OEM No. | Description |
|---|---|---|---|
| **Blades for 42" Decks Used on LT1042 with 3/4" Round Center Hole** | | | |
| 1 | 91-058 | 742-3033 | Mulching, 21-1/8" |
| | 91-635 | | Gator® G3™, 21-1/8" |
| | 591-635 | | Gator G5™, 21-1/8" |
| **Blades for 42" Decks Used on 2150 & 2155 with 3/4" Round Center Hole** | | | |
| 1 | 91-332 | 742-04101 | Low-Lift, 21-1/4" |
| | 96-350 | | Gator G3, 21-1/4" |
| **Blades for 42" Decks Used on LT1040, LT1042, & RZT42 with 6 pt. Star Center Hole** | | | |
| 1 | 98-090 | 742-04126 | Mulching, 21-1/8" |
| **Blades for 46" Decks Used on LXT1045, LT1046, & LXT1046VT with 6 pt. Star Center Hole** | | | |
| 1 | 98-096 | 942-04244 | High-Lift, 23-1/4" |
| | 96-401 | | Gator G3, 23-1/4" |
| **Replacement Parts** | | | |
| 2 | | 756-3106 | Spindle Pulley, LT1018, Z-FORCE 42 with Star Blade Hole |
| | | 756-1227 | Spindle Pulley, LT1042 with Star Blade Hole |
| | | 756-04086 | Spindle Pulley, LT1042 with Round Blade Hole |
| | | 756-1188 | Spindle Pulley, RZT42 with Star Blade Hole |
| 3 | 82-411 | 618-3129C | Spindle Assembly, LT1018, Z-FORCE 42 with Star Blade Hole |
| | 82-408 | 618-0659 | Spindle Assembly, LT1042 with Star Blade Hole |
| | 82-407 | 618-04461 | Spindle Assembly, LT1042 with Star Blade Hole (Late Production) |
| | 82-402 | 618-04124A | Spindle Assembly, LT1042 with Round Blade Hole |
| | 82-405 | 618-0427 | Spindle Assembly, RZT42 with Star Blade Hole |
| 4 | 75-677 | 754-0498 | Deck Drive Belt, LT1018, 1/2" x 67-1/4" |
| | 75-813 | 754-04060B | Deck Drive Belt, LT1042, 1/2" x 96-5/8" |
| | 75-714 | 754-04045 | Deck Drive Belt, LT1042 RZT 42, 1/2" x 109-1/4" |
| | | 1009907 | Deck Drive Belt, Z-Force 42 |
| 5 | 72-015 | 734-04039 | Gauge Wheel |
| | 72-025 | 734-04155 | Gauge Wheel |
| 6 | 72-318 | 734-0973 | Gauge Wheel, 4-3/4" x 1-3/8", ID: 1/2", Offset Hub: 1-3/8" |
| 7 | 04-150 | 738-0373 | Gauge Wheel Bolt |
| 8 | 34-041 | 756-0627B | Flat Idler, 3.5" |
| | 78-046 | 756-1229 | Flat Idler, 4" |
| | 34-205 | 756-0542 | Flat Idler |
| 9 | 44-103 | 756-1202 | Double Pulley with Bearings, fits PTO LT1018 |
| | | 1009904 | Double Pulley with Bearings, fits PTO Z-Force 42 |
| 10 | 75-676 | 754-0497 | PTO Drive Belt, fits LT1018, 1/2" x 60-3/8" |

## Cub Cadet LT1000, SLT1500, GT1500, RZT, & Z-Force — 44", 46", & 48" with 3 Blades

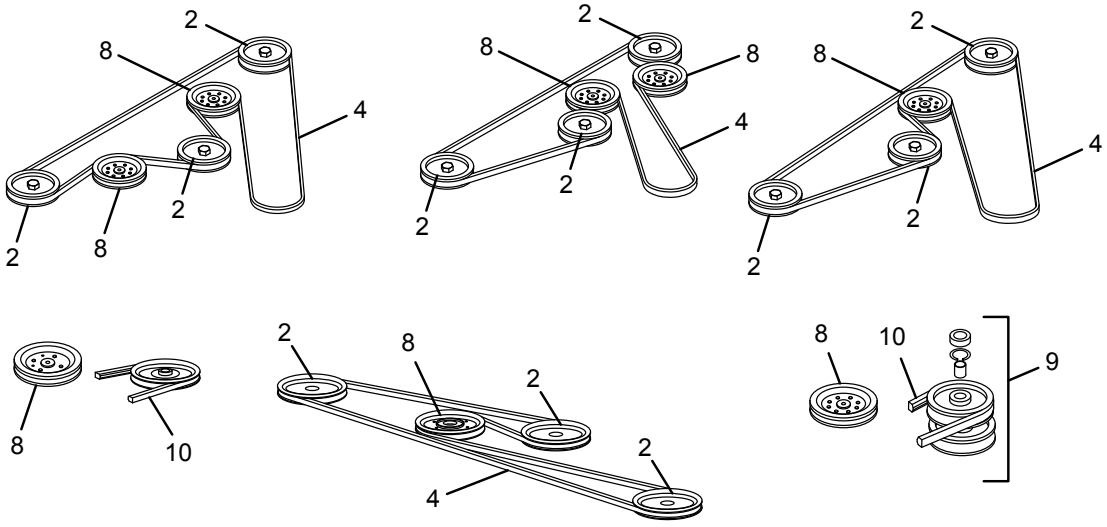


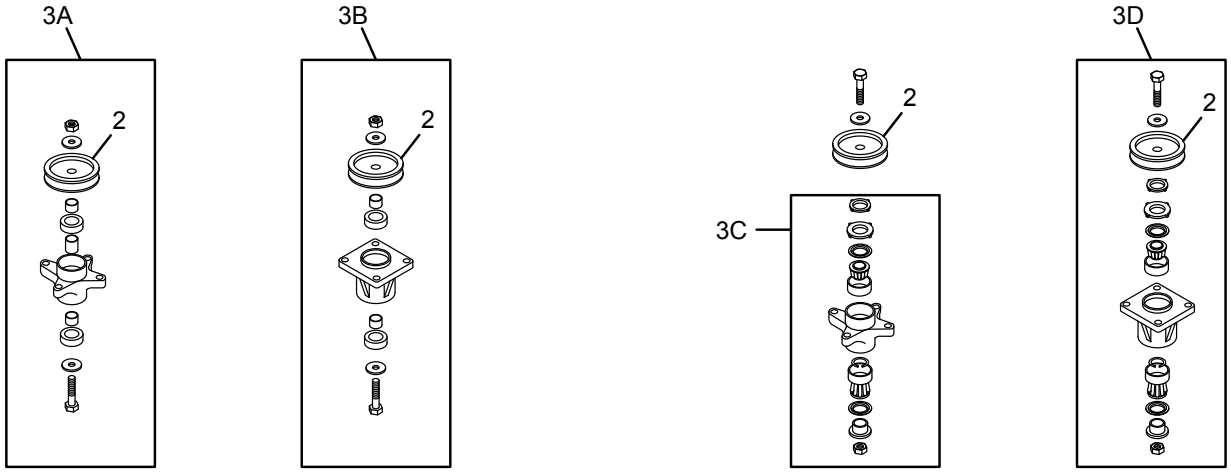


For Blades with Star Center Hole

For Blades with Round Center Hole

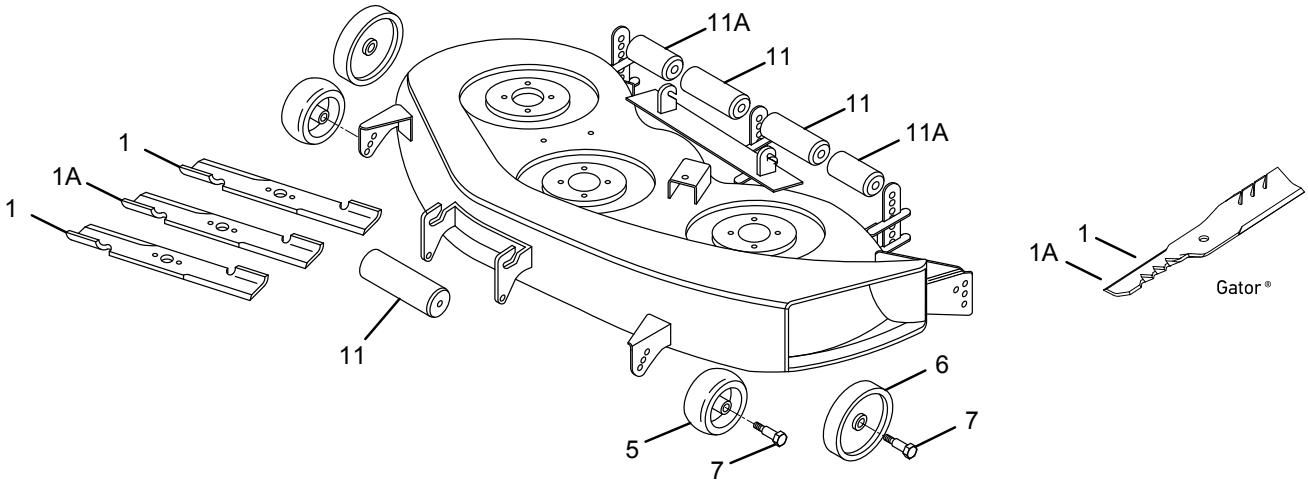

## Cub Cadet LT1000, SLT1500, GT1500, RZT, & Z-Force — 44", 46", & 48" with 3 Blades

| № | Part No. | OEM No. | Description |
|---|---|---|---|
| **Blades for 44" Decks Used on Z-FORCE with 3/4" Round Center Hole** | | | |
| 1 | 98-080 | 1008616 | High-Lift, 15-15/16" |
| **Blades for 46" Decks Used on LT1046 & i1046 with 6 pt. Star Center Hole** | | | |
| 1 | 98-085 | 742-04125 | Mulching (L & R Blade), 16-1/4" |
| 1A | 98-084 | 742-04124 | Mulching (Center Blade), 14-7/8" |
| **Blades for 46" Decks Used on Garden Tractors with 3/4" Round Center Hole** | | | |
| 1 | 91-330 | 742-04125 | Bagging (L & R Blade), 16-1/4" |
| | 98-082 | 742-04125 | Mulching (L & R Blade), 16-1/4" |
| 1A | 91-327 | 742-04124 | Bagging (Center Blade), 14-7/8" |
| | 98-083 | 742-04124 | Mulching (Center Blade), 14-7/8" |
| **Blades for 48" Decks Used on Z-FORCE with 3/4" Round Center Hole** | | | |
| 1 | 98-081 | 1004772 | High-Lift, 16-1/2" |
| | 96-381 | | Gator G3, 16-1/2" |
| **Blades for 48" Decks Used on Lawn Tractors with 3/4" Round Center Hole** | | | |
| 1 | 91-333 | 742-3019 | Low-Lift, 16-1/2" |
| | 91-056 | 742-3025 | High-Lift, 16-1/2" |
| | 90-697 | | Gator G3, 16-1/2" |
| | 596-330 | | Gator G5, 16-1/2" |
| **Replacement Parts** | | | |
| 3C | 82-406 | 618-04394 | Spindle Assembly, Z-Force, 44" Cut, Kohler Engine 50" & 60" (Round Blade Hole, Pulley & Shaft Not Included) |
| | 82-411 | 618-3129B | Spindle Assembly, Z-Force, 44" Cut, Briggs Engine (Round Blade Hole, Pulley & Shaft Not Included) |
| 3B | 82-409 | 618-0660 | Spindle Assembly, LT1000, 46" Cut with Star Blade Hole (Pulley & Shaft Included) |
| 3D | 82-401 | 618-04123B | Spindle Assembly, LT1000, 46" Cut with Round Blade Hole (Pulley & Shaft Included) |
| | | 1006470 | Spindle Assembly, Z-FORCE, 48" with Round Blade Hole (Pulley & Shaft Included) |
| 4 | 75-811 | 2000103 | Deck Drive Belt, Z-Force, 44" Cut with Kohler Engine, 1/2" x 81-1/2" |
| | 75-403 | 754-3039 | Deck Drive Belt, Z-Force, 44" Cut with Briggs Engine (Round Blade Center Hole), 1/2" x 103" |
| | 75-706 | 754-04033 | Deck Drive Belt, LT1022, 1045, & 1046, 46" Cut, 1/2" x 118-5/16" |
| | 75-815 | 754-04118 | Deck Drive Belt, LT1045 & 1046, 46" Cut, 1/2" x 122-1/2" |
| | 75-816 | 754-04153 | Deck Drive Belt, LT1045 & 1046, 46" Cut, 1/2" x 122-1/8" |
| | 75-808 | 1000399 | Deck Drive Belt, Z-Force, 48" Cut, 1/2" x 107-1/8" |
| 5 | 72-025 | 734-04155 | Gauge Wheel |
| | 72-027 | 703-1890 | Gauge Wheel |
| | 72-015 | 734-04039 | Gauge Wheel |
| 6 | 72-318 | 734-0973 | Gauge Wheel |
| 7 | 04-150 | 738-0373 | Gauge Wheel Bolt |
| | 04-163 | 738-3056 | Gauge Wheel Bolt |
| 8 | 78-046 | 756-1229 | Flat Idler |
| | 34-041 | 756-0627B | Flat Idler |
| | 34-201 | 1004101 | Flat Idler |
| | 34-206 | 756-3062 | Flat Idler |
| 10 | 75-818 | 1002391 | PTO Drive Belt, Z-Force 44 |
| | 75-820 | 50441 | PTO Drive Belt, Z-Force 44, 48" |
| 11 | | 731-0335 | Deck Roller |
| | 72-319 | 1000385 | Deck Roller |
| | 72-319 | 731-3005 | Deck Roller |
| 11A | | 1001169 | Rear Deck Roller, Short |

## Cub Cadet LT1000, SLT1500, GT1500, RZT, & Z-Force — 50", 54", & 60" with 3 Blades

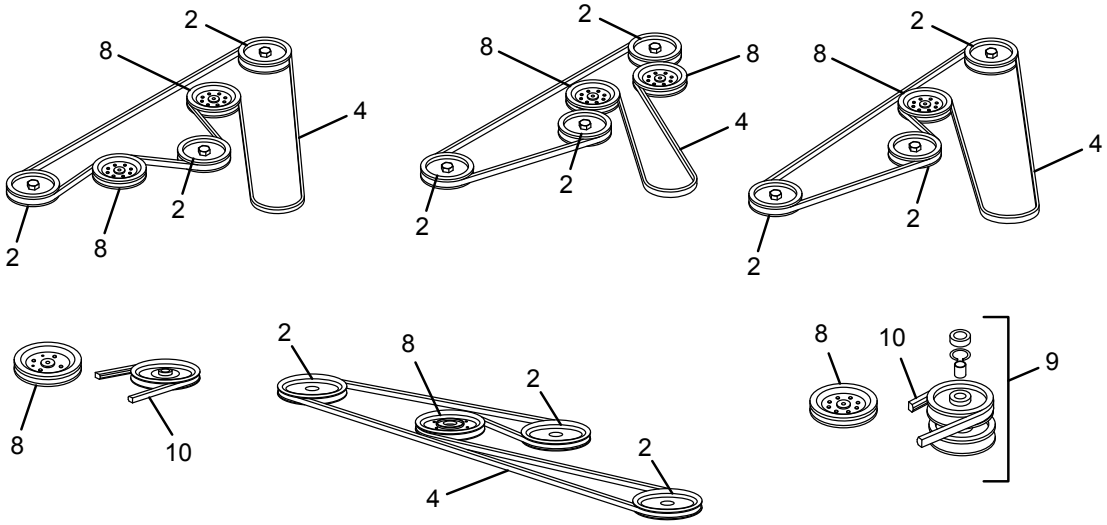


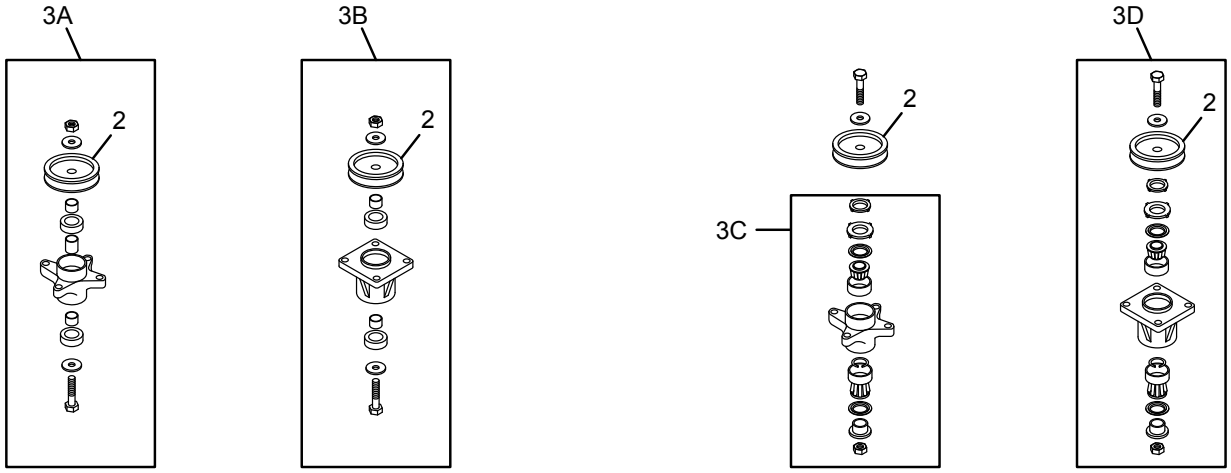


For Blades with Star Center Hole

For Blades with Round Center Hole

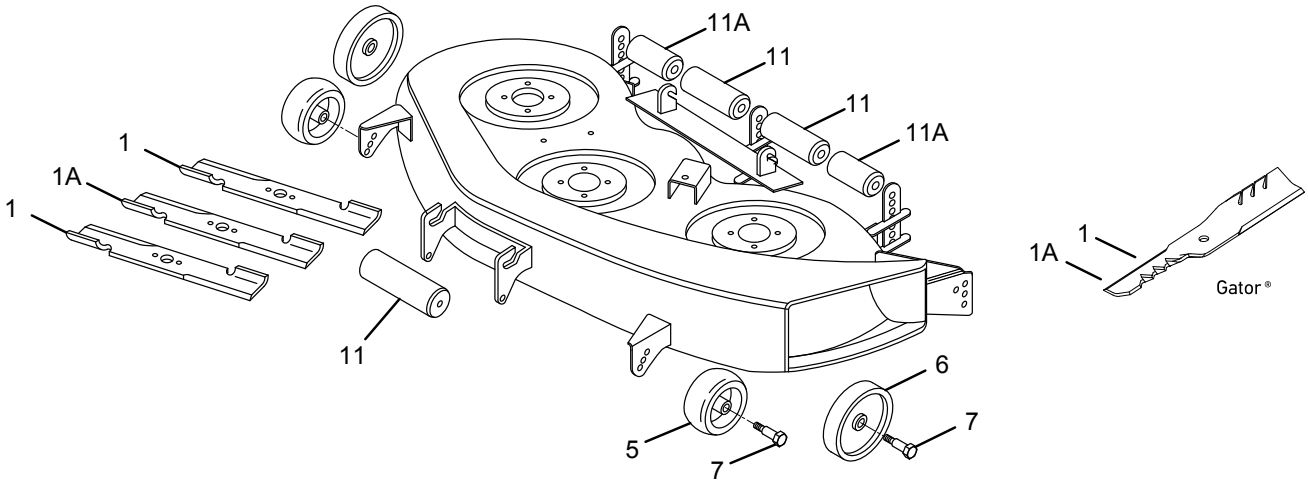

## Cub Cadet LT1000, SLT1500, GT1500, RZT, & Z-Force — 50", 54", & 60" with 3 Blades

| № | Part No. | OEM No. | Description |
|---|---|---|---|
| **Blades for 50" Decks Used on LT1024 & LT1050 with 3/4" Round Center Hole** | | | |
| | 98-087 | 742-04047 | Standard, 17-7/8" |
| 1 | 96-387 | | Gator® G3™, 17-7/8" |
| | 596-387 | | Gator G5™, 17-7/8" |
| **Blades for 50" Z Force Decks Used on LT1050 with 6 pt. Star Center Hole** | | | |
| | 198-086 | 742-04053B | 100-Series, 17-7/8" |
| 1 | 91-938 | 742-04053B | Gator G3, 17-7/8" |
| | 591-938 | 742-04053B | Gator G5, 17-7/8" |
| **Blades for 50" Z Force Decks Used on M-50-KHS with 3/4" Round Center Hole** | | | |
| 1 | 92-015 | 1010168 | Standard, 17-7/8" |
| | 592-015 | | Gator G5, 17-7/8" |
| **Blades for 54" Decks Used on SLT1554 & GT1554 with 6 pt. Star Center Hole** | | | |
| | 98-072 | 742-0677 | High-Lift, 18-1/2" |
| 1 | 98-672 | | Gator G3, 18-1/2" |
| | 598-672 | | Gator G5, 18-1/2" |
| | 398-672 | | Gator G6, 18-1/2" |
| **Blades for 54" Decks Used on Garden Tractors with 3/4" Round Center Hole** | | | |
| | 91-440 | 742-3013 | High-Lift, 18-1/2" |
| 1 | 96-333 | | Gator G3, 18-1/2" |
| | 596-333 | | Gator G5, 18-1/2" |
| **Blades for 54" Decks Used on M54 Tank with 3/4" Round Center Hole** | | | |
| | 98-091 | 2005018 | High-Lift, 19" |
| 1 | 96-351 | | Gator G3, 19" |
| | 596-351 | | Gator G5, 19" |
| **Blades for 60" Decks Used on Z-Force 60 with 3/4" Round Center Hole** | | | |
| 1 | 91-144 | 1004719 | High-Lift, 20-1/2" |
| | 96-677 | | Gator G3, 20-1/2" |
| **Blades for 60" Decks Used on Tank & RECON with 3/4" Round Center Hole** | | | |
| | 98-071 | 2005019 | High-Lift, 21" |
| 1 | 96-300 | | Gator G3, 21" |
| | 596-300 | | Gator G5, 21" |
| **Replacement Parts** | | | |
| 3C | 82-406 | 618-04394 | Spindle Assembly, Z-Force, Kohler Engine 50" & 60" (Round Blade Hole, Pulley & Shaft Not Included) |
| 3A | 82-403 | 618-04126 | Spindle Assembly, LT1050, SLT1550, & RZT 50" (Star Blade Hole, Pulley & Shaft Included) |
| | 82-403 | 618-04126 | Spindle Assembly, SLT1554, 54" Cut (Star Blade Hole, Pulley & Shaft Included) |
| 3C | 82-412 | 618-04129 | Spindle Assembly, LT1000, 50" Cut with Round Blade Hole (Pulley & Shaft Included) |
| 3A | 82-519 | 618-0671 | Spindle Assembly, GT1554, 54" Cut (Star Blade Hole, Pulley & Shaft Included) |
| | 75-716 | 754-04048 | Deck Drive Belt, LT1024, 50" Cut, 5/8" x 131-5/16" |
| | 75-814 | 754-04077 | Deck Drive Belt, LT1050 & SLT1550, 50" Cut, 5/8" x 133-13/16" |
| 4 | 75-710 | 754-04044 | Deck Drive Belt, RZT, 50" Cut, 1/2" x 134" |
| | 75-491 | 2000653 | Deck Drive Belt, Z-Force, 50" Cut, 1/2" x 91" |
| | 75-994 | 754-04083 | Deck Drive Belt, SLT1554, 54" Cut, 5/8" x 138-3/16" |
| | 75-994 | 754-0642 | Deck Drive Belt, GT1554, 54" Cut, 5/8" x 138-3/16" |
| | 72-025 | 734-04155 | Gauge Wheel |
| 5 | 72-027 | 703-1890 | Gauge Wheel |
| | 72-015 | 734-04039 | Gauge Wheel |
| 6 | 72-318 | 734-0973 | Gauge Wheel |
| 7 | 04-150 | 738-0373 | Gauge Wheel Bolt |
| | 04-163 | 738-3056 | Gauge Wheel Bolt |
| | 78-046 | 756-1229 | Flat Idler |
| 8 | 34-041 | 756-0627B | Flat Idler |
| | 34-201 | 1004101 | Flat Idler |
| | 34-206 | 756-3062 | Flat Idler |
| 10 | 75-821 | 1005011 | PTO Drive Belt, Z-Force 50 |
| | 75-822 | 1005012 | PTO Drive Belt, Z-Force 60 |
| | | 731-0335 | Deck Roller |
| 11 | 72-319 | 1000385 | Deck Roller |
| | 72-319 | 731-3005 | Deck Roller |
| 11A | | 1001169 | Rear Deck Roller, Short |

## Cub Cadet LT1000, SLT1500, GT1500, ZTR, & Z-Force

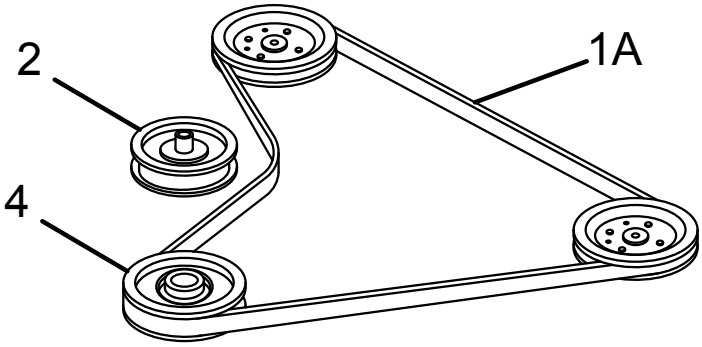


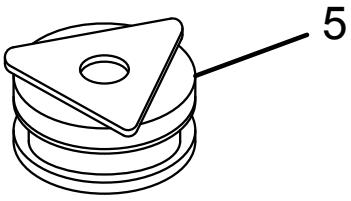


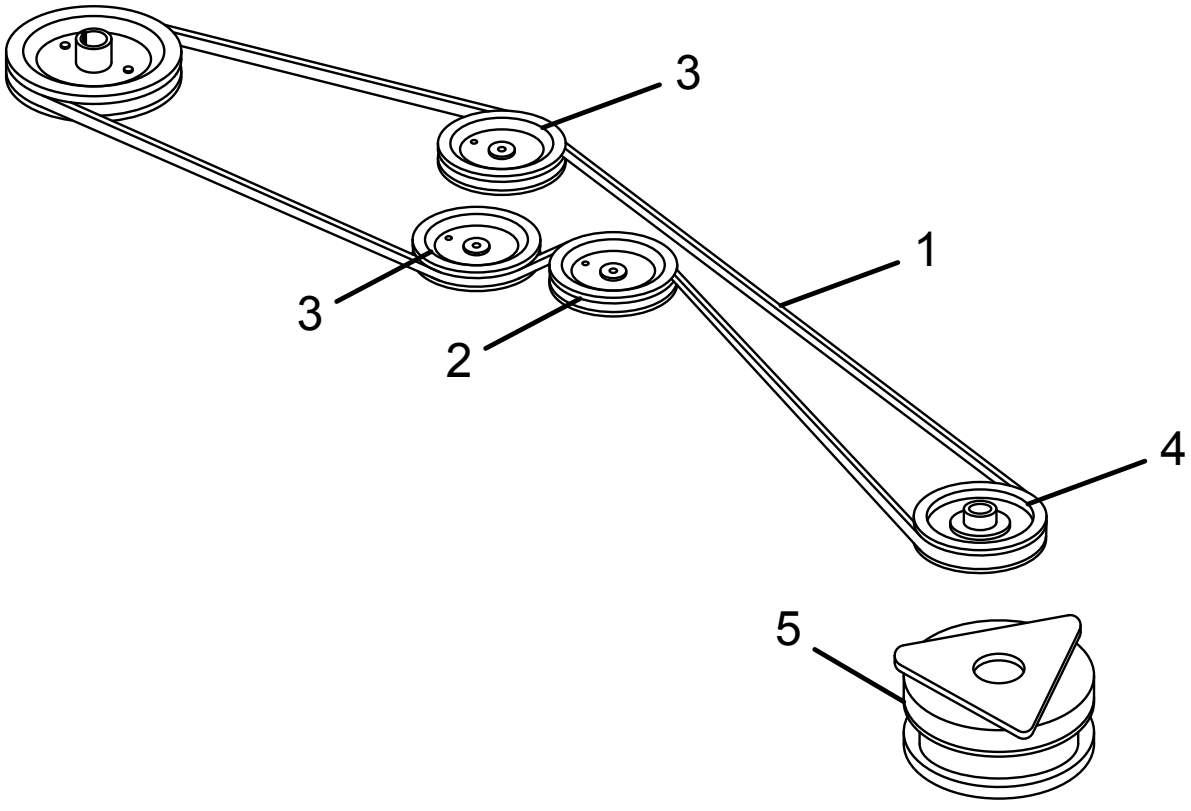

## Cub Cadet LT1000, SLT1500, GT1500, ZTR, & Z-Force

| № | Part No. | OEM No. | Description |
|---|---|---|---|
| 1 | 75-823 | 754-0640 | Drive Belt – Traction, fits LT1018 & LT1022, 1/2" x 79-3/8" |
| | 75-824 | 754-0461 | Drive Belt – Traction, fits LT1042, 1045, 1046, 1050, SLT1550, & 1554, 1/2" x 78-1/8" |
| | 75-021 | 754-0349 | Drive Belt – Traction, fits GT1554, 1/2" x 79-5/16" |
| 1A | 75-886 | 754-04043 | Drive Belt – Traction, for RZT Series, 1/2" x 58-1/8" |
| | 75-798 | 1008349 | Drive Belt – Traction, for Z-Force Series, 1/2" x 56-3/8" |
| 2 | 78-028 | 756-0981A | Flat Idler, 2-3/4" X |
| | 34-029 | 30782 | Flat Idler |
| | 78-028 | 756-04224 | Flat Idler, 2-3/4" X |
| | 34-041 | 756-0627 | Flat Idler, 3-1/2" X |
| 3 | 34-030 | 756-0116 | V-Idler, 3" |
| | 34-030 | 756-04209 | V-Idler, 3" |
| 4 | | 756-0978A | Engine Pulley, fits LT1000, SLT1500, GT1500, & RZT (with 3-1/2" Pulley) |
| | | 756-04102A | Engine Pulley, fits LT1000, SLT1500, GT1500, & RZT (with 4" Pulley) |
| | | 1008808 | Engine Pulley, for Z-Force |
| 5 | 33-125-1 | 717-1708 | PTO Clutch, fits LT1018 |
| | 33-133 | 717-04163 | PTO Clutch, fits LT1042 |
| | | 717-04183 | PTO Clutch, fits RZT42, RZT50, & Z-Force 60 (Ogura) |
| | | 717-04127 | PTO Clutch, fits RZT17 & RZT22 (Ogura) |
| | 33-134 | 717-04174 | PTO Clutch, fits LT1045, LT1050, & SLT1550 |
| | 33-139 | 717-04080 | PTO Clutch, fits LT1022, LT1024, & LT1046 |
| | 33-104 | 717-1774B | PTO Clutch, fits SLT1554 & GT1554 |
| | | 2002160 | PTO Clutch, for Z-Force 60 (with Kawasaki Engine) (Ogura) |
| | | 1008434 | PTO, for Z-Force (Ogura) |
| | | 1008544 | PTO, for Z-Force (Ogura) |

## Cub Cadet LT1000, SL1500, GT1500, ZTR, & Z-Force

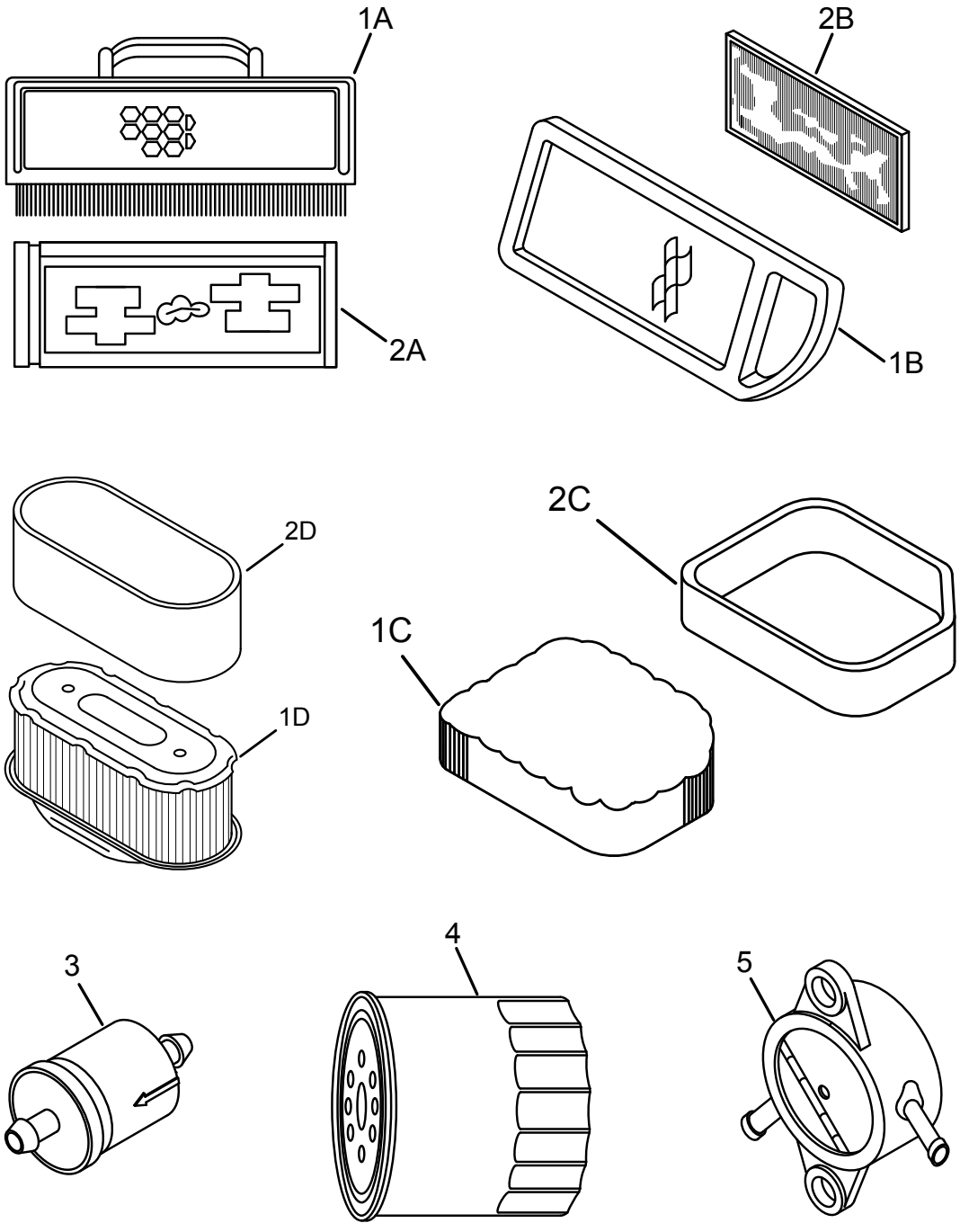

## Cub Cadet LT1000, SLT1500, GT1500, ZTR, & Z-Force

| № | | OEM № | Description |
|---|---|---|---|
| 1A | 30-032 | 499486 | Air Filter (Non-Washable), for Briggs & Stratton Twin Cylinder |
| | 30-136 | 698754 | Air Filter (Washable), for Briggs & Stratton Twin Cylinder |
| 1B | 30-074 | 698083 | Air Filter (Non-Washable), for Briggs & Stratton Single Cylinder |
| | 30-122 | 697153 | Air Filter (Washable), for Briggs & Stratton Single Cylinder |
| 1C | 30-130 | 32-083-03S | Air Filter, for Kohler Courage Twin Cylinder |
| 1D | 30-163 | 11013-7027 | Air Filter, for Kawasaki (Internally Vented Carburetors) |
| | 30-054 | 11013-7024 | Air Filter, for Kawasaki (Externally Vented Carburetors) |
| 2A | 30-914 | 273638 | Pre Filter, for Briggs & Stratton Twin Cylinder (Use with Oregon® 30-032 & 30-9xx) |
| 2B | 30-076 | 697015 | Pre Filter, for Briggs & Stratton Single Cylinder (Use with Oregon 30-074 & 30-9xx) |
| 2C | 30-159 | 32-083-06S | Pre Filter, for Kohler Courage Twin Cylinder (Use with Oregon 30-130) |
| 2D | 30-527 | 11013-7009 | Pre Filter, for Kawasaki (for 30-054) |
| 3 | 07-064 | 695666 | Fuel Filter, for Briggs & Stratton 30 Micron |
| | 07-107 | 691035 | Fuel Filter, for Briggs & Stratton, 80 Micron |
| | 07-332 | 25-050-22S | Fuel Filter, for Kohler – 51 Micron |
| | 07-063 | 49019-7001 | Fuel Filter, for Kawasaki |
| 4 | 83-013 | 492932 | Oil Filter, for Briggs & Stratton |
| | 83-280 | 696854 | Oil Filter, for Briggs & Stratton (Yellow Extended Life Version of Oregon 83-013) |
| | 83-283 | 52-050-02S | Oil Filter, for Kohler |
| | 83-284 | 12-050-01S | Oil Filter, for Kohler (Short Version of Oregon 83-283) |
| | 83-282 | 49065-2078 | Oil Filter, for Kawasaki |
| 5 | 07-700 | 808656 | Fuel Pump, for Briggs & Stratton (without Bracket) |
| | | 697090 | Fuel Pump, for Briggs & Stratton (with Bracket) |
| | 07-700 | 24-393-16 | Fuel Pump, for Kohler |
| | 07-700 | 49040-7001 | Fuel Pump, for Kawasaki |

## Cub Cadet LT1000, SLT1500, GT1500, ZTR, & Z-Force

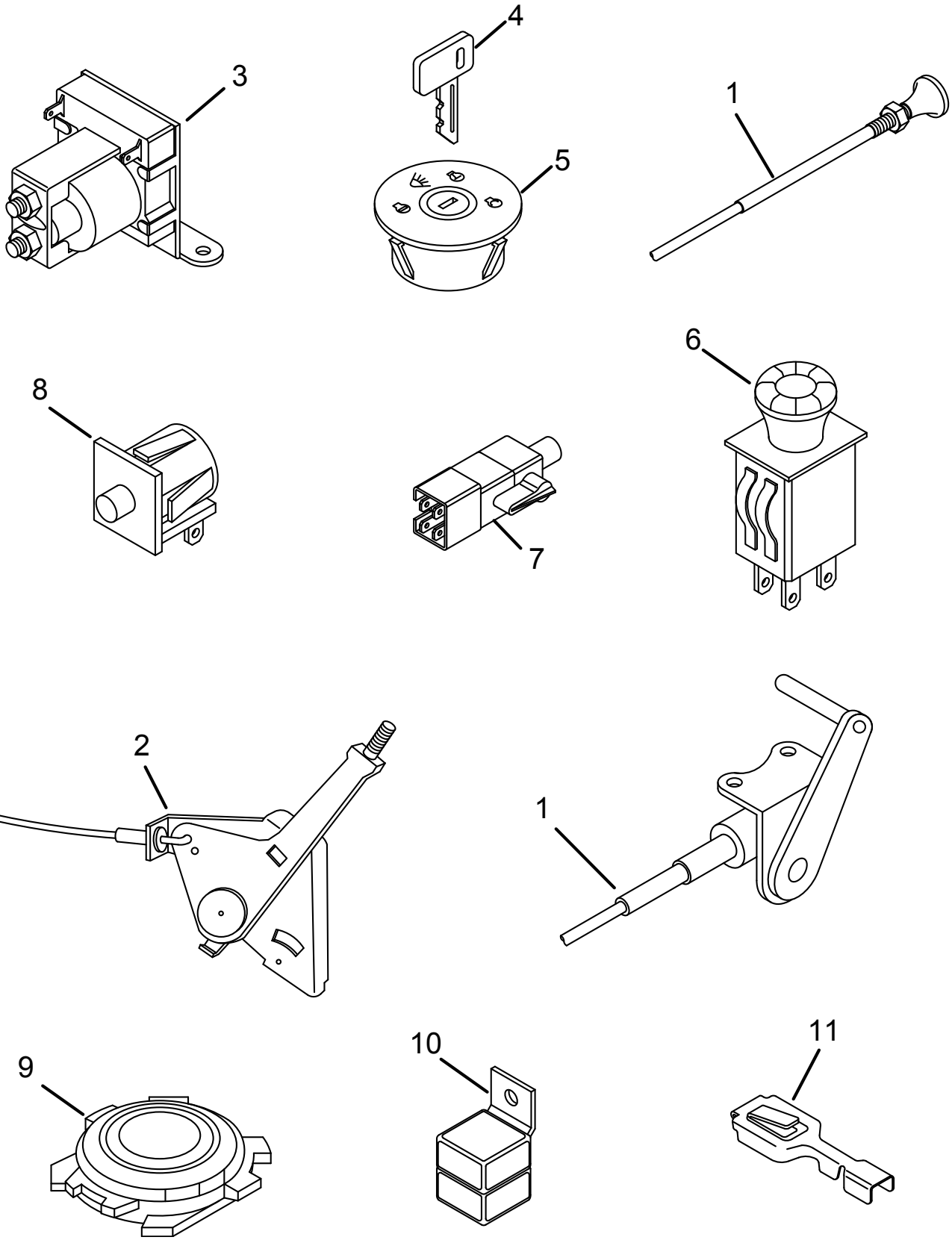

## Cub Cadet LT1000, SLT1500, GT1500, ZTR, & Z-Force

| № | | OEM № | Description |
|---|---|---|---|
| | 60-056 | 02000478 | Choke Cable, for Z-Force with Kohler Engine (Except Z-Force 60) |
| | 60-057 | 01004020 | Choke Cable, for Z-Force with Briggs Engine |
| 1 | 60-059 | 746-04120 | Choke Cable, fits LT1000 Series, SLT1500 Series, & GT1500 (Except with Courage Engine) |
| | 60-039 | 746-1085A | Choke Cable, fits LT1000 Series with Courage Twin Cylinder Engine |
| | 60-062 | 746-04143 | Choke Cable, fits RZT 22 |
| 2 | 60-042 | 746-1100 | Throttle Cable, fits LT1000 Series with Courage Twin Cylinder Engine, SLT, & GT1500 |
| 3 | 33-335 | 725-1426 | SoleNoid (Except for Z-Force) |
| | | 01002228 | SoleNoid, for Z-Force (Not Mounted on Starter) |
| | 33-099 | 725-2054 | Ignition Key, Plastic Delta Switches |
| 4 | 33-099 | 925-1745 | Ignition Key, Plastic Delta Switches |
| | 42-008 | | Ignition Key, Metal Indak-Type Switches |
| | 33-376 | 725-1741 | Ignition Switch |
| | 33-106 | 725-04228 | Ignition Switch |
| 5 | 33-399 | 01003581 | Ignition Switch |
| | 33-106 | 725-04019 | Ignition Switch |
| | 33-105 | 725-04227 | Ignition Switch, Only (Module Not Included) |
| | 33-083 | 725-04258 | Electric PTO Control Switch |
| | | 010112111 | Electric PTO Control Switch |
| 6 | | 725-4174 | Electric PTO Control Switch |
| | 33-002 | 725-1716 | Electric PTO Control Switch |
| | 33-083 | 725-04175 | Electric PTO Control Switch |
| 7 | 33-028 | 725-04039 | Brake Safety Switch |
| | 33-026 | 02000024 | Neutral Switch |
| 8 | 33-019 | 725-3166 | Reverse Switch |
| | 33-019 | 01001717 | Reverse Switch |
| 9 | 33-090 | 01003277 | Seat Switch |
| | 33-019 | 725-3166 | Seat Switch |
| 10 | | 01002251 | Relay, 12V, 40 Amp |
| | | 725-04164 | Relay, 12V, 40 Amp |
| 11 | 33-351 | | Electrical Terminal for Connectors |

## John Deere — 42" Decks, Fits Tractor Series Models 100, D100, LA100, & X100 with 7 pt. Star Center Hole Blades

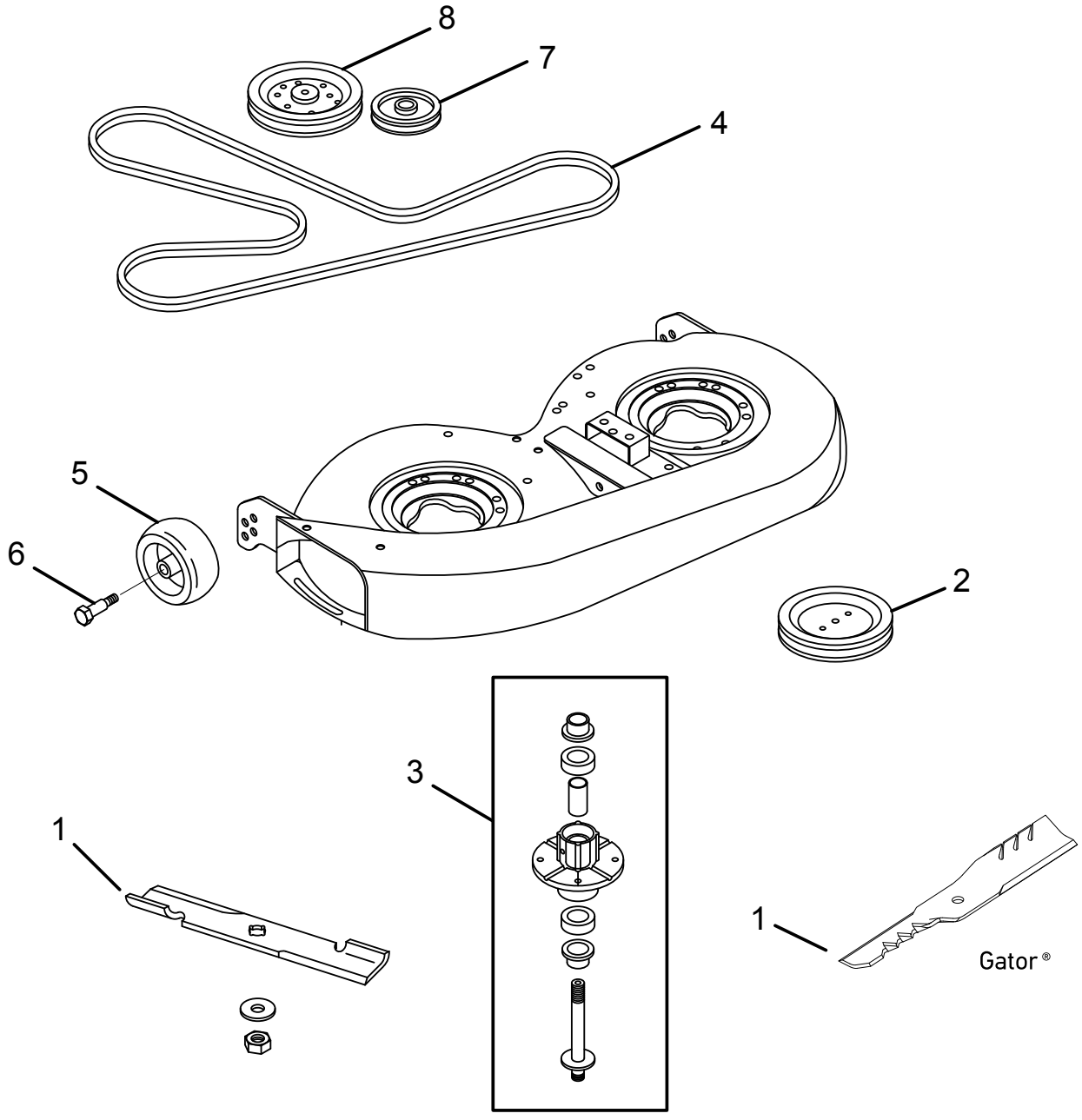

## John Deere — 42" Decks, Fits Tractor Series Models 100, D100, LA100, & X100 with 7 pt. Star Center Hole Blades

| № | Part No. | OEM No. | Description |
|---|---|---|---|
| **Blades for 42" Decks with 7 pt. Star Center Hole** | | | |
| | 192-106 | GX22151 | 100-Series, 21-3/8" Blade |
| 1 | 92-615 | | Gator® G3™, 21-3/8" Blade |
| | 592-615 | | Gator G5™, 21-3/8" Blade |
| **Replacement Parts** | | | |
| 2 | | GX20367 | Spindle Pulley |
| 3 | 82-359 | GY20962/GY20454 | Spindle Assembly |
| 4 | 75-919 | GY20570/GX20072 | Deck Drive Belt, 1/2" x 103-15/16" |
| 5 | 72-119 | GX10168 | Gauge Wheel |
| 6 | 04-163 | GX21012 | Gauge Wheel Bolt |
| 7 | 78-118-0 | GY20067 | Deck Idler |
| 8 | 34-109 | GY20629 | Deck Idler |

## John Deere — 38" & 42" Standard Decks, Series Models X300 & Z200

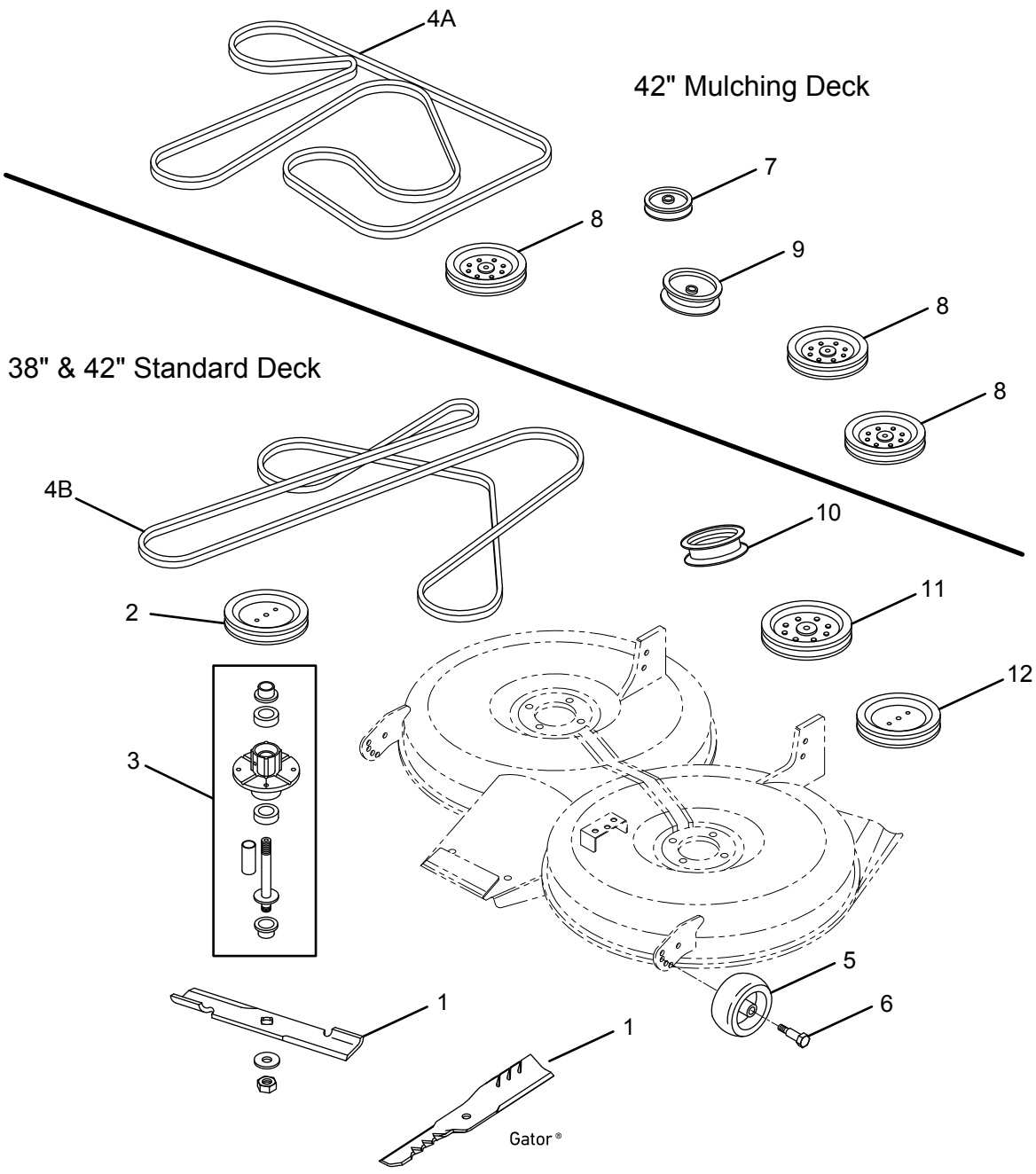

## John Deere — 38" & 42" Standard Decks, Series Models X300 & Z200

| № | Part No. | OEM No. | Description |
|---|---|---|---|
| **Blades for 38" Decks with 7 pt. Star Center Hole Blades** | | | |
| 1 | 92-109 | AM141039, M153118 | High-Lift, 19-7/16" |
| | 396-352 | | Gator® G6®, 19-7/16" |
| **Blades for 38" Decks with 11/16" Round Center Hole Blades** | | | |
| 1 | 191-392 | M82408 | 100-Series, Standard-Lift, 19-1/2" |
| | 91-398 | M83459 | Super High-Lift, 19-1/2" |
| | 91-400 | M84472 | Medium-Lift, 19-1/2" |
| | 91-403 | M112991 | Mulching, 19-1/2" |
| | 96-309 | | Gator G3™, 19-1/2" |
| | 596-309 | | Gator G5™, 19-1/2" |
| | 396-709 | | Gator G6, 19-1/2" |
| **Blades for 42" Decks with 7 pt. Star Center Hole Blades** | | | |
| 1 | 92-110 | M154061 | Standard-Lift, 21-3/8" |
| | | M154062 | High-Lift, 21-3/8" |
| | 96-615 | | Gator G3, 21-3/8" |
| | 596-615 | | Gator G5, 21-3/8" |
| **Blades for 42" Decks with 13/16" Round Center Hole Blades** | | | |
| | 91-604 | | Gator G3, 21-1/4" |
| **Replacement Parts** | | | |
| 2 | | M151720 | Spindle Pulley, for 38" & 42" Standard Decks |
| 3 | | AM134292 | Spindle Assembly, for 38" & 42" Decks |
| 4A | 75-801 | M153160 | Deck Drive Belt, for 42" Mulching Decks |
| 4B | 75-803 | M154621 | Deck Drive Belt, for 42" with & without Tension Handle, 1/2" x 143-3/16" |
| | 75-802 | M154601 | Deck Drive Belt, for 38" Decks with Tension Handle, 1/2" x 143-5/8" |
| | 75-804 | M155525 | Deck Drive Belt, for 38" Decks without Tension Handle, 1/2" x 142-5/16" |
| 5 | 72-094 | M111489 | Gauge Wheel |
| 6 | 04-163 | GX21012 | Gauge Wheel Bolt |
| 7 | 78-131 | AM118447 | V-Idler |
| 8 | | AM135957 | V-Idler, Before Serial Number 040000 |
| | 34-106 | AM136357 | V-Idler, After Serial Number 040001 |
| 9 | | TCA14595 | V-Idler, Before Serial Number 040000 |
| | 34-107 | AM136397 | V-Idler, After Serial Number 040001 |
| 10 | 34-104 | AM135773 | Flat Idler, 38" & 42" with & without Tension Handle |
| 11 | 34-106 | AM136357 | V-Idler, 38" & 42" Decks without Tension Handle |
| | | AM135957 | V-Idler, 38" & 42" Decks with Tension Handle |
| 12 | 34-103 | AM135526 | Flat Idler, 38" & 42" with & without Tension Handle |

## John Deere — 48" & 50" DECKS

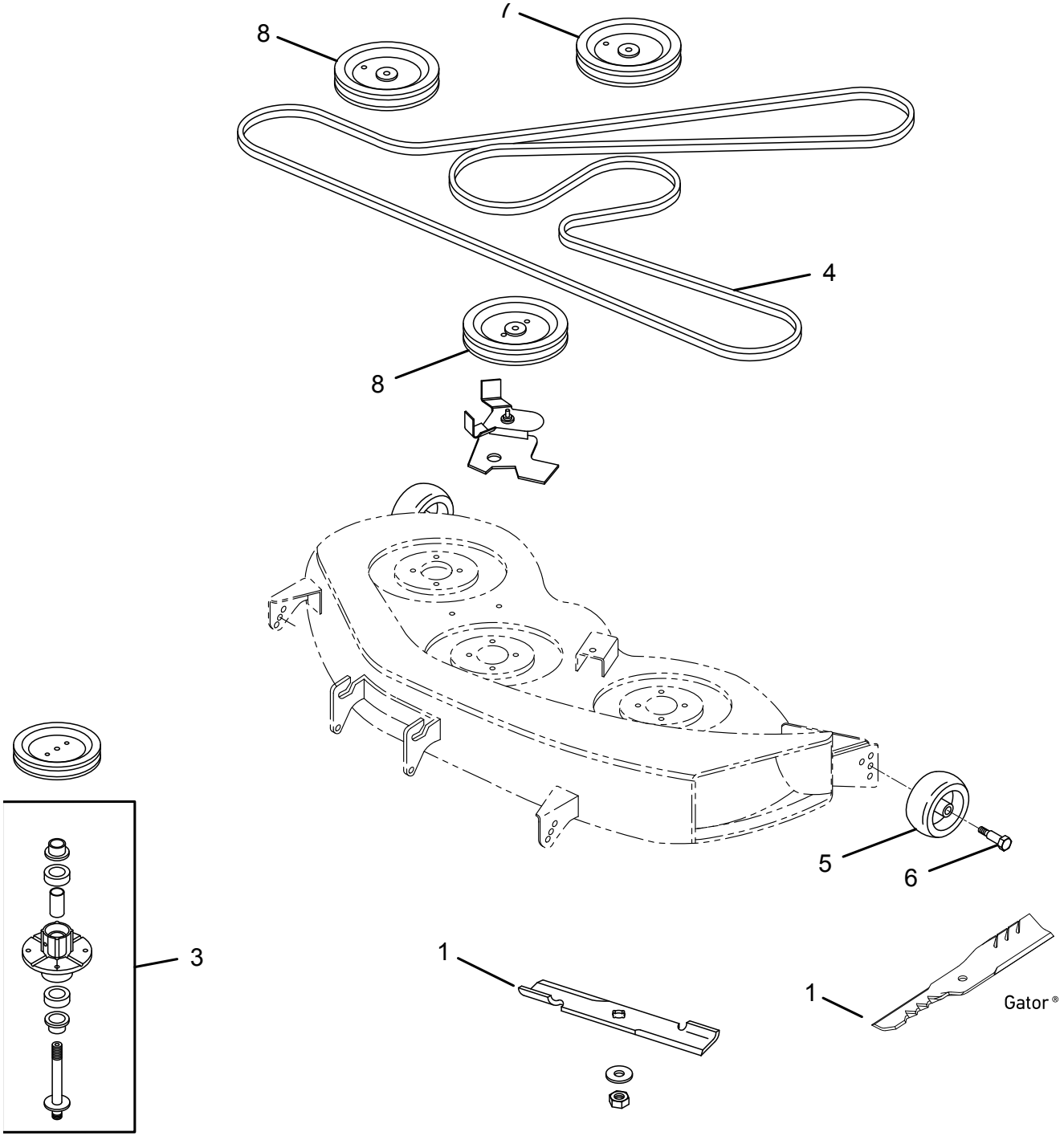

## John Deere — 48" & 50" Decks

| № | Part No. | OEM No. | Description |
|---|---|---|---|
| **Blades for 48" Decks with 13/16" Round Center Hole** | | | |
| 1 | 90-348 | M145476, M127500 | Mulching, 16-15/16" |
| | 96-354 | | Gator® G3™, 16-15/16" |
| | 596-354 | | Gator G5™, 16-15/16" |
| | 396-354 | | Gator G6®, 16-15/16" |
| **Blades for 48" Decks with 11/16" Round Center Hole** | | | |
| 1 | 191-108 | GX20250, GY20568 | 100-Series, Standard-Lift 17" |
| | 91-496 | GX20434 | High-Lift, 17" |
| | 92-675 | | Gator G3, 17" |
| **Blades for 48" Decks with 7 pt. Star Center Hole** | | | |
| 1 | 92-104 | GX21784, GY20852 | Standard-Lift, 17" |
| | 91-586 | GX21785 | High-Lift, 17" |
| | 92-105 | GX21786 | Mulching, 17" |
| | 92-616 | | Gator G3, 17" |
| | 592-616 | | Gator G5, 17" |
| **Blades for 48", 7-Iron Decks with 7/8" Round Center Hole** | | | |
| 1 | 91-079 | M136185 | Mulching, 17-1/16" |
| | 396-770 | | Gator G6, 17-1/16" |
| **Blades for 50" Decks with 11/16" Round Center Hole** | | | |
| 1 | 91-393 | AM39966, M86209 | Standard-Lift, 17-3/16" |
| | 396-738 | | Gator G5, 17-3/16" |
| **Replacement Parts** | | | |
| 3 | | TCA13807, AM124339 | Spindle Assembly, for 48", 7-Iron Decks |
| | | AM135349, AM124498, AM131680 | Spindle Assembly, for 48" Decks, fits GX, LX, X, & Z-Track Series |
| 4 | 75-800 | GX21833 | Deck Drive Belt, 48", 100-Series, 1/2" x 141-3/8" |
| | 175-992 | GX22036, GY20571 | Deck Drive Belt, 48", fits L100-Series, 1/2" x 139-11/16" |
| | 175-295 | M154958, M110313 | Deck Drive Belt, 48", fits LX100, LX200, & GX300 Series, 5/8" x 111-5/16" |
| 5 | 72-119 | GX10168 | Gauge Wheel, 100-Series, 5" x 2" |
| | 72-165 | AM133602 | Gauge Wheel Kit (with Hardware), 5" x 2-1/2" |
| | 72-129 | M115245 | Deck Roller, 3-3/4" x 3-3/8" |
| | 72-131 | M113955 | Deck Roller, 3" x 2-1/2" |
| 6 | 04-163 | GX21012 | Gauge Wheel Bolt |
| 7 | 78-118-0 | GY20067 | Deck Idler, 100-Series |
| 8 | 34-109 | GY20629 | Deck Idler, 100-Series |

## John Deere — 54" Decks, 100-Series

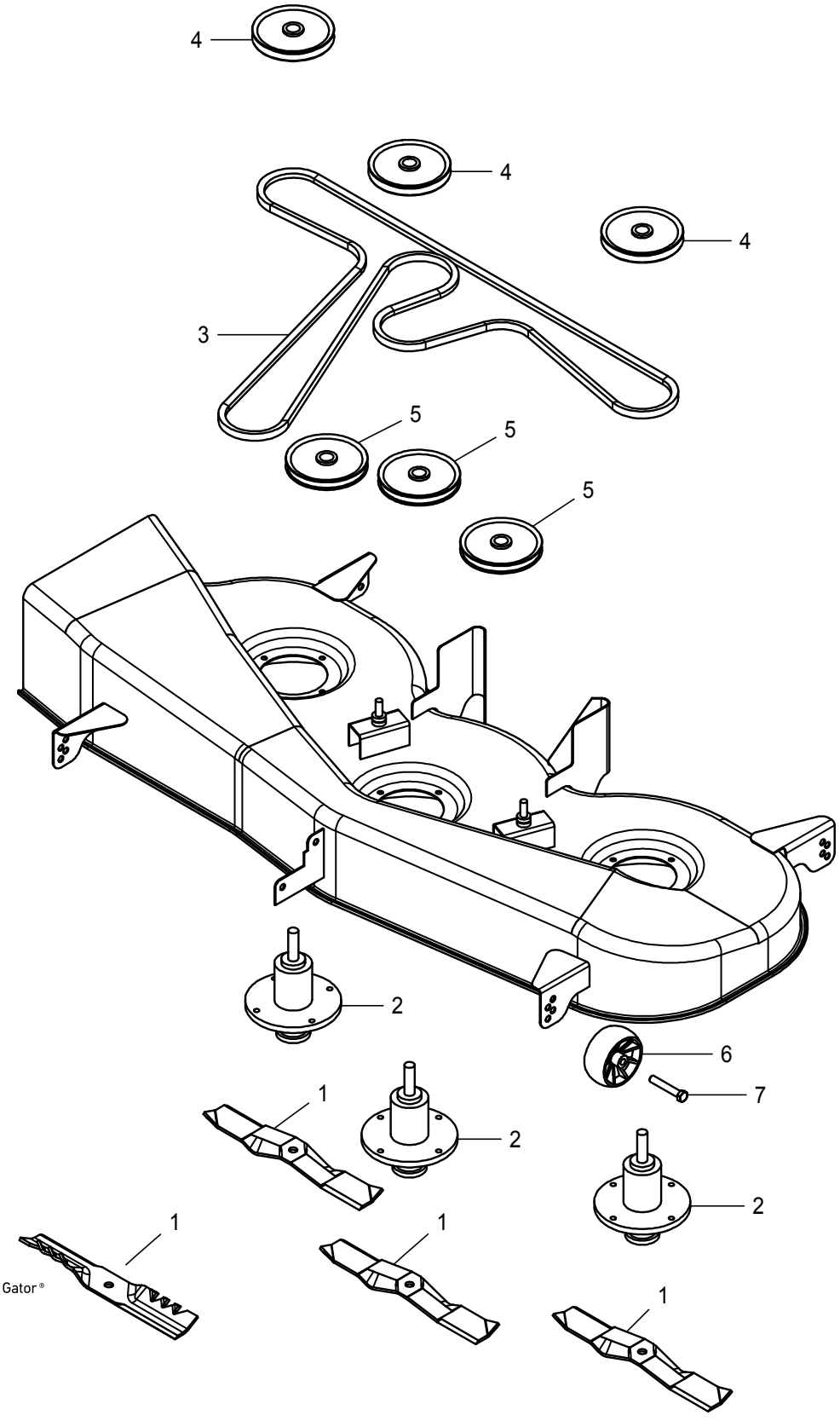

## John Deere — 54" Decks, 100-Series

| № | Part No. | OEM No. | Description |
|---|---|---|---|
| **Blades for Decks with 7 pt. Star Center Hole** | | | |
| | 92-103 | GX21380/GY20684/GY20679 | Standard-Lift 18-5/8" |
| 1 | 92-617 | | Gator® G3™ 18-5/8" |
| | 592-617 | | Gator G5™ 18-5/8" |
| **Replacement Parts** | | | |
| 2 | 82-360 | GY20867 | Spindle Assembly, for Decks, 100-Series |
| 3 | 75-799 | GX21395 | Deck Drive Belt, 100-Series, 5/8" x 161-9/16" |
| 4 | | GX21381 | Spindle Pulley, 100-Series |
| 6 | 34-109 | GY20629 | Flat Idler, 100-Series, 5-3/16" OD 1-5/8" Wide .669" ID |
| 6 | 72-119 | GX10168 | Gauge Wheel, 100-Series, 5" x 2" |
| 7 | 04-163 | GX21012 | Gauge Wheel Bolt |

## John Deere — 54" Decks LX & GT Series

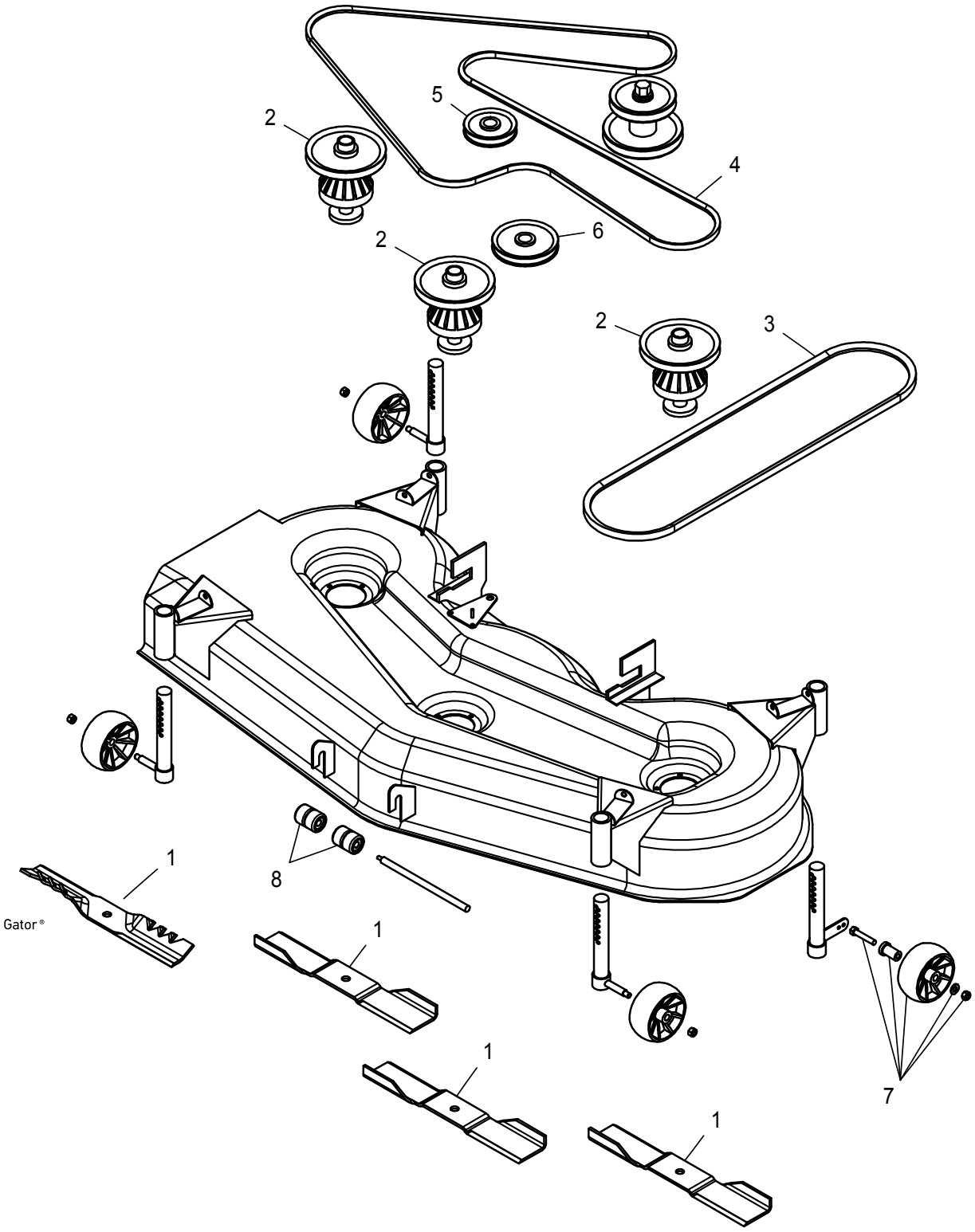

## John Deere — 54" Decks LX & GT Series

| № | Part No. | OEM No. | Description |
|---|---|---|---|
| **Blades for Decks with 13/16" Round Center Hole** | | | |
| 1 | 91-380 | M115496, M114582, M115329 | Standard-Lift, 18-5/8" |
| | 91-404 | M135590, M76767 | Performance Lift, 18-5/8" |
| | 91-384 | M113518 | Tricycler, 18-5/8" |
| | 96-306 | | Gator® G3™, 18-5/8" |
| | 596-306 | | Gator G5™, 18-5/8" |
| | 396-706 | | Gator G6®, 18-5/8" |
| **Blades for Decks with 13/16" Round Center Hole** | | | |
| 1 | 90-354 | M143520 | Standard-Lift, 19" |
| | 596-719 | | Gator G5, 19" |
| | 396-719 | | Gator G6, 19" |
| **Blades for 7-Iron Decks with 7/8" Round Center Hole** | | | |
| 1 | 91-138 | M136195/TCU30316 | Standard-Lift, 19-1/16" |
| | 92-118 | M144652/TCU30317 | High-Lift , 19-1/16" |
| | 96-364 | | Gator G3, 19-1/16" |
| | 596-769 | | Gator G5, 19-1/16" |
| | 396-769 | | Gator G6, 19-1/16" |
| **Replacement Parts** | | | |
| 2 | 82-333 | AM121342, AM115528, AM121229 | Spindle Assembly for Decks LX & GT Series |
| 3 | 175-300 | M143019 | Deck Primary Drive Belt, LX & GT Series, 5/8" x 65-1/8" |
| 4 | 75-984 | M118685 | Deck Secondary Drive Belt, LX & GT Series, 5/8" x 120-1/8" |
| 5 | 78-112 | AM37249 | Flat Idler, LX & GT Series, OD: 4-3/8", Width: 1", ID: .669" |
| 6 | 78-025 | AM106627 | Flat Idler, LX & GT Series, OD: 5-1/2", Width: 1-3/8", ID: .669" |
| 7 | 72-165 | AM133602 | Gauge Wheel Kit (with Hardware), 5" x 2-1/2" |
| 8 | 72-131 | M113955 | Deck Roller, 3" x 2-1/2" |

## John Deere — 60" Deck ZTrak B, M, & R Series

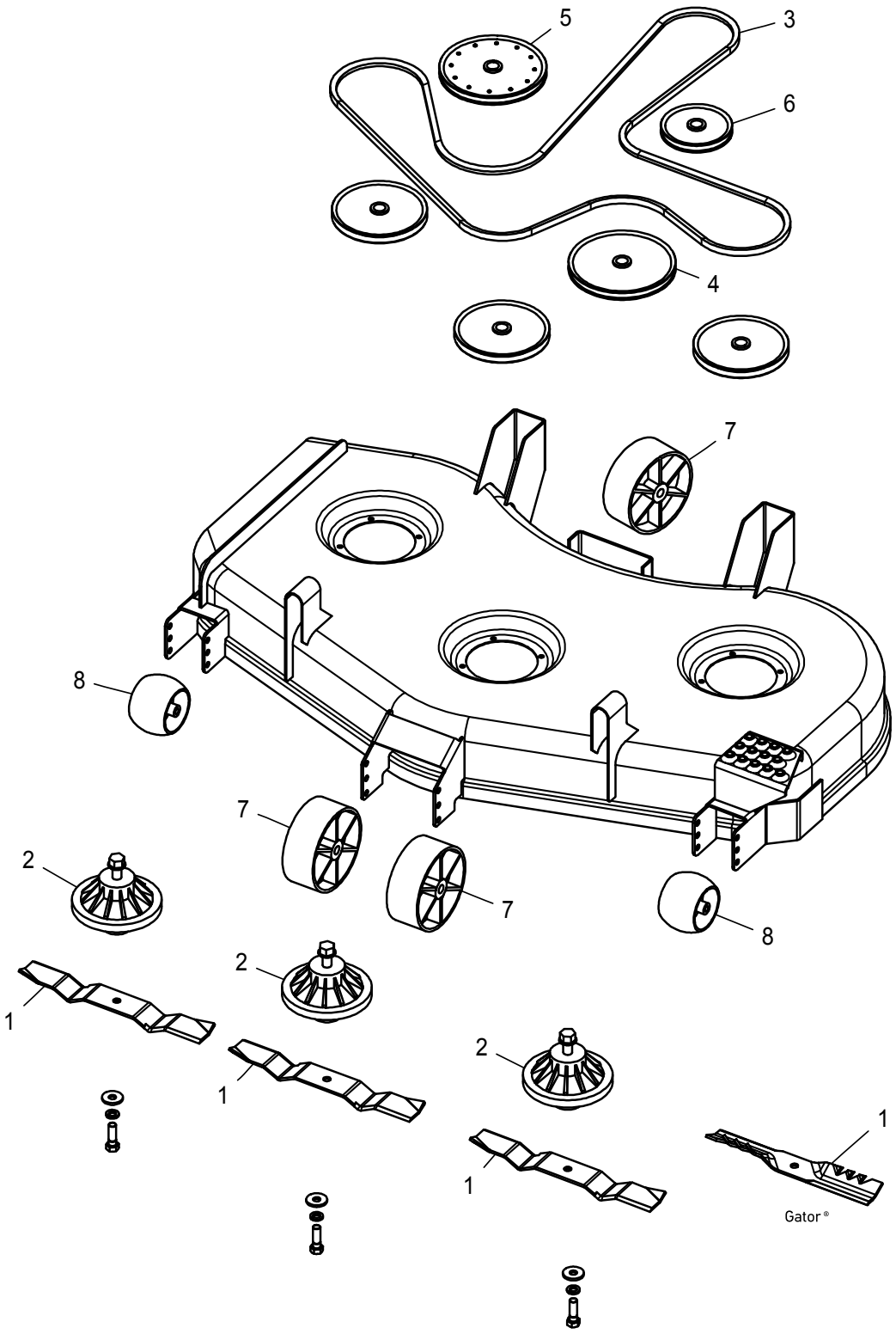

## John Deere — 60" Deck ZTrak B, M, & R Series

| № | Part No. | OEM No. | Description |
|---|---|---|---|
| **Blades for 60" Decks with 7/8" Round Center Hole** | | | |
| | 91-078 | M128485 | Standard-Lift, 21-1/16" |
| | 92-113 | TCU15881 | High-Lift, 21-1/16" |
| 1 | | M133381 | Low-Lift, 21-1/16" |
| | 596-730 | | Gator® G5™, 21-1/16" |
| | 396-730 | | Gator G6®, 21-1/16" |
| **Replacement Parts** | | | |
| 2 | | TCA20639, TCA17517 | Spindle Assembly, |
| 3 | | TCU35604, TCU30356 | Deck Belt, B, M, & R Series |
| 4 | | TCA17135 | Idler Pulley, B, M, & R Series |
| 5 | | TCA22651 | Idler Pulley, B, M, & R Series |
| 6 | | TCA20602 | Idler Pulley, B, M, & R Series |
| 7 | | TCU34060 | Deck Roller, B, M, & R Series |
| 8 | 72-032 | TCU18744 | Deck Wheel, B, M, & R Series |

## John Deere — 60" Decks, 4010, 4110, & 4115 C.U.T. Models

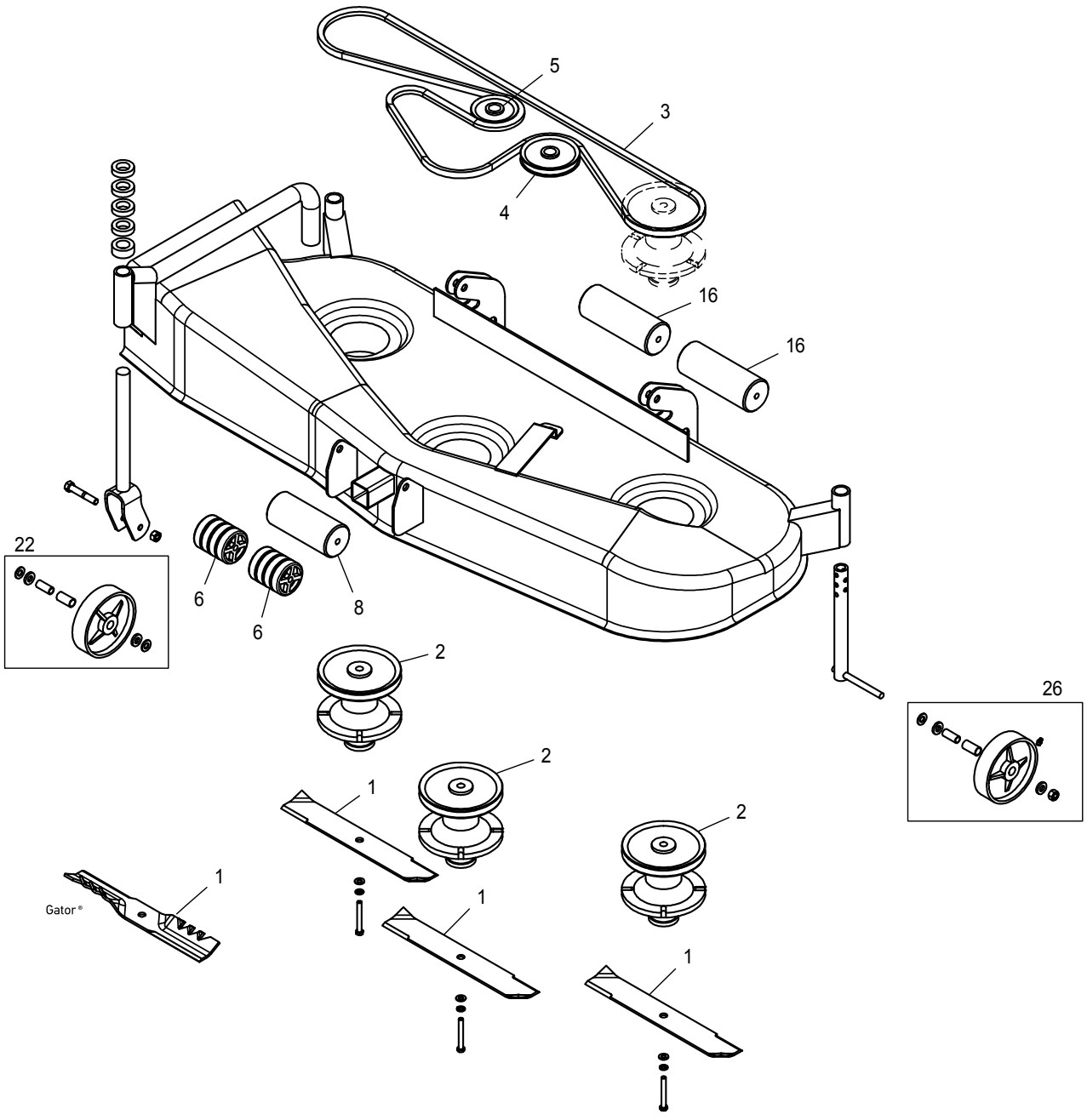

## John Deere — 60" Decks, 4010, 4110, & 4115 C.U.T. Models

| № | Part No. | OEM No. | Description |
|---|---|---|---|
| **Blades for 60" Decks with 7/8" Round Center Hole** | | | |
| | 91-394 | M141785 | Standard-Lift, 20-1/2" |
| 1 | 596-734 | | Gator® G5™, 20-1/2" |
| | 396-734 | | Gator G6®, 20-1/2" |
| **Replacement Parts** | | | |
| 2 | | AM123184 | Spindle Assembly |
| 3 | | M117636 | Deck Belt |
| 4 | 78-025 | AM106627 | Idler, 22 Cut, 4010 |
| 5 | 78-112 | AM37249 | Idler, 6 Cut, 4010 |
| 6 | 72-129 | M115245 | Deck Roller 4 |
| 7 | | AM101044 | Deck Roller 16 |
| 8 | | AM101042 | Deck Roller 26 |
| 9 | 72-098 | AM107560 | Deck Wheel 22 |
| 10 | 72-099 | AM107561 | Deck Wheel 26 |

## John Deere — 60" Decks 4210, 4310, & 4410 C.U.T. Models

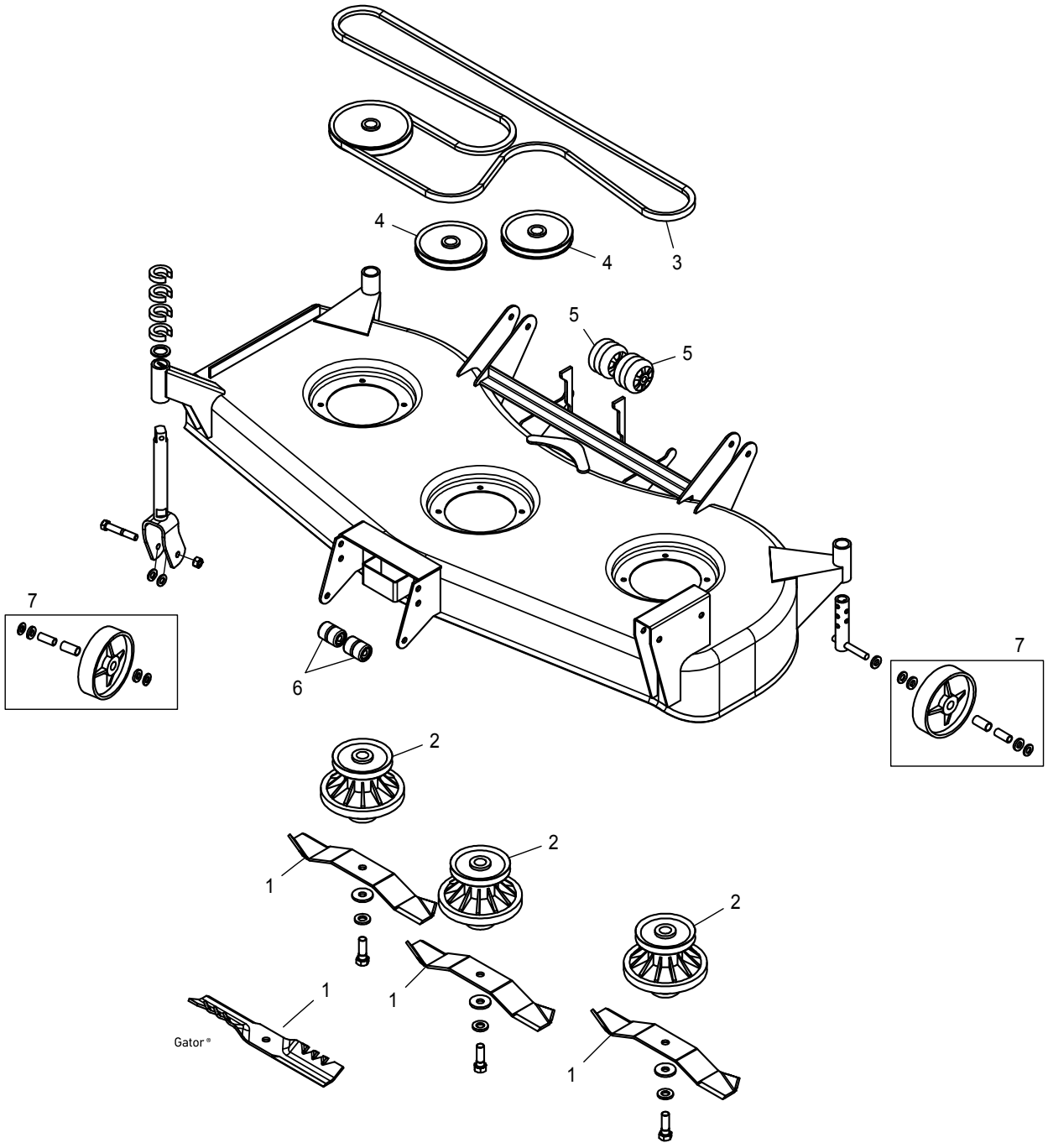

## John Deere — 60" Decks 4210, 4310, & 4410 C.U.T. Models

| № | Part No. | OEM No. | Description |
|---|---|---|---|
| **Blades for 60" Decks with 7/8" Round Center Hole** | | | |
| | 91-078 | M128485 | Standard Blade, 21-1/16" |
| | 92-113 | TCU15881 | High-Lift, 21-1/16" |
| 1 | | M133381 | Low-Lift, 21-1/16" |
| | 596-730 | | Gator® G5™, 21-1/16" |
| | 396-730 | | Gator G6®, 21-1/16" |
| **Replacement Parts** | | | |
| 2 | | TCA13807 | Spindle, 4210, 4310, & 4410 C.U.T. |
| 3 | | M136137 | Belt, 6, 4210 C.U.T. |
| 4 | | AM124925 | Idler, 7, 4210 C.U.T. |
| 5 | 72-129 | M115245 | Roller, 9, 4210, 4310, & 4410 C.U.T. |
| 6 | 72-131 | M113955 | Roller, 14, 4210, 4310, & 4410 C.U.T. |
| 7 | | AM107558 | Deck Wheel |

## John Deere — 62C Decks on C.U.T. & X400 Series

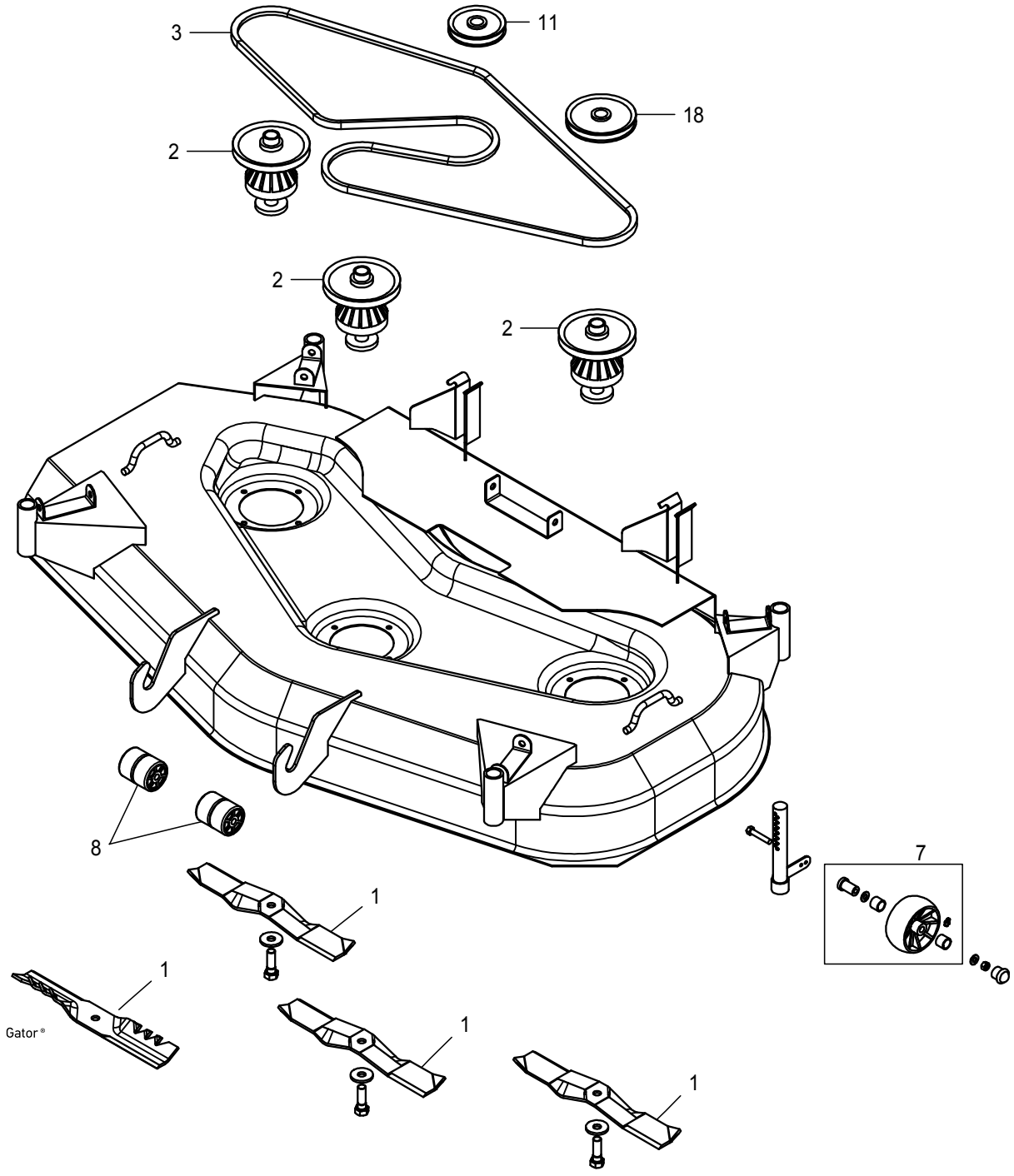

## John Deere — 62C Decks on C.U.T. & X400 Series

| № | Part No. | OEM № | Description |
|---|---|---|---|
| **Blades for 62" Decks with 3/4" Round Center Hole** | | | |
| | 90-309 | M143504 | High-Lift, 21-5/8" |
| 1 | 596-771 | | Gator® G5™, 21-5/8" |
| | 396-771 | | Gator G6®, 21-5/8" |
| **Replacement Parts** | | | |
| 2 | | AM135349 | Spindle Assembly, for 62"Decks (No Shaft/Pulley) |
| 3 | | M142997 | Deck Drive Belt, 62" (Secondary) 62C Deck |
| 4 | | M140059 | Spindle Pulley, 62" |
| 5 | 78-025 | AM106627 | Idler, 18 |
| 7 | 72-165 | AM125172 | Deck Wheel Kit |
| 8 | 72-131 | M113955 | Deck Roller |

## John Deere — 100 & X300 Series

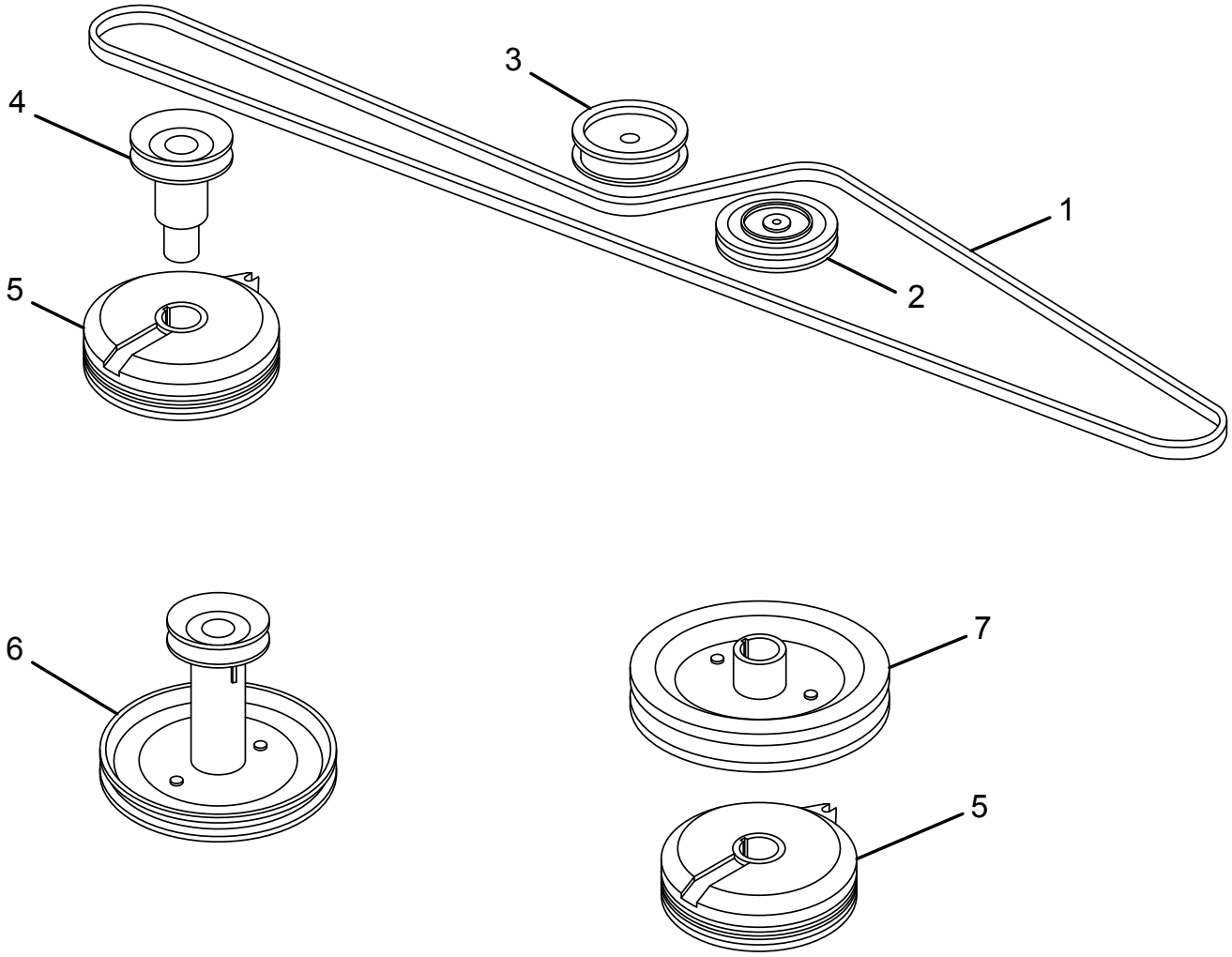

## John Deere — 100 & X300 Series

| № | Part No. | OEM No. | Description |
|---|---|---|---|
| 1 | 75-806 | GX22036 | Drive Belt, fits Traction Model 100, 1/2" x 92-5/16" |
| | 75-979 | GX20006 | Drive Belt, fits Traction Models 110, 120, 130, 140, & 150, 1/2" x 88-5/8" |
| | 75-807 | M152284 | Drive Belt, fits Traction Model X300, 1/2" x 93-9/16" |
| 2 | 34-102 | GX20286 | V-Idler, fits 100-Series |
| 3 | 78-129 | GX20287 | Flat Idler, fits 100-Series |
| | 34-100 | AM134501 | Flat Idler, fits X300 Series |
| 4 | | GY20129 | Engine Pulley, fits 100-Series with Electric PTO |
| 5 | | GY20878 | Electric PTO Clutch, fits 100-Series |
| | | AM134397 | Electric PTO Clutch, fits X300 Series |
| 6 | | GY20140 | Engine Pulley, fits 100-Series with Manual PTO |
| 7 | | AM134008 | Engine Pulley, fits X300 Series |

## John Deere 100 & X300 Series

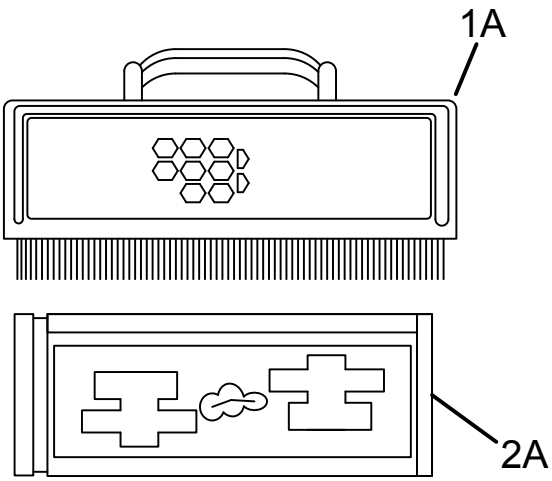


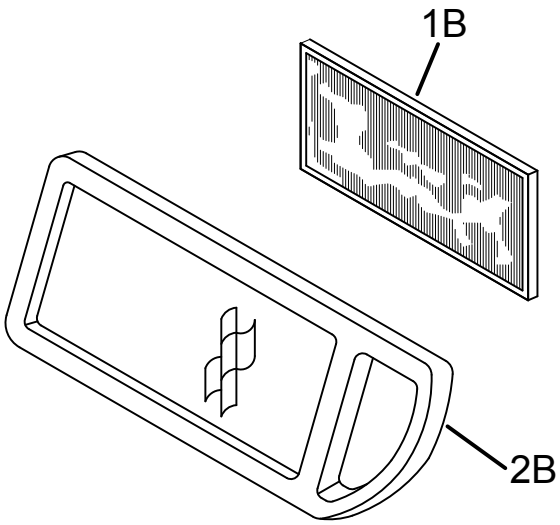


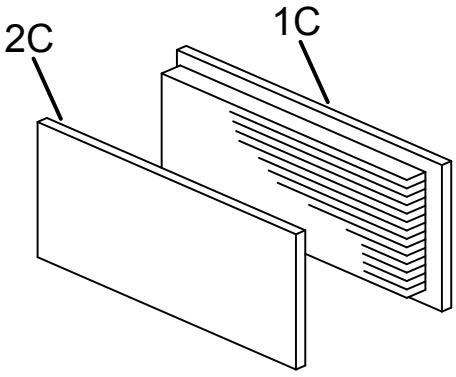


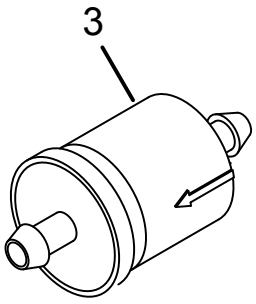


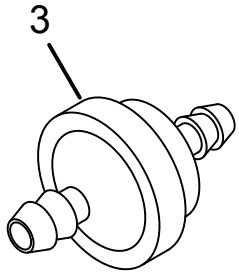


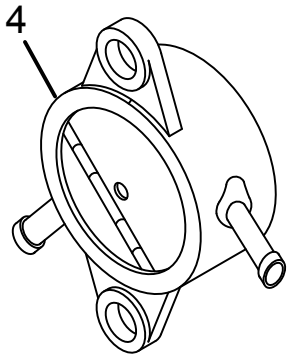


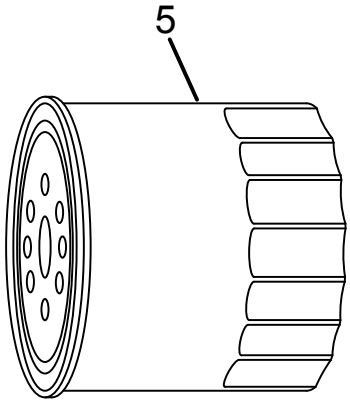

## John Deere 100 & X300 Series

| № | Part No. | OEM No. | Description |
|---|---|---|---|
| 1A | 30-032 | MUI11286 | Air Filter, fits 100-Series |
| 1B | 30-074 | M149171 | Air Filter, fits 100-Series |
| 1C | 30-057 | MUI10998 | Air Filter, fits X300 Series |
| 2A | 30-914 | LG273638S | Pre Filter, fits 100-Series |
| 2B | 30-076 | M147489 | Pre Filter, fits 100-Series |
| 2C | 30-921 | MUI10999 | Pre Filter, fits X300 Series |
| 3 | 07-103 | AM116304 | Fuel Filter |
| 4 | 07-700 | M147560 | Fuel Pump, fits 100, 110, & 120 Series Tractors |
| | 07-700 | LG808656 | Fuel Pump, fits 130, 140, & 150 Series Tractors |
| | 07-700 | M153011 | Fuel Pump, fits X300 Series Tractors |
| 5 | 83-013 | LG492932S | Oil Filter, fits 100-Series, OD: 3", Height: 2-1/4", Seal OD: 2-13/16" |
| | 83-284 | AM125424 | Oil Filter, fits 100-Series, OD: 3", Height: 2-5/8", Seal OD: 2-13/16" |
| | 83-283 | GY20577 | Oil Filter, fits 100-Series, OD: 3", Height: 3-1/8", Seal OD: 2-13/16" |
| | 83-282 | AM107423 | Oil Filter, fits X300 Series, OD: 2-3/4", Height: 2-7/8", Seal OD 2-3/4" |

## John Deere 100 & X300 Series Controls

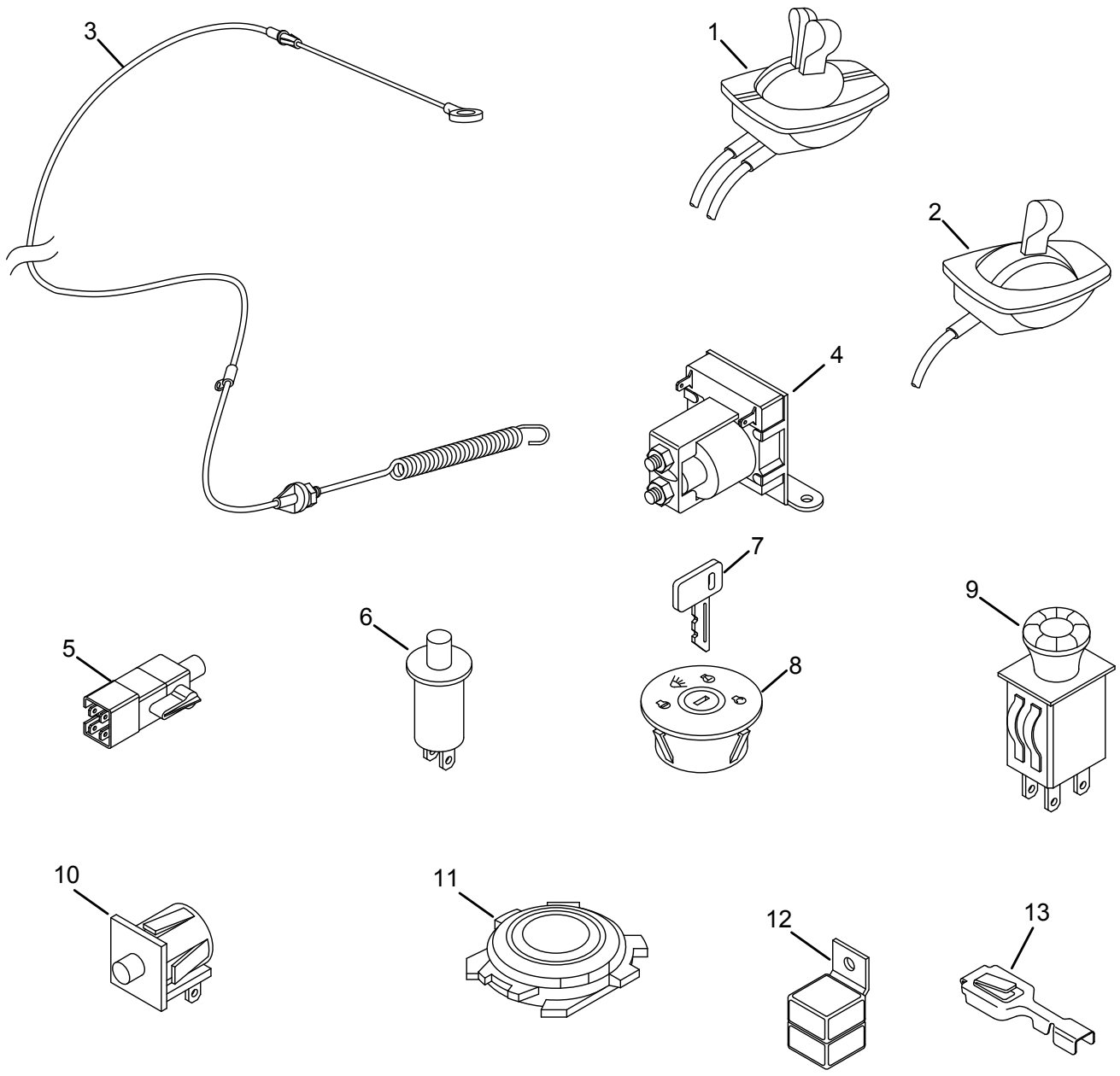

## John Deere 100 & X300 Series Controls

| № | Part No. | OEM No. | Description |
|---|---|---|---|
| 1 | | GY20948 | Throttle/Choke Control, fits 100-Series Tractors |
| | | AM134542 | Throttle/Choke Control, fits X300 Series Tractors |
| 2 | | GY20947 | Throttle Control, fits 100-Series Tractors |
| 3 | 60-079 | GY20156 | PTO Engagement Cable, fits 100-Series Tractors |
| 4 | 33-431 | AM133094 | Solenoid, fits 100-Series Tractors |
| | | MIU10981 | Solenoid, fits X300 Series Tractors |
| 5 | 33-085 | GY20094 | Brake Safety Switch, fits 100-Series Tractors |
| | | AMT469 | Brake Safety Switch, fits X300 Series Tractors |
| 6 | | AM124734 | RIO Switch, fits 100-Series Tractors |
| | | LVA13307 | Reverse Switch, fits X300 Series Tractors |
| 7 | 33-099 | AM123426 | Ignition Key, fits 100-Series Tractors |
| | 33-099 | AM135345 | Ignition Key, fits X300 Series Tractors |
| 8 | 33-376 | GY20074 | Ignition Switch, fits 100-Series Tractors |
| | 33-074 | AM133596 | Ignition Switch, fits X300 Series Tractors Before Serial #040001 |
| | 33-376 | AM133597 | Ignition Switch, fits X300 Series Tractors After Serial #040001 |
| 9 | | GY20939 | Electric PTO Control Switch, fits 100-Series Tractors |
| | | AM135131 | Electric PTO Control Switch, fits X300 Series Tractors |
| 10 | | GY20073 | Seat Switch, fits 100-Series Tractors |
| | | AM130454 | Seat Switch, fits X300 Series Tractors Before Serial #040001 |
| 11 | | AM130453 | Seat Switch, fits 100-Series Tractors |
| | | AM130453 | Seat Switch, fits X300 Series Tractors After Serial #040001 |
| 12 | | AM106305 | Relay, fits 100 & X300 Series Tractors |
| 13 | 33-351 | U46662 | Electrical Terminal for Connectors |

## MTD 38" & 42" Decks (2 Blades)

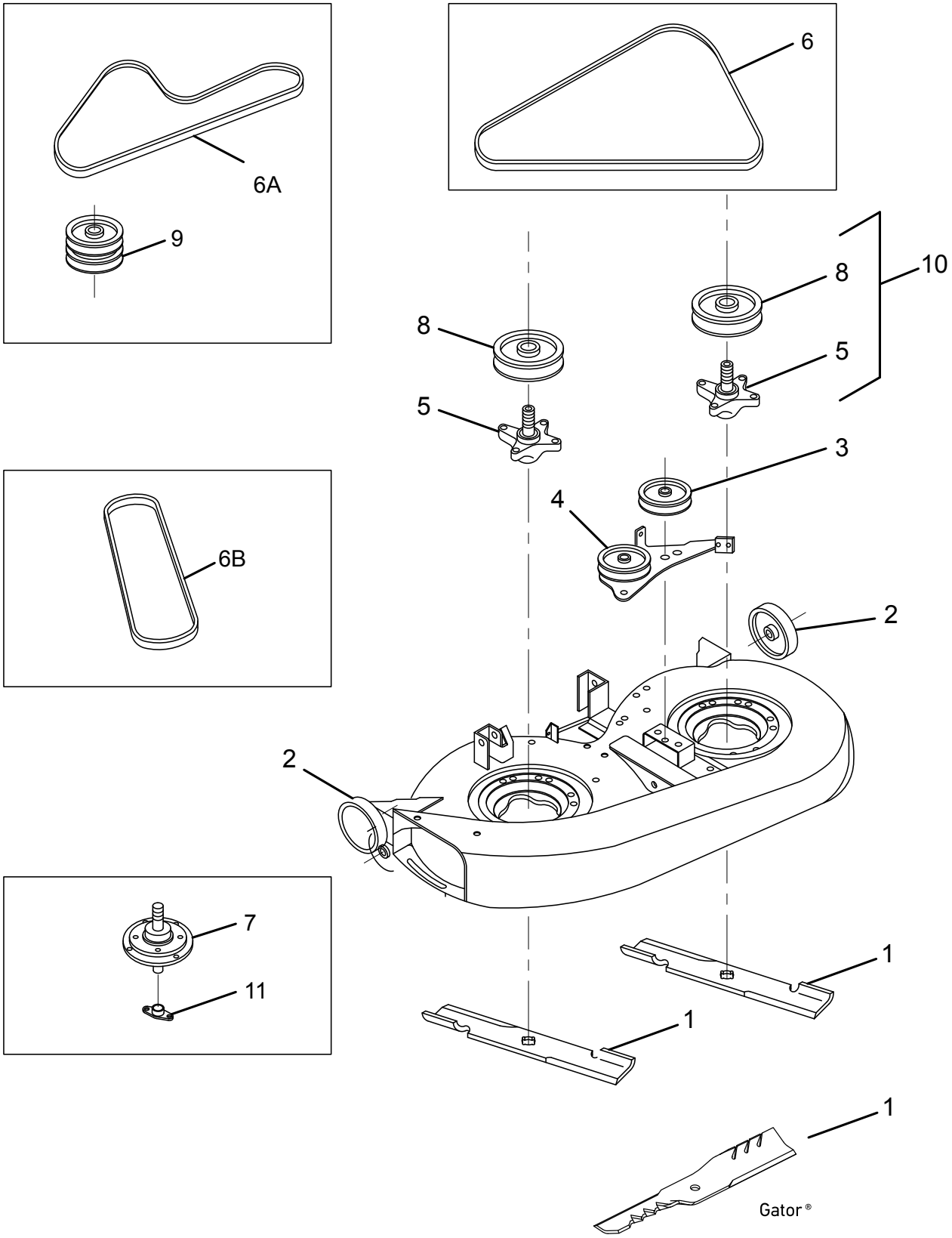

## MTD 38" & 42" Decks (2 Blades)

| № | Part No. | OEM No. | Description |
|---|---|---|---|
| **Blades for 38" Decks with 5/8" 6 pt. Star Center Hole** | | | |
| 1 | 198-058 | 742-0610 | 100-Series, Mulching, 19-5/16" |
| | 198-052 | 742-610 | 100-Series, Standard-Lift, 19-5/16" |
| | 98-628 | | Gator® G3™, 19-5/16" |
| | 598-628 | | Gator G5™, 19-5/16" |
| **Blades for 42" Decks with 3/8" Round Center Hole 5/16" Outer Holes** | | | |
| 1 | | 742-0503 | Sand Lift, 21-3/16" |
| | 98-499 | 742-0499A | High-Lift, 21-3/16" |
| | 98-600 | | Gator G3, 21-3/16" |
| | 598-600 | | Gator G5, 21-3/16" |
| **Blades for 42" Decks with 5/8" 6 pt. Star Center Hole** | | | |
| 1 | 198-059 | 742-0616A | 100-Series, Mulching, 21-3/16" |
| | 98-093 | 742-0616A | High-Lift, 21-3/16" |
| | 198-153 | | 100-Series, High-Lift, 21-3/16" |
| | 98-629 | | Gator G3, 21-3/16" |
| | 598-629 | | Gator G5, 21-3/16" |
| **Replacement Parts** | | | |
| 2 | 72-318 | 734-0973 | Gauge Wheel, 4-3/4" x 1-3/8" |
| 3 | 78-019 | 756-0116 | V-Idler Pulley, OD: 3", W: 13/16", ID: 3/8" |
| | 78-029 | 756-1208 | V-Idler Pulley, OD: 4", W: 11/16", ID: 3/8" |
| 4 | 78-098 | 756-0229 | Flat Idler Pulley, OD: 4-7/8", FOD: 4", W: 1-1/8", FW: 3/4", ID: 3/8" |
| | 78-050 | 756-0365 | Flat Idler Pulley, OD: 4-1/8", FOD: 3-1/2", W: 1-1/16", FW: 3/4", ID: 3/8" |
| | 34-041 | 756-0627 | Flat Idler Pulley, OD: 4-1/8", FOD: 3-1/2", W: 1-1/4", FW: 7/8", ID: 3/8" |
| | 78-046 | 756-1229 | Flat Idler Pulley, OD: 4-7/8", FOD: 4", W: 1", FW: 3/4", ID: 3/8" |
| | 78-047 | 756-3105 | Flat Idler Pulley, OD: 5-3/4", FOD: 5", W: 1-1/2", FW: 1", ID: 3/8" |
| | 78-028 | 756-0981A | Flat Idler Pulley, OD: 3-1/8", FOD: 2-3/4", W: 1-1/4", FW: 7/8", ID: 3/8" |
| 5 | 82-513-2 | 618-0138 | Spindle Assembly without Pulley, for 38" Cut, Use with Oregon 44-102 Pulley |
| | 82-513-2 | 618-0142 | Spindle Assembly without Pulley, for 42" Cut, Use with Oregon 44-369 Pulley |
| | 04-015 | 912-0417A | Spindle Nut (Not Shown) |
| 6 | 75-145 | 754-0145 | Deck Belt, for 38" Cut (1971 – 1987), 5/8" x 69-5/16" |
| | 75-025 | 754-0364 | Deck Belt, for 38" Cut, fits 400 Series Models (1988–1998), 5/8" x 68-1/4" |
| | 75-028 | 754-0371A | Deck Belt, for 42" Cut (1989 – 1996), 5/8" x 74-1/4" |
| | 75-029 | 754-0329A | Deck Belt, for 38" Cut, fits 600 Series Models (1994 – 1997), 21/32" x 69-1/4" |
| | 75-361 | 754-0472 | Deck Belt, for 42" Cut Auto Drive Units with Electric PTO, 5/8" x 83-1/4" |
| | 75-263 | 754-0485 | Deck Belt, for 42" Cut Auto Drive Units with Manual PTO, 5/8" x 97-1/4" |
| 6A | 75-677 | 754-0498 | Deck Belt, for 42" Cut, fits 600 Series Models with 2-Belt Deck, 1/2" x 67-1/4" |
| 6B | 75-676 | 754-0497 | PTO Belt, for 42" Cut, fits 600 Series Models with 2-Belt Deck, 1/2" x 60-3/8" |
| 7 | 82-500 | 917-0906A | Spindle Assembly, for 38" & 42" Cut (1991–1996) with Splined Shaft to Accept Blade Adapter |
| 8 | 44-102 | 756-0969 | Spindle Pulley, for 38" Cut |
| 8 | 44-369 | 756-0980 | Spindle Pulley, for 42" Cut |
| 9 | 44-103 | 756-1202 | Double Pulley with Bearings, for 42" Cut Decks with 2 Belts |
| 10 | 82-517 | 918-0574 | Spindle Assembly with Pulley, for 42" Cut, fits Late Model 600 Series |
| 11 | 65-221 | 748-0300 | Blade Adapter |

## MTD 46", 50", & 54" Decks (3 Blades)

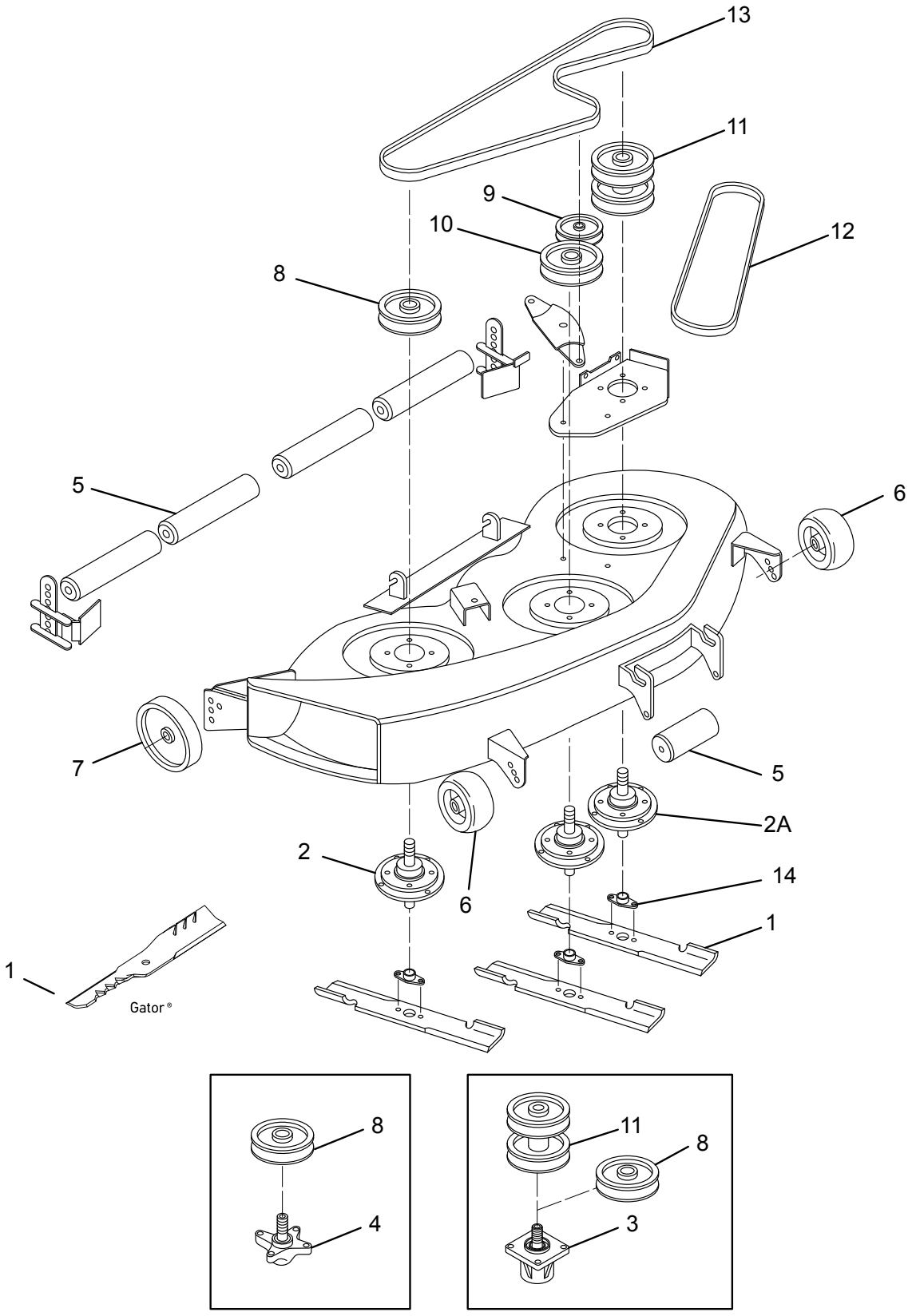

## MTD 46", 50", & 54" Decks (3 Blades)

| № | Part No. | OEM No. | Description |
|---|---|---|---|
| **Blades for 46" Decks with 11/16" 6 pt. Star Center Hole, (1995 & Earlier)** | | | |
| 1 | 98-056 | 742-0543 | Blade, Center, 14-13/16" |
| | 98-057 | 742-0542 | Blade, OutSide, 16-1/4" |
| **Blades for 46" Decks with 5/8" 6 pt. Star Center Hole (1996 & Later)** | | | |
| 1 | 98-069 | 742-0645 | Blade, Center, 14-13/16" |
| | 98-670 | | Gator® G3™ 14-13/16" |
| | 98-054 | 742-0644 | Blade, Outside, 16-1/4" |
| | 98-634 | | Gator G3 16-1/4" |
| **Blades for 46" Decks with 5/8" 6 pt. Star Center Hole (1999 & Later)** | | | |
| 1 | 98-061 | 742-0612 | Mulch Blade, Center, 14-7/8" |
| | 198-063 | 742-0611 | 100-Series, Mulch Blade, Outside, 16-1/4" |
| | 98-637 | | Gator G3, 14-7/8" |
| | 98-640 | | Gator G3, 16-1/4" |
| **Blades for 50" Decks with 5/8" 6 pt. Star Center Hole (1998 & Later)** | | | |
| 1 | 98-064-1 | 742-0738 | Standard-Lift, 17-5/16" |
| | 98-087 | 742-04056C | High-Lift, Bagger, 17-5/16" |
| | 598-064 | | Gator G5™, 17-5/16" |
| **Blades for 54" Decks with 5/8" 6 pt. Star Center Hole (2002 & Later)** | | | |
| 1 | 98-072 | 742-0677 | High-Lift, 18-1/2" |
| | 98-672 | | Gator G3, 18-1/2" |
| | 598-672 | | Gator G5, 18-1/2" |
| | 398-672 | | Gator G6®, 18-1/2" |
| **Replacement Parts** | | | |
| 2 | 82-502 | 717-0912 | Spindle Assembly, for 46" Cut (1988 – 1992), Single Pulley |
| | 82-503 | 717-0913 | Spindle Assembly, for 46" Cut (1988 – 1992), Double Pulley |
| 3 | 82-511 | 618-0117 | Spindle Assembly, for 46" Cut Star Blades (1993 – 1996), Double Pulley |
| | 82-512 | 618-0116 | Spindle Assembly, for 46" Cut Star Blades (1993 – 1996), Single Pulley |
| | 82-515 | 618-0240 | Spindle Assembly, for 46" Cut Star Blades (1997 & Later), Single Pulley |
| | 82-516 | 618-0241 | Spindle Assembly, for 46" Cut Star Blades (1997 & Later), Double Pulley |
| | 82-518 | 618-0595 | Spindle Assembly, for 46" Cut Star Blades, Late Model 800, Tall Double Pulley |
| | 82-043 | 918-05016 | Spindle Assembly, for 50" Cut Star Blades (2012), Single Pulley |
| 4 | 82-519 | 918-0671 | Spindle Assembly, for 54" Cut Star Blades, Late Model 800, Single Pulley |
| 5 | 72-319 | 731-3005 | Deck Roller, 6" x 2-1/2" |
| 6 | 72-308-1 | 734-3058 | Gauge Wheel (Oval Type), 5" x 2-5/8" |
| 7 | | 734-0974 | Gauge Wheel, 6" x 1-3/8" |
| 8 | 44-102 | 756-0969 | Spindle Pulley, OD: 5", ID: 5/8", Splined |
| 9 | 78-019 | 756-0116 | V-Idler Pulley, OD: 3", W: 13/16", ID: 3/8" |
| | 78-029 | 756-1208 | V-Idler Pulley, OD: 4", W: 11/16", ID: 3/8" |
| 10 | 78-098 | 756-098 | Flat Idler Pulley, OD: 4-7/8", FOD: 4", W: 1-1/8", FW: 3/4", ID: 3/8" |
| | 78-050 | 756-0365 | Flat Idler Pulley, OD: 4-1/8", FOD: 3-1/2", W: 1-1/16", FW: 3/4", ID: 3/8" |
| | 34-041 | 756-0627 | Flat Idler Pulley, OD: 4-1/8", FOD: 3-1/2", W: 1-1/4", FW: 7/8", ID: 3/8" |
| | 78-046 | 756-1229 | Flat Idler Pulley, OD: 4-7/8", FOD: 4", W: 1", FW: 3/4", ID: 3/8" |
| | 78-047 | 756-3105 | Flat Idler Pulley, OD: 5-3/4", FOD: 5", W: 1-1/2", FW: 1", ID: 3/8" |
| | 78-028 | 756-0981A | Flat Idler Pulley, OD: 3-1/8", FOD: 2-3/4", W: 1-1/4", FW: 7/8", ID: 3/8" |
| 11 | 44-101 | 756-0603 | Spindle Pulley Double |
| 12 | 75-008 | 754-0230 | PTO Belt, for 50" Cut, 1/2" x 56-1/4" |
| | 75-035 | 754-0350 | PTO Belt, for 46" Cut, fits 800 Series, 5/8" x 64-1/4" |
| | 75-159 | 754-0439 | PTO Belt, for 46" Cut, fits 600 Series, 5/8" x 60-1/4" |
| | 75-362 | 754-0474 | PTO Belt, for 46" Cut, fits 600 Series with Electric PTO, 5/8" x 101-1/2" |
| | 75-264 | 754-0486A | PTO Belt, for 46" Cut (2000 & Later) with Manual PTO, 5/8" x 67-1/4" |
| 13 | 75-079 | 754-0197 | Deck Belt, for 50" Cut, fits 900 Series, 1/2" x 117-1/8" |
| | 75-021 | 754-0349 | Deck Belt, for 46" Cut, fits 800 Series, 1/2" x 79-5/16" |
| | 75-161 | 754-0440 | Deck Belt, for 46" Cut, fits 600 Series, 1/2" x 99-3/16" |
| | 75-364 | 754-0476 | Deck Belt, for 46" Cut Auto Drive with Electric PTO, 5/8" x 100-1/4" |
| | 75-994 | 754-0642 | Deck Belt, for 54" Cut Auto Drive with Electric PTO, 5/8" x 138-3/16" |
| 14 | 65-221 | 784-300 | Blade Adapter |

## Murray 38", 40", & 42"

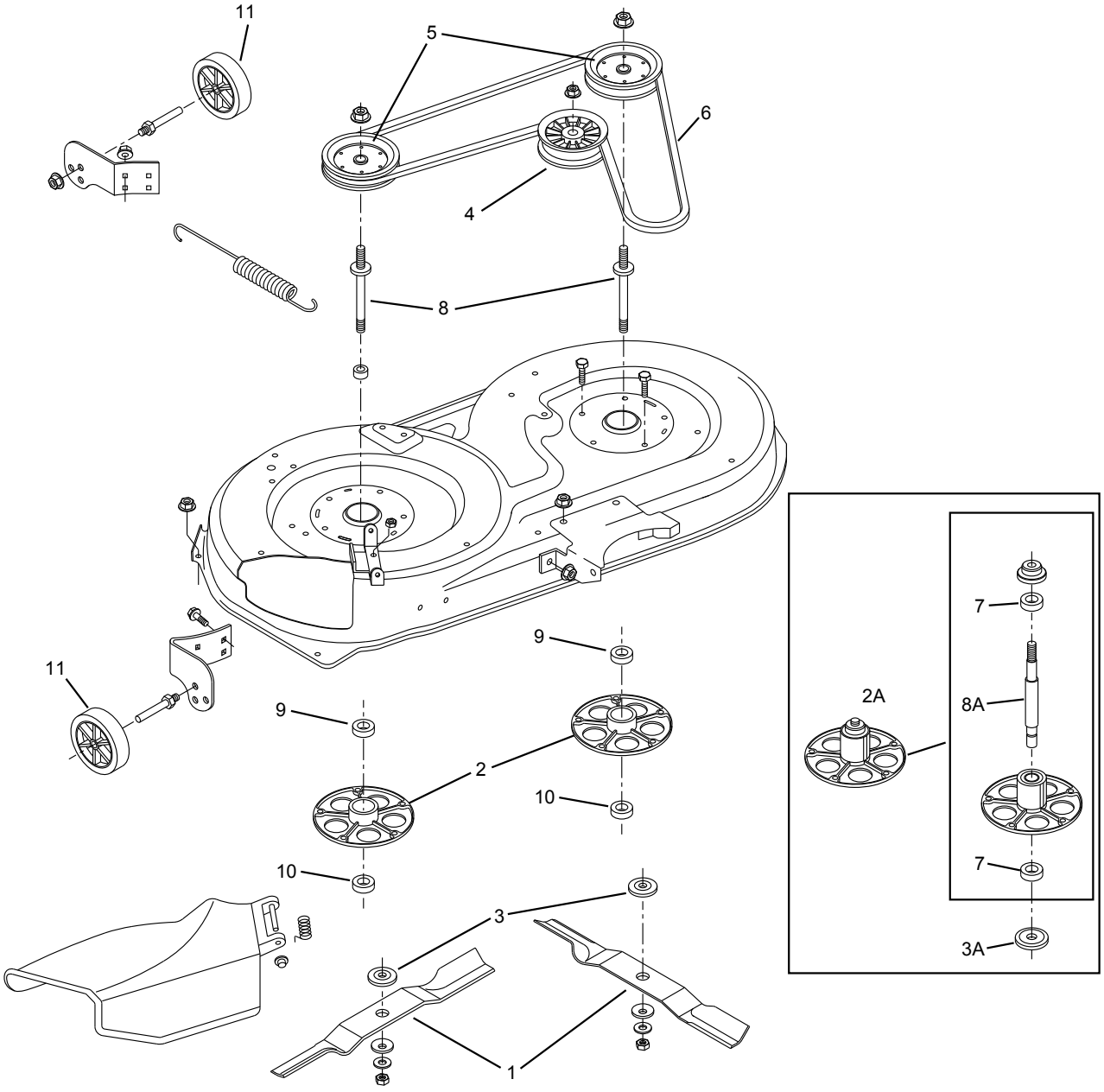

## Murray 38", 40", & 42"

| № | Part No. | OEM № | Description |
|---|---|---|---|
| **Blades for 38" Decks with 13/16" Round Center Hole** | | | |
| | 97-010 | 92003E701MA | Low-Lift, 19-1/2" |
| | 97-107 | 91742E701MA | High-Lift, 19-1/2" |
| 1 | 97-118 | 91742E701MA | High-Lift, Heavy-Duty, 19-1/2" |
| | 97-021 | 95104E701MA | Mulching, 19-1/2" |
| | 597-602 | | Gator® G5™, 19-1/2" |
| **Blades for 40" Decks with 7/8" Round Center Hole** | | | |
| | 97-006 | 92002E701MA | Low-Lift, 20-3/8" |
| | 97-109 | 91871E701MA | High-Lift, 20-3/8" |
| 1 | 97-119 | 91871E701MA | High-Lift, Heavy-Duty, 20-3/8" |
| | 97-604 | | Gator G3™, 20-3/8" |
| **Blades for 42" Decks with 13/16" Round Center Hole** | | | |
| | 97-020 | 92419E701MA | Low-Lift, 21-1/4" |
| | 97-014 | 92419E701MA | Low-Lift, Heavy-Duty, 21-1/4" |
| | 97-008 | 92418E701MA | High-Lift, 21-1/4" |
| 1 | 97-013 | 95101E701MA | High-Lift, Heavy-Duty, 21-1/4" |
| | 97-005 | 56252E701MA | Mulching, 21-1/4" |
| | 97-601 | | Gator G3, 21-1/4" |
| | 597-601 | | Gator G5, 21-1/4" |
| **Replacement Parts** | | | |
| 2 | 82-243 | 92574 | Spindle Assembly |
| | 82-023 | 92574 | Spindle Assembly, Magnum, Heavy-Duty Version of Oregon 82-243 |
| 3 | 65-208 | 92466 | Blade Adapter |
| 3A | 65-204 | 690411 | Blade Adapter |
| 4 | 34-822 | 91801 | Idler Pulley |
| 5 | | 92852 | Spindle Pulley, for 38" Decks |
| | | 92851 | Spindle Pulley, for 40" Decks |
| | 44-339 | 94199 | Spindle Pulley, for 42" Decks, OD: 5-3/8" |
| | 44-343 | 92425 | Spindle Pulley, for 42" Decks, OD: 6-1/4" |
| 6 | 75-266 | 37x86 | Deck Belt, for 38", 1/2" x 84-11/16" |
| | 75-041 | 37x62 | Deck Belt, for 40", 1/2" x 86-3/8" |
| | 75-135 | 37x88 | Deck Belt, for 42", 1/2" x 89-5/8" |
| 7 | 45-257 | 1001196 | Spindle Bearing |
| 8 | 85-028 | 94129 | Spindle Shaft |
| 8A | | 1001195 | Spindle Shaft |
| 9 | 45-243 | | Spindle Bearing |
| 10 | 45-242 | | Spindle Bearing |
| 11 | 72-094 | 92683 | Deck Wheel |

## Murray 46" (1999–2009)

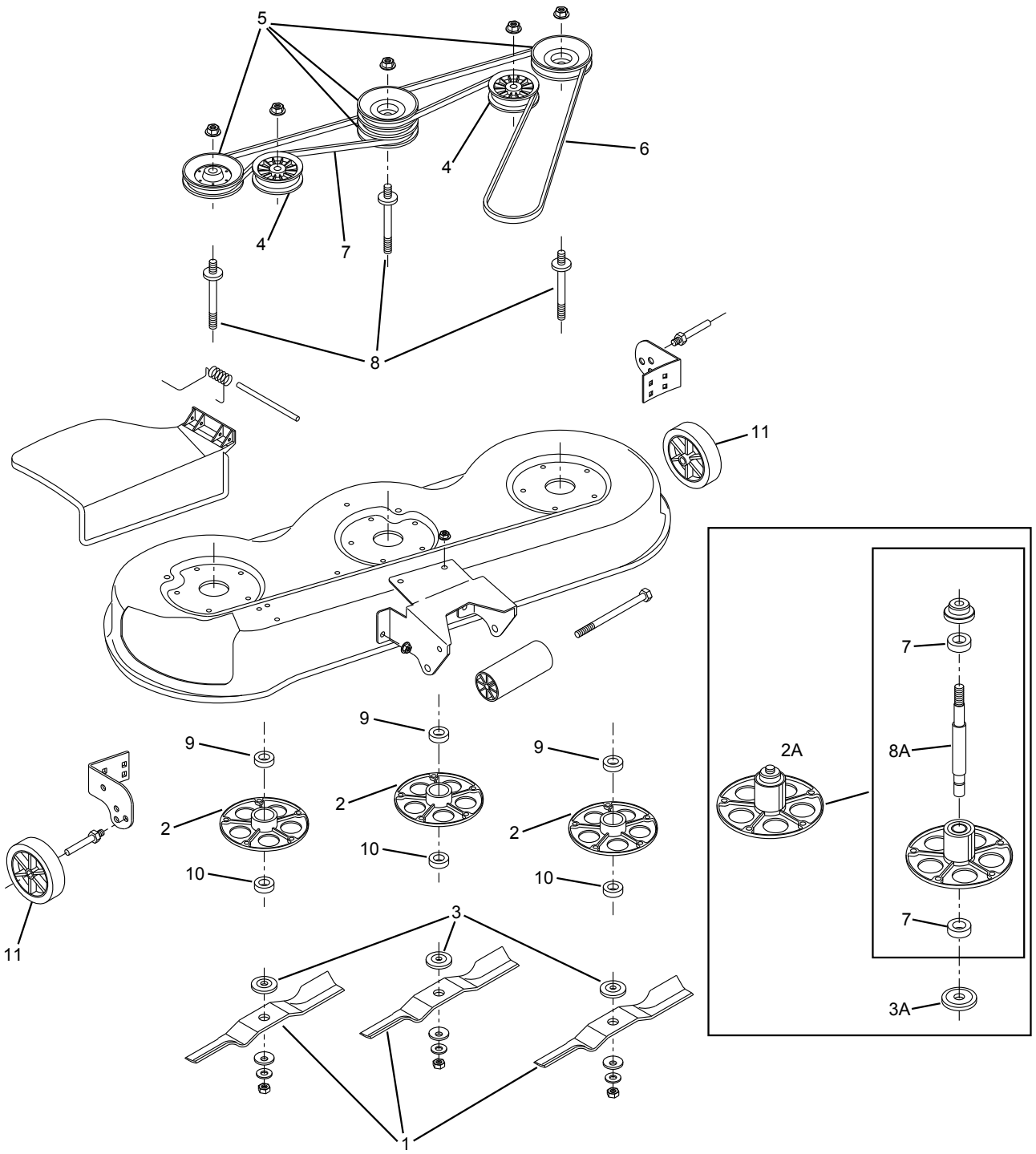

## Murray 46" (1999–2009)

| № | Part No. | OEM No. | Description |
|---|---|---|---|
| **Blades for 46" Decks with 13/16" Round Center Hole** | | | |
| | 97-123 | 92117E701MA | High-Lift, 15-3/4" |
| | 97-012 | 92117E701MA | High-Lift, Heavy-Duty, 15-3/4" |
| 1 | 97-017 | 656631 | Mulching, 15-3/4" |
| | 97-606 | | Gator® G3™, 15-3/4" |
| | 597-606 | | Gator G5™, 15-3/4" |
| **Replacement Parts** | | | |
| 2 | 82-243 | 92574 | Spindle Assembly |
| | 82-023 | 92574 | Spindle Assembly, Magnum, Heavy-Duty Version of Oregon® 82-243 |
| 3 | 65-208 | 92466 | Blade Adapter |
| 3A | 65-204 | 690411 | Blade Adapter |
| 4 | 34-822 | 91801 | Idler Pulley, Primary |
| | 78-055 | 690387MA | Idler Pulley, Primary |
| 4A | 78-021 | 423238 | Idler Pulley, Secondary |
| 5 | 44-331 | 94592 | Spindle Pulley |
| 6 | 75-129 | 37X89 | Deck Belt, Primary, 1/2" x 87-3/8" |
| 7 | 45-257 | 1001196 | Spindle Bearing |
| 8 | 85-028 | 94129 | Spindle Shaft |
| 8A | | 1001195 | Spindle Shaft |
| 9 | 45-243 | | Spindle Bearing |
| 10 | 45-242 | | Spindle Bearing |
| 11 | 72-094 | 92683 | Deck Wheel |
| 12 | | 310071 | Deck Roller |
| 13 | 75-094 | 37X66 | Deck Belt, Secondary, 1/2" x 47-5/16" |

## Toro TimeCutter with 42" Decks

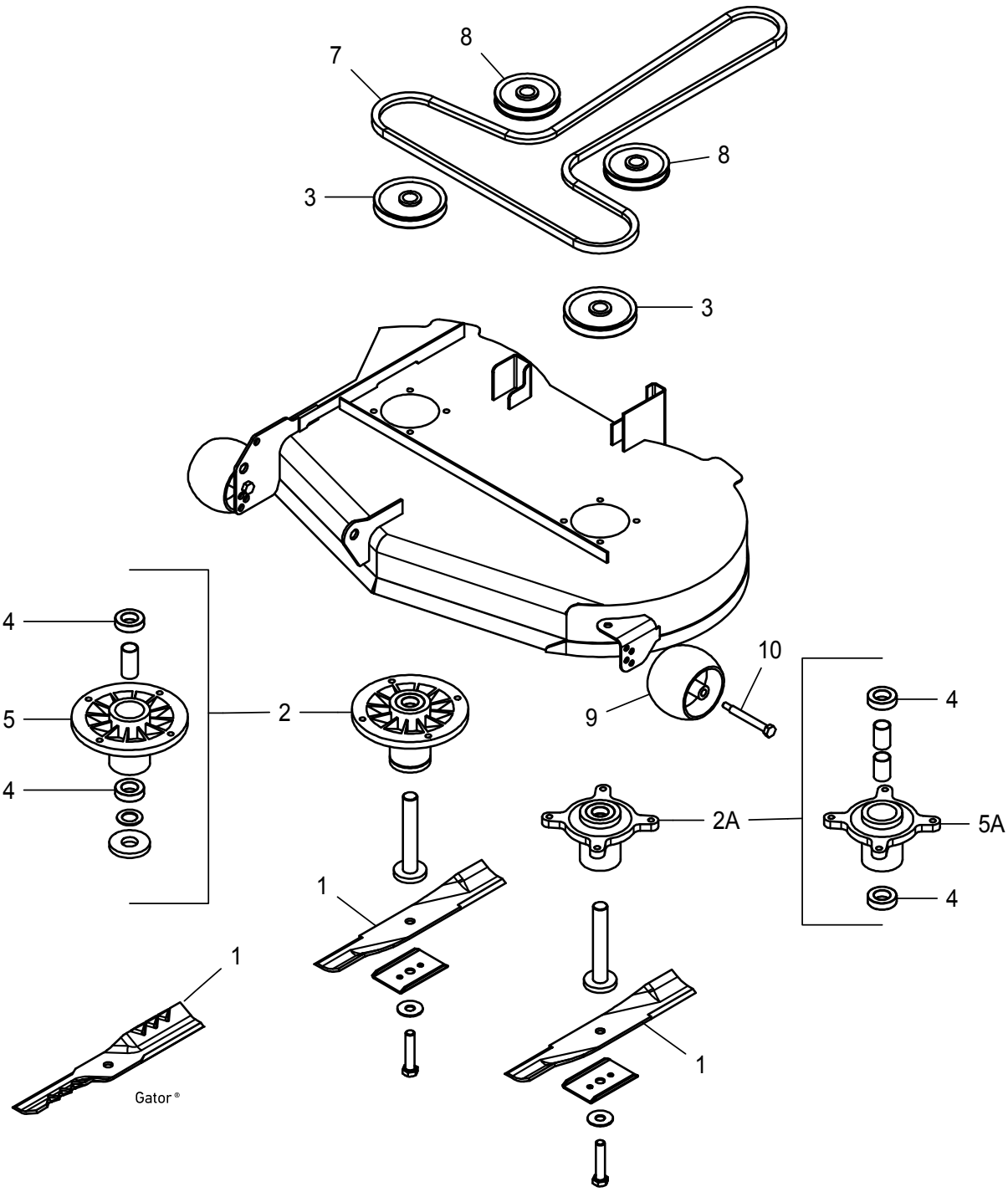

## Toro TimeCutter with 42" Decks

| № | Part No. | OEM No. | Description |
|---|---|---|---|
| **Blades for 42" Decks with 5/8" Round Center Hole** | | | |
| | 94-069 | 110-6568-03, 117-5372-03 | Standard-Lift, 21-9/16" |
| 1 | 94-068 | 106-2247-03 | Mulching, 21-9/16" |
| | 96-362 | | Gator® G3™, 21-9/16" |
| **Replacement Parts** | | | |
| 2 | | 107-9161 | Spindle Assembly, Z |
| 3 | | 125-5574, 110-6864 | Spindle Pulley |
| 4 | 45-257 | 100-1048 | Spindle Bearing, OD: 1.574" ID: 0.669" Width: 0.470" |
| 5 | | 88-4510 | Spindle Housing, Z |
| 6 | | 117-1192, 110-6866 | Spindle Shaft, Z |
| 2A | | 121-0751 | Spindle Assembly, SS & MX |
| 5A | | 117-7439, 117-7267 | Spindle Housing, SS & MX |
| 6A | | 117-7268 | Spindle Shaft, SS & MX |
| 7 | 115-145 | 110-6871 | Deck Primary Drive Belt, Z, 1/2" x 112-3/4" |
| 7 | 15-142 | 119-8819 | Deck Primary Drive Belt, SS & MX, 1/2" x 113-1/2" |
| 8 | | 106-2175 | Flat Idler |
| 9 | 72-311-1 | 1-603299, 68-2730 | Gauge Wheel, 5" x 2-3/4" |
| 10 | 72-163 | 126-2928 | Gauge Wheel, Bolt Kit |

## Toro Titans with 48" Decks

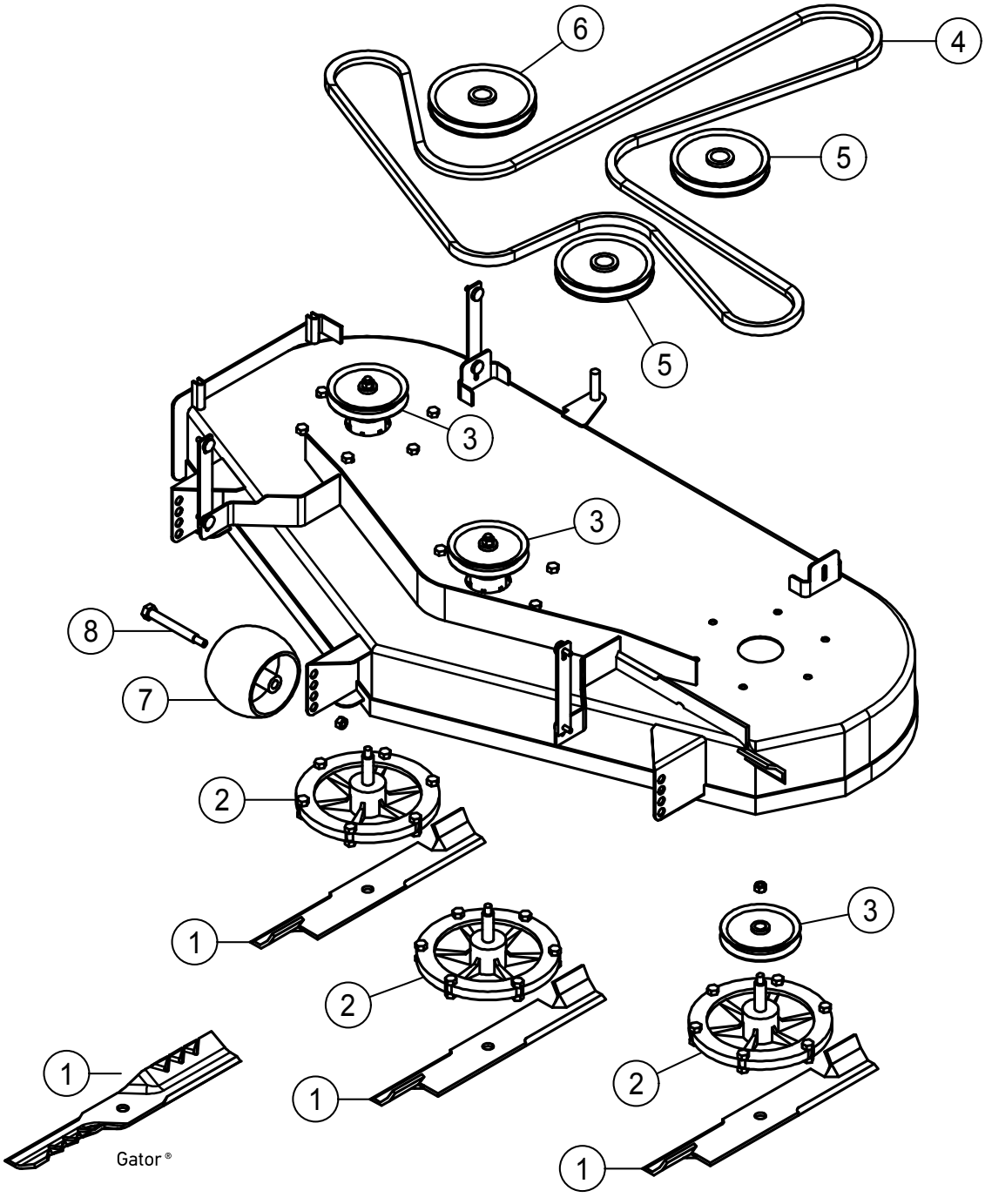

## Toro Titans with 48" Decks

| № | Part No. | OEM No. | Description |
|---|---|---|---|
| **Blades for 48" Decks with 15/16" Round Center Hole** | | | |
| 1 | 92-029 | 109-6872 | Standard-Lift, 16-1/4" |
| | 92-026 | | Mulching, 16-1/4" |
| | 96-321 | | Gator® G3™, 16-1/4" |
| | 596-321 | | Gator G5™, 16-1/4" |
| **Replacement Parts** | | | |
| 2 | | 121-5681, 109-6394 | Spindle Assembly |
| 3 | | 116-4875, 109-3747 | Spindle Pulley |
| 4 | 15-005 | 109-5364 | Deck Primary Drive Belt, 1/2" x 146-1/4" |
| 5 | | 109-8891, 109-3658 | Flat Idler |
| 6 | | 116-3626, 1-603843 | Flat Idler |
| 7 | | 109-6388 | Gauge Wheel |
| 8 | | 112-3977 | Gauge Wheel Bolt |

## Toro TimeCutters with 50" Decks

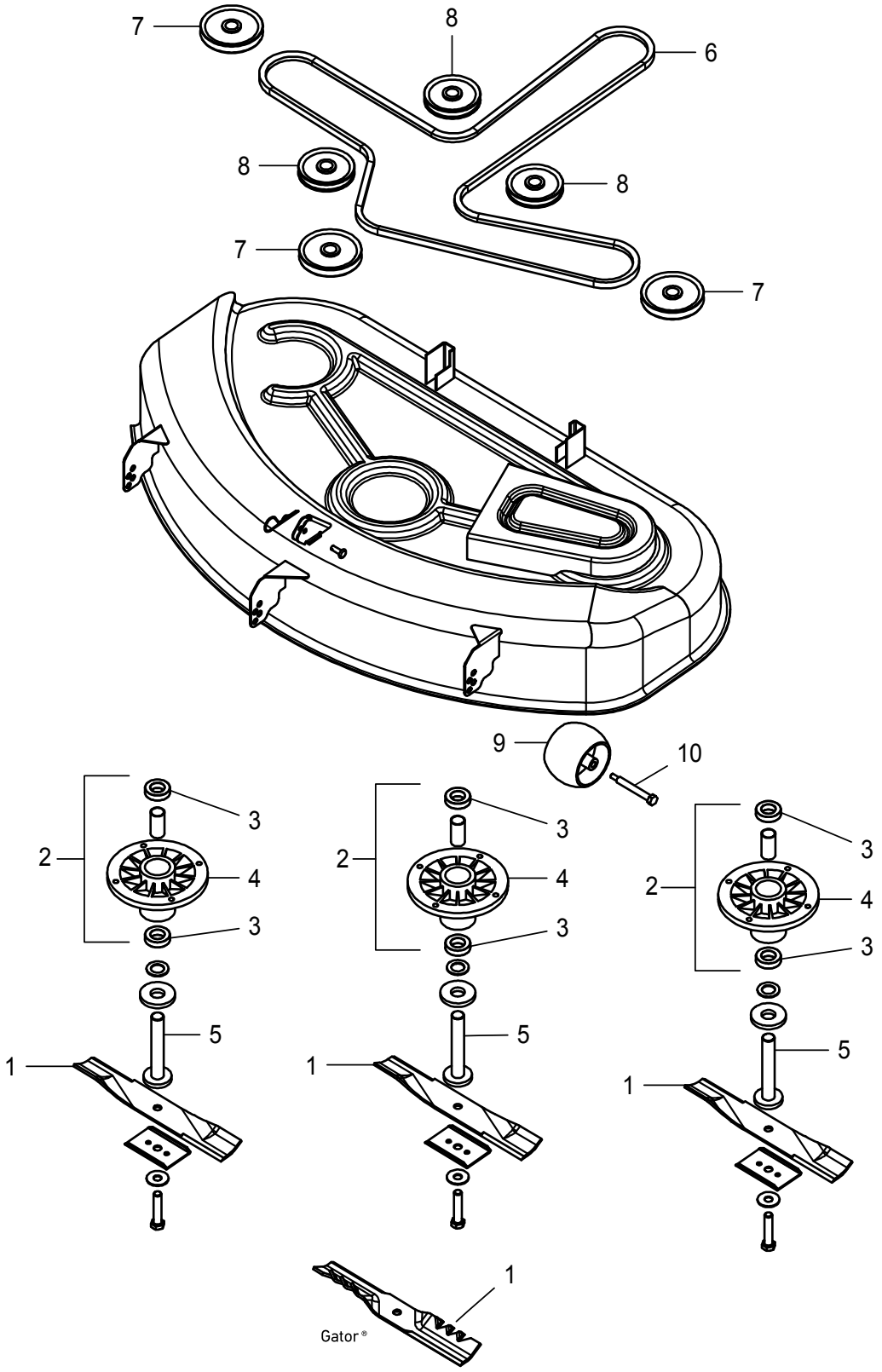

## Toro TimeCutters with 50" Decks

| № | Part No. | OEM No. | Description |
|---|---|---|---|
| **Blades for 50" Decks with 5/8" Round Center Holes** | | | |
| 1 | 94-063 | 112-9759-03 | Standard-Lift, 17-1/2" |
| | 96-382 | | Gator® G3™, 17-1/2" |
| **Replacement Parts** | | | |
| 2 | | 107-9161 | Spindle Assembly |
| 3 | 45-257 | 100-1048 | Spindle Bearing, OD: 1.574", ID: 0.669", Width: 0.470" |
| 4 | | 88-4510 | Spindle Housing |
| 5 | | 117-1192, 110-6866 | Spindle Shaft |
| 6 | | 110-6892 | Deck Primary Drive Belt |
| 7 | | 125-5575, 110-6865 | Spindle Pulley |
| 8 | | 106-2175 | Flat Idler |
| 9 | 72-311-1 | 1-603299, 68-2730 | Gauge Wheel 5" x 2-3/4" |
| 10 | 72-163 | 126-2928 | Gauge Wheel Bolt |

## Toro TimeCutters with 52" Decks

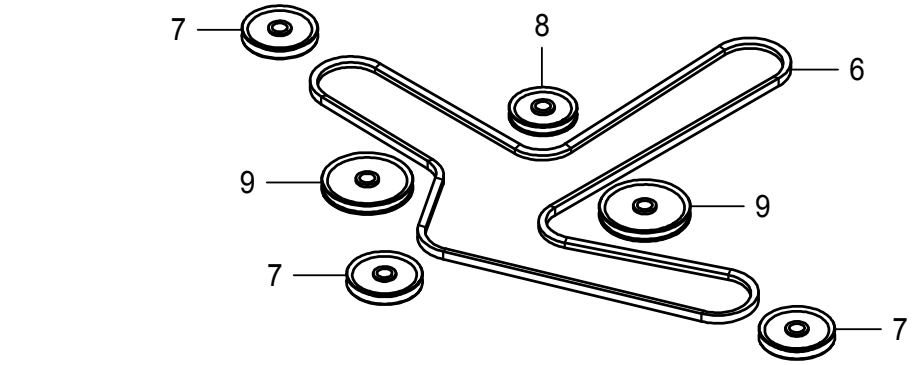


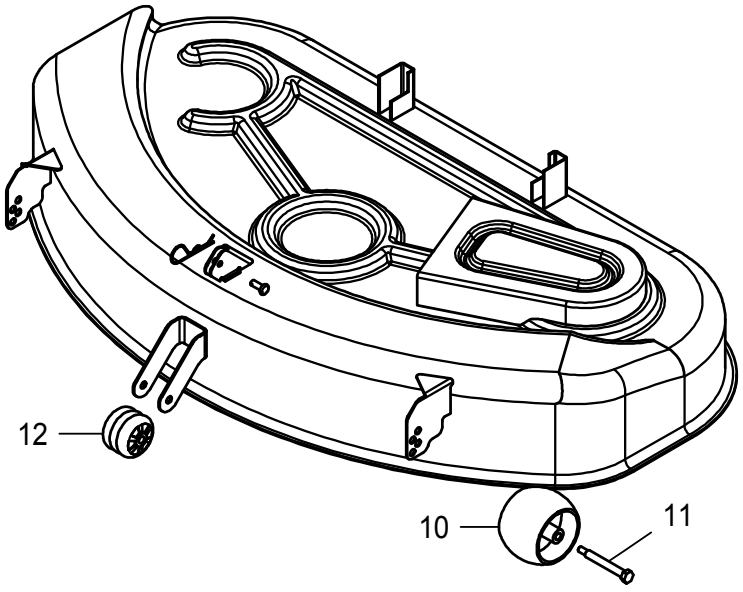


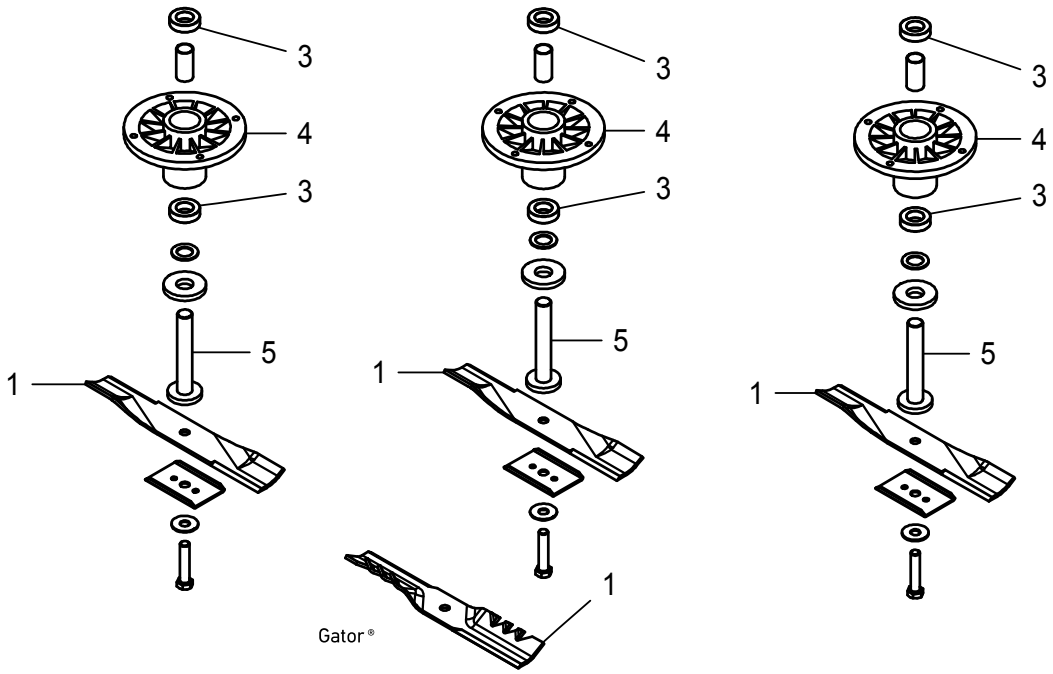

## Toro TimeCutters with 52" Decks

| № | Part No. | OEM No. | Description |
|---|---|---|---|
| **Blades for 52" Decks with 5/8" Round Center Holes** | | | |
| 1 | 94-064 | 107-1741-03 | Standard-Lift, 18" |
| | 96-395 | | Gator® G3™, 18" |
| **Replacement Parts** | | | |
| 3 | 45-257 | 100-1048 | Spindle Bearing, OD: 1.574", ID: 0.669", Width: 0.470" |
| 4 | | 107-1739 | Spindle Housing |
| 5 | | 80-4341 | Spindle Shaft |
| 6 | | 106-2217 | Deck Primary Drive Belt |
| 7 | | 107-1740 | Spindle Pulley |
| 8 | | 116-4669, 99-8912 | Flat Idler |
| 9 | 78-006 | 1-613098 | Flat Idler, Uses 2 |
| 10 | 72-311-1 | 1-603299, 68-2730 | Gauge Wheel, 5" x 2-3/4" |
| 11 | 72-163 | 126-2928 | Gauge Wheel Bolt |
| 12 | 72-029 | 29-4820 | Deck Roller, 2-3/4" x 3" |

## Bobcat 36", 48", 54", & 61" XM Series Walk-Behind Mowers

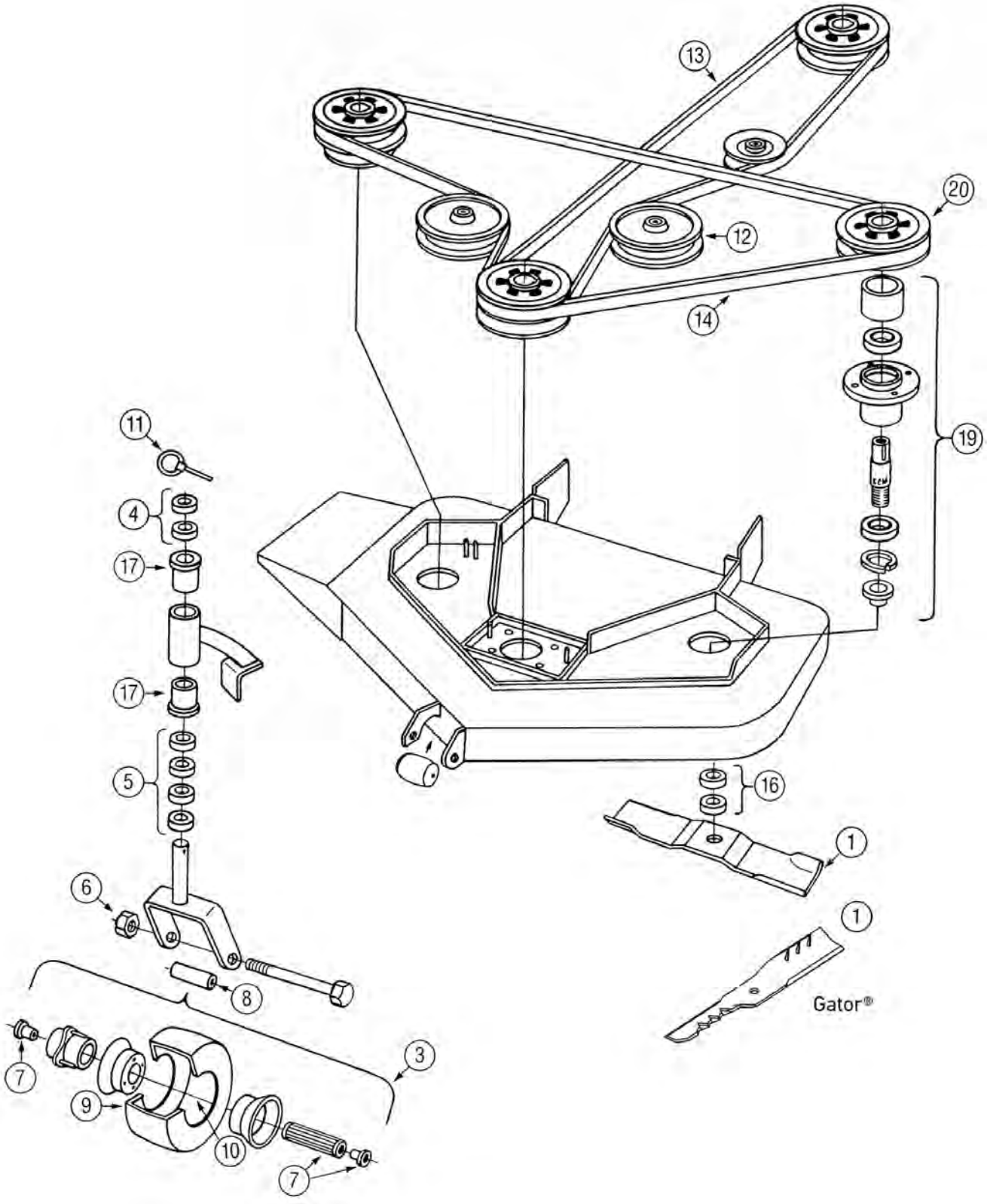

## Bobcat 36", 48", 54", & 61" XM Series Walk-Behind Mowers

| № | Part No. | OEM No. | Description |
|---|---|---|---|
| **Blades for 36" Decks with 5/8" Round Center Hole** | | | |
| 1 | 93-010 | 112111-02 | Standard Blade |
| | 93-601 | | Gator® G3™, 2 for 36" Deck |
| | 593-600 | | Gator G5™, 2 for 36" Deck, 3 for 54" Deck, 16-1/4" |
| **Blades for 48" Decks with 5/8" Round Center Hole** | | | |
| 1 | 93-009 | 112111-01 | Standard Blade |
| | 593-601 | | Gator G5, 3 for 48" Deck, 18" |
| **Blades for 54" Decks with 5/8" Round Center Hole** | | | |
| 1 | 93-010 | 112111-02 | Standard Blade |
| | 93-601 | | Gator G3, 2 for 36" Deck |
| | 593-600 | | Gator G5, 2 for 36" Deck, 3 for 54" Deck, 16-1/4" |
| **Blades for 61" Decks with 5/8" Round Center Hole** | | | |
| 1 | 93-011 | 112111-03 | Standard Blade |
| | 596-702 | | Gator G5, 3 for 61" Deck |
| | 396-702 | | Gator G6®, 3 for 61" Deck |
| **Replacement Parts** | | | |
| 3 | 72-795 | | Wheel Assembly |
| 4 | 09-808 | 64163-07 | Spacer, 1/4" x 1" |
| 5 | 09-803 | 64163-22 | Spacer, 1-3/4" x 1" |
| 6 | | 64151-12 | NLA |
| 7 | 45-121 | 38273/38274 | Bearing & Caps |
| 8 | 45-188 | 43180 | Spanner |
| 9 | 58-131 | 118123 | Tire, 9" x 350-4 |
| 10 | 71-109 | | Tube |
| 11 | 02-446 | 64173-04 | Linchpin, 7/16" |
| 12 | 78-111 | 38297 | Flanged Idler Pulley |
| 13 | | 38470 | Engine/Deck Belt, 36" |
| 14 | 75-180 | 38440 | Deck Drive Belt, 48", 5/8" x 85-1/4" |
| | 75-128 | 38389 | Deck Drive Belt, 36", 5/8" x 56-5/16" |
| 16 | 09-802 | 64163-14 | Spacer, 1/4" |
| 17 | 48-320 | 48053-2A | Bushing |
| 19 | 82-320 | 36567 | Spindle Assembly |
| 20 | 78-649 | 31012A | Spindle Pulley |

## Bunton 36" Walk-Behind Mower

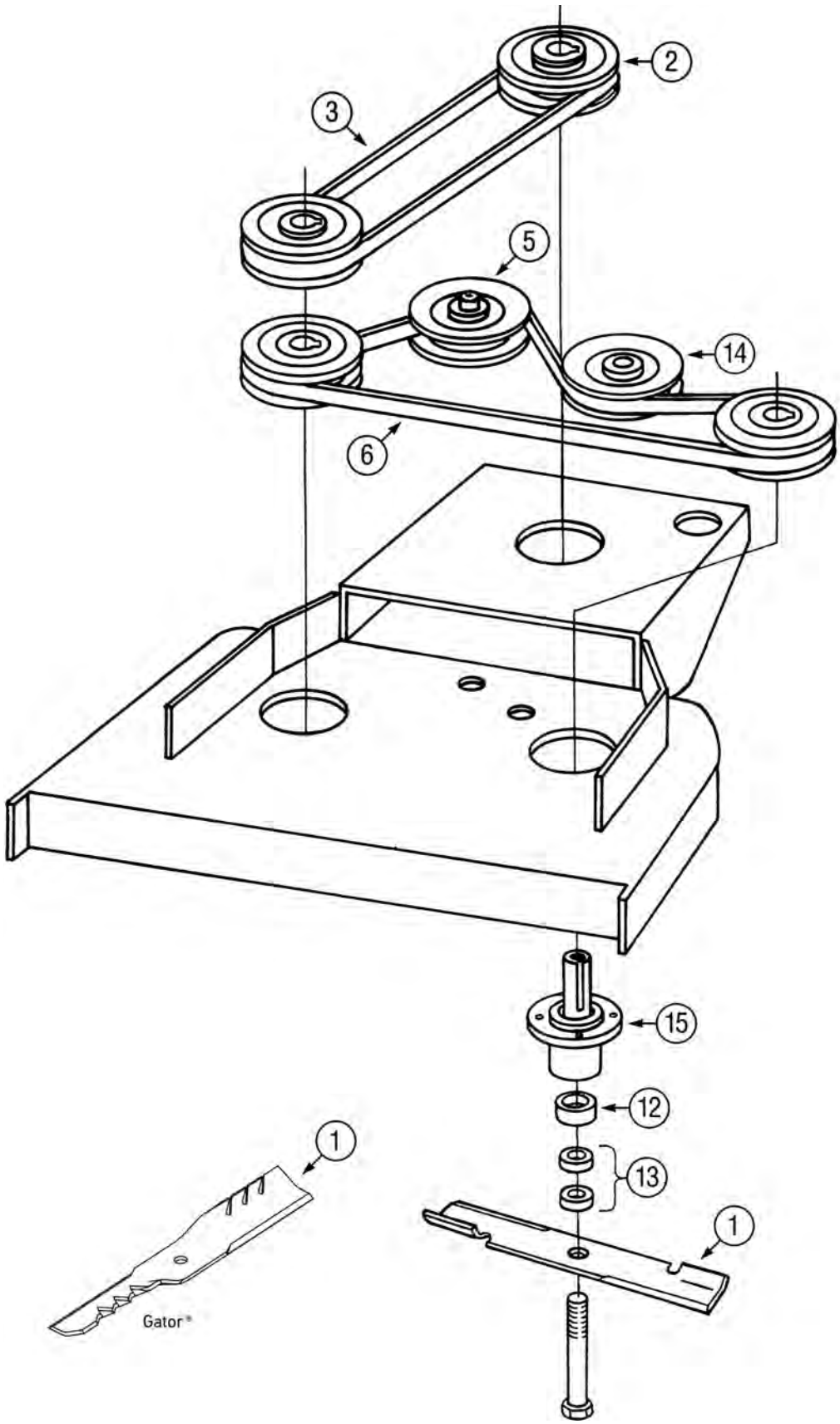

## Bunton 36" Walk-Behind Mower

| № | Part No. | OEM No. | Description |
|---|---|---|---|
| **Blades for 36" Decks with 5/8" Round Center Hole** | | | |
| | 91-637 | PL4206 | Standard, Notched-Lift, 18" |
| | 91-623 | PL4206 | High, Notched-Lift, 18" |
| 1 | 96-344 | | Gator® G3™, 18" |
| | 596-344 | | Gator G5™, 18" |
| | 396-726 | | Gator G6®, 18" |
| **Replacement Parts** | | | |
| 2 | 78-646 | PL1246 | Engine Pulley |
| 3 | 75-558 | PLO661 | Belt, for Engine-to-Deck, 5/8" x 58" |
| 5 | 78-121 | PL8540A | V-Pulley, Idler |
| 6 | 75-223 | PLO643 | Blade Belt, 1/2" x 50-3/8" |
| 13 | 09-802 | PLO617 | Spacer, 1/4" |
| 14 | 78-041 | PL0786 | Pulley, Idler |
| 15 | 82-308 | PAL0806 | Spindle Assembly |

## Bunton 48" & 52" Old Style "V" Decks

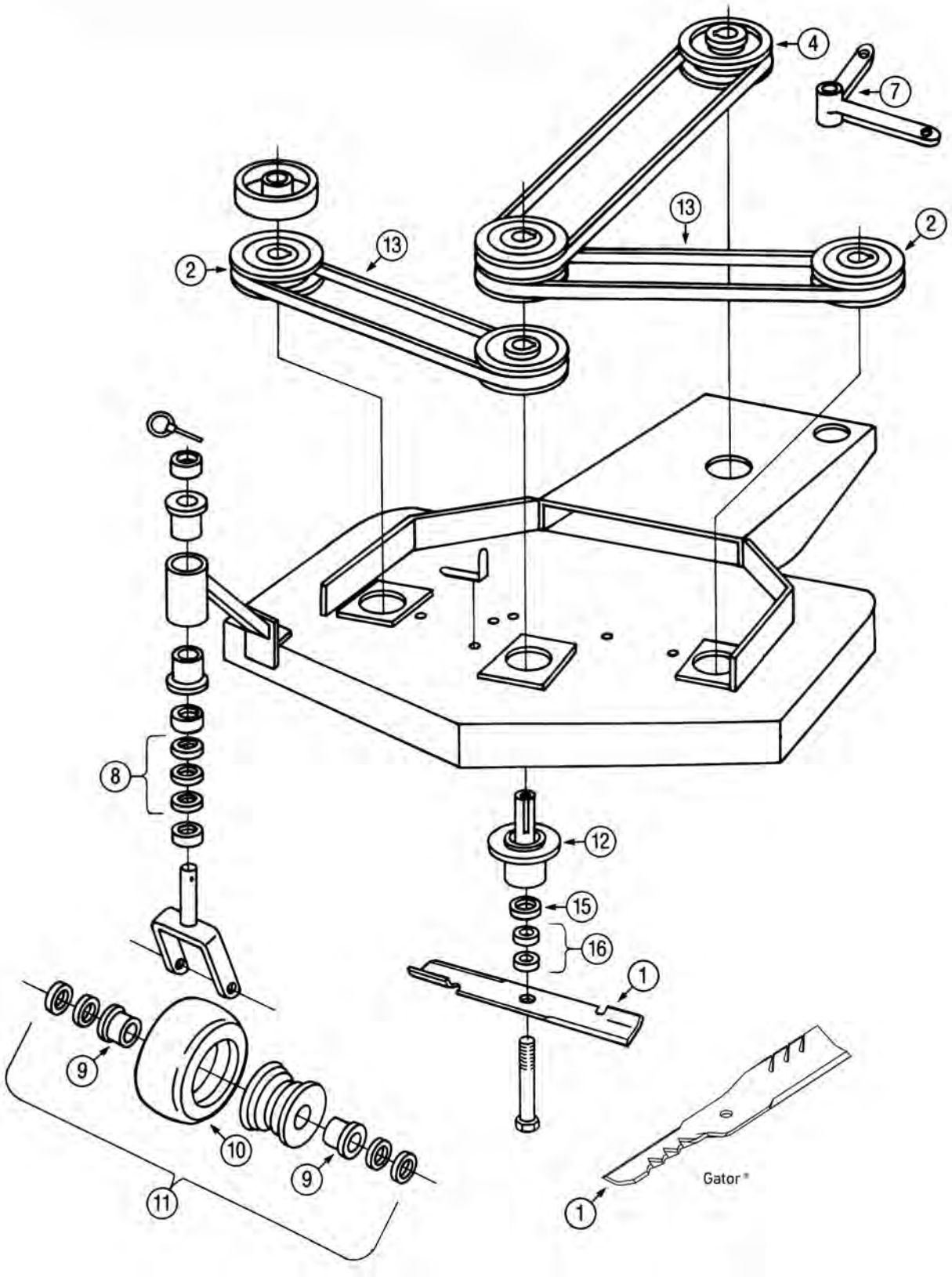

## Bunton 48" & 52" Old Style “V” Decks

| № | Part No. | OEM No. | Description |
|---|---|---|---|
| **Blades for 48" Decks with 5/8" Round Center Hole** | | | |
| | 91-620 | PL4205 | Standard-Lift, 16-1/2" |
| | 91-621 | | High-Lift, 16-1/2" |
| 1 | 96-308 | | Gator® G3™, 16-1/2" |
| | 596-308 | | Gator G5™, 16-1/2" |
| | 396-735 | | Gator G6®, 16-1/2" |
| **Blades for 52" Decks with 5/8" Round Center Hole** | | | |
| | 91-637 | PL4206 | Standard, Notched-Lift, 18" |
| | 91-623 | PL4206 | High, Notched-Lift, 18" |
| 1 | 96-344 | | Gator G3, 18" |
| | 596-344 | | Gator G5, 18" |
| | 396-726 | | Gator G6, 18" |
| **Replacement Parts** | | | |
| 2 | 78-644 | PL0622 | Pulley |
| 4 | 78-646 | PL1246 | Engine Pulley |
| 8 | 09-804 | PJH1054 | Caster Spacer, 1/2" |
| 9 | 45-010 | PLO941 | Bearing |
| 10 | 58-133 | PLO959A | Tire, 410/350-5 |
| 11 | | PALO942A | Wheel Assembly |
| 12 | 82-308 | PALO8060 | Spindle Assembly |
| 13 | 75-446 | PL4813 | Blade Belt, 1/2" x 46" |
| 16 | 09-802 | PLO617 | Blade Spacer, 1/4" |

## Bunton 48" & 52" Hydro & Belt Drive Walk-Behind Mower

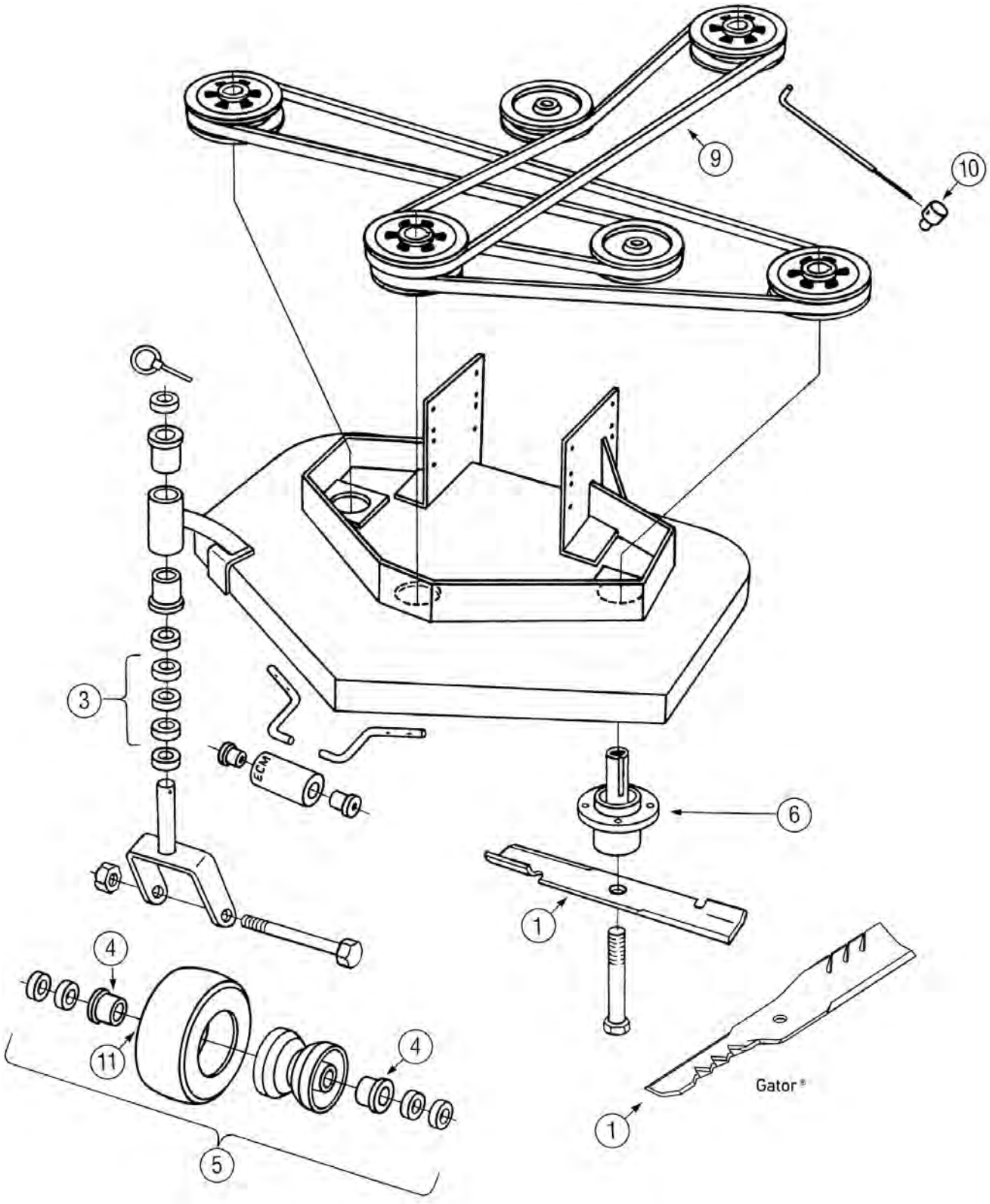

## Bunton 48" & 52" Hydro & Belt Drive Walk-Behind Mower

| № | Part No. | OEM No. | Description |
|---|---|---|---|
| **Blades for 48" Decks with 5/8" Round Center Hole** | | | |
| | 91-620 | PL4205 | Standard-Lift, 16-1/2" |
| | 91-621 | | High-Lift, 16-1/2" |
| 1 | 96-308 | | Gator® G3™, 16-1/2" |
| | 596-308 | | Gator G5™, 16-1/2" |
| | 396-735 | | Gator G6®, 16-1/2" |
| **Blades for 52" Decks with 5/8" Round Center Hole** | | | |
| | 91-637 | PL4206 | Standard, Notched-Lift, 18" |
| | 91-623 | PL4206 | High, Notched-Lift, 18" |
| 1 | 96-344 | | Gator G3, 18" |
| | 596-344 | | Gator G5, 18" |
| | 396-726 | | Gator G6, 18" |
| **Replacement Parts** | | | |
| 3 | 09-804 | PJH1054 | Caster Spacer, 1/2" |
| 4 | 45-010 | PLO941 | Bearing |
| 5 | | PAL0942A | Wheel Assembly |
| 6 | 82-308 | PALO806A | Spindle Assembly |
| 9 | 75-563 | PL4732 | Deck Belt, for 48" Cut Engine-to-Deck, 5/8" x 63" |
| | 75-565 | PL4739 | Deck Belt, for 52" Cut Engine-to-Deck, 5/8" x 65" |
| 10 | | PLO355 | Swivel |
| 11 | 58-133 | PLO958 | Tire, 410/350-5 |

## Dixie Chopper 42" thru 74" Deck Mower

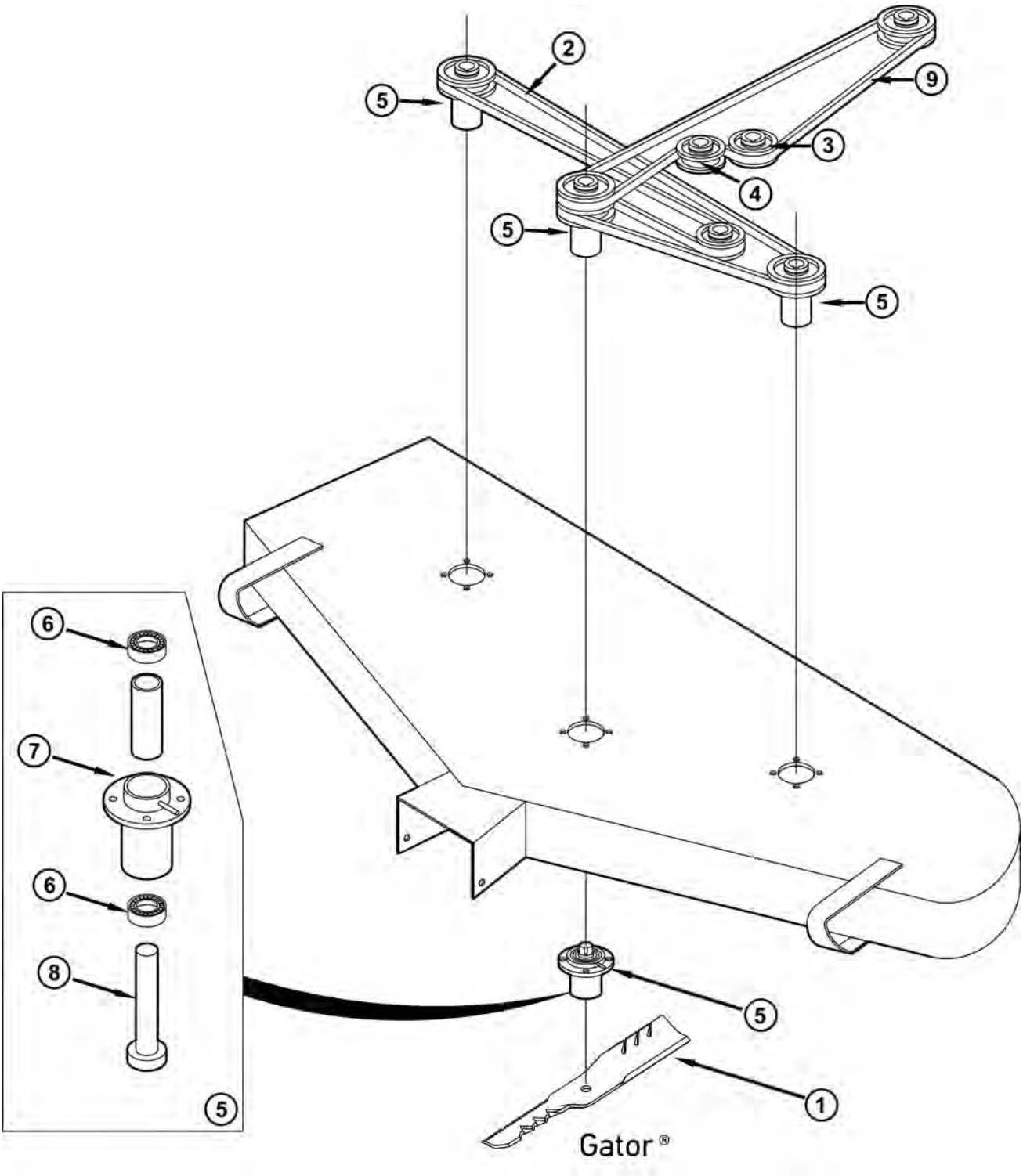

## Dixie Chopper 42" thru 74" Deck Mower

| № | Part No. | OEM No. | Description |
|---|---|---|---|
| **Blades for 42" Decks with 5/8" Round Center Hole** | | | |
| 1 | 91-501 | 30227-42 | Standard-Lift, 14-1/2" |
| | 396-714 | | Gator® G6®, 14-1/2" |
| **Blades for 50" Decks with 5/8" Round Center Hole** | | | |
| 1 | 91-502 | 30227-50 | Standard, 17" |
| | 91-508 | 30227-50H | Standard, High-Lift 17" |
| | 91-505 | 30227-50V | High, Notched-Lift 17" |
| | 91-525 | 30227-50X | Standard, 17" |
| | 596-323 | | Gator G5™, 17" |
| | 396-723 | | Gator G6, 17" |
| **Blades for 60" Decks with 5/8" Round Center Hole** | | | |
| 1 | 91-503 | 30227-60 | Standard, 20-1/2" |
| | 91-509 | 30227-60H | Standard, High-Lift, 20-1/2" |
| | 91-506 | 30227-60V | High, Notched-Lift, 20-1/2" |
| | 90-109 | 30227-60N | High-Lift, Heavy-Duty, 20-1/2" |
| | 91-527 | 30227-60X | X-Style, 20-1/2" |
| | 96-319 | | Gator G3™, 20-1/2" |
| | 596-319 | | Gator G5, 20-1/2" |
| | 396-740 | | Gator G6, 20-1/2" |
| **Blades for 66" Decks with 5/8" Round Center Hole** | | | |
| 1 | 91-528 | 30227-66X | X-Style, 23-5/16" |
| | 396-524 | | Gator G6, 23-5/16" |
| **Blades for 72" Decks with 5/8" Round Center Hole** | | | |
| 1 | 91-507 | 30227-72H | Standard, High-Lift, 24" |
| | 91-515 | 30227-72N | High-Lift, Heavy-Duty, 24" |
| | 596-752 | | Gator G5, 24" |
| | 396-752 | | Gator G6, 24" |
| **Blades for 74" Decks with 5/8" Round Center Hole** | | | |
| 1 | 91-526 | 30227-74X | X-Style, Excalibur, 26" |
| | 391-526 | | Gator G6, 26" |
| **Replacement Parts** | | | |
| 2 | 75-283 | 30203 | Deck Drive Belt, for 50", 5/8" x 104-3/4" |
| | 75-211 | 30236-0 | Deck Drive Belt, for 60", 5/8" x 128-5/16" |
| 3 | 78-010 | 30234 | V-Idler Pulley, for 42", 50", & 60" |
| 4 | 78-009 | 30224 | Flat Idler Pulley, for 42", 50", & 60" |
| 5 | 82-323 | 10161-L | Center Spindle Assembly, for 42", 50", & 60" |
| | 82-322 | 10161 | OutSide Spindle Assembly, for 42", 50", & 60" |
| 6 | 45-263 | 30218 | Bearing |
| 7 | | 30241 | Spindle Housing, for 42", 50", & 60" |
| 8 | | 30217L | Spindle Shaft, for 42", 50", & 60" |
| | | 30217 | Spindle Shaft, for 42", 50", & 60" |
| 9 | 75-208 | 30204 | Engine-to-Deck Belt, for 50", 5/8" x 81-1/16" |
| | 75-199 | 65080 | Engine-to-Deck Belt, for 60", 5/8" x 83-1/8" |

## Encore Prowler 52" & 61" Deck Mowers

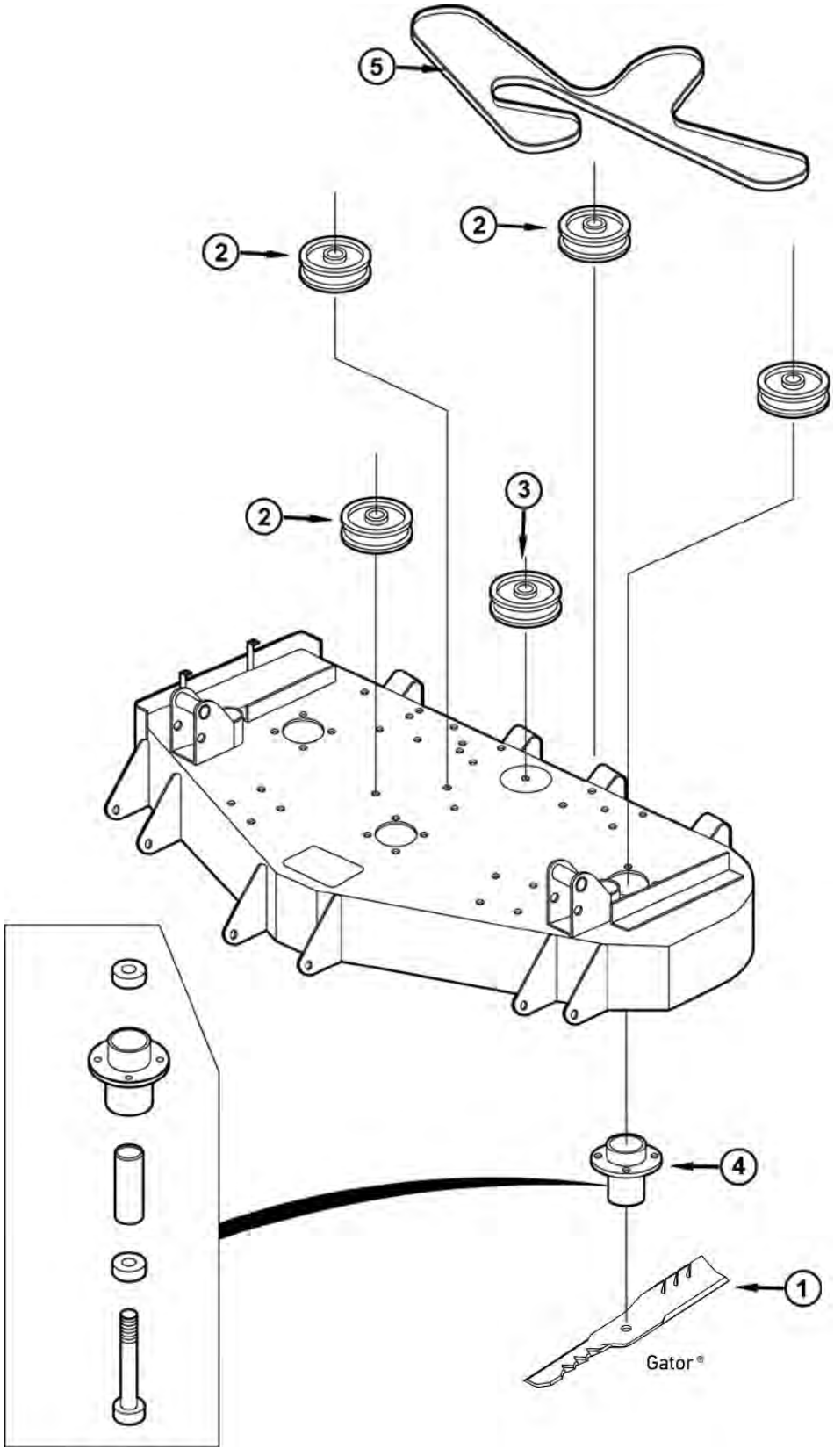

## Encore Prowler 52" & 61" Deck Mowers

| № | Part No. | OEM No. | Description |
|---|---|---|---|
| **Blades for 52" Decks with 5/8" Round Center Hole** | | | |
| 1 | 91-622 | 363291 | Standard-Lift, 18" |
| | 96-344 | | Gator® G3™, 18" |
| | 596-344 | | Gator G5™, 18" |
| | 396-726 | | Gator G6®, 18" |
| **Blades for 61" Decks with 5/8" Round Center Hole** | | | |
| 1 | 91-135 | 823006 | Standard-Lift, 21" |
| | 596-702 | | Gator G5, 21" |
| | 396-702 | | Gator G6, 21" |
| **Replacement Parts** | | | |
| 2 | | 523329 | Flat Idler Pulley, for 52" & 61" |
| 3 | 78-642 | 363216 | Taper Lock Pulley, for 52" |
| 4 | | 583106 | Spindle Assembly, for 52" & 61" |
| 5 | | 823243 | Deck Belt, for 52" & 61" |

## Encore 36", 48", 52", & 60" Walk-Behind Mowers

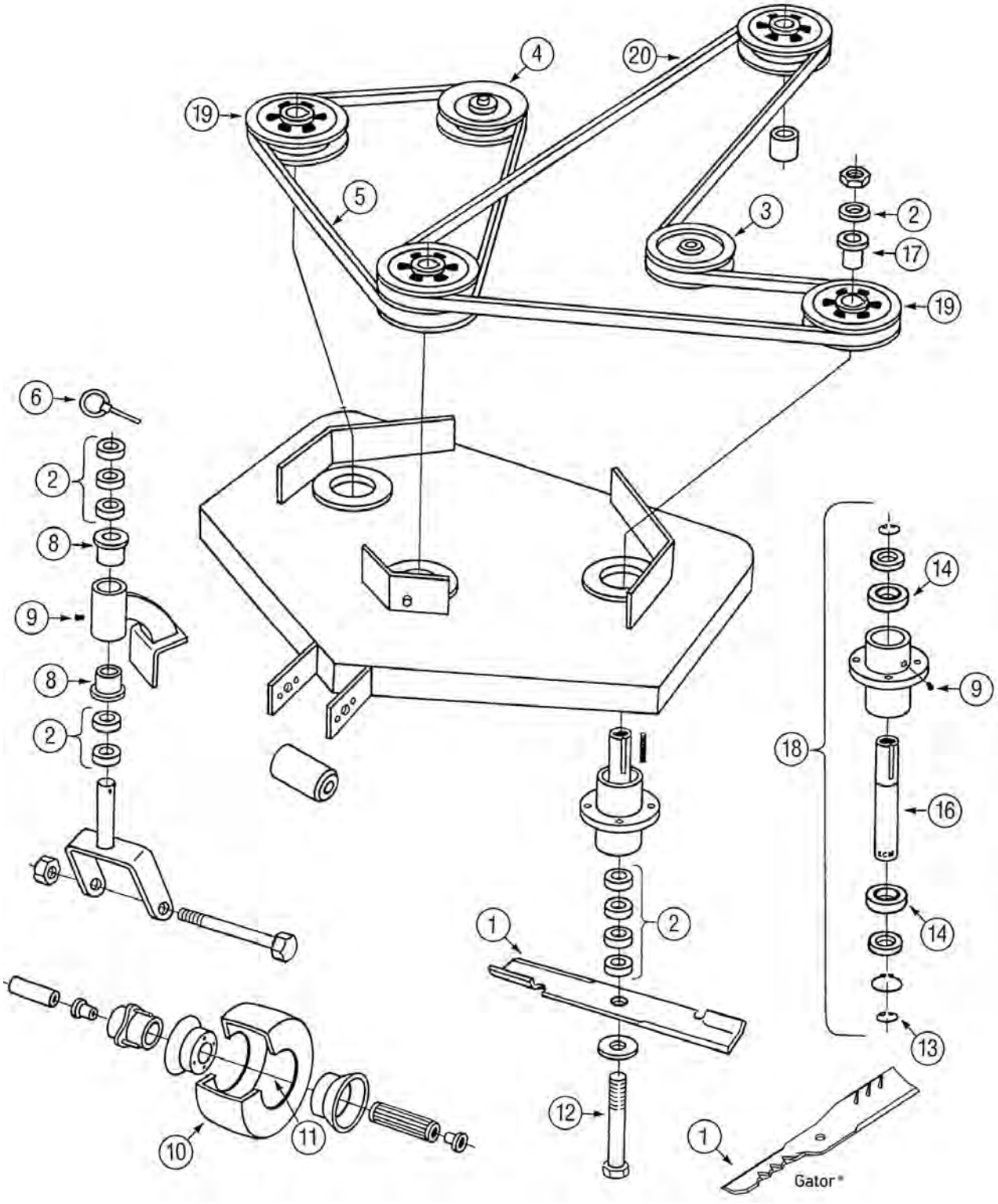

## Encore 36", 48", 52", & 60" Walk-Behind Mowers

| № | Part No. | OEM No. | Description |
|---|---|---|---|
| **Blades for 36" Decks with 5/8" Round Center Hole** | | | |
| 1 | 91-622 | 363291 | Standard-Lift, 18" |
| | 96-344 | | Gator® G3™, 18" |
| | 596-344 | | Gator G5™, 18" |
| | 396-726 | | Gator G6®, 18" |
| **Blades for 48" Decks with 5/8" Round Center Hole** | | | |
| 1 | 91-266 | 483035 | Standard-Lift, 16-3/8" |
| | 96-328 | | Gator G3, 16-3/8" |
| **Blades for 52" Decks with 5/8" Round Center Hole** | | | |
| 1 | 91-622 | 363291 | Standard-Lift, 18" |
| | 96-344 | | Gator G3, 18" |
| | 596-344 | | Gator G5, 18" |
| | 396-726 | | Gator G6, 18" |
| **Blades for 60" Decks with 5/8" Round Center Hole** | | | |
| 1 | 91-259 | 603035 | Standard-Lift, 20-1/4" |
| | 591-259 | | Gator G5, 20-1/4" |
| **Replacement Parts** | | | |
| 2 | 48-141 | 363170 | Spacer, 1/4" |
| 3 | 78-300 | 363264 | Idler Pulley |
| 4 | 78-121 | 483025 | Idler Pulley, V-Groove |
| 5 | 75-552 | | Blade Belt, for Right-Hand, 52", 5/8" x 52" |
| 6 | 02-446 | | Lynch Pin, 7/16" |
| 8 | 48-320 | | Caster Support Arm Bushing |
| 9 | 02-010-1 | | Grease Fitting |
| 10 | 58-132 | | Tire, Smooth, 410/350-4 |
| 11 | 71-274 | | Tube |
| 12 | 04-125 | | Blade Bolt |
| 14 | 45-220 | 363146 | Bearing, Heavy-Duty |
| 16 | 82-305 | 363058 | Spindle Shaft |
| 17 | | 363127 | Pulley Bushing |
| 18 | | 362044 | Spindle Assembly |
| 19 | 78-642 | 363216 | Pulley |
| 20 | 75-031 | 483030 | Engine/Deck Belt, for 48" Deck, 5/8" x 88-1/4" |
| | 75-582 | 363210 | Engine/Deck Belt, for 36" Deck, 5/8" x 82" |

## Exmark 36", 48", & 52" Viking Deck Parts

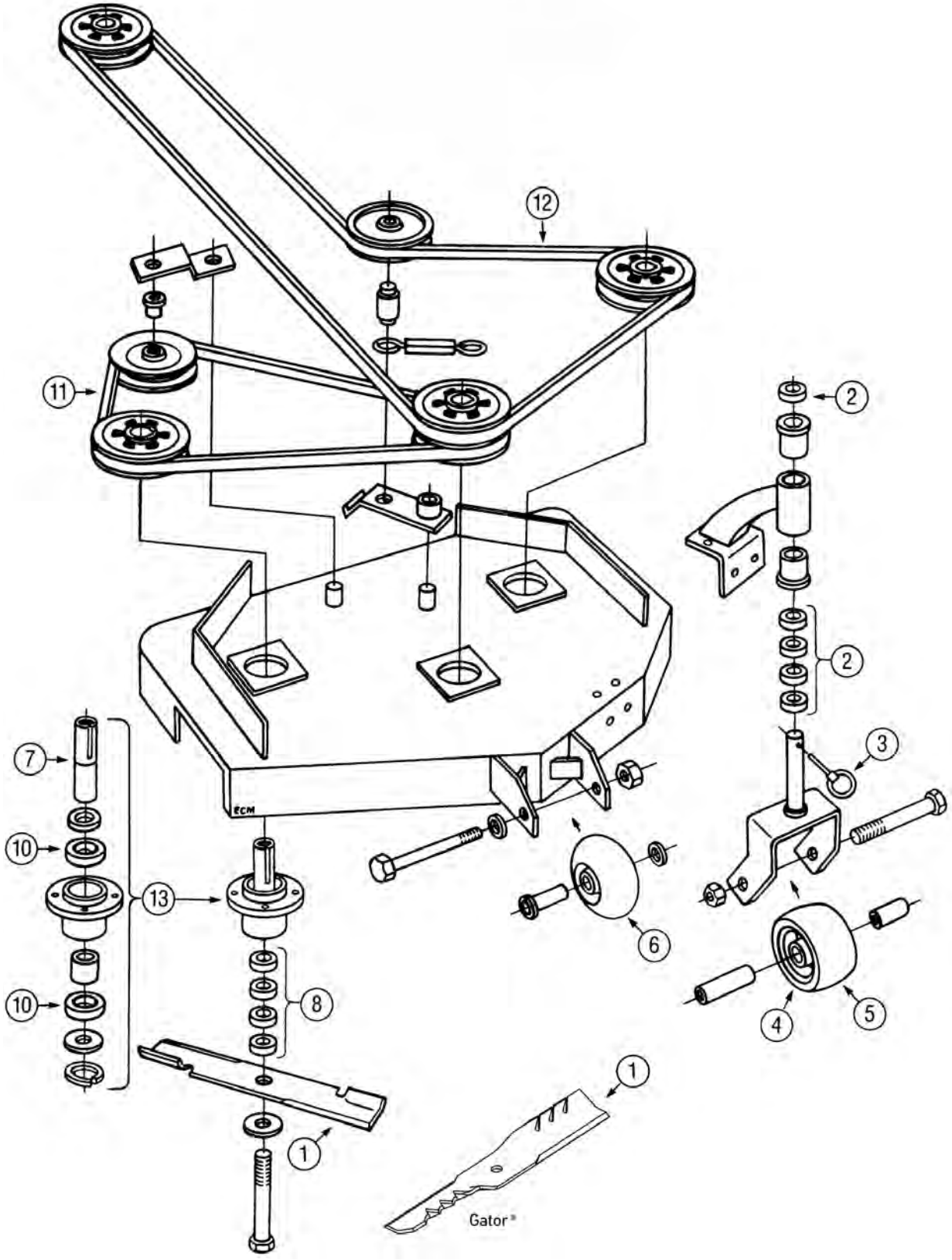

## Exmark 36", 48", & 52" Viking Deck Parts

| № | Part No. | OEM No. | Description |
|---|---|---|---|
| **Blades for 36" Decks with 5/8" Round Center Hole** | | | |
| 1 | 91-181 | 103-2508-03 | Standard-Notch Lift, 18" |
| | 91-184 | 103-2508-03 | Standard-Notch Lift, Heavy-Duty, 18" |
| | 91-335 | 103-2518-03 | Mulching, 18" |
| | 96-344 | | Gator® G3™, 18" |
| | 596-344 | | Gator G5™, 18" |
| | 396-726 | | Gator G6®, 18" |
| **Blades for 48" Decks with 5/8" Round Center Hole** | | | |
| 1 | 91-313 | 103-6583-03, 323515 | Standard-Notch Lift, 16-1/4" |
| | 91-183 | | Standard-Notch Lift, Heavy-Duty, 16-1/4" |
| | 99-127 | 103-1577-03 | Standard Rolled Lift, 16-1/4" |
| | 91-368 | 103-6581-03 | Mulching, 16-1/4" |
| | 96-310 | | Gator G3, 16-1/4" |
| | 596-310 | | Gator G5, 16-1/4" |
| | 396-716 | | Gator G6, 16-1/4" |
| **Blades for 52" Decks with 5/8 " Round Center Hole** | | | |
| 1 | 91-181 | 103-2508-03 | Standard-Notch Lift 18" |
| | 91-184 | 103-2508-03 | Standard-Notch Lift, Heavy-Duty, 18" |
| | 91-335 | 103-2518-03 | Mulching, 18" |
| | 96-344 | | Gator G3, 18" |
| | 596-344 | | Gator G5, 18" |
| | 396-726 | | Gator G6, 18" |
| **Replacement Parts** | | | |
| 2 | 09-804 | 303314 | Spacer, 1/2" Caster Yoke |
| 3 | 02-446 | | Linchpin, 7/16" |
| 5 | 58-131 | 513808 | Tire, Slick, 9" x 350-4 |
| 6 | 72-311-1 | 603299 | Roller, Anti-Scalp |
| 7 | | 322164 | Spindle Shaft, Side LH & RH Spindle |
| 8 | 09-802 | 303164 | Spacer, 1/4" |
| 9 | 45-030 | 303044 | Bearing |
| 10 | 45-220 | 303057 | Bearing, Heavy-Duty |
| 11 | 75-552 | 403025 | Blade Belt, for 48" Cut, 5/8" x 52" |
| | 75-048 | | Blade Belt, for 52" Cut, 5/8" x 56-1/8" |
| 12 | 75-181 | 303499 | Engine-to-Deck Belt, for 48" Cut, 5/8" x 56-1/8" |
| 13 | 82-306 | 302030 | Spindle Assembly, Side LH & RH Spindle |
| | 82-307-0 | 402006 | Spindle Assembly, Center |

## Exmark Lazer Z & Turf Tracer 52", 60", & 72" Deck Mowers

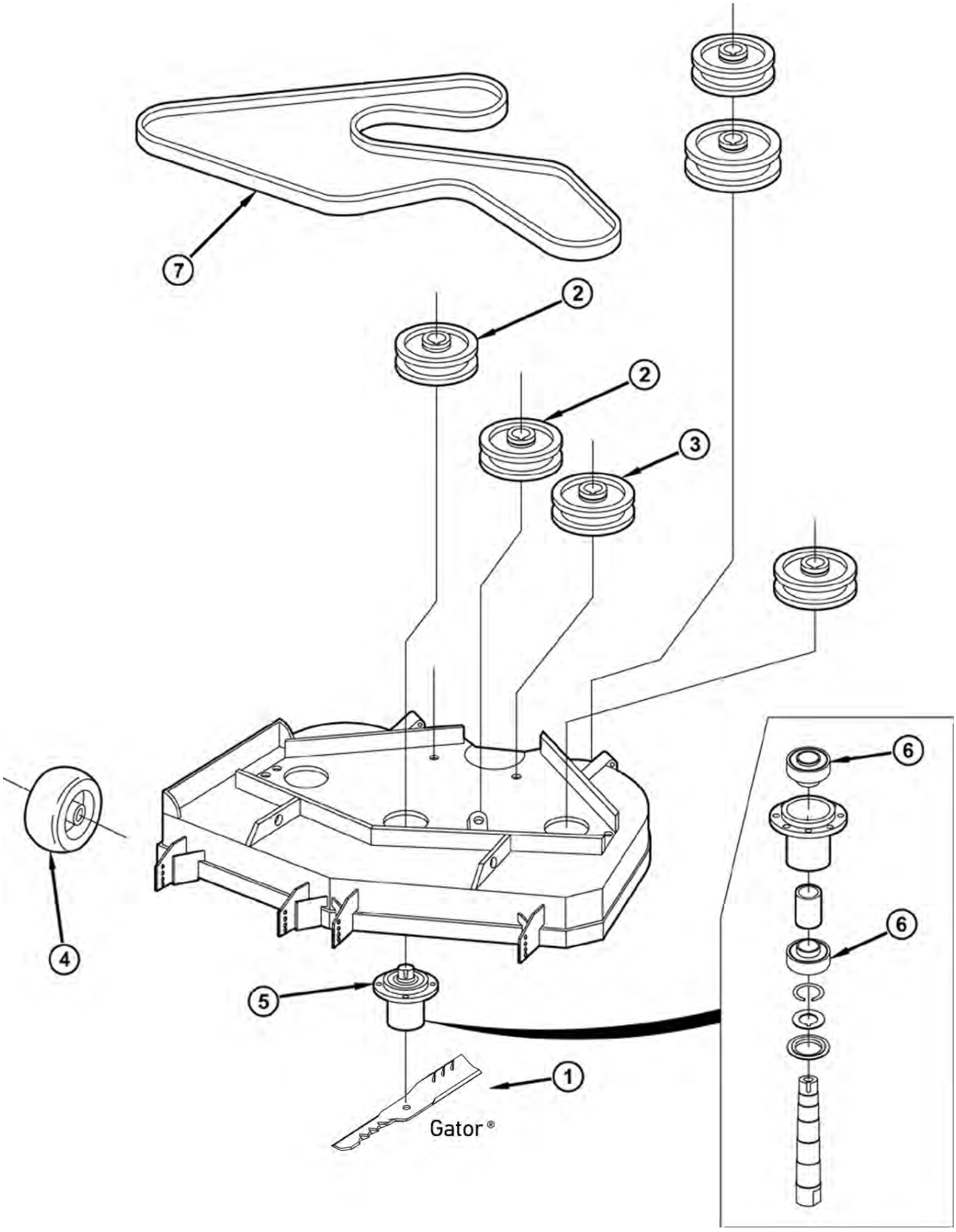

## Exmark Lazer Z & Turf Tracer 52", 60", & 72" Deck Mowers

| № | Part No. | OEM No. | Description |
|---|---|---|---|
| **Blades for 52" Decks with 5/8" Round Center Hole** | | | |
| | 91-312 | 633482 | Standard-Lift, 18" |
| | 91-335 | 633484 | Mulching, 18" |
| 1 | 96-344 | | Gator® G3™, 18" |
| | 596-344 | | Gator G5™, 18" |
| | 396-726 | | Gator G6®, 18" |
| **Blades for 52" Decks with 15/16" Round Center Hole** | | | |
| | 92-030 | 103-6402-03 | Standard-Lift, 18" |
| | 92-027 | 103-6392-03 | Mulching, 18" |
| 1 | 96-322 | | Gator G3, 18" |
| | 596-322 | | Gator G5, 18" |
| | 396-322 | | Gator G6, 18" |
| **Blades for 60" Decks with 5/8" Round Center Hole** | | | |
| | 91-378 | 633483 | Low-Lift, 20-1/2" |
| | | 103-1580 | Bahia Blade, 20-1/2" |
| | 91-264 | 613112 | Standard-Notch Lift, 20-1/2" |
| | 91-506 | 103-2530 | High-Notch Lift, 20-1/2" |
| 1 | | 103-0301-03 | Mulching, 20-1/2" |
| | 96-319 | | Gator G3, 20-1/2" |
| | 596-319 | | Gator G5, 20-1/2" |
| | 396-740 | | Gator G6, 20-1/2" |
| **Blades for 60" Decks with 15/16 " Round Center Hole** | | | |
| | 92-025 | 103-6383 | Bahia Blade, 20-1/2" |
| | 92-209 | | Standard-Notch Lift, 20-1/2" |
| | 92-028 | 103-6393 | Mulching, 20-1/2" |
| 1 | 92-031 | 103-6398 | High-Notch Lift, 20-1/2" |
| | 96-749 | | Gator G3, 20-1/2" |
| | 596-749 | | Gator G5, 20-1/2" |
| | 392-025 | | Gator G6, 20-1/2" |
| **Blades for 60" Triton Decks with 15/16 " Round Center Hole** | | | |
| | 492-730 | 103-8396 | Notch-Lift, Triton Decks, 20-3/4" |
| 1 | | | Gator G3, Triton Decks, 20-3/4" |
| | 392-201 | | Gator G6, Triton Decks, 20-3/4" |
| **Blades for 66" Triton Decks with 15/16" Round Center Hole** | | | |
| 1 | 492-732 | 109-6464-03 | Notch-Lift, Triton Decks, 22-11/16" |
| | 392-203 | | Gator G6, Triton Deck, 22-11/16" |
| **Blades for 72" Decks with 5/8" Round Center Hole** | | | |
| 1 | 91-374 | 1-643006 | High-Lift, 24-3/8" |
| | 96-699 | | Gator G3, 24-3/8" |
| **Blades for 72" Decks with 15/16" Round Center Hole** | | | |
| | 92-057 | | Standard-Lift, 24-1/2" |
| 1 | 92-084 | | Mulching, 24-1/2" |
| | 392-057 | | Gator G6, 24-1/2" |
| **Blades for 72" Triton Decks with 15/16 " Round Center Hole** | | | |
| 1 | | 109-6465-03 | Notch Lift, Triton Decks, 24-5/8" |
| | 392-204 | | Gator G6, Triton Decks, 24-5/8" |
| **Replacement Parts** | | | |
| 2 | 78-011 | 633109 | Flat Idler Pulley |
| 3 | 78-005 | 603805 | V-Idler Pulley |
| 4 | 72-311-1 | 603299 | Anti-Scalp Wheel |
| | 82-318 | 634972 | Spindle Assembly, Old Style, for 52", 60", & 72" |
| 5 | 82-344 | 103-1140 | Spindle Assembly, New Style, for 52" & 60" |
| | 82-349 | 644092 | Spindle Assembly, New Style, for 72" |
| 6 | 45-220 | 303543 | Spindle Bearing |
| | 75-188 | 633173 | Deck Drive Belt, for 52", 60", & 72", 5/8" x 111-1/4" |
| 7 | 75-960 | 633366 | Deck Belt, for 52", 5/8" x 128-13/16" |
| | 75-186 | 633127 | Deck Belt, for 60", 5/8" x 146-1/8" |
| | 75-967 | 643052 | Deck Belt, for 72", 5/8" x 169-1/2" |

## Ferris 48", 52", 61", & 72"

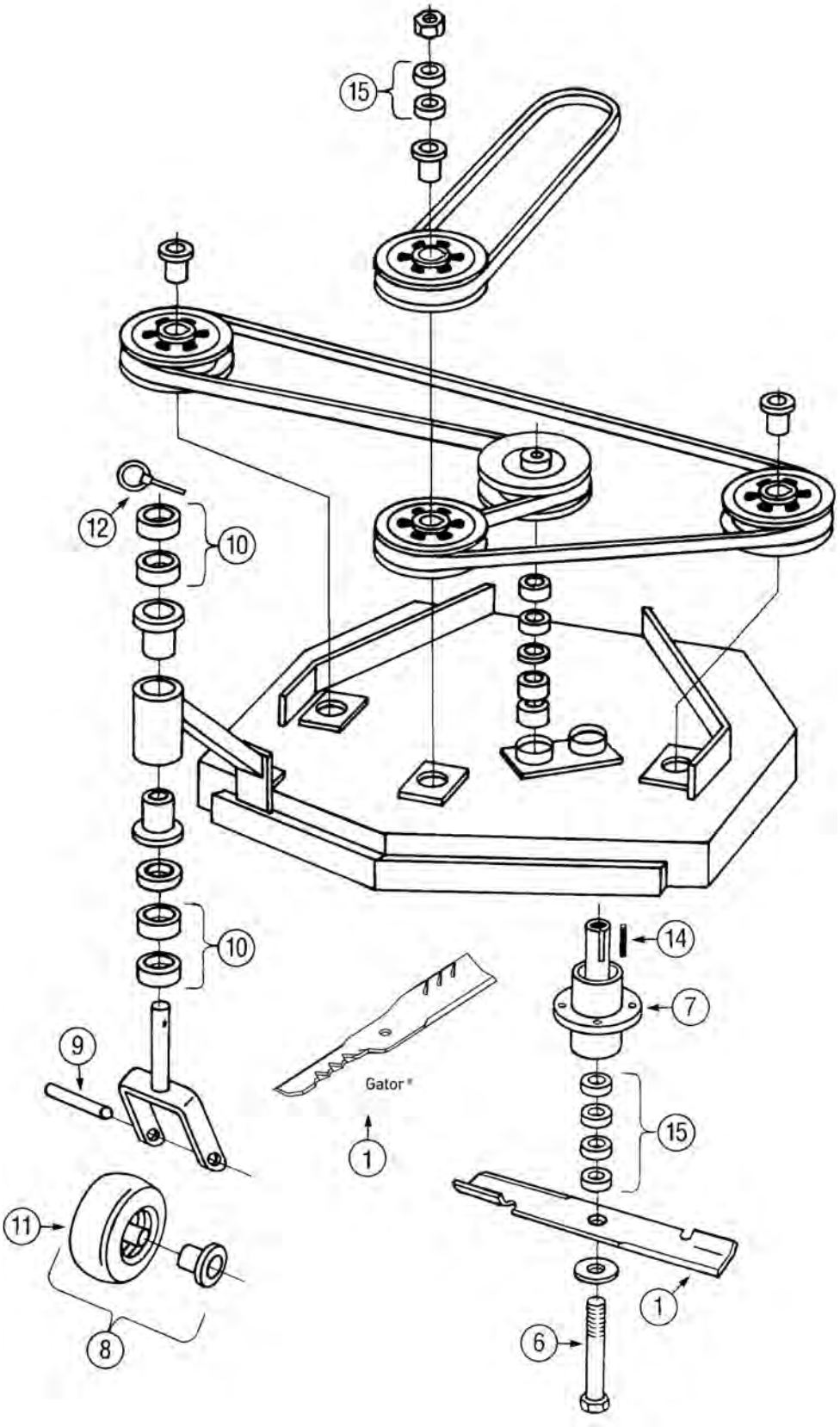

## Ferris 48", 52", 61", & 72"

| № | Part No. | OEM No. | Description |
|---|---|---|---|
| **Blades for 48" Decks with 5/8" Round Center Hole** | | | |
| 1 | 91-183 | 520843 | Standard-Notch Lift, 16-1/4" |
| | 99-127 | 520843 | High-Lift, **Not for ICD Decks**, 16-1/4" |
| | 91-368 | | Mulching, 16-1/4" |
| | 96-310 | | Gator® G3™, 16-1/4" |
| | 596-310 | | Gator G5™, **Not for ICD Decks**, 16-1/4" |
| | 396-716 | | Gator G6®, **Not for ICD Decks**, 16-1/4" |
| **Blades for 52" Decks with 5/8" Round Center Hole** | | | |
| 1 | 91-235 | 5021227 | Standard-Lift, 18" |
| | 91-623 | 481711 | High-Lift, **Not for ICD Decks**, 18" |
| | 96-344 | | Gator G3, 18" |
| | 596-344 | | Gator G5, **Not for ICD Decks**, 18" |
| | 396-726 | | Gator G6, **Not for ICD Decks**, 18" |
| **Blades for 61" Decks with 5/8" Round Center Hole** | | | |
| 1 | 91-209 | 520842 | Standard-Lift, 21" |
| | 91-628 | 481711 | High-Lift, **Not for ICD Decks**, 21" |
| | 96-347 | | Gator G3, 21" |
| | 596-347 | | Gator G5, **Not for ICD Decks**, 21" |
| | 396-727 | | Gator G6, **Not for ICD Decks**, 21" |
| **Blades for 72" Decks with 5/8" Round Center Hole** | | | |
| 1 | 91-209 | 481709 | Standard-Lift, 24-1/2" |
| | 96-341 | | Gator G3, 24-1/2" |
| | 596-341 | | Gator G5, **Not for ICD Decks**, 24-1/2" |
| | 396-764 | | Gator G6, **Not for ICD Decks**, 24-1/2" |
| **Replacement Parts** | | | |
| 4 | 04-125 | 1525019-76 | Blade Bolt |
| 5 | 82-305 | 1541480 | Spindle Shaft (Not Shown) |
| 7 | | 1530301 | Spindle Assembly |
| 8 | 72-795 | 1521181 | Wheel Assembly |
| 9 | 45-188 | 1541657 | Spanner |
| 10 | 09-803 | 1541476 | Spacer, 1/2" |
| 11 | 58-131 | | Tire, 9 x 350-4 |
| 12 | 02-446 | 1520655 | Linchpin, 7/16" |
| 13 | | 1520864 | Snap Ring |
| 14 | 80-014 | 1550407-9 | Key, 1/4" |
| 15 | 09-802 | 1541477 | Spacer, 1/4" |

## Grasshopper 2000 Series Mid-Mount

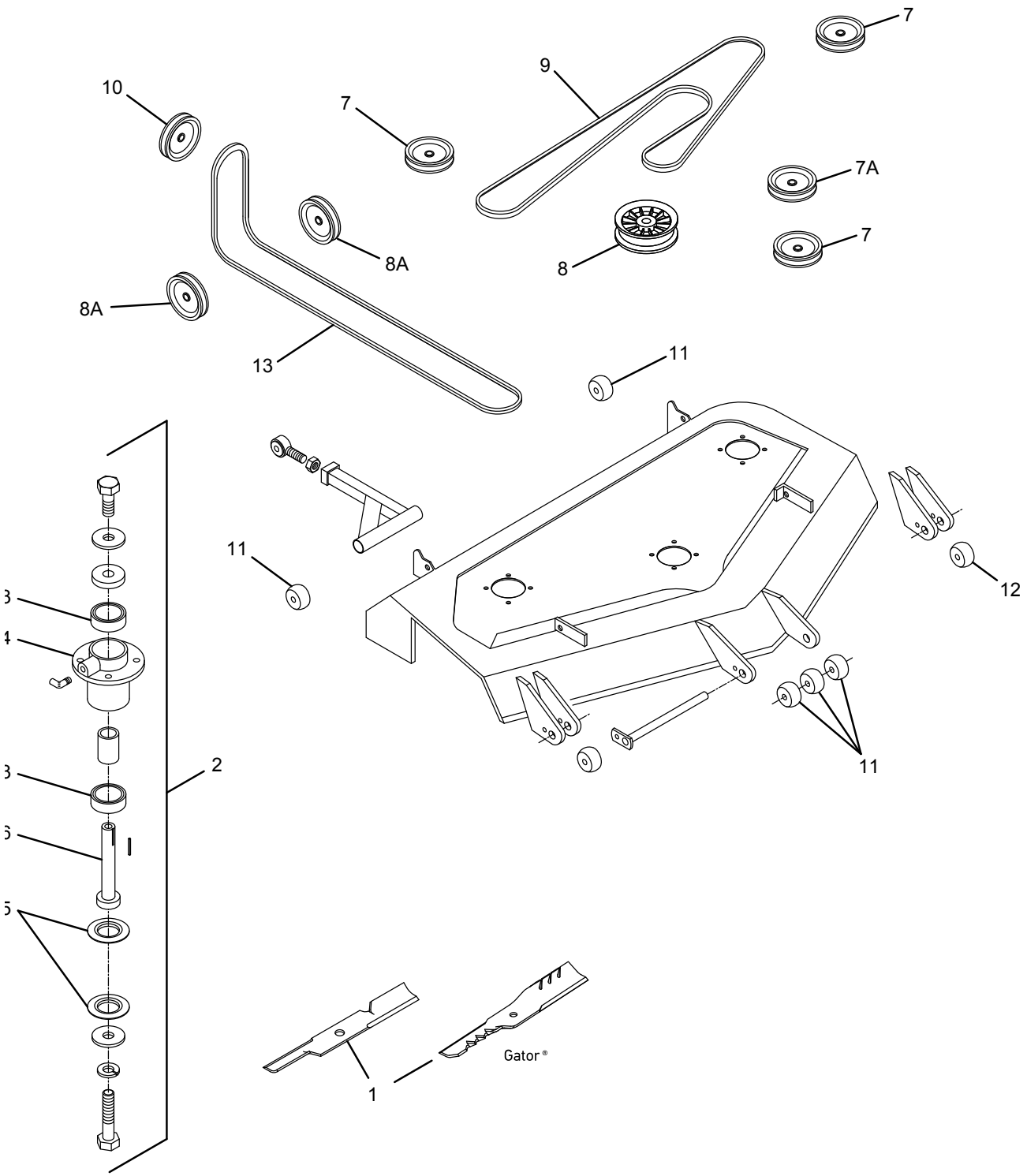

## Grasshopper 2000 Series Mid-Mount

| № | Part No. | OEM No. | Description |
|---|---|---|---|
| **Blades for 52" M152 Decks with 1/2" Round Center Hole** | | | |
| 1 | 91-538 | 320240 | Low-Lift, 18" |
| | 91-532 | 320239 | High-Lift Notch, 18" |
| | 91-535 | 320238 | Contour Blade, 18" |
| | 96-329 | | Gator® G3™, 18" |
| | 596-329 | | Gator G5™, 18" |
| | 396-729 | | Gator G6®, 18" |
| **Blades for 61" M161 Decks with 1/2" Round Center Hole** | | | |
| 1 | 91-547 | 320242 | Low-Lift, 21" |
| | 91-531 | 320245 | High-Lift Notch, 21" |
| | 91-537 | 320246 | Extreme High-Lift Notch, 21" |
| | 91-534 | 320244 | Contour Blade, 21" |
| | 96-346 | | Gator G3, 21" |
| | 596-346 | | Gator G5, 21" |
| | 396-712 | | Gator G6, 21" |
| **Blades for 72" M172 Decks with 1/2" Round Center Hole** | | | |
| 1 | 91-544 | 320250 | Low-Lift, 25" |
| | 91-533 | 320253 | High-Lift Notch, 25" |
| | 91-036 | 320244 | Contour Blade, 25" |
| | 396-778 | | Gator G6, 25" |
| **Replacement Parts** | | | |
| 2 | 82-351 | 623781 | Spindle Assembly, Right & Left, M152 & M161 |
| | 82-352 | 623782 | Spindle Assembly, Center, M152 & M161 |
| | | 623786 | Spindle Assembly, Right & Left, M172 |
| | | 623787 | Spindle Assembly, Center, M172 |
| 3 | 45-220 | 110082 | Spindle Bearing |
| 4 | | 604421 | Spindle Housing, M152 & M161 |
| | | 824150 | Spindle Housing, M172 |
| 5 | 09-006 | 421200 | Fiber Blade Washer |
| 6 | | 604770 | Spindle Shaft, Right & Left |
| | | 604773 | Spindle Shaft, Center |
| 7 | | 415892 | Spindle Pulley, M161 |
| | | 414745 | Spindle Pulley, M172 |
| 7A | | 415897 | Spindle Pulley, Upper Center, M152 & M161 |
| | | 415894 | Spindle Pulley, Upper Center, M172 |
| 8 | | 393250 | Idler Deck Belt |
| 8A | | 393376 | Idler PTO Belt |
| | | 393390 | Idler PTO Belt |
| 9 | | 383082 | Deck Belt, M152 Decks |
| | | 382085 | Deck Belt, M161 Decks |
| | | 382098 | Deck Belt, M172 Decks |
| 10 | | 388740 | PTO Clutch |
| 11 | 72-133 | 426122 | Deck Wheel |
| 12 | | 484230 | Deck Wheel, M152 & M161 |
| | | 942137 | Deck Wheel, M172 |
| 13 | | 382085 | PTO Belt |

## Grasshopper 3344 Mid-Mount

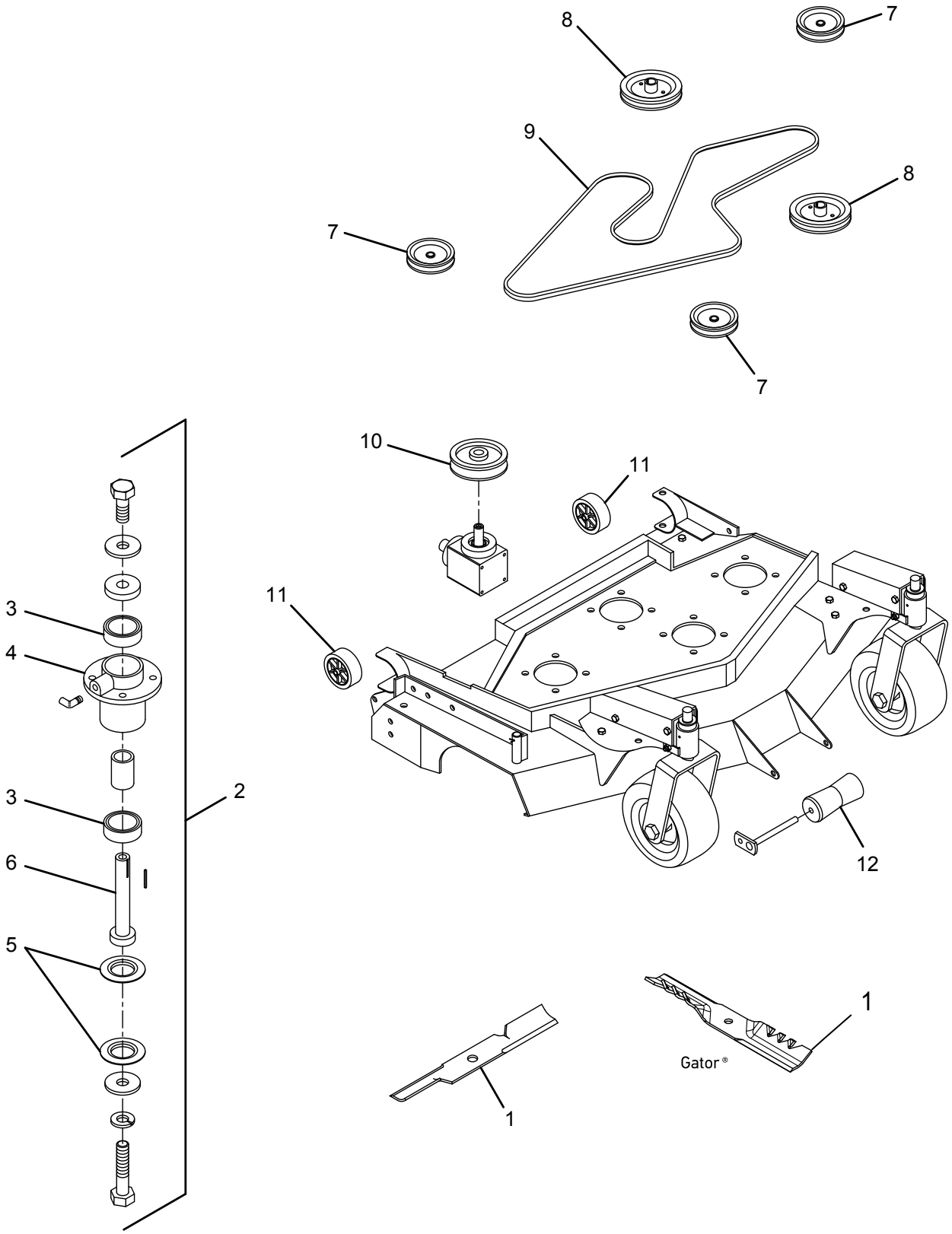

## Grasshopper 3344 Mid-Mount

| № | Part No. | OEM No. | Description |
|---|---|---|---|
| **Blades for 44" Decks with 1/2" Round Center Hole** | | | |
| 1 | 91-557 | 320231 | Low-Lift, 15" |
| | 91-536 | 320234 | High-Lift Notch, 15" |
| | 96-343 | | Gator® G3™, 15" |
| | 396-713 | 320231 | Gator G6, 15" |
| **Replacement Parts** | | | |
| 2 | | 623773 | Spindle Assembly, Right |
| | | 623774 | Spindle Assembly, Left & Center |
| 3 | 45-220 | 110082 | Spindle Bearing |
| 4 | | 320545 | Spindle Housing |
| 5 | 09-006 | 412200 | Fiber Blade Washer |
| 6 | | 604768 | Spindle Shaft, Right |
| 6 | | 604764 | Spindle Shaft, Left & Center |
| 7 | | 414675 | Spindle Pulley |
| 8 | 78-021 | 393225 | Idler |
| 9 | | 383012 | Deck Belt |
| 10 | | 515874 | Drive Pulley |
| 11 | | 426122 | Deck Wheel |
| 12 | 72-134 | 603725 | Deck Roller |

## Grasshopper 2044, 2144, 6044, 6144, 9044, 9144, & 9244 Decks

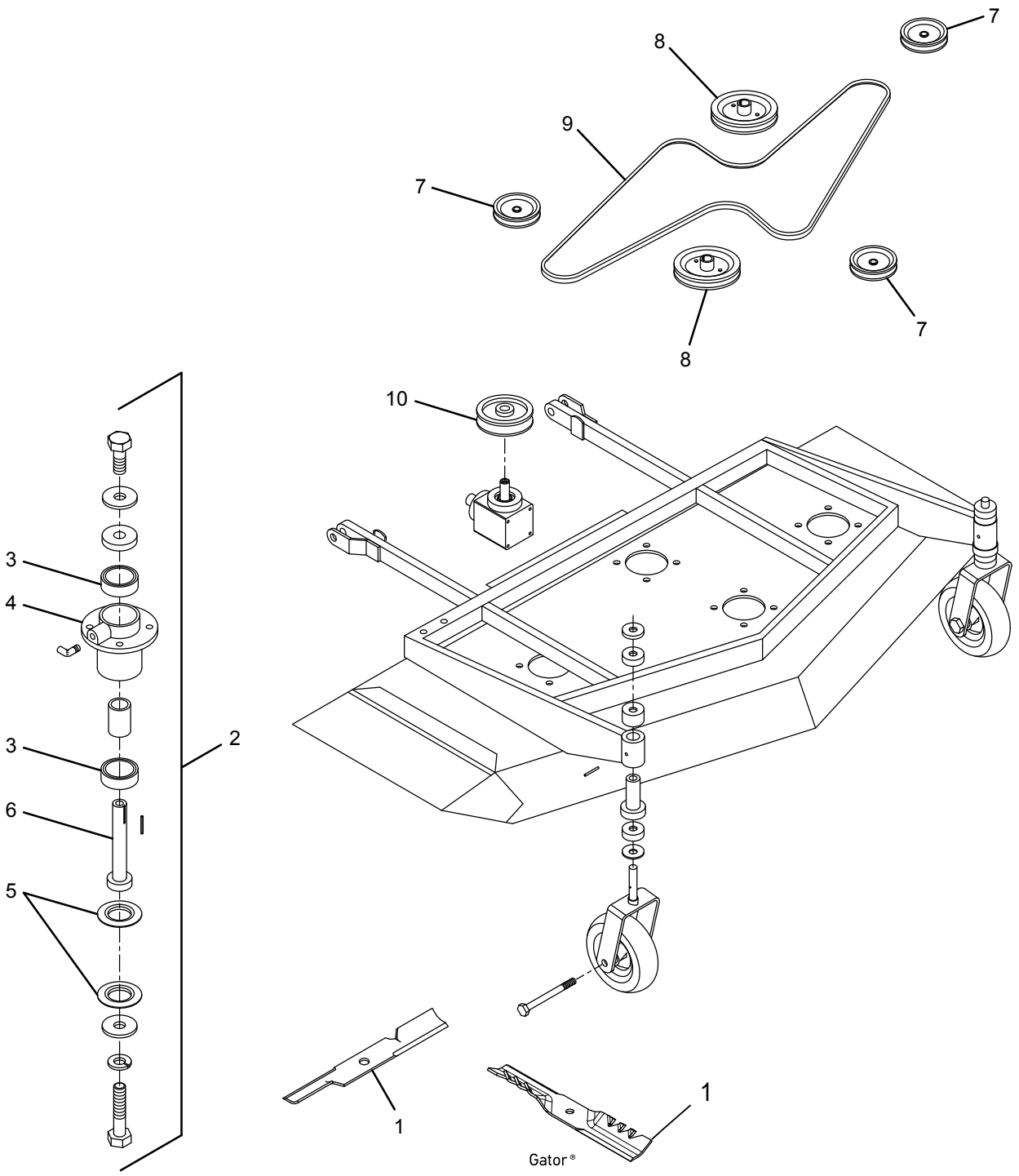

## Grasshopper 2044, 2144, 6044, 6144, 9044, 9144, & 9244 Decks

| № | Part No. | OEM No. | Description |
|---|---|---|---|
| **Blades for 44" Decks with 1/2" Round Center Hole** | | | |
| 1 | 91-557 | 320231 | Low-Lift, 15" |
| | 91-536 | 320234 | High-Lift Notch, 15" |
| | 96-343 | | Gator® G3™, 15" |
| | 396-713 | 320231 | Gator G6®, 15" |
| **Replacement Parts** | | | |
| 3 | 45-225 | 120081 | Spindle Bearing, fits 2044, 2144, 6044, & 6144 |
| | 45-220 | 110082 | Spindle Bearing, fits 9044 & 9244 |
| 4 | | 320526 | Spindle Housing |
| 5 | 09-006 | 421200 | Fiber Blade Washers |
| 6 | | 603775 | Spindle Shaft, fits 2144, 2044, & 6044 |
| | | 604770 | Spindle Shaft, fits 9044 & 9244 |
| | | 415826 | Spindle Pulley, fits 2144, 2044, 6044, & 6144 |
| 7 | | 414675 | Spindle Pulley, 9044 & 9244 |
| 8 | 78-021 | 393225 | Idler |
| 9 | | 383000 | Deck Belt, fits 2144, 2044, 6044, & 6144 |
| | | 382990 | Deck Belt, fits 9044 & 9244 |
| 10 | | 415875 | Drive Pulley, fits 2144, 2044, 6044, & 6144 |
| | | 415876 | Drive Pulley, fits 9044 & 9244 |

## Grasshopper 9344 & 9544 Decks

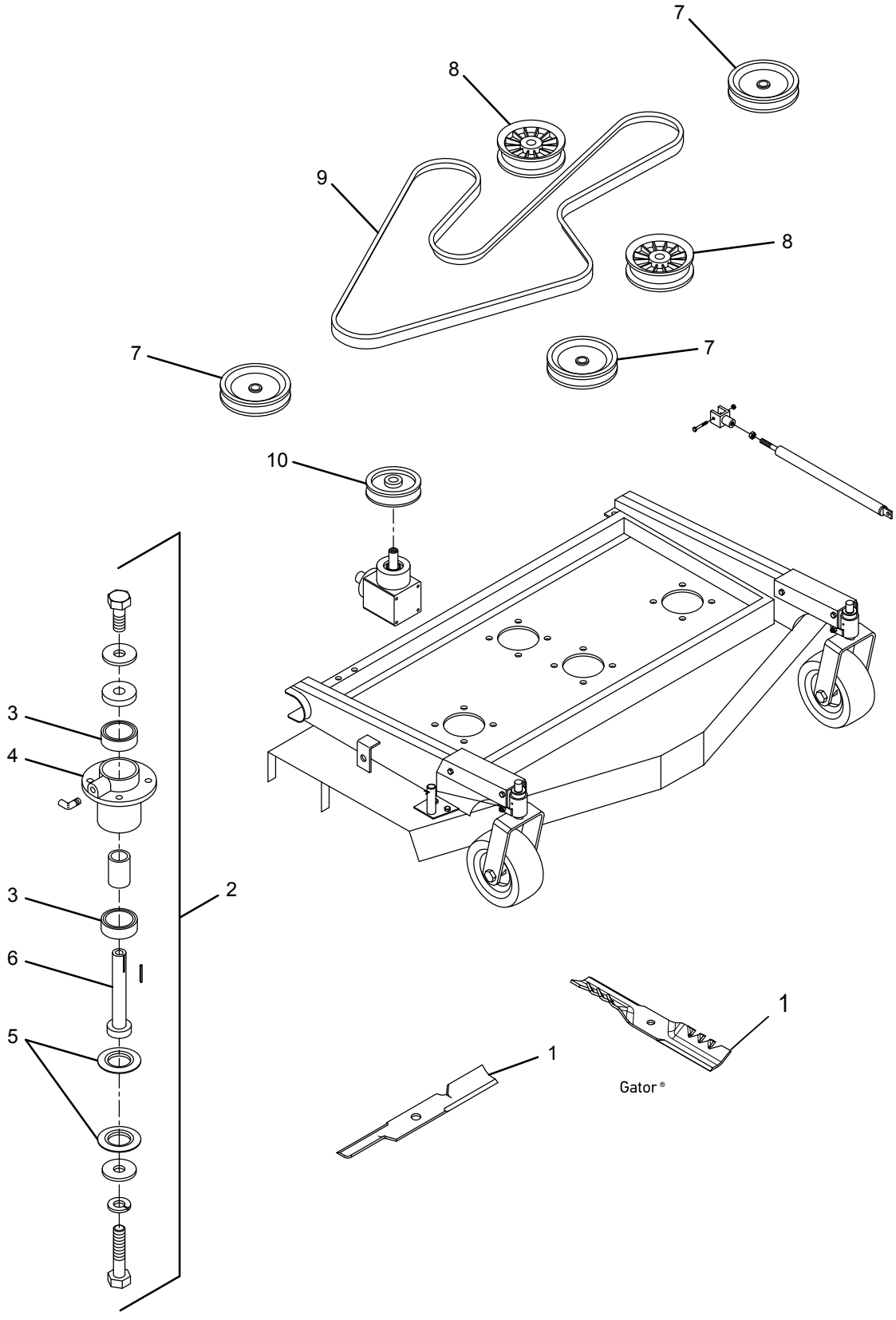

## Grasshopper 9344 & 9544 Decks

| № | Part No. | OEM No. | Description |
|---|---|---|---|
| **Blades for 44" Decks with 1/2" Round Center Hole** | | | |
| 1 | 91-557 | 320231 | Low-Lift, 15" |
| | 91-536 | 320234 | High-Lift Notch, 15" |
| | 96-343 | | Gator® G3™, 15" |
| | 396-713 | 320231 | Gator G6®, 15" |
| **Replacement Parts** | | | |
| 4 | | 320526 | Spindle Housing |
| 5 | 09-006 | 421200 | Fiber Blade Washer |
| 6 | | 604770 | Spindle Shaft |
| 7 | | 414675 | Spindle Pulley |
| 8 | 78-021 | 393225 | Idler |
| 9 | | 383010 | Deck Belt |
| 10 | | 415876 | Drive Pulley |

## Grasshopper 9148, 9348, & 9548 Decks

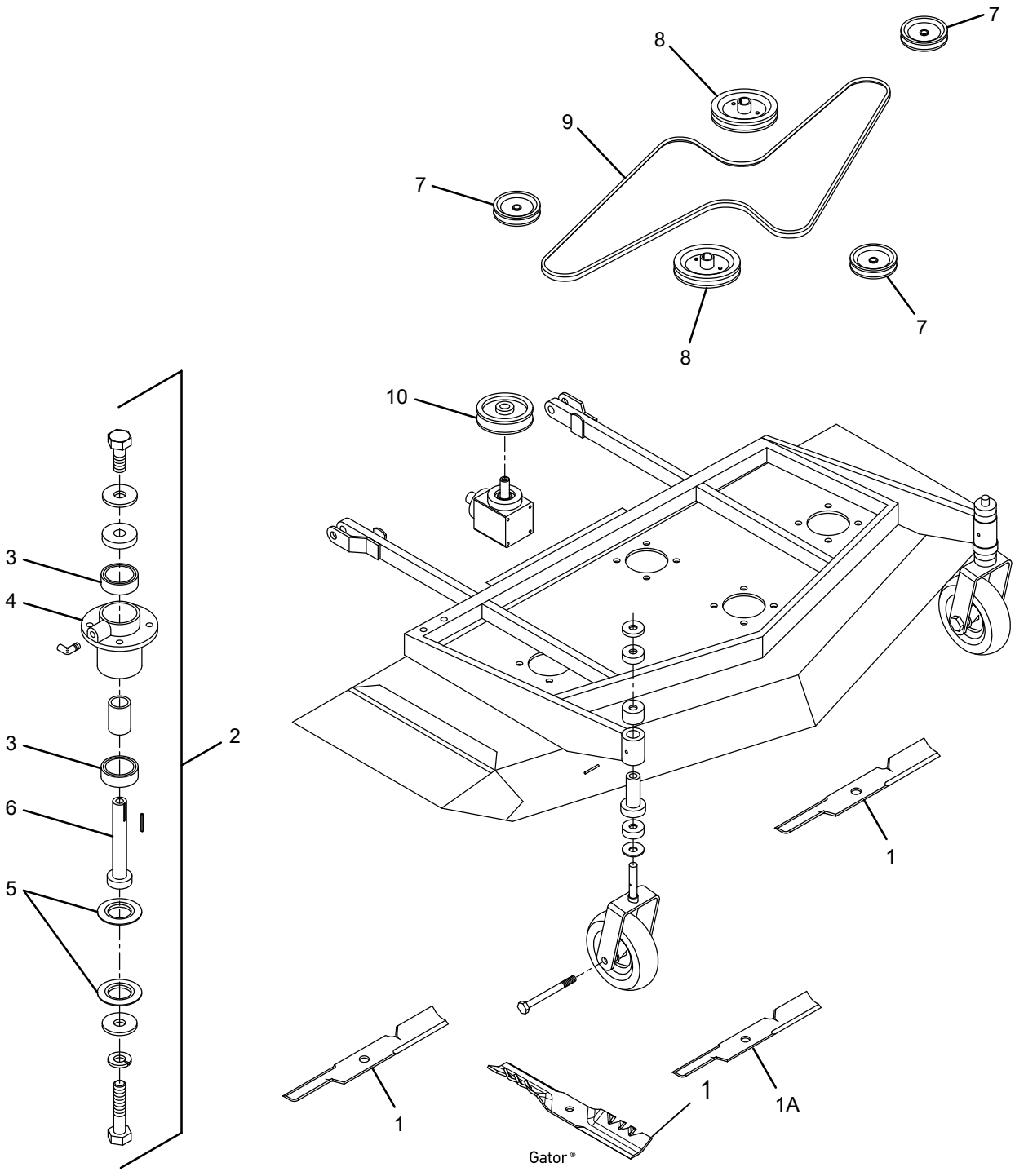

## Grasshopper 9148, 9348, & 9548 Decks

| № | Part No. | OEM No. | Description |
|---|---|---|---|
| **Blades for 48" Decks with 1/2" Round Center Hole** | | | |
| 1 | 91-538 | 320240 | Low-Lift, (Uses 2), 18" |
| | 91-532 | 320239 | High-Lift Notch, (Uses 2), 18" |
| | 91-535 | 320238 | Contour Blade, (Uses 2), 18" |
| | 96-329 | | Gator® G3,™ (Uses 2), 18" |
| | 596-329 | | Gator G5™, (Uses 2), 18" |
| 1A | 91-557 | 320231 | Low-Lift, (Uses 1), 15" |
| | 91-536 | 320234 | High-Lift Notch, (Uses 1), 15" |
| | 96-343 | | Gator G3, (Uses 1), 15" |
| | 396-713 | 320231 | Gator G6®, 15" |
| **Replacement Parts** | | | |
| 4 | | 320526 | Spindle Housing |
| 5 | 09-006 | 421200 | Fiber Blade Washer |
| 6 | | 604770 | Spindle Shaft Right |
| 7 | | 414696 | Spindle Pulley |
| 8 | 78-021 | 393225 | Idler |
| 9 | | 383008 | Deck Belt |
| 10 | | 415886 | Drive Pulley |

## Grasshopper 9352 Deck

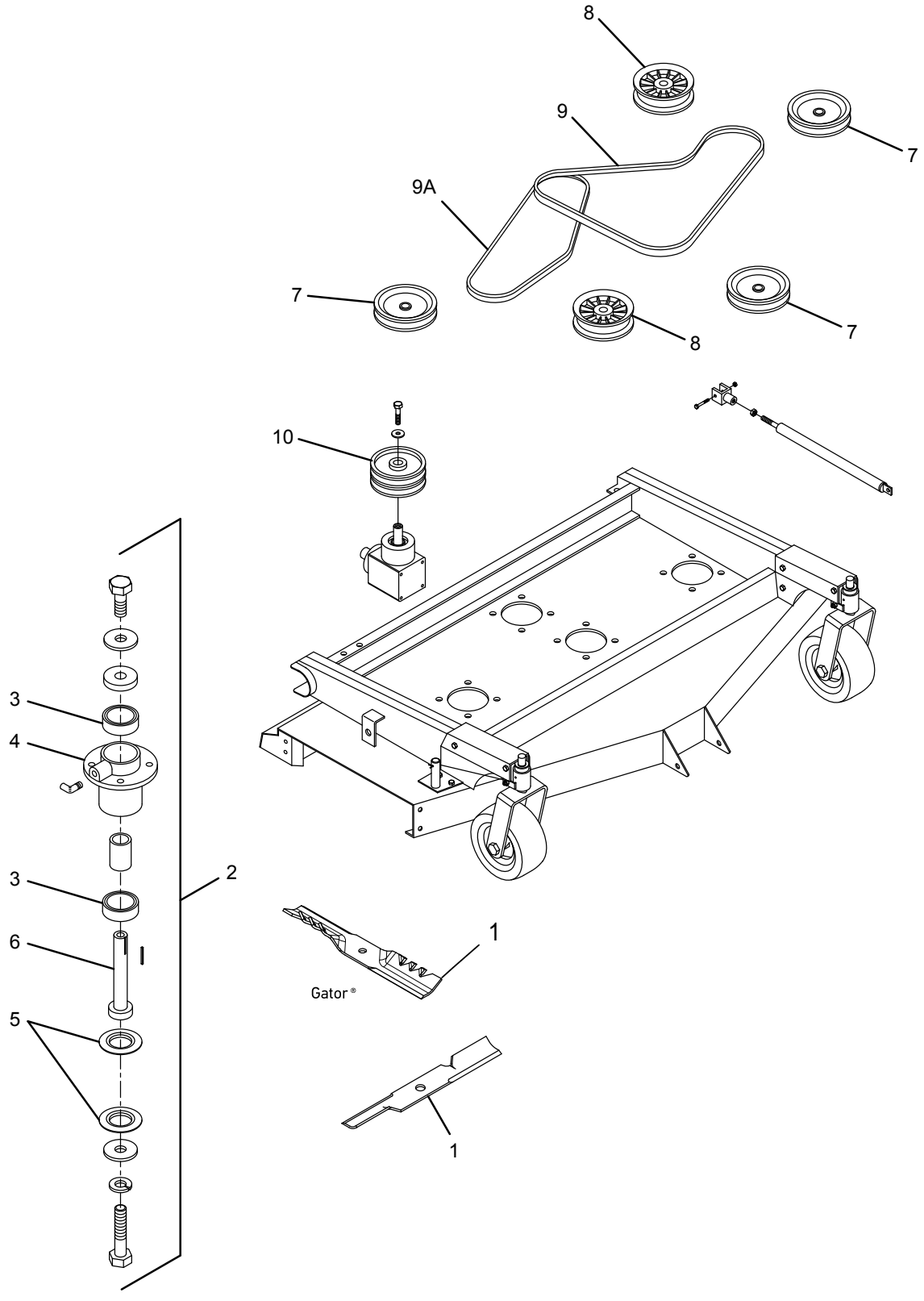

## Grasshopper 9352 Deck

| № | Part No. | OEM No. | Description |
|---|---|---|---|
| **Blades for 52" Decks with 1/2" Round Center Hole** | | | |
| 1 | 91-538 | 320240 | Low-Lift, 18" |
| | 91-532 | 320239 | High-Lift Notch, 18" |
| | 91-535 | 320238 | Contour Blade, 18" |
| | 96-329 | | Gator® G3™, 18" |
| | 596-329 | | Gator G5™, 18" |
| | 396-729 | | Gator G6®, 18" |
| **Replacement Parts** | | | |
| 2 | | 623784 | Spindle Assembly |
| 3 | 45-220 | 110082 | Spindle Bearing |
| 4 | | 320526 | Spindle Housing |
| 5 | 09-006 | 421200 | Fiber Blade Washer |
| 6 | | 604770 | Spindle Shaft |
| 7 | | 414686 | Spindle Pulley, fits 9352 |
| 8 | 78-021 | 393225 | Idler |
| 9 | | 382037 | Deck Belt, Left |
| 9A | | 382800 | Deck Belt, Right |
| 10 | | 416116 | Drive Pulley, Double V |

## Grasshopper 9061 Deck

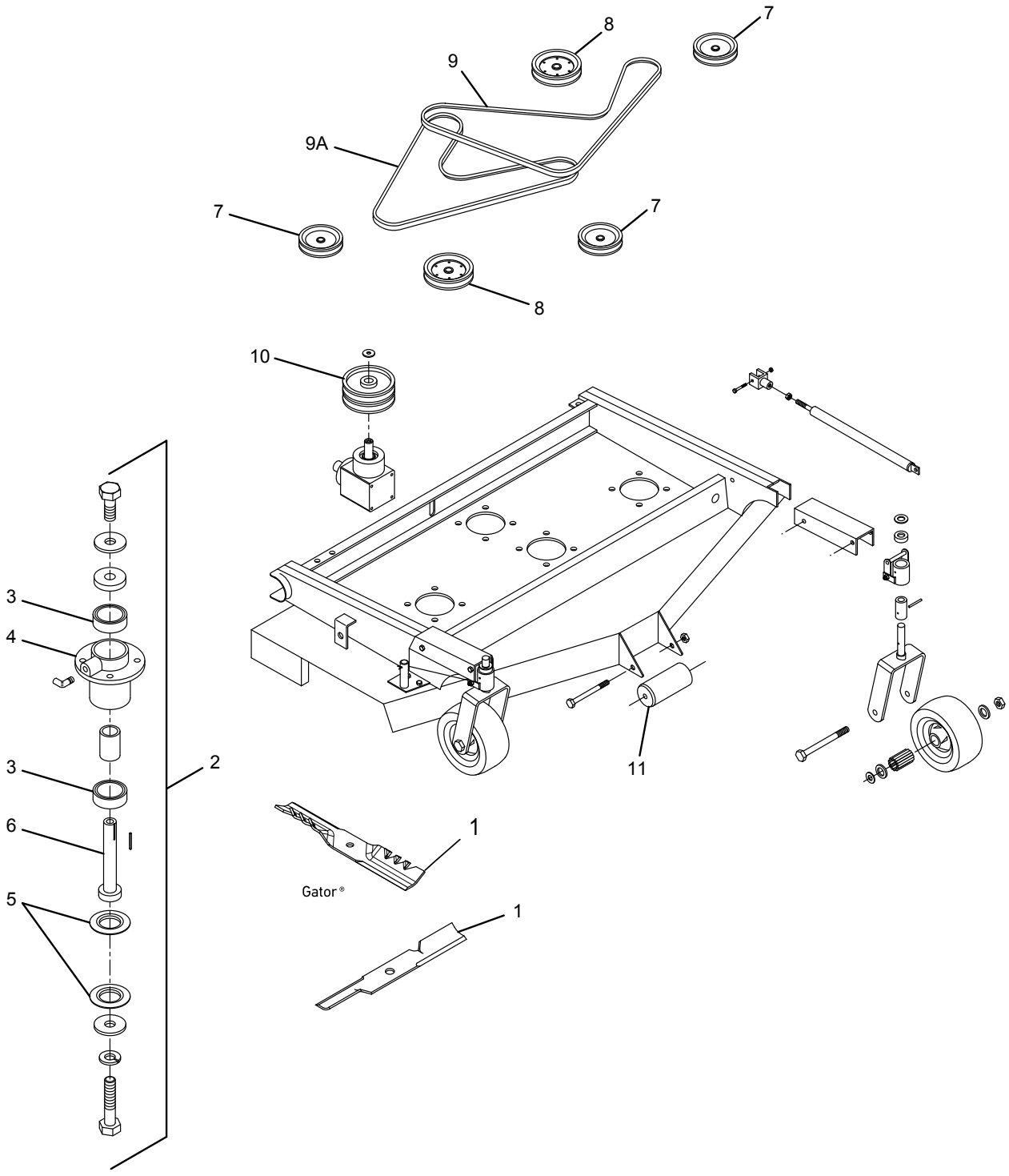

## Grasshopper 9061 Deck

| № | Part No. | OEM No. | Description |
|---|---|---|---|
| **Blades for 61" Decks with 1/2" Round Center Hole** | | | |
| | 91-547 | 320242 | Low-Lift, 21" |
| | 91-531 | 320245 | High-Lift Notch, 21" |
| | 91-537 | 320246 | Extreme High-Lift Notch, 21" |
| 1 | 91-534 | 320244 | Contour Blade, 21" |
| | 96-346 | | Gator® G3™, 21" |
| | 596-346 | | Gator G5™, 21" |
| | 396-712 | | Gator G6®, 21" |
| **Replacement Parts** | | | |
| 2 | | 623785 | Spindle Assembly |
| 3 | 45-225 | 120081 | Spindle Bearing |
| 4 | | 604770 | Spindle Housing |
| 5 | 09-006 | 421200 | Fiber Blade Washer |
| 6 | | 603775 | Spindle Shaft |
| 7 | | 415876 | Drive Pulley |
| 8 | 78-021 | 393225 | Idler |
| 9 | | 382049 | Deck Belt, Left |
| 9A | | 382049 | Deck Belt, Right |
| 10 | | 416116 | Drive Pulley, Double V |
| 11 | | 426136 | Deck Roller |

## Grasshopper 9561 Deck

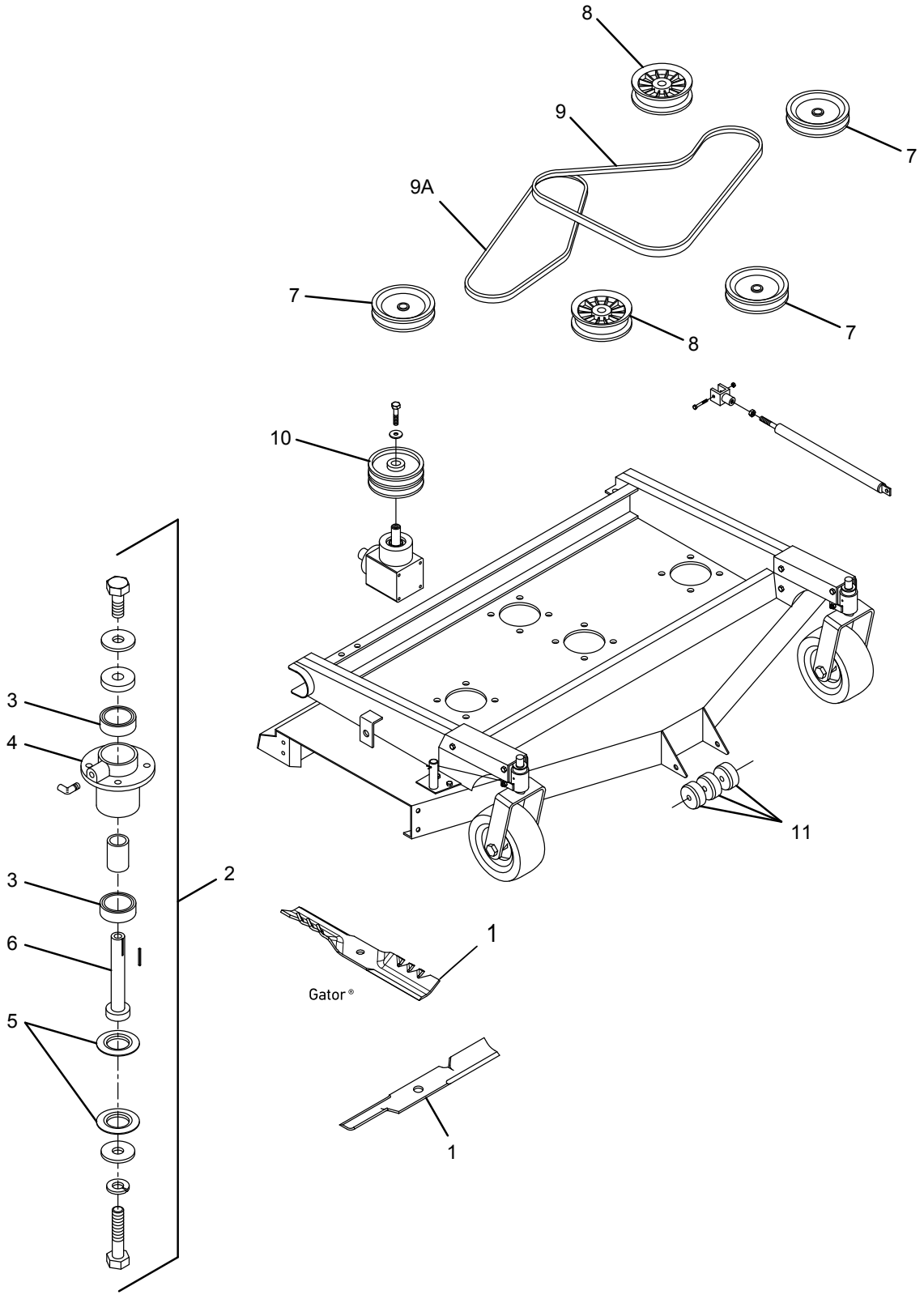

## Grasshopper 9561 Deck

| № | Part No. | OEM No. | Description |
|---|---|---|---|
| **Blades for 61" Decks with 1/2" Round Center Hole** | | | |
| 1 | 91-547 | 320242 | Low-Lift, 21" |
| | 91-531 | 320245 | High-Lift Notch, 21" |
| | 91-537 | 320246 | Extreme High-Lift Notch, 21 |
| | 91-534 | 320244 | Contour Blade, 21" |
| | 96-346 | | Gator® G3™, 21" |
| | 596-346 | | Gator G5™, 21" |
| | 396-712 | | Gator G6®, 21" |
| **Replacement Parts** | | | |
| 2 | | 623784 | Spindle Assembly, Right |
| | | 623783 | Spindle Assembly, Center & Left |
| 3 | 45-220 | 110082 | Spindle Bearing |
| 4 | | 320526 | Spindle Housing |
| 5 | 09-006 | 421200 | Fiber Blade Washer |
| 6 | | 604770 | Spindle Shaft, Right |
| | | 604768 | Spindle Shaft, Center & Left |
| 7 | | 415867 | Spindle Pulley, (2000) |
| 8 | 78-021 | 393225 | Idler |
| 9 | | 382865 | Deck Belt, Left |
| 9A | | 382025 | Deck Belt, Right |
| 10 | | 416116 | Drive Pulley, Double V |
| 11 | 72-133 | 426122 | Deck Wheel |

## Hustler Parts

Parts for Hustler FasTrak,
44" & 52" Deck Mowers

Mini Z & Super Mini Z
44" & 52" Deck Mowers

Super Z
52", 60", & 72" Deck Mowers

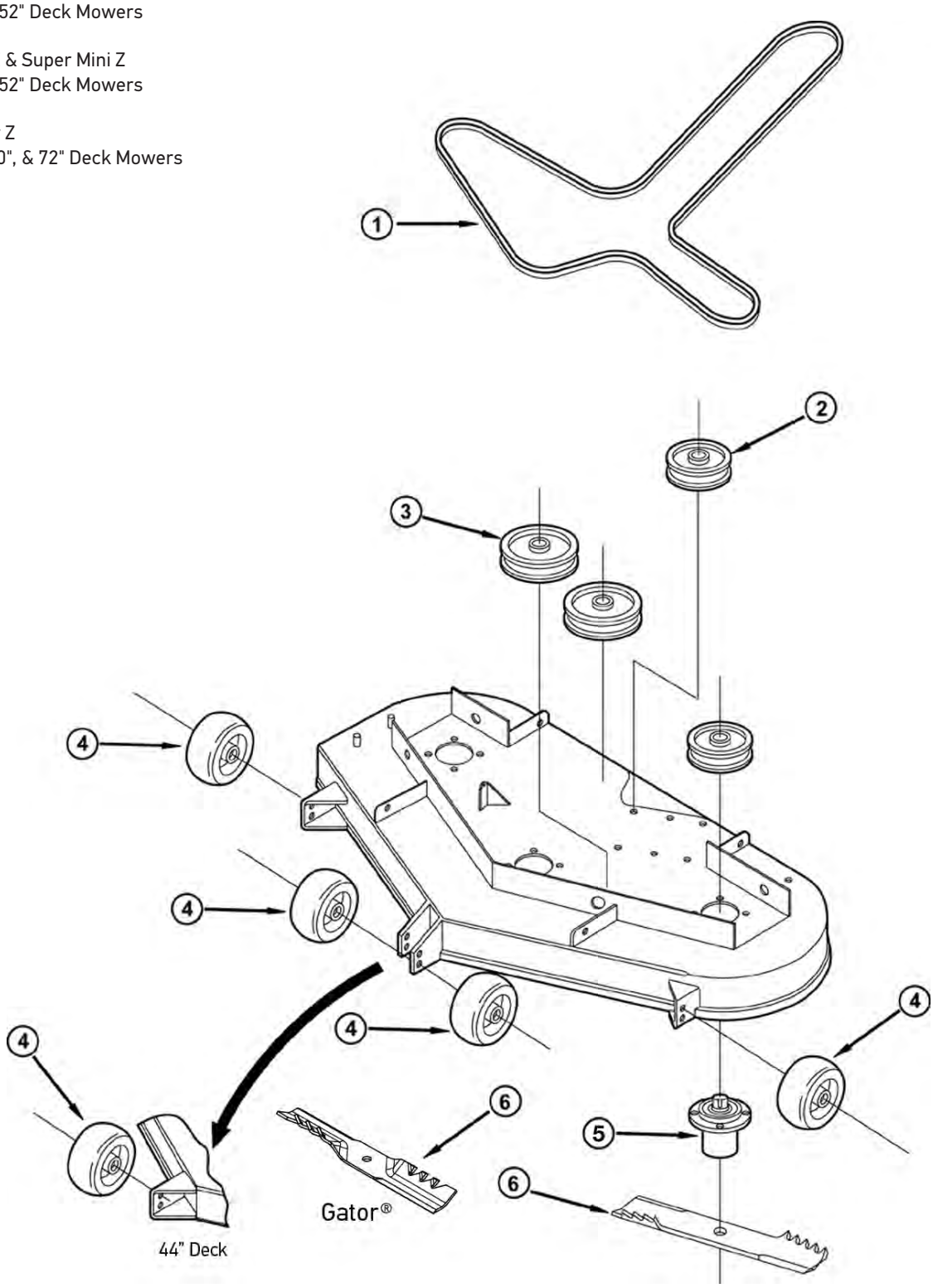

## Hustler Parts

### Hustler FasTrak

| № | Part No. | OEM No. | Description |
|---|---|---|---|
| | 75-756 | 791335 | Deck Belt, 5/8" x 143-1/4" |
| 1 | 75-757 | 793828 | Deck Belt, 1/2" x 116-5/16" |
| | 75-759 | 793893 | Deck Belt, 5/8" x 127-1/2" |
| 2 | 78-026 | 784504 | Flat Idler Pulley, 44" & 52" |
| 3 | 78-026 | 784504 | Flat Idler Pulley, 44" & 52" |
| 4 | 72-311-1 | 31997 | Anti-Scalp Wheel, 44" & 52" |
| 5 | 82-021 | 350595 | Spindle Assembly |
| | 90-205 | 784256 | Replacement Blade, 44" |
| 6 | 96-302 | | Gator® G3™, Hi-Lift Blades, 44" Decks |
| | 90-206 | 783753 | Replacement Blade, 52" |

### Mini Z & Super Mini Z

| | | | |
|---|---|---|---|
| | | 786483 | Deck Belt, 52" |
| 1 | 75-755 | 789388 | Deck Belt, 5/8" x 151-1/8" |
| | 75-756 | 791335 | Deck Belt, 5/8" x 143-1/4" |
| 2 | 78-022 | 781856 | Flat Idler Pulley, 44" & 52" |
| 3 | 78-023 | 781385 | Flat Idler Pulley, 44" & 52" |
| 4 | 72-311-1 | 31997 | Anti-Scalp Wheel, 44" & 52" |
| 5 | 82-021 | 350595 | Spindle Assembly |
| | 90-205 | 784256 | Replacement Blade, 44" |
| 6 | 96-302 | | Gator G3, Hi-Lift Blades, 44" Decks |
| | 90-206 | 783753 | Replacement Blade, 52" |
| | 396-704 | | Gator G6®, 52" Decks |

### Super Z

| | | | |
|---|---|---|---|
| | 75-664 | 782292 | Deck Belt, 52" |
| 1 | 75-662 | 781310 | Deck Belt, 60" |
| | 75-665 | 784207 | Deck Belt, 72" |
| 2 | 78-022 | 781856 | Flat Idler Pulley, 44" & 52" |
| 3 | 78-023 | 781385 | Flat Idler Pulley, 44" & 52" |
| 4 | 72-311-1 | 31997 | Anti-Scalp Wheel, 52", 60", & 72" |
| 5 | 82-021 | 350595 | Spindle Assembly, 52", 60", & 72" |
| | 90-207 | 781898 | Replacement Blade, 52" |
| | 90-208 | 782516 | Replacement Blade, 60" |
| 6 | 396-703 | | Gator G6, 60" Decks |
| | | 783977 | Replacement Blade, 72" |
| | 396-726 | | Gator G6, 72" Decks |

## Scag Freedom — Z48-52 Deck Mower

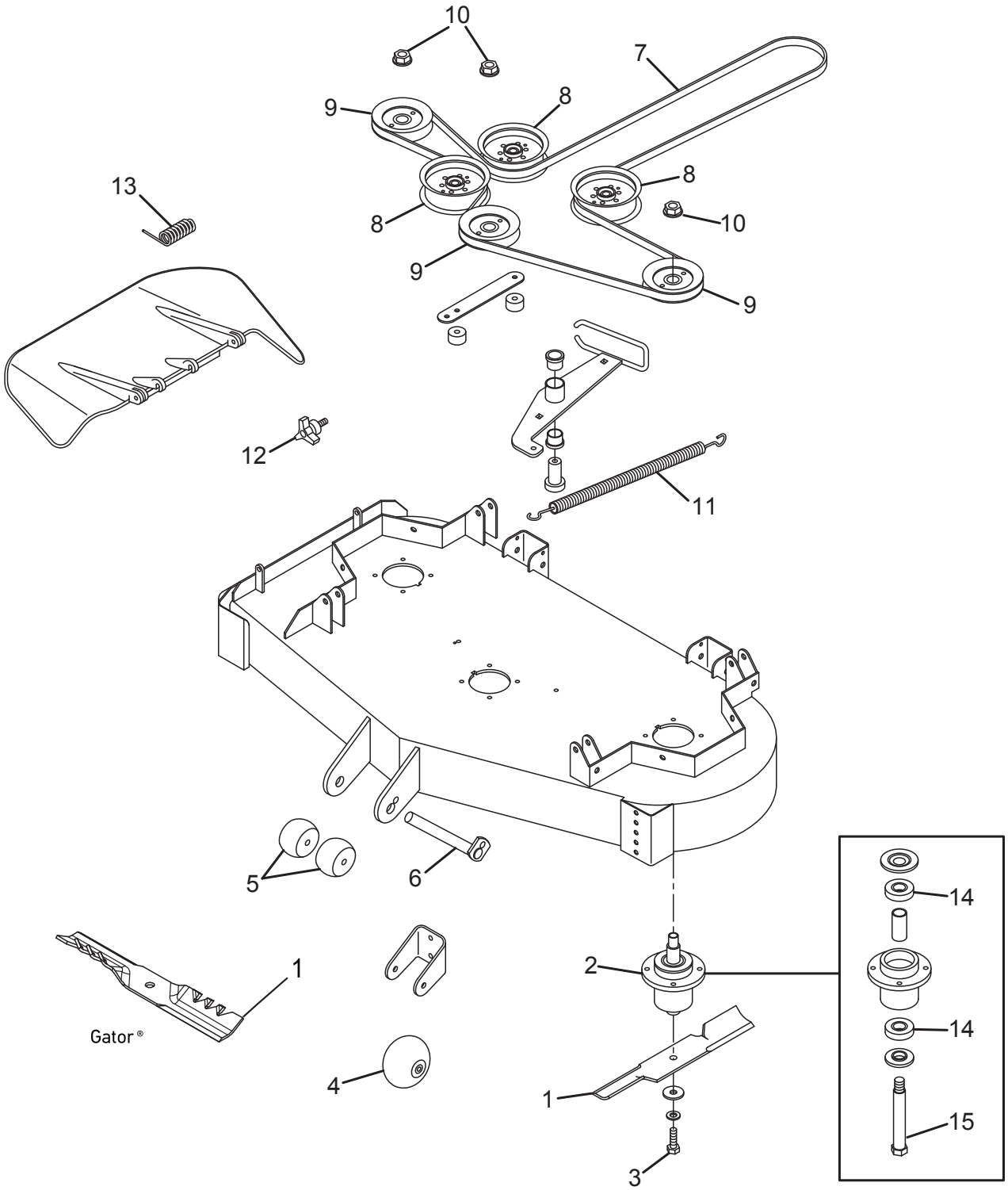

## Scag Freedom — Z48-52 Deck Mower

| № | Part No. | OEM No. | Description |
|---|---|---|---|
| **Blades for 48" Decks with 5/8 " Round Center Hole** | | | |
| 1 | 91-620 | 481706 | Standard-Notch Lift, 16-1/2" |
| | 92-145 | 482877 | High-Notch Lift, 16-1/2" |
| | 91-621 | 481710 | Extreme High-Notch Lift, 16-1/2" |
| | 96-344 | | Gator® G3™, 16-1/2" |
| | 396-726 | | Gator G6®, 16-1/2" |
| **Blades for 52" Decks with 5/8 " Round Center Hole** | | | |
| 1 | 91-622 | 481707 | Standard-Notch Lift, 18" |
| | 91-637 | 482878 | High-Notch Lift, 18" |
| | 91-623 | 481711 | Extreme High-Notch Lift, 18" |
| | 96-344 | | Gator G3, 18" |
| | 596-344 | | Gator G5™, 18" |
| | 396-726 | | Gator G6, 18" |
| **Replacement Parts** | | | |
| 2 | | 461950 | Spindle Assembly |
| 3 | | 04001-121 | Blade Bolt, 5/8-11" x 1-1/2" |
| 4 | 72-758 | 481632 | Deck Wheel |
| 5 | | 482295 | Deck Wheel |
| 6 | | 451926 | Shaft |
| 7 | 75-648 | 483325 | Deck Belt, for 48", 5/8" x 140-3/4" |
| | 75-649 | 483326 | Deck Belt, for 52", 5/8" x 148-1/4" |
| 8 | | 483422 | Idler Pulley, 5-3/4" x 1-3/4" x 3/8" |
| 9 | | 483323 | Spindle Pulley, for 48" Deck, ID: 5" x 25 mm |
| | | 483324 | Spindle Pulley, for 52" Deck, ID: 5-3/4" x 25 mm |
| 10 | | 04112-06 | Nut, Spiral Lock, 3/4-16" |
| 11 | | 483375 | Spring, Idler |
| 12 | | 481625-01 | Wing Nut |
| 13 | | 482245 | Spring, Deflector |
| 14 | | 483303 | Bearing |
| 15 | | 43695 | Spindle Shaft |

## Scag Sabretooth Turf Tigers 52", 61", & 72" Deck Mower

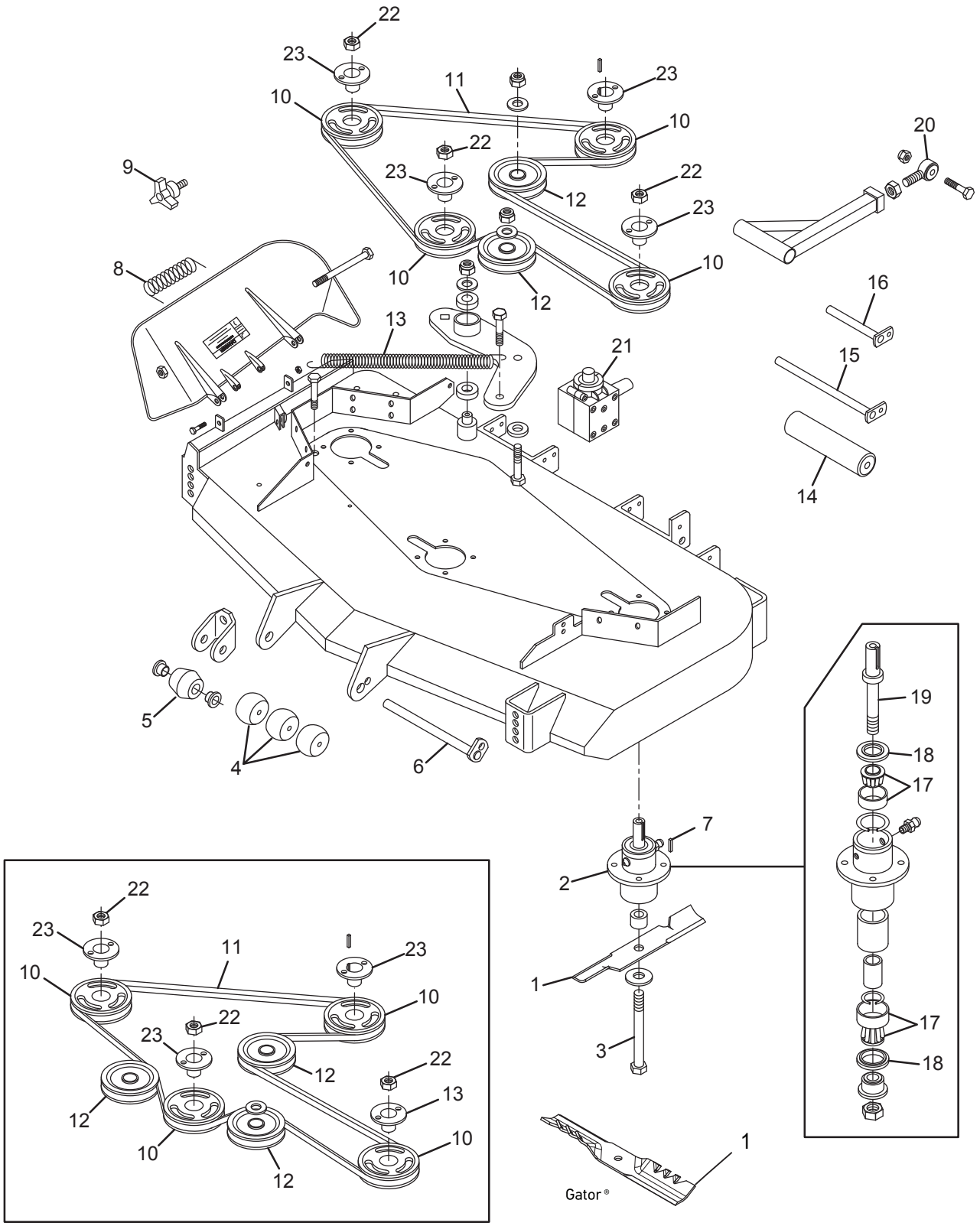

## Scag Sabretooth Turf Tigers 52", 61", & 72" Deck Mower

| № | Part No. | OEM No. | Description |
|---|---|---|---|
| **Blades for 52" Decks with 5/8" Round Center Hole** | | | |
| 1 | 91-622 | 481707 | Standard-Notch Lift, 18" |
| | 91-637 | 482878 | High-Notch Lift, 18" |
| | 91-623 | 481711 | Extreme High-Notch Lift, 18" |
| | 96-344 | | Gator® G3™, 18" |
| | 596-344 | | Gator G5™, 18" |
| | 396-726 | | Gator G6®, 18" |
| **Blades for 61" Decks with 5/8" Round Center Hole** | | | |
| 1 | 91-638 | 482879 | Standard-Notch Lift, 21" |
| | 91-626 | 481708 | High-Notch Lift, 21" |
| | 91-628 | 481712 | Extreme High-Notch Lift, 21" |
| | 96-347 | | Gator G3, 21" |
| | 596-347 | | Gator G5, 21" |
| | 396-727 | | Gator G6, 21" |
| **Blades for 72" Decks with 5/8" Round Center Hole** | | | |
| 1 | 91-627 | 481709 | Standard-Notch Lift, 24-1/2" |
| | 92-035 | 482882 | High-Notch Lift, 24-1/2" |
| | 96-341 | | Gator G3, 24-1/2" |
| | 596-341 | | Gator G5, 24-1/2" |
| | 396-764 | | Gator G6, 24-1/2" |
| **Replacement Parts** | | | |
| 2 | 82-325 | 46631 | Spindle Assembly, (2004 & Earlier) |
| | | 461663 | Spindle Assembly, (2004 & Later) |
| 3 | 04-125 | 04001-41 | Blade Bolt, fits 46631 Spindle, 5/8-11 x 9-1/2" |
| 4 | | 482295 | Deck Wheel |
| 5 | 72-758 | 481362 | Deck Wheel |
| 6 | | 45944 | Shaft |
| 7 | | 04063-08 | Key, 1/4" x 2" |
| 8 | | 482245 | Spring, Deflector |
| 9 | | 481625-01 | Wing Nut, 3/8-16" |
| 10 | | 48753 | Spindle Pulley, for 61" Deck, 6-11/32 OD |
| | | 48967 | Spindle Pulley, for 72" Deck, 6-15/16 OD |
| 11 | 75-270 | 481557 | Deck Belt, for 52", 5/8" x 123" |
| | 75-681 | 482281 | Deck Belt, for 52", Later Models, 5/8" x 121-1/8" |
| | 75-216 | 481558 | Deck Belt, for 61" Deck, 5/8" x 139-1/4" |
| | | 481980 | Deck Belt, for 72" Deck |
| 12 | | 482416 | Idler Pulley |
| | | 483215 | Idler Pulley, 5-7/8" x 1-3/4" x 3/8" |
| 13 | 78-300 | 48269 | Idler Pulley |
| 14 | | 481597 | Spring, Idler |
| 15 | | 48038 | Deck Roller |
| 16 | | 45944 | Roller Shaft |
| 17 | | 451240 | Shaft |
| 18 | 45-002 | 481022 | Bearing & Race |
| | 49-314 | 481024 | Seal Top |
| | | 481025 | Seal Bottom |
| 19 | | 45389 | Spindle Shaft, for 46631 Spindle |
| 20 | | 48763 | Turnbuckle Eyelet, 5/8" RH Male Thread |
| 21 | | 482486 | Gear Box |
| 22 | | 04020-09 | Nut, 5/8"-11 UNC |
| 23 | 78-003 | 48926 | Pulley Collar, 1-1/8" Bore |

## Scag Super Z 48", 52", & 61" Deck Mower

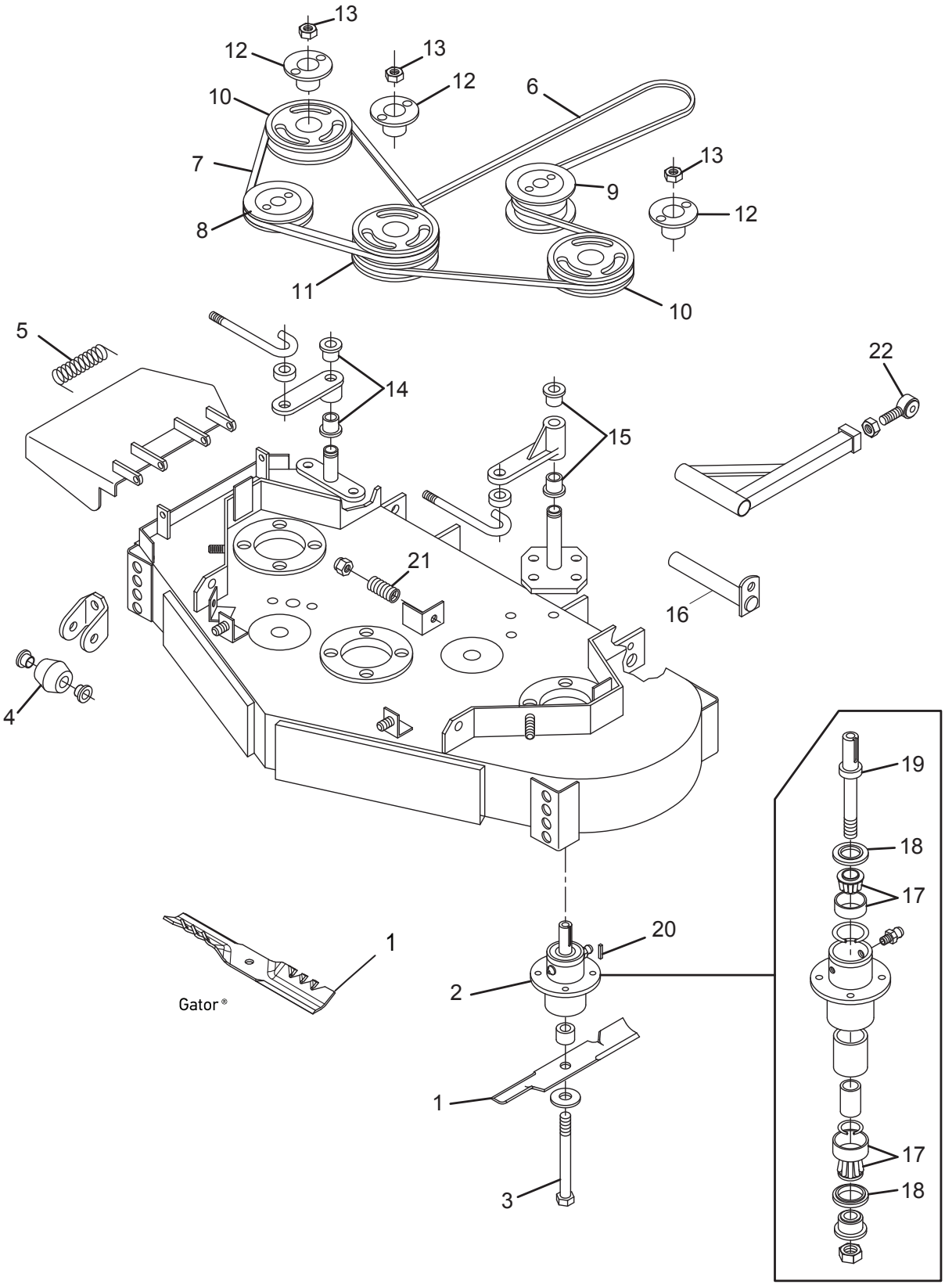

## Scag Super Z 48", 52", & 61" Deck Mower

| № | Part No. | OEM No. | Description |
|---|---|---|---|
| **Blades for 48" Decks with 5/8" Round Center Hole** | | | |
| 1 | 91-620 | 481706 | Standard-Notch Lift, 16-1/2" |
| | 92-145 | 482877 | High-Notch Lift, 16-1/2" |
| | 91-621 | 481710 | Extreme High-Notch Lift, 16-1/2" |
| | 96-344 | | Gator® G3™, 16-1/2" |
| | 396-726 | | Gator G6®, 16-1/2" |
| **Blades for 52" Decks with 5/8" Round Center Hole** | | | |
| 1 | 91-622 | 481707 | Standard-Notch Lift 18" |
| | 91-637 | 482878 | High-Notch Lift, 18" |
| | 91-623 | 481711 | Extreme High-Notch Lift, 18" |
| | 96-344 | | Gator® G3™, 18" |
| | 596-344 | | Gator G5™, 18" |
| | 396-726 | | Gator G6®, 18" |
| **Blades for 61" Decks with 5/8" Round Center Hole** | | | |
| 1 | 91-638 | 482879 | Standard-Notch Lift, 21" |
| | 91-626 | 481708 | High-Notch Lift, 21" |
| | 91-628 | 481712 | Extreme High-Notch Lift, 21" |
| | 96-347 | | Gator G3, 21" |
| | 596-347 | | Gator G5, 21" |
| | 396-727 | | Gator G6, 21" |
| **Replacement Parts** | | | |
| 2 | 82-325 | 46631 | Spindle Assembly |
| 3 | 04-125 | 04001-41 | Blade Bolt, 5/8-11 x 9-1/2" |
| 4 | 72-758 | 481362 | Deck Wheel |
| 5 | | 481050 | Spring, Deflector |
| 6 | 75-904 | 48799 | Deck Drive Belt, for 48" Deck, 5/8" x 115" |
| | | 481001 | Deck Drive Belt, for 52" Cut |
| | 75-370 | 48996 | Deck Drive Belt, for 61" Cut, 5/8" x 135-1/2" |
| 7 | 75-154 | 48087 | Spindle Belt, for 48" Deck, 5/8" x 53-3/8" |
| | 75-048 | 48285 | Spindle Belt, for 52" Deck, 5/8" x 56-1/8" |
| | 75-047 | 48265 | Spindle Belt, for 61" Cut, 5/8" x 63-1/8" |
| 8 | 78-121 | 48181 | Idler Pulley |
| 9 | | 48550 | Idler Pulley |
| 10 | | 48294 | Spindle Pulley, for LH 48" & 52" Cut |
| | | 48753 | Spindle Pulley, for LH 61" Cut |
| | | 48294 | Spindle Pulley, for RH |
| 11 | | 48923 | Spindle Pulley, Double, for 48" & 52" Cut |
| | | 48940 | Spindle Pulley, Double, for 61" Cut |
| 12 | 78-003 | 48926 | Pulley Collar, 1-1/8" Bore |
| 13 | | 04020-09 | Nut, 5/8"-11 UNC |
| 14 | | 48100-05 | Bushing |
| 15 | 48-320 | 48100-02 | Bushing |
| 16 | | 45332 | Shaft |
| 17 | 45-002 | 481022 | Bearing & Race |
| 18 | 49-314 | 481024 | Seal, Top |
| | | 481025 | Seal, Bottom |
| 19 | | 43298 | Spindle Shaft |
| 20 | | 04063-08 | Key, 1/4" x 2" |
| 21 | | 48807 | Spring |
| 22 | | 48763 | Turnbuckle Eyelet, 5/8" RH Male Thread |

## Scag Tiger Cub 48A, 52A Deck Mower

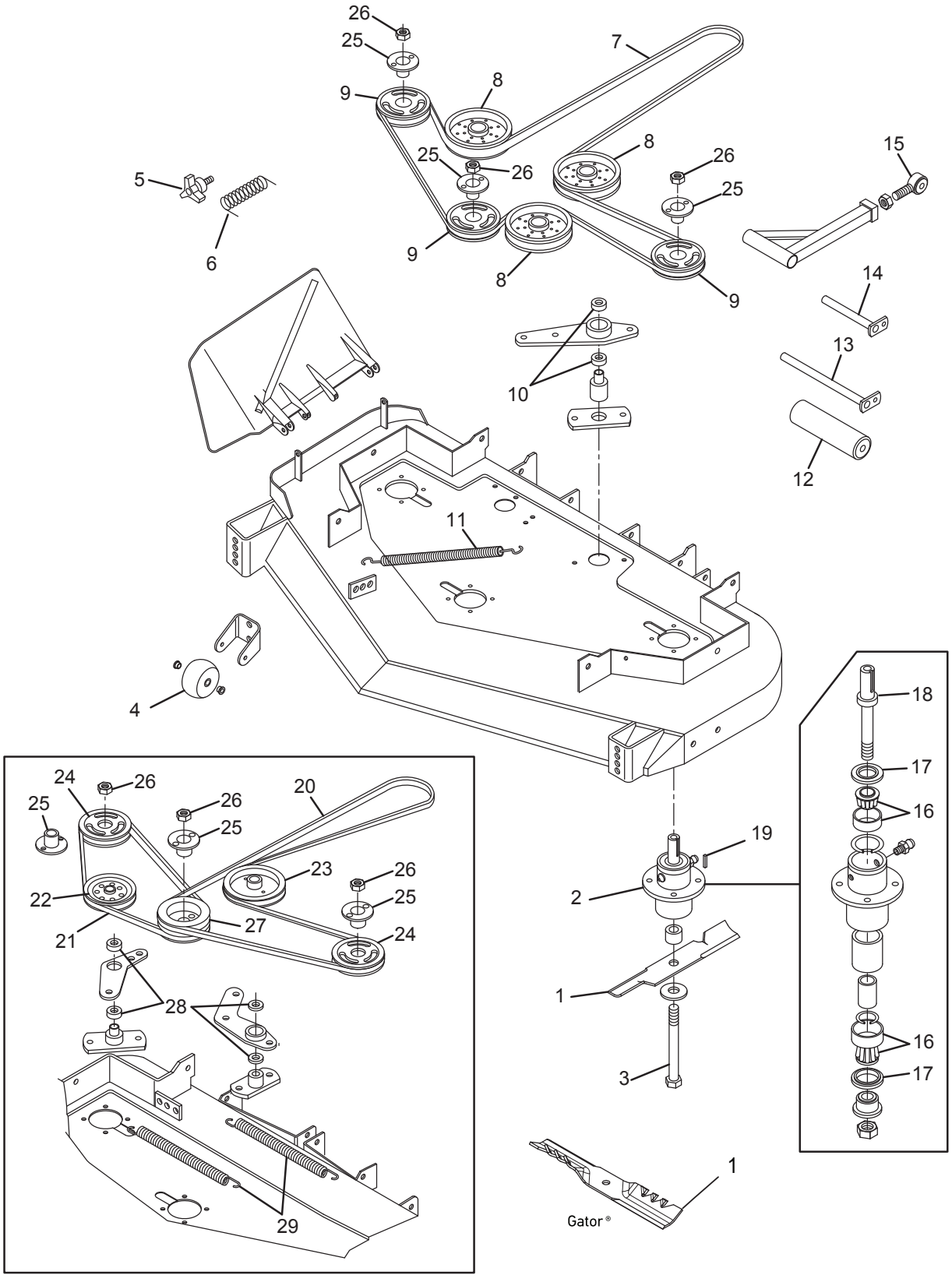

## Scag Tiger Cub 48A, 52A Deck Mower

| № | Part No. | OEM No. | Description |
|---|---|---|---|
| **Blades for 48" Decks with 5/8" Round Center Hole** | | | |
| 1 | 91-620 | 481706 | Standard-Notch Lift, 16-1/2" |
| | 92-145 | 482877 | High-Notch Lift, 16-1/2" |
| | 91-621 | 481710 | Extreme High-Notch Lift, 16-1/2" |
| | 96-344 | | Gator® G3™, 16-1/2" |
| | 396-726 | | Gator G6®, 16-1/2" |
| **Blades for 52" Decks with 5/8" Round Center Hole** | | | |
| 1 | 91-622 | 481707 | Standard-Notch Lift, 18" |
| | 91-637 | 482878 | High-Notch Lift, 18" |
| | 91-623 | 481711 | Extreme High-Notch Lift, 18" |
| | 96-344 | | Gator G3, 18" |
| | 596-344 | | Gator G5™, 18" |
| | 396-726 | | Gator G6, 18" |
| **Replacement Parts** | | | |
| 2 | 82-325 | 46631 | Spindle Assembly |
| 3 | 04-125 | 04001-41 | Blade Bolt, 5/8-11 x 9-1/2" |
| 4 | 72-758 | 481632 | Deck Wheel |
| 5 | | 491625-01 | Wing Nut, 3/8-16 |
| 6 | | 482245 | Spring, Deflector |
| 7 | 75-682 | 482529 | Deck Belt, for 48" Deck, 5/8" x 147-7/8" |
| | 75-629 | 482530 | Deck Belt, for 52" Cut, 5/8" x 155" |
| 8 | | 482416 | Idler Pulley, OD: 5" |
| 9 | | 482148 | Spindle Pulley, for 48" Cut, OD: 4-3/4" |
| | | 481435 | Spindle Pulley, for 52" Cut, OD: 5-3/8" |
| 10 | 45-242 | 48224 | Bearing |
| 11 | | 482718 | Spring, Idler |
| 12 | | 48038 | Deck Roller |
| 13 | | 45944 | Shaft |
| 14 | | 451240 | Shaft |
| 15 | | 48763 | Turnbuckle Eyelet, 5/8" RH Male Thread |
| 16 | 45-002 | 481022 | Bearing & Race |
| 17 | 49-314 | 481024 | Seal, Upper |
| | | 481025 | Seal, Lower |
| 18 | | 43298 | Spindle Shaft |
| 19 | | 04063-08 | Key, 1/4" x 2" |
| 20 | | 482137 | Deck Drive Belt |
| | 75-681 | 482281 | Deck Drive Belt, 5/8" x 121-1/8" |
| 21 | | 482138 | Spindle Belt |
| | | 482140 | Spindle Belt |
| 22 | 34-107 | 482217 | V-Idler Pulley, 5-3/4" x 3/4" x 3/8" |
| 23 | | 481962 | Idler Pulley, OD; 5" |
| 24 | | 482148 | Spindle Pulley, for 48" Cut, OD: 4-3/4" |
| | | 481435 | Spindle Pulley, for 52" Cut, OD: 5-3/8" |
| 25 | 78-003 | 48926 | Pulley Collar, Bore: 1-1/8" |
| 26 | | 04020-09 | Nut, 5/8-11 UNC |
| 27 | | 482149 | Spindle Pulley, Double, for 48" Cut, OD: 4-3/4" |
| | | 482150 | Spindle Pulley, Double, for 52" Cut, OD: 5-3/8" |
| 28 | 45-242 | 48224 | Bearing |

## Scag Tiger Cub 48V & 52V Deck Mower

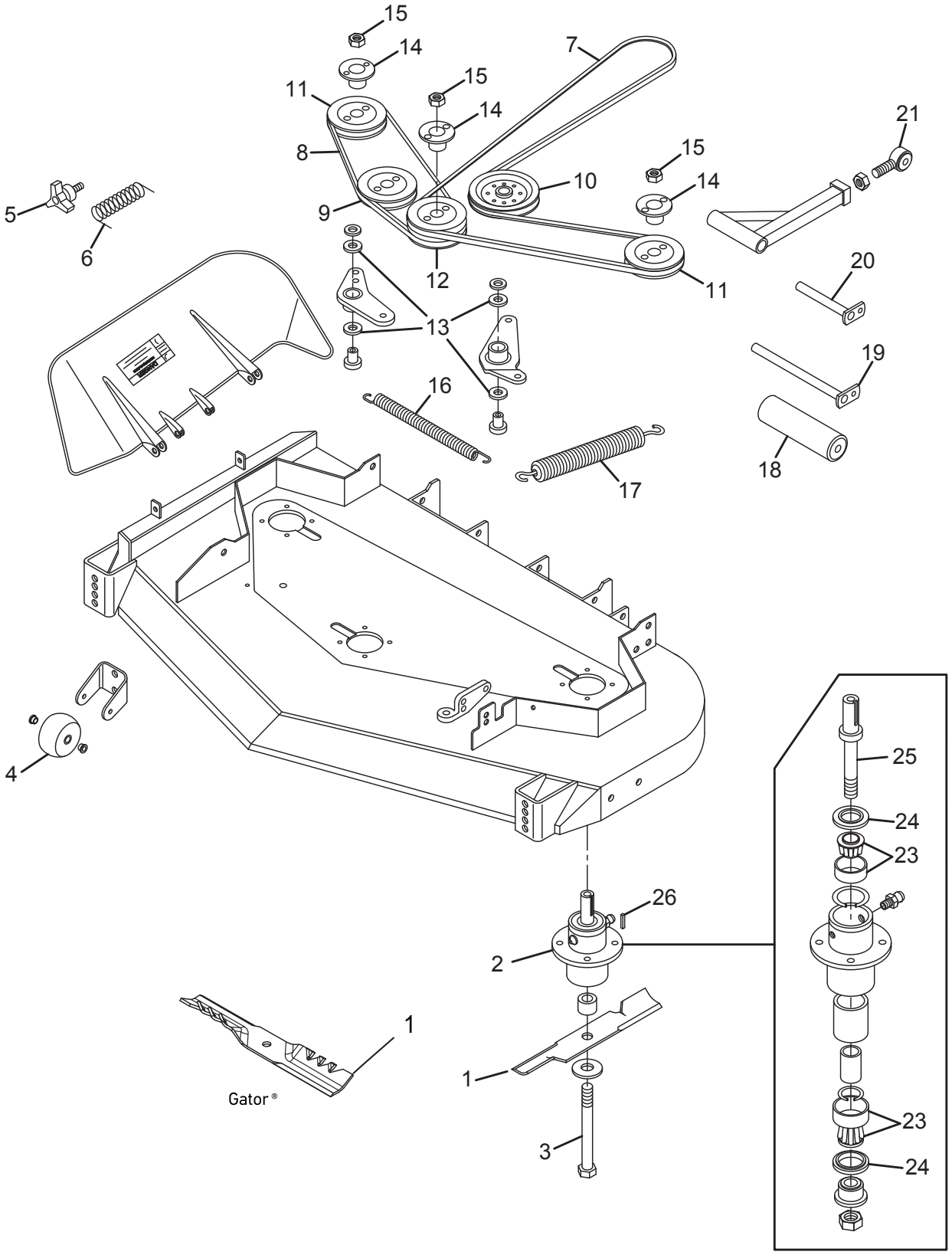

## Scag Tiger Cub 48V & 52V Deck Mower

| № | Part No. | OEM No. | Description |
|---|---|---|---|
| **Blades for 48" Decks with 5/8" Round Center Hole** | | | |
| 1 | 91-620 | 481706 | Standard-Notch Lift, 16-1/2" |
| | 92-145 | 482877 | High-Notch Lift, 16-1/2" |
| | 91-621 | 481710 | Extreme High-Notch Lift, 16-1/2" |
| | 96-344 | | Gator® G3™, 16-1/2" |
| | 396-726 | | Gator G6®, 16-1/2" |
| **Blades for 52" Decks with 5/8" Round Center Hole** | | | |
| 1 | 91-622 | 481707 | Standard-Notch Lift, 18" |
| | 91-637 | 482878 | High-Notch Lift, 18" |
| | 91-623 | 481711 | Extreme High-Notch Lift, 18" |
| | 96-344 | | Gator G3, 18" |
| | 596-344 | | Gator G5™, 18" |
| | 396-726 | | Gator G6, 18" |
| **Replacement Parts** | | | |
| 2 | 82-325 | 461663 | Spindle Assembly |
| 3 | 04-125 | 04001-41 | Blade Bolt, 5/8-11 x 9-1/2" |
| 4 | 72-758 | 481632 | Deck Wheel |
| 5 | | 491625-01 | Wing Nut, 3/8-16 |
| 6 | | 482245 | Spring, Deflector |
| 7 | 75-644 | 483241 | Deck Drive Belt, for 48" Deck, 5/8" x 122-1/8" |
| | 75-645 | 483242 | Deck Drive Belt, for 52" Deck, 5/8" x 125-1/2" |
| 8 | 75-642 | 483239 | Spindle Belt, for 48" Cut, 5/8" x 50-1/4" |
| | | 483240 | Spindle Belt, for 52" Cut, 5/8" x 54-11/16" |
| 9 | 78-121 | 48181 | Idler Pulley, OD: 5" |
| 10 | | 483210 | Idler Pulley, 5-3/4" x 2-5/16" x 3/8" |
| 11 | | 483282 | Spindle Pulley, for 48" Cut, OD: 4-3/4" |
| | | 483284 | Spindle Pulley, for 52" Cut, OD: 5-3/8" |
| 12 | | 483283 | Spindle Pulley, Double |
| | | 483285 | Spindle Pulley, Double |
| 13 | 45-242 | 48224 | Bearing |
| 14 | 78-003 | 48926 | Pulley Collar, Bore: 1-1/8" |
| 15 | | 04020-09 | Nut, 5/8-11 UNC |
| 16 | | 483247 | Spring |
| 17 | | 483246 | Spring |
| 18 | | 48038 | Deck Roller |
| 19 | | 45944 | Shaft |
| 20 | | 451240 | Shaft |
| 21 | | 48763 | Turnbuckle Eyelet, 5/8" RH Male Thread |
| 22 | | 04063-08 | Key, 1/4" x 2" |
| 23 | 45-002 | 481022 | Bearing & Race |
| 24 | 49-314 | 481024 | Seal, Upper |
| 24 | | 481025 | Seal, Lower |
| 25 | | 43589 | Spindle Shaft |

## Scag Tiger Cub 61A Deck Mower

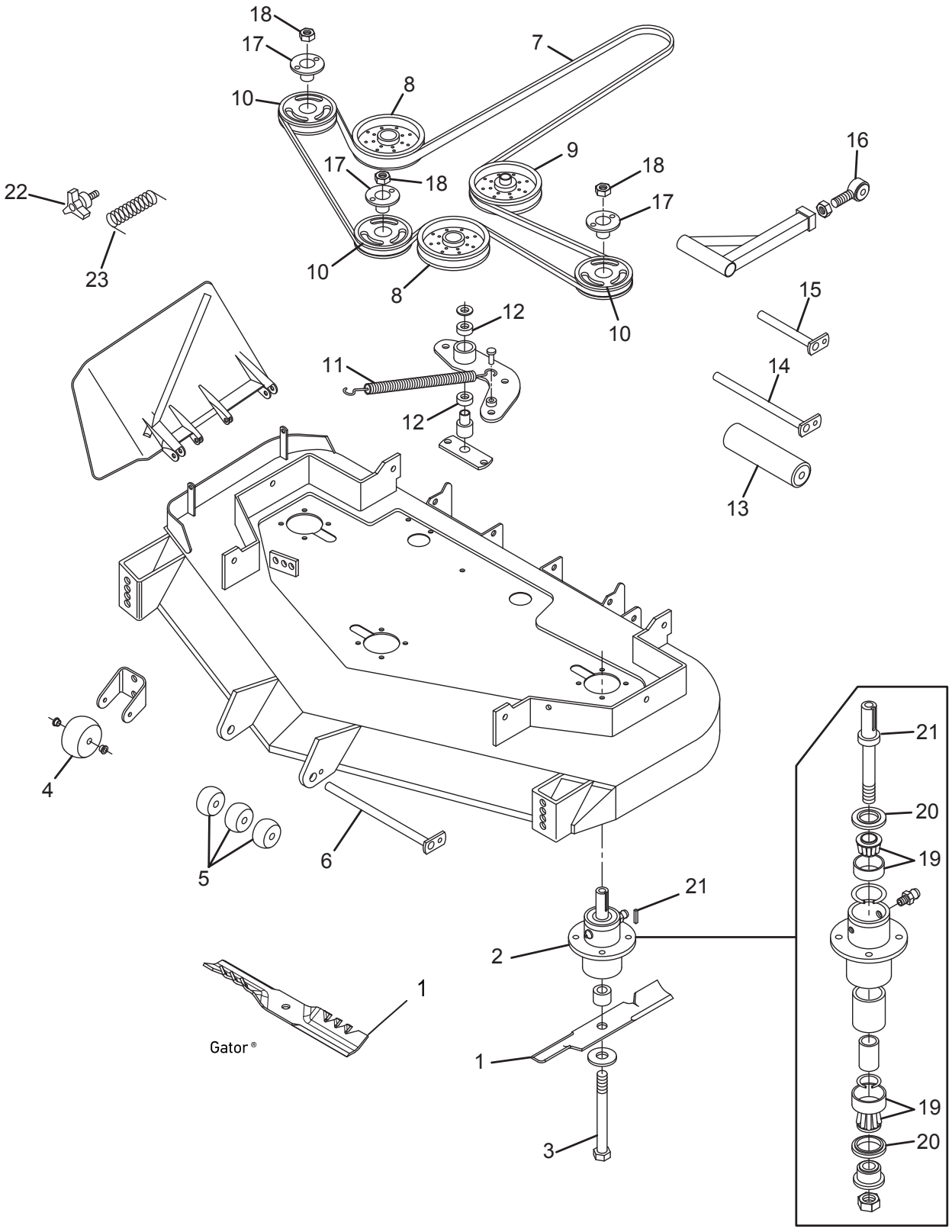

## Scag Tiger Cub 61A Deck Mower

| № | Part No. | OEM No. | Description |
|---|---|---|---|
| **Blades for 61" Decks with 5/8" Round Center Hole** | | | |
| 1 | 91-638 | 482879 | Standard-Notch Lift, 21" |
| | 91-626 | 481708 | High-Notch Lift, 21" |
| | 91-628 | 481712 | Extreme High-Notch Lift, 21" |
| | 96-347 | | Gator® G3™, 21" |
| | 596-347 | | Gator G5™, 21" |
| | 396-727 | | Gator G6®, 21" |
| **Replacement Parts** | | | |
| 2 | 82-325 | 461663 | Spindle Assembly |
| 3 | 04-125 | 04001-41 | Blade Bolt, 5/8-11" x 9-1/2" |
| 4 | 72-758 | 481632 | Deck Wheel |
| 5 | | 482295 | Deck Wheel |
| 6 | | 45944 | Shaft |
| 7 | 75-631 | 482652 | Deck Belt, 5/8" x 175-3/4" |
| 8 | | 482416 | Idler Pulley, OD: 5" |
| 9 | | 482743 | Idler Pulley, OD: 5" |
| 10 | | 48790 | Spindle Pulley |
| 11 | | 482718 | Spring, Idler |
| 12 | 45-242 | 48224 | Bearing |
| 13 | | 48038 | Deck Roller |
| 14 | | 45944 | Shaft |
| 15 | | 451240 | Shaft |
| 16 | | 48763 | Turnbuckle Eyelet, 5/8" RH Male Thread |
| 17 | 78-003 | 48926 | Pulley Collar, Bore: 1-1/8" |
| 18 | | 04020-09 | Nut, 5/8-11 UNC |
| 19 | 45-002 | 481022 | Bearing & Race |
| 20 | 49-314 | 481024 | Seal, Upper |
| | | 481025 | Seal, Lower |
| 21 | | 43589 | Spindle Shaft |
| 22 | | 491625-01 | Wing Nut, 3/8-16 |
| 23 | | 482245 | Spring, Deflector |

## Scag Wildcat 52A & 61A Deck Mower

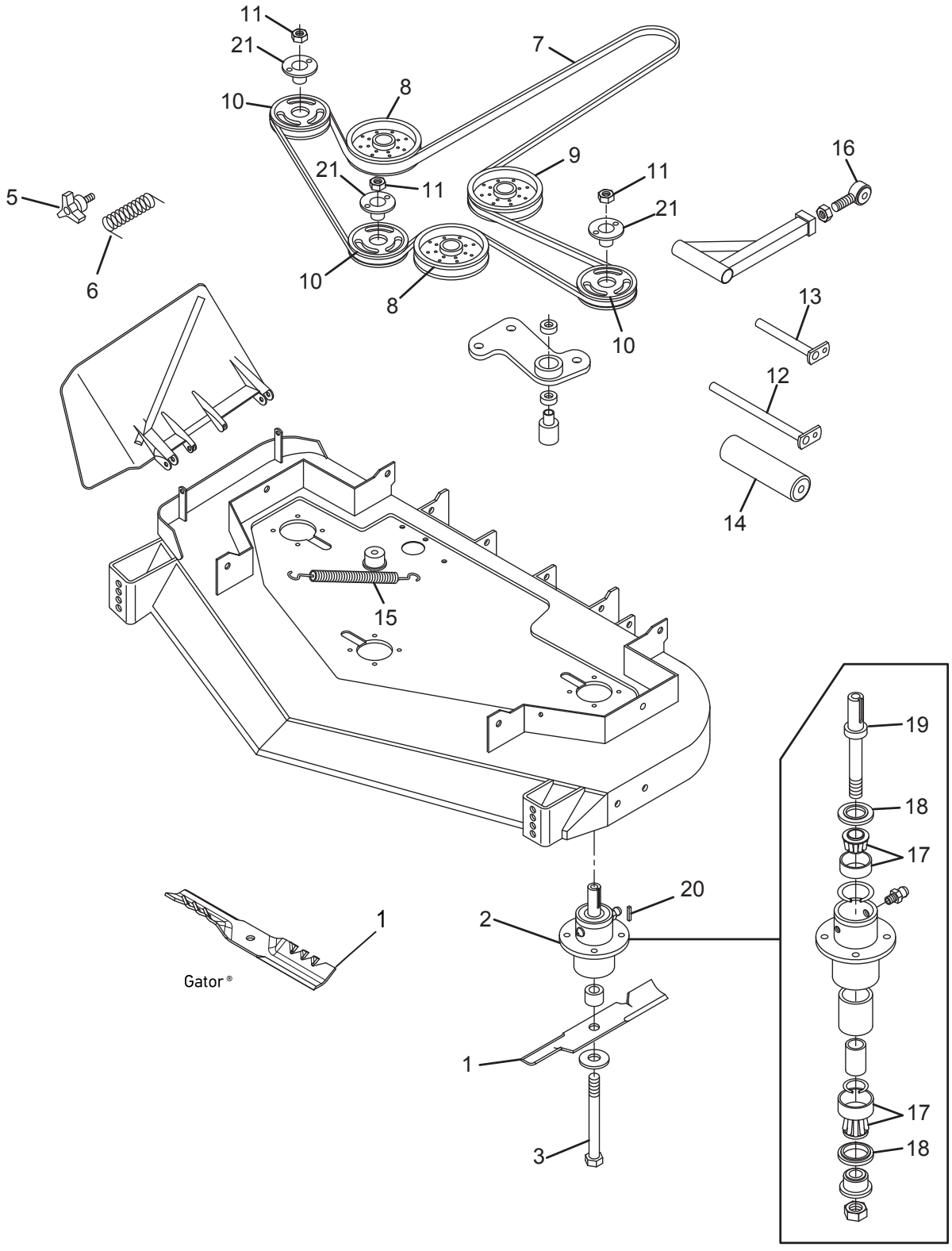

## Scag Wildcat 52A & 61A Deck Mower

| № | Part No. | OEM No. | Description |
|---|---|---|---|
| **Blades for 52" Decks with 5/8" Round Center Hole** | | | |
| 1 | 91-622 | 481707 | Standard-Notch Lift, 18" |
| | 91-637 | 482878 | High-Notch Lift, 18" |
| | 91-623 | 481711 | Extreme High-Notch Lift, 18" |
| | 96-344 | | Gator® G3™, 18" |
| | 596-344 | | Gator G5™, 18" |
| | 396-726 | | Gator G6®, 18" |
| **Blades for 61" Decks with 5/8" Round Center Hole** | | | |
| 1 | 91-638 | 482879 | Standard-Notch Lift, 21" |
| | 91-626 | 481708 | High-Notch Lift, 21" |
| | 91-628 | 481712 | Extreme High-Notch Lift, 21" |
| | 96-347 | | Gator G3, 21" |
| | 596-347 | | Gator G5, 21" |
| | 396-727 | | Gator G6, 21" |
| **Replacement Parts** | | | |
| 2 | 82-325 | 461663 | Spindle Assembly |
| 3 | 04-125 | 04001-41 | Blade Bolt, 5/8-11" x 9-1/2" |
| 4 | 72-758 | 481632 | Deck Wheel |
| 5 | | 491625-01 | Wing Nut, 3/8-16 |
| 6 | | 482245 | Spring, Deflector |
| 7 | 75-629 | 482530 | Deck Drive Belt, for 52" Cut, 5/8" x 155" |
| | 75-631 | 482652 | Deck Drive Belt, for 61" Cut, 5/8" x 175-3/4" |
| 8 | | 482416 | Idler Pulley, OD: 5" |
| 9 | | 482743 | Idler Pulley, OD: 5" |
| 10 | | 482647 | Spindle Pulley, for 52" Cut, OD: 5-3/8" |
| | | 482648 | Spindle Pulley, for 61" Cut, OD: 7" |
| 11 | | 04020-09 | Nut, 5/8-11 UNC |
| 12 | | 45944 | Shaft |
| 13 | | 451240 | Shaft |
| 14 | | 48038 | Deck Roller |
| 15 | | 482718 | Spring, Idler |
| 16 | | 48763 | Turnbuckle Eyelet, 5/8" RH Male Thread |
| 17 | 45-002 | 481022 | Bearing & Race |
| 18 | 49-314 | 481024 | Seal, Upper |
| | | 481025 | Seal, Lower |
| 19 | | 43589 | Spindle Shaft |
| 20 | | 04063-08 | Key, 1/4" x 2" |
| 21 | 78-003 | 48926 | Pulley Collar, Bore: 1-1/8" |
| 22 | | 482295 | Deck Wheel, for 61" Cut |
| 23 | | 45944 | Shaft, for 61" Cut |

## Scag Wildcat 52V Deck Mower

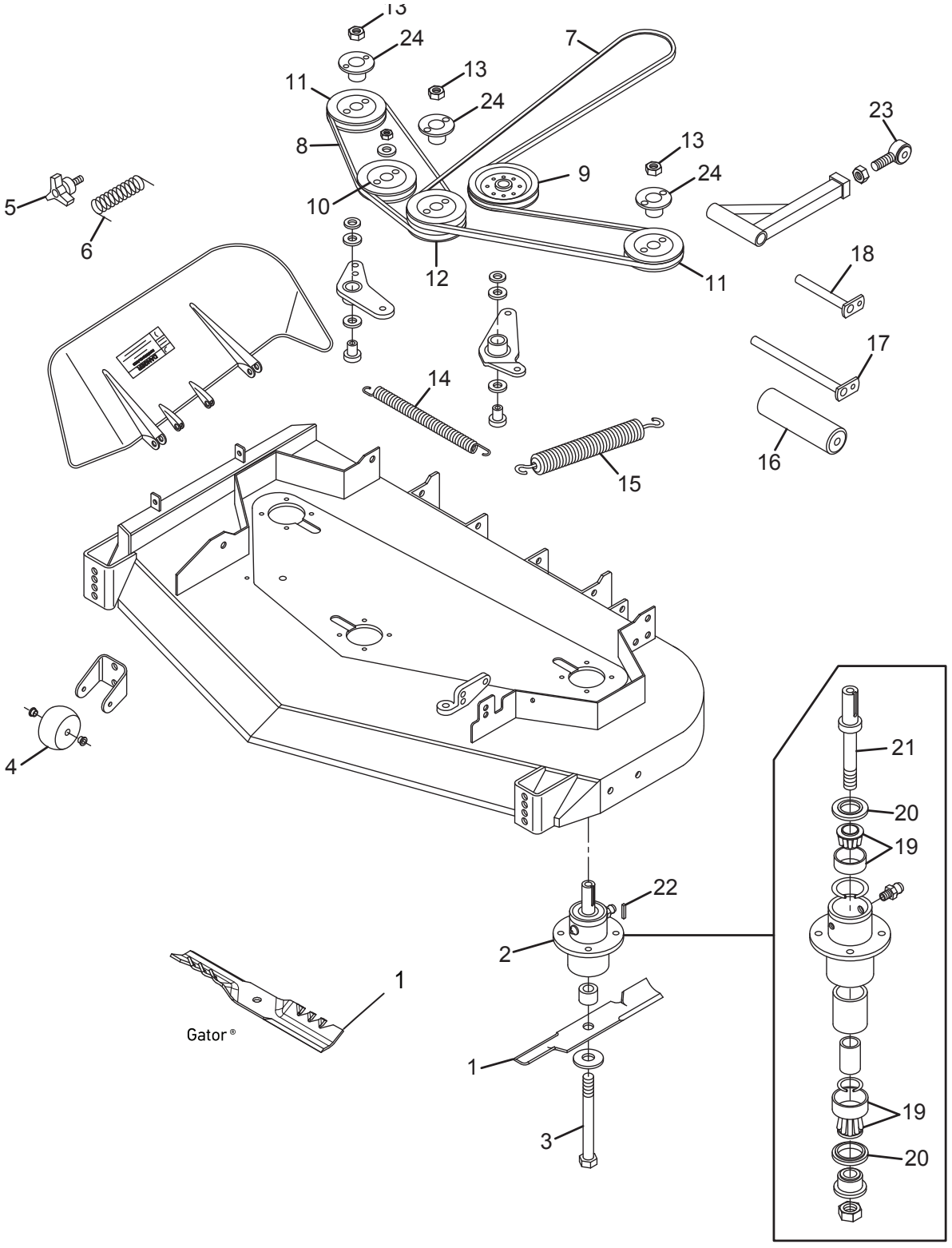

## Scag Wildcat 52V Deck Mower

| № | Part No. | OEM No. | Description |
|---|---|---|---|
| **Blades for 52" Decks with 5/8" Round Center Hole** | | | |
| 1 | 91-622 | 481707 | Standard-Notch Lift, 18" |
| | 91-637 | 482878 | High-Notch Lift, 18" |
| | 91-623 | 481711 | Extreme High-Notch Lift, 18" |
| | 96-344 | | Gator® G3™, 18" |
| | 596-344 | | Gator G5™, 18" |
| | 396-726 | | Gator G6®, 18" |
| **Replacement Parts** | | | |
| 2 | 82-325 | 461663 | Spindle Assembly |
| 3 | | 04001-41 | Blade Bolt, 5/8-11" x 9-1/2" |
| 4 | | 481632 | Deck Wheel |
| 5 | | 491625-01 | Wing Nut, 3/8-16 |
| 6 | | 482245 | Spring, Deflector |
| 7 | 75-645 | 483242 | Deck Drive Belt, for 52" Cut, 5/8" x 125-1/2" |
| 8 | | 483240 | Spindle Belt, for 52" Cut, 5/8" x 54-11/16" |
| 9 | | 483210 | Idler Pulley, 5-3/4" x 2-5/16" x 3/8" |
| 10 | 78-121 | 48181 | Idler Pulley, OD: 5" |
| 11 | | 483284 | Spindle Pulley, for 52" Cut, OD: 5-3/8" |
| 12 | | 483285 | Spindle Pulley, Double, for 52" Cut |
| 13 | | 04020-09 | Nut, 5/8-11 UNC |
| 14 | | 483247 | Spring, Idler, RH |
| 15 | | 483246 | Spring, Idler, LH |
| 16 | | 48038 | Deck Roller |
| 17 | | 45944 | Shaft |
| 18 | | 451240 | Shaft |
| 19 | 45-002 | 481022 | Bearing & Race |
| 20 | 49-314 | 481024 | Seal, Upper |
| | | 481025 | Seal, Lower |
| 21 | | 43589 | Spindle Shaft |
| 22 | | 04063-08 | Key, 1/4" x 2" |
| 23 | | 48763 | Turnbuckle Eyelet, 5/8" RH Male Thread |
| 24 | 78-003 | 48926 | Pulley, with Collar, Bore: 1-1/8" |

## Scag Wildcat 61V Deck Mower

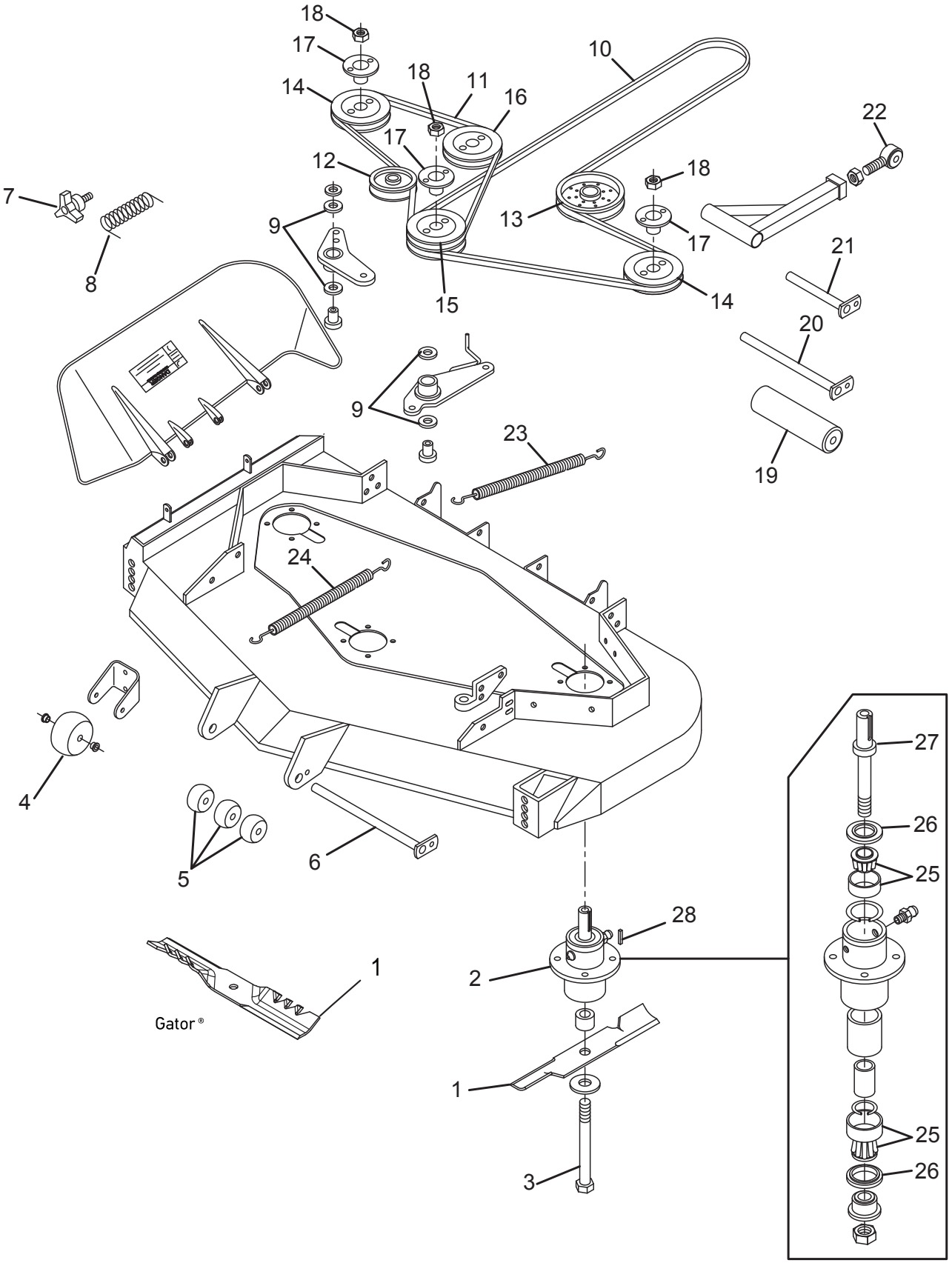

## Scag Wildcat 61V Deck Mower

| № | Part No. | OEM No. | Description |
|---|---|---|---|
| **Blades for 61" Decks with 5/8 " Round Center Hole** | | | |
| 1 | 91-638 | 482879 | Standard-Notch Lift, 21" |
| | 91-626 | 481708 | High-Notch Lift, 21" |
| | 91-628 | 481712 | Extreme High-Notch Lift, 21" |
| | 96-347 | | Gator® G3™, 21" |
| | 596-347 | | Gator G5™, 21" |
| | 396-727 | | Gator G6®, 21" |
| **Replacement Parts** | | | |
| 2 | 82-325 | 461663 | Spindle Assembly |
| 3 | 04-125 | 04001-41 | Blade Bolt, 5/8-11" x 9-1/2" |
| 4 | 72-758 | 481632 | Deck Wheel |
| 5 | | 482295 | Deck Wheel |
| 6 | | 45944 | Shaft |
| 7 | | 491625-01 | Wing Nut, 3/8"-16 |
| 8 | | 482245 | Spring, Deflector |
| 9 | 45-242 | 48224 | Bearing |
| 10 | 75-646 | 483243 | Deck Drive Belt, 5/8" x 135-3/4" |
| 11 | 75-637 | 483157 | Spindle Belt, 5/8" x 65-3/16" |
| 12 | | 483415 | Idler Pulley, OD: 3-1/2" |
| 13 | | 483210 | Idler Pulley, 5-3/4" x 2-5/16" x 3/8" |
| 14 | | 483286 | Spindle Pulley |
| 15 | | 483287 | Spindle Pulley, Double |
| 16 | 78-121 | 48181 | Idler Pulley, OD: 5" |
| 17 | 78-003 | 48926 | Pulley, with Collar, Bore: 1-1/8" |
| 18 | | 04020-09 | Nut, 5/8"-11 UNC |
| 19 | | 48038 | Deck Roller |
| 20 | | 45944 | Shaft |
| 21 | | 451240 | Shaft |
| 22 | | 48763 | Turnbuckle Eyelet, 5/8" RH Male Thread |
| 23 | | 483246 | Spring, LH |
| 24 | | 482797 | Spring, RH |
| 25 | 45-002 | 481022 | Bearing & Race |
| 26 | 49-314 | 481024 | Seal, Upper |
| 26 | | 481025 | Seal, Lower |
| 27 | | 43589 | Spindle Shaft |
| 28 | | 04063-08 | Key, 1/4" x 2" |

## Scag 32", 48", 52" & 61" Hydraulic Walk-Behind Mowers

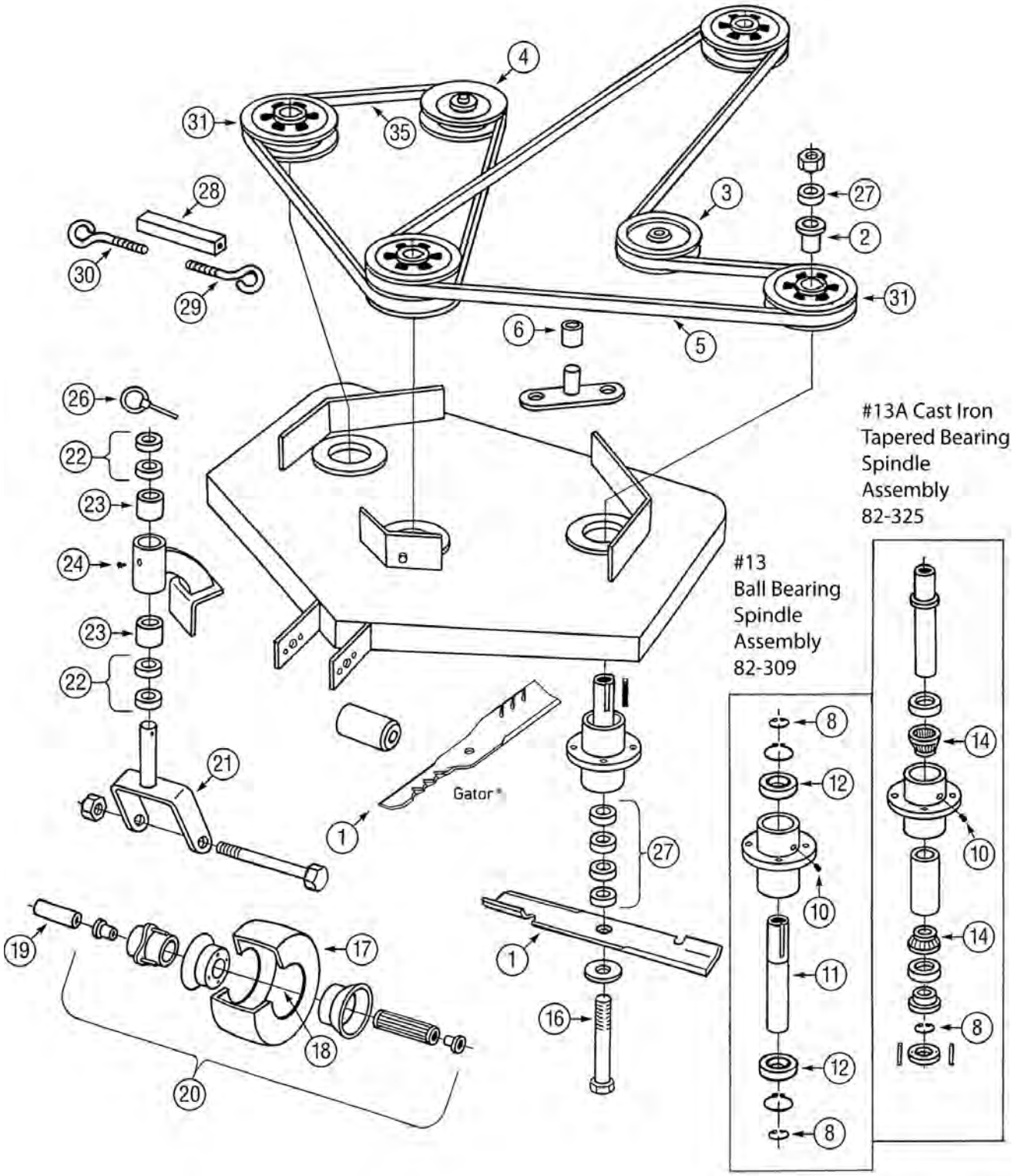

## Scag 32", 48", 52", & 61" Hydraulic Walk-Behind Mowers

| № | Part No. | OEM No. | Description |
|---|---|---|---|
| **Blades for 32" Decks with 5/8" Round Center Hole** | | | |
| | 91-620 | 481706 | Standard-Notch Lift, 16-1/2" |
| | 92-145 | 482877 | High-Notch Lift, 16-1/2" |
| 1 | 91-621 | 481710 | Extreme High-Notch Lift, 16-1/2" |
| | 96-344 | | Gator® G3™, 16-1/2" |
| | 396-726 | | Gator G6®, 16-1/2" |
| **Blades for 48" Decks with 5/8" Round Center Hole** | | | |
| | 91-620 | 481706 | Standard-Notch Lift, 16-1/2" |
| | 92-145 | 482877 | High-Notch Lift, 16-1/2" |
| 1 | 91-621 | 481710 | Extreme High-Notch Lift, 16-1/2" |
| | 96-344 | | Gator G3, 16-1/2" |
| | 396-726 | | Gator G6, 16-1/2" |
| **Blades for 52" Decks with 5/8" Round Center Hole** | | | |
| | 91-622 | 481707 | Standard-Notch Lift, 18" |
| | 91-637 | 482878 | High-Notch Lift, 18" |
| 1 | 91-623 | 481711 | Extreme High-Notch Lift, 18" |
| | 96-344 | | Gator G3, 18" |
| | 596-344 | | Gator G5™, 18" |
| | 396-726 | | Gator G6, 18" |
| **Blades for 61" Decks with 5/8" Round Center Hole** | | | |
| | 91-638 | 482879 | Standard-Notch Lift, 21" |
| | 91-626 | 481708 | High-Notch Lift, 21" |
| 1 | 91-628 | 481712 | Extreme High-Notch Lift, 21" |
| | 96-347 | | Gator G3, 21" |
| | 596-347 | | Gator G5, 21" |
| | 396-727 | | Gator G6, 21" |
| **Replacement Parts** | | | |
| 2 | 78-003 | 48926 | Bushing, for Pulley, ID: 1-1/8" |
| 3 | 78-300 | 48269 | Idler Pulley |
| 4 | 78-121 | 48181 | V-Belt, for Idler Pulley |
| | 75-054 | 48204 | Drive Belt, for 36" Deck, 5/8" x 82-5/16" |
| 5 | 75-055 | 48089 | Drive Belt, for 48" Deck, 5/8" x 89-1/4" |
| | 75-058 | 48286 | Drive Belt, for 52" Deck, 5/8" x 93-1/4" |
| 6 | | 48100-05 | Bronze Bushing |
| 8 | | 04050-04 | Snap Ring |
| 10 | 02-010-1 | 48112-02 | Grease Fitting |
| 11 | 82-305 | 43001-02 | Spindle Shaft |
| 12 | | 48101-01 | Bearing, Heavy-Duty |
| 13 | | 46020 | Ball Bearing, Spindle Assembly |
| 13A | 82-325 | | Spindle Assembly |
| 14 | 45-002 | 48668 | Taper Bearing |
| 16 | 04-125 | 04001-41 | Blade Bolt |
| 17 | 58-131 | 48006-02 | Tire, 9" x 350-4 |
| 18 | 71-274 | 48006-03 | Tire Tube |
| 19 | 45-188 | 43022 | Spanner Bushing |
| 20 | 72-795 | 48006-01 | Complete Assembly |
| 21 | 48-202 | 45006 | Caster Fork |
| 22 | 09-804 | 43037-01 | Spacer, 1/2" |
| 23 | 45-127 | 48100-01 | Bronze Bearing |
| 24 | 02-010-1 | 48114-01 | Grease Fitting |
| 26 | 02-446 | 04066-01 | Linchpin, 7/16" |
| 27 | 48-141 | 43038 | Spacer, for #13 Assembly |
| 28 | 48-006 | 43025 | Turnbuckle |
| 29 | | 04070-02 | Eyebolt, for LH Threads, 5/16"-18 |
| 30 | | 0407-01 | Eyebolt, for RH Threads, 5/16"-18 |
| 31 | 78-642 | 48127-01 | Deck Pulley |
| | 75-154 | 48087 | Blade Belt, for 48" Cut, 5/8" x 53-3/8" |
| 35 | 75-048 | 48285 | Blade Belt, for 52" Cut, 5/8" x 56-1/8" |
| | 75-047 | 48265 | Blade Belt, for 61" Cut, 5/8" x 63-1/8" |

## Scag SM-52

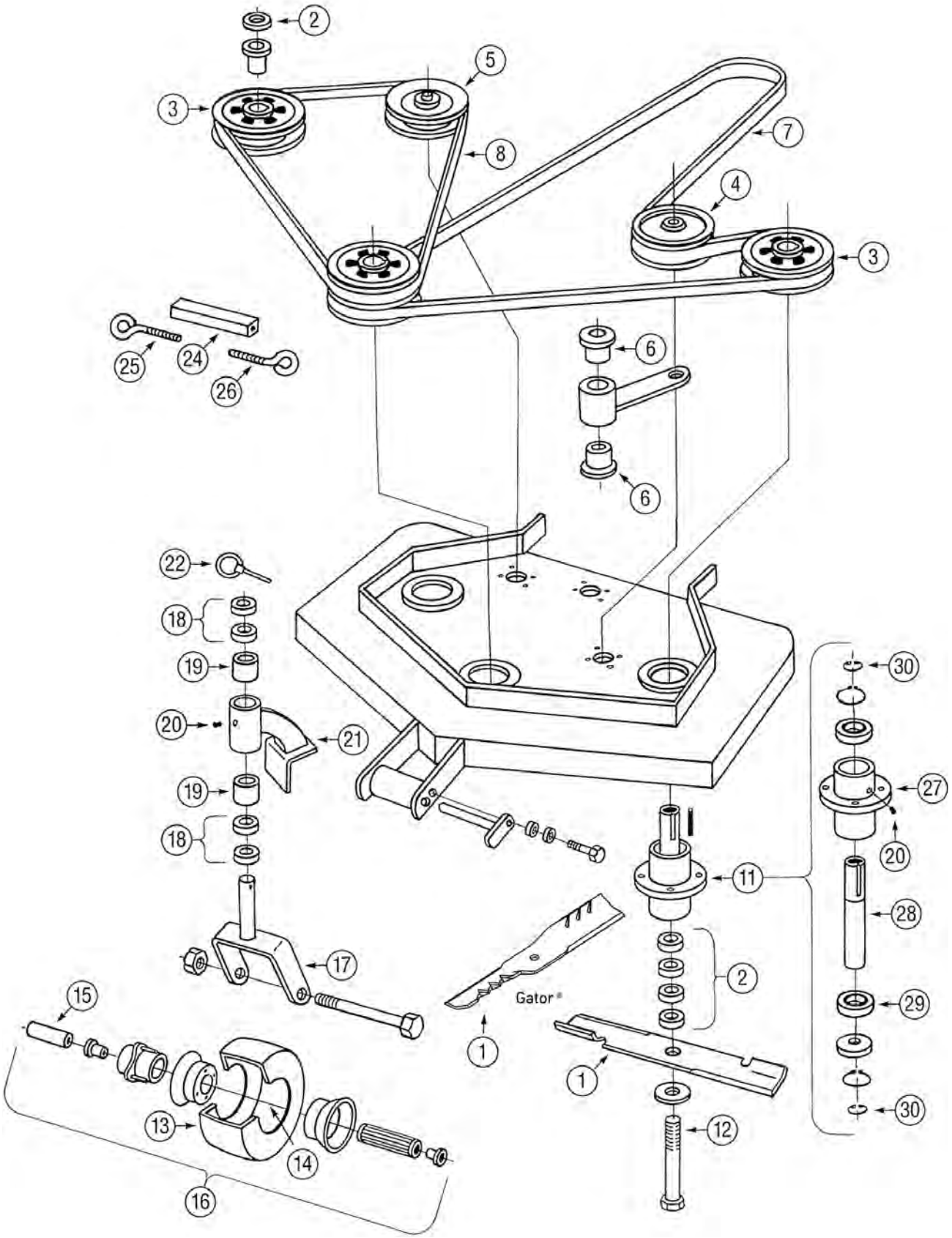
2
5
3
8
7
4
3
25
24
26
6
6
22
18
19
20
21
19
18
17
15
13
14
16
Gator®
1
1
11
2
12
30
27
20
28
29
30

## Scag SM-52

| № | Part No. | OEM No. | Description |
|---|---|---|---|
| **Blades for 52" Decks with 5/8 " Round Center Hole** | | | |
| 1 | 91-622 | 481707 | Standard-Notch Lift, 18" |
| | 91-637 | 482878 | High-Notch Lift, 18" |
| | 91-623 | 481711 | Extreme High-Notch Lift, 18" |
| | 96-344 | | Gator® G3™, 18" |
| | 596-344 | | Gator G5™, 18" |
| | 396-726 | | Gator G6®, 18" |
| **Replacement Parts** | | | |
| 2 | 48-141 | 43278 | Spacer, 1/4" |
| 3 | 78-642 | 48127-01 | Deck Pulley |
| 4 | 78-300 | 48269 | Idler Pulley |
| 5 | 78-121 | 48181 | V-Groove Idler Pulley |
| 6 | 48-320 | 48100-02 | Bushing |
| 7 | 75-503 | 48530 | Drive Belt, for 52" Cut, 5/8" x 103" |
| 8 | 75-048 | 48285 | Blade Belt, for small 52", 5/8" x 56-1/8" |
| 11 | | 46020 | Spindle Assembly |
| 12 | 04-125 | 0402-09 | Blade Bolt |
| 13 | 58-131 | 48006-02 | Tire, 9" x 350-4 |
| 14 | 71-274 | 48006-03 | Tire Tube |
| 15 | 45-188 | 43022 | Spanner Bushing |
| 16 | 72-795 | 48006-01 | Wheel Assembly |
| 17 | 48-202 | 45006 | Caster Fork |
| 18 | 09-804 | 43037-01 | Spacer, 1/2" |
| 19 | 45-127 | 48100-01 | Bushing |
| 20 | 02-010-1 | 48114-01 | Grease Fitting |
| 22 | 02-446 | 04066-01 | Linchpin, 7/16" |
| 24 | 48-006 | 43025 | Turnbuckle Link |
| 25 | | 04070-01 | Eyebolt, RH Thread |
| 26 | | 04070-02 | Eyebolt, LH Thread |
| 28 | 82-305 | 43001-02 | Spindle Shaft |
| 29 | | 48101-01 | Bearing, Heavy-Duty |
| 30 | | 04050-04 | Snap Ring |

## Scag SM-61, SM-72 Cutter Decks

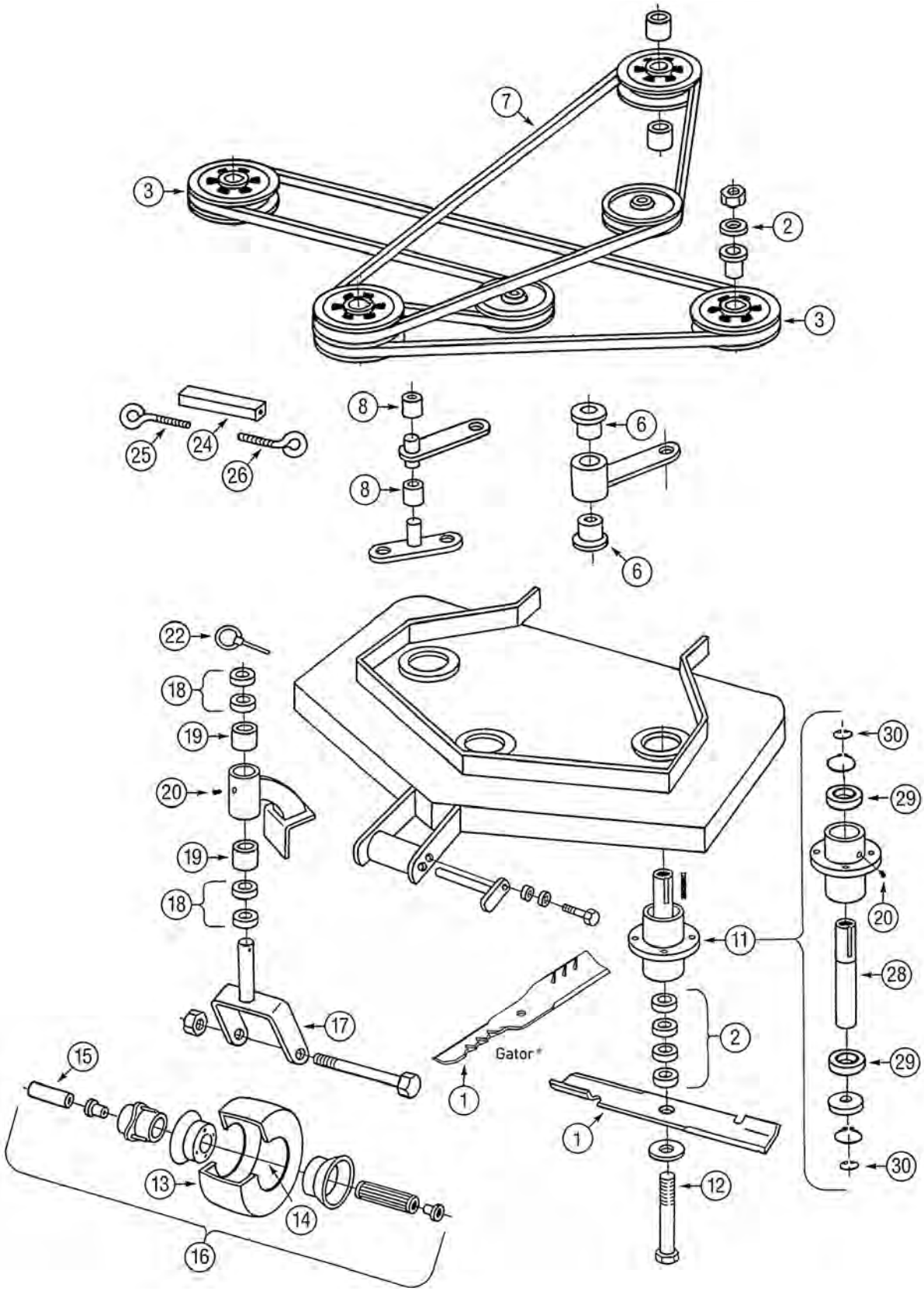

## Scag SM-61, SM-72 Cutter Decks

| № | Part No. | OEM No. | Description |
|---|---|---|---|
| **Blades for 61" Decks with 5/8" Round Center Hole** | | | |
| 1 | 91-638 | 482879 | Standard-Notch Lift, 21" |
| | 91-626 | 481708 | High-Notch Lift, 21" |
| | 91-628 | 481712 | Extreme High-Notch Lift, 21" |
| | 96-347 | | Gator® G3™, 21" |
| | 596-347 | | Gator G5™, 21" |
| | 396-727 | | Gator G6®, 21" |
| **Blades for 72" Decks with 5/8 " Round Center Hole** | | | |
| 1 | 91-627 | 481709 | Standard-Notch Lift, 24-1/2" |
| | 92-035 | 482882 | High-Notch Lift, 24-1/2" |
| | 96-341 | | Gator G3, 24-1/2" |
| | 596-341 | | Gator G5, 24-1/2" |
| | 396-764 | | Gator G6, 24-1/2" |
| **Replacement Parts** | | | |
| 2 | 48-141 | 43278 | Spacer, 1/4" |
| 3 | 78-642 | 48127-01 | Deck Pulley |
| 6 | 48-320 | 48100-02 | Bushing |
| 7 | 75-594 | 48359 | Drive Belt, for 72" Cut, 5/8" x 94" |
| | 75-036 | 48083 | Drive Belt, for 61" Cut, 5/8" x 88-7/8" |
| 8 | | 48100-05 | Bushing |
| 11 | | 46020 | Spindle Assembly |
| 12 | 04-125 | 0402-09 | Blade Bolt |
| 13 | 58-131 | 48006-02 | Tire, 9" x 350-4 |
| 14 | 71-274 | 48006-03 | Tire Tube |
| 15 | 45-188 | 43022 | Spanner Bushing |
| 16 | 72-795 | 48006-01 | Wheel Assembly |
| 17 | 48-202 | 45006 | Caster Fork |
| 18 | 09-804 | 43037-01 | Spacer, 1/2" |
| 19 | 45-127 | 48100-01 | Bushing |
| 20 | 02-010-1 | 48114-01 | Grease Fitting |
| 22 | 02-446 | 04066-01 | Linchpin, 7/16" |
| 24 | 48-006 | 43025 | Turnbuckle Link |
| 25 | | 04070-01 | Eyebolt, RH Thread |
| 26 | | 04070-02 | Eyebolt, LH Thread |
| 28 | 82-305 | 43001-02 | Spindle Shaft |
| 29 | | 48101-01 | Bearing, Heavy-Duty |
| 30 | | 04050-04 | Snap Ring |

## Scag 61" & 72" Hydraulic Drive 3-Wheel Rider

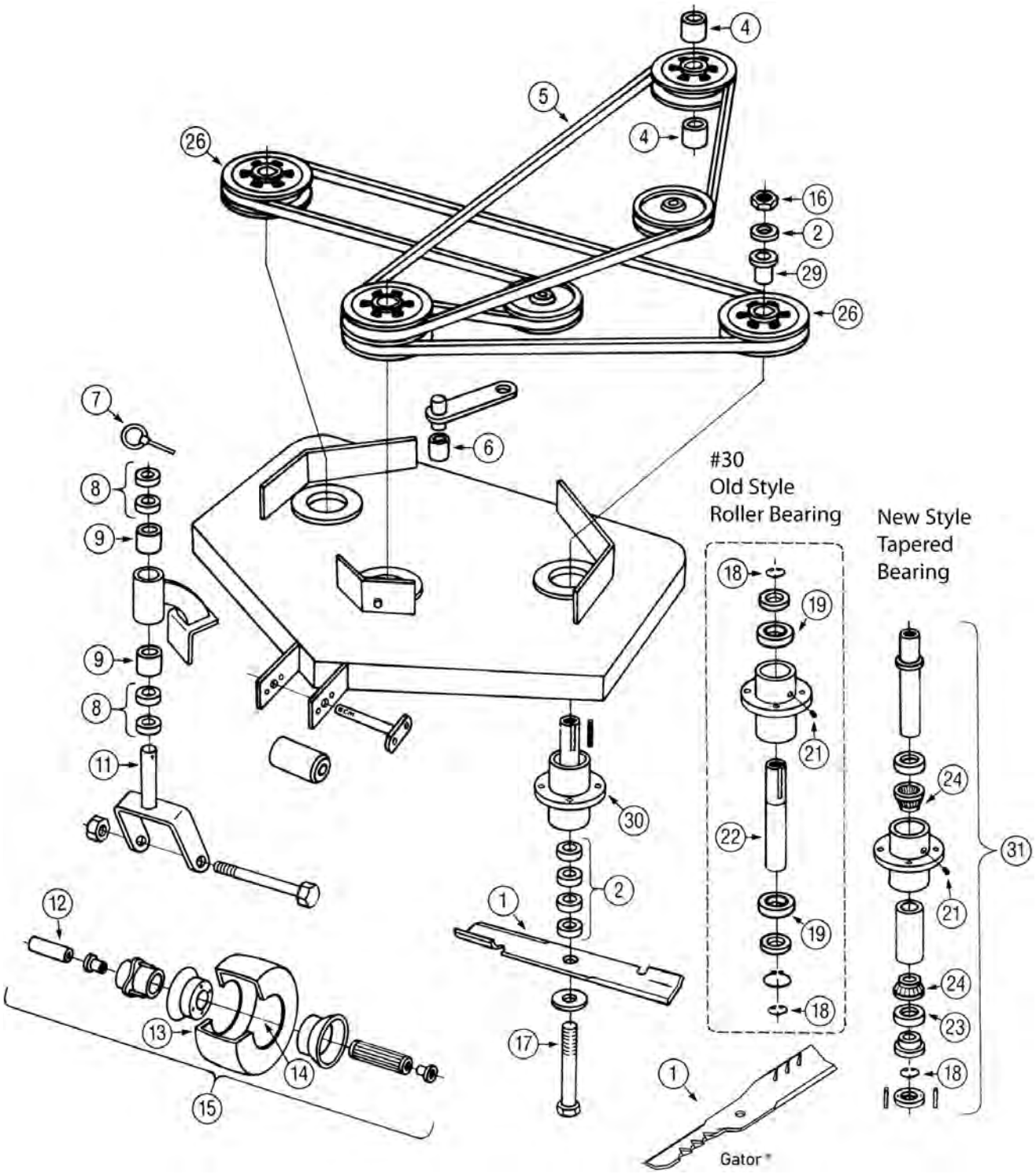

## Scag 61" & 72" Hydraulic Drive 3-Wheel Rider

| № | Part No. | OEM No. | Description |
|---|---|---|---|
| **Blades for 61" Decks with 5/8" Round Center Hole** | | | |
| 1 | 91-638 | 482879 | Standard-Notch Lift, 21" |
| | 91-626 | 481708 | High-Notch Lift, 21" |
| | 91-628 | 481712 | Extreme High-Notch Lift, 21" |
| | 96-347 | | Gator® G3™, 21" |
| | 596-347 | | Gator G5™, 21" |
| | 396-727 | | Gator G6®, 21" |
| **Blades for 72" Decks with 5/8" Round Center Hole** | | | |
| 1 | 91-627 | 481709 | Standard-Notch Lift, 24-1/2" |
| | 92-035 | 482882 | High-Notch Lift, 24-1/2" |
| | 96-341 | | Gator G3, 24-1/2" |
| | 596-341 | | Gator G5, 24-1/2" |
| | 396-764 | | Gator G6, 24-1/2" |
| **Replacement Parts** | | | |
| 2 | 09-802 | 43038 | Blade Spacer, 1/4" |
| 4 | 45-257 | 48102 | Bearing |
| 5 | 75-594 | 48359 | Engine-to-Deck Belt, for 72", 5/8" x 94" |
| | 75-036 | 48083 | Engine-to-Deck Belt, for 61", 5/8" x 88-7/8" |
| 6 | | 48100-05 | Bronze Bearing |
| 7 | 02-446 | 04066-01 | Linchpin, 7/16" |
| 8 | 09-804 | 43037-01 | Spacer, Thickness: 1/2" |
| 9 | 45-127 | 48100-01 | Bronze Bearing |
| 11 | 48-202 | 45006 | Caster Yoke |
| 12 | 45-188 | 43022 | Spanner Bushing |
| 13 | 72-795 | 48307-01 | Tire, 410/350-4 |
| 14 | 71-274 | 48006-03 | Tire Tube |
| 15 | 72-795 | 46079 | Complete Wheel Assembly |
| 16 | | 04020-09 | Hex Nut |
| 17 | 04-125 | 04001-41 | Hex Bolt |
| 18 | | 04050-04 | Retaining Ring, Small |
| 19 | 45-220 | 48101-02 | Spindle Bearing, Heavy-Duty |
| 21 | 02-010-1 | 48114-02 | Grease Fitting |
| 22 | 82-305 | 43001-02 | Spindle Shaft |
| 24 | 45-002 | 48668 | Tapered Bearing |
| 26 | 78-642 | 48127 | Spindle Pulley |
| 30 | | 46020 | Spindle Assembly |
| 31 | 82-325 | | Spindle Assembly, Cast Iron |

## Honda GX160

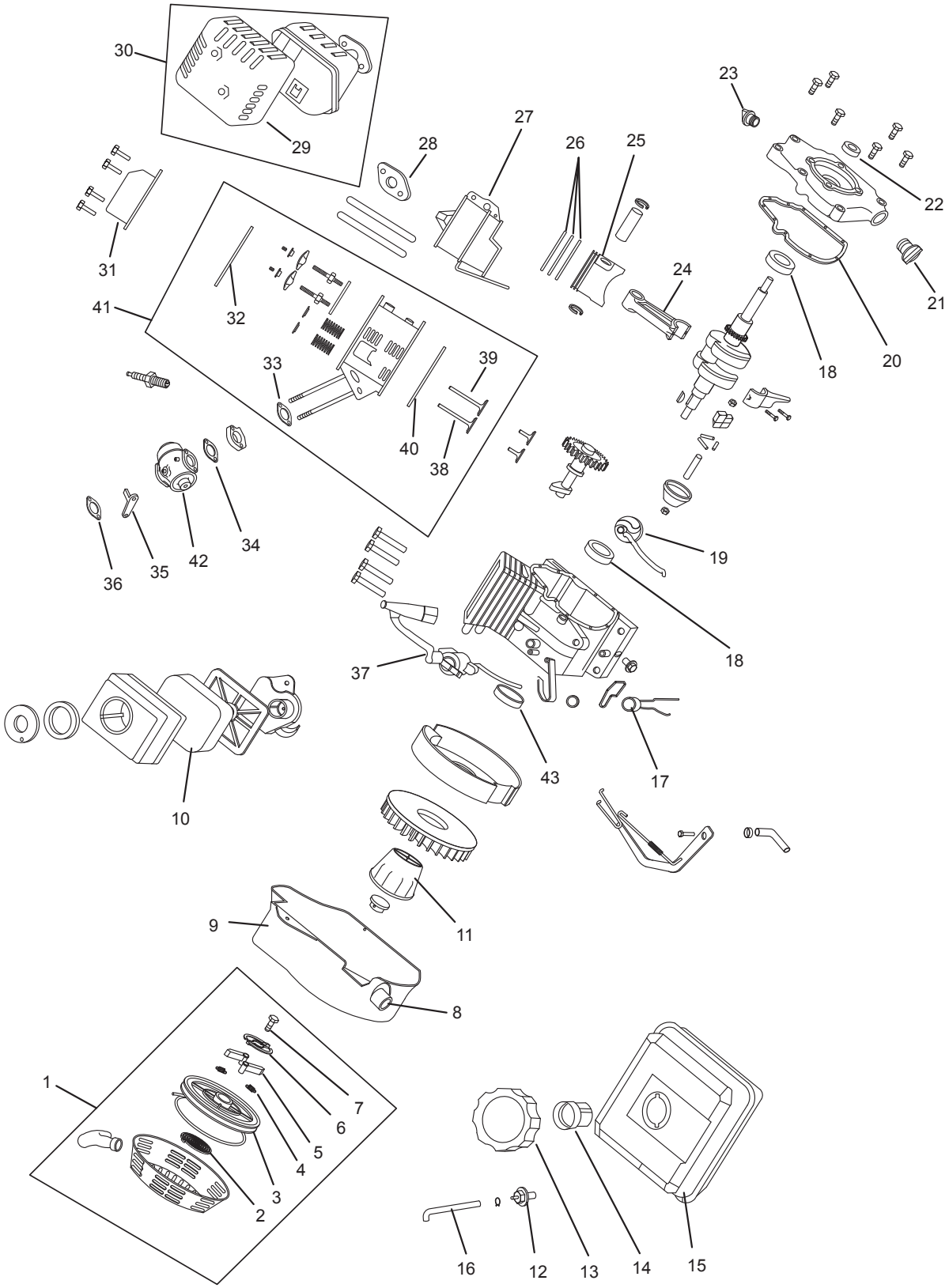
30
29
28
27
26
25
23
22
31
41
32
24
21
33
39
18
20
40
38
34
42
35
36
19
18
37
43
17
10
11
9
8
1
7
6
5
4
3
2
16
12
13
14
15

## Honda GX160

| № | Part No. | OEM No. | Description |
|---|---|---|---|
| 1 | 31-052 | 28400-ZH8-013ZA | Starter Assembly, New Style |
| 2 | 43-425 | 28442-ZH8-003 | Starter Spring |
| 3 | 31-023 | 28420-ZH8-013 | Starter Pulley |
| 4 | 31-058 | 28443-ZH8-003 | Starter Pawl Spring |
| 5 | 31-025 | 28422-ZH8-013 | Starter Pawl |
| 6 | 31-027 | 28433-ZH8-003 | Starter Pawl Retainer |
| 7 | 31-028 | 90003-ZH8-003 | Starter Center Screw |
| 8 | 33-013 | 36100-ZE1-015 | Switch, On/Off |
| 9 | | 19610-ZE1-000ZA | Blower Housing |
| 10 | 30-346 | 17211-ZE1-000 | Air Filter |
| 11 | 31-026 | 28451-ZH8-003 | Starter Cup |
| 12 | 07-393 | 16955-ZE1-000 | Fuel Tank Joint |
| 13 | 55-126 | 17620-ZE2-W00 | Fuel Cap, Plastic |
| 14 | 07-118 | 17672-ZE2-W01 | Fuel Strainer |
| 15 | 07-600 | 17510-ZE1-020ZA | Fuel Tank |
| 16 | 07-060 | 95001-45200-40S | Fuel Line |
| 17 | 33-542 | 34150-ZH7-003 | Diode Assembly |
| 18 | | 96100-62050-00 | Ball Bearing, Crankshaft |
| | | 91001-ZF1-003 | Ball Bearing, Crankshaft |
| 19 | 33-541 | 15510-ZE1-033 | Oil Level Switch |
| 20 | 50-450 | 11381-ZH8-801 | Gasket, Sump Cover |
| 21 | 49-196 | 15600-ZE1-003 | Oil Cap & Indicator |
| 22 | 49-208 | 91202-883-005 | Oil Seal PTO |
| 23 | 50-454 | 15600-ZG4-003 | Oil Cap |
| 24 | 36-141 | 13200-ZE1-010 | Connecting Rod (Standard) |
| 25 | 36-243 | 13101-ZF7-010 | Piston (Standard) |
| 26 | 36-043 | 13010-ZF1-023 | Ring Set (Standard) |
| 27 | | 19630-ZH8-000 | Shield, Lower Cylinder |
| 28 | 50-425 | 18381-ZH6-800 | Gasket, Muffler |
| 29 | 35-041 | 18320-ZF1-H01 | Muffler Shield |
| 30 | 35-038 | 18310-ZF1-000 | Muffler Assembly |
| 31 | | 12310-ZE1-020 | Rocker Cover |
| 32 | 50-432 | 12391-ZE1-000 | Gasket, Rocker Cover |
| 33 | 49-183 | 16212-ZH8-800 | Gasket, Carburetor Insulator |
| 34 | 49-190 | 16221-ZH8-801 | Gasket, Carburetor |
| 35 | 49-914 | 16610-ZE1-000 | Lever, Choke |
| 36 | 49-185 | 16220-ZE1-020 | Gasket, Air Cleaner |
| 37 | 33-348 | 30500-ZE1-033 | Ignition Coil |
| 38 | 36-521 | 14711-ZF1-000 | Valve, Intake |
| 39 | 36-522 | 14721-ZF1-000 | Valve, Exhaust |
| 40 | 50-556 | 12251-ZF1-000 | Gasket, Cylinder Head |
| 41 | 36-530 | | Long Head Assembly |
| 42 | 50-638 | 16100-ZH8-W50 | Carburetor Assembly |
| 43 | 49-208 | 91202-883-005 | Oil Seal MAG |

## Honda GX240

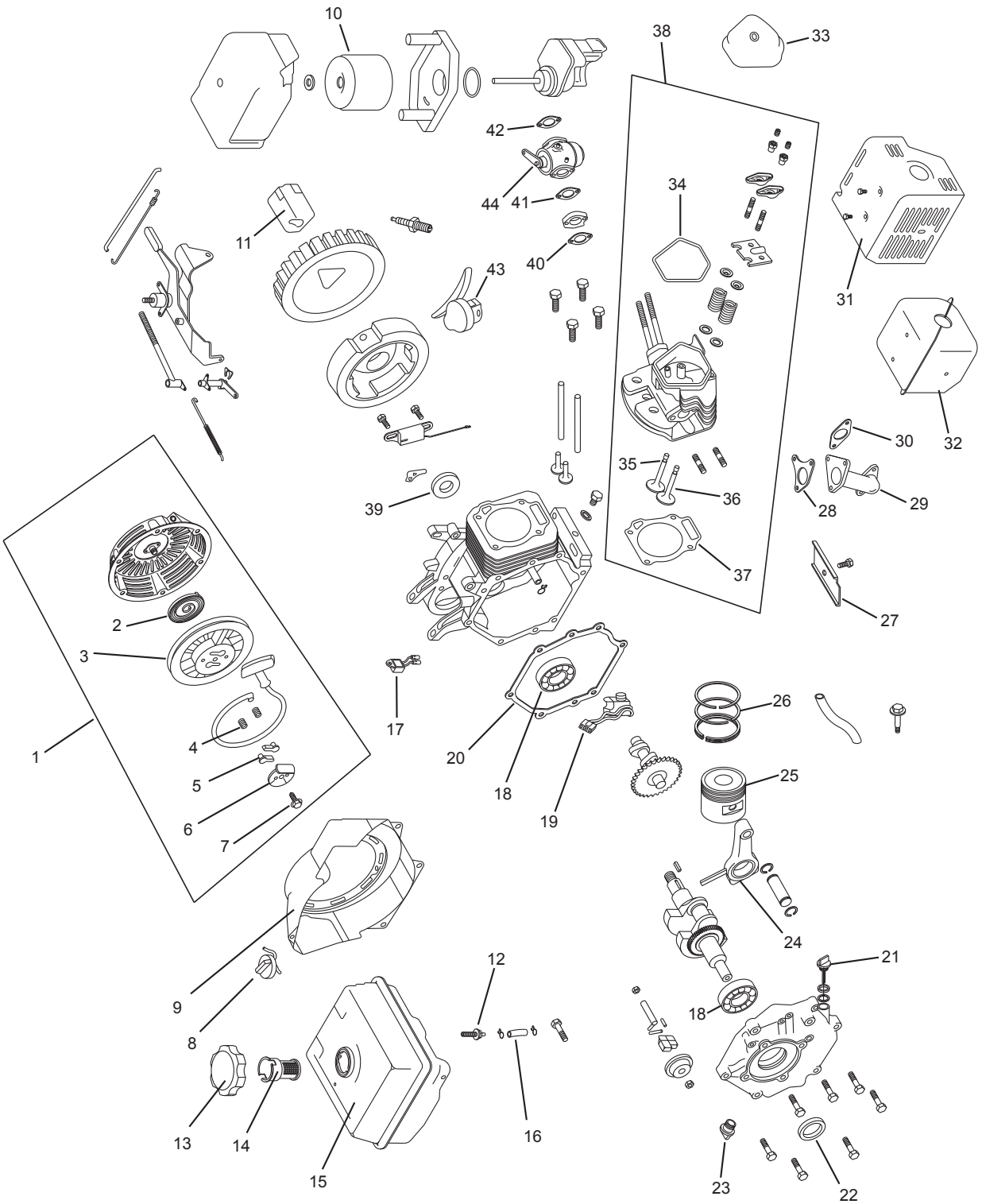
10
38
33
42
44
41
34
11
40
43
31
39
35
36
30
32
28
29
37
27
2
3
17
20
18
19
26
25
1
4
5
6
7
24
21
9
8
12
18
13
14
16
15
23
22

## Honda GX240

| № | Part No. | OEM No. | Description |
|---|---|---|---|
| 1 | 31-049 | 28400-ZE2-W01ZA | Starter Assembly |
| 2 | 43-426 | 28442-ZE2-W01 | Starter Spring |
| 3 | | 28421-ZE2-W01 | Starter Pulley |
| 4 | 31-087 | 28443-ZE2-W01 | Starter Pawl Spring |
| 5 | 31-083 | 28422-ZE2-W01 | Starter Pawl |
| 6 | | 28444-ZE2-W01 | Starter Pawl Retainer |
| 7 | 31-032 | 90004-ZE2-W01 | Starter Center Screw |
| 8 | 33-013 | 36100-ZE1-015 | Switch, On/Off |
| 9 | | 19610-ZE2-010ZA | Blower Housing |
| 10 | 30-406 | 17210-ZE2-505 | Air Filter |
| 11 | | 28450-ZE2-W11 | Starter Cup with Screen |
| 12 | 07-393 | 16955-ZE1-000 | Fuel Tank Joint |
| 13 | 07-319 | 17620-ZH7-023 | Fuel Cap |
| 14 | 07-118 | 17672-ZE2-W01 | Fuel Strainer |
| 15 | 07-601 | 17510-ZE2-010ZA | Fuel Tank |
| 16 | 07-061 | 95001-45300-40S | Fuel Line |
| 17 | 33-542 | 34150-ZH7-003 | Diode Assembly Oil Alert |
| 18 | | 96100-62060-00 | Ball Bearing, Crankshaft |
| 19 | 33-540 | 15510-ZE2-033 | Oil Level Switch |
| 20 | 50-452 | 11381-ZE2-800 | Gasket, Sump Cover |
| 21 | 50-453 | 15600-735-003 | Oil Cap & Indicator |
| 22 | 49-193 | 91201-890-003 | Oil Seal PTO 30X46X8 |
| 23 | 50-454 | 15600-ZG4-003 | Oil Cap |
| 24 | 36-142 | 13200-ZE2-000 | Connecting Rod (Standard) |
| 25 | 36-244 | 13101-ZE2-W00 | Piston (Standard) |
| 26 | 36-044 | 13010-ZE2-013 | Ring Set (Standard) |
| 27 | | 19631-ZE2-D00 | Shield, Cylinder |
| 28 | 50-423 | 18381-ZE2-W10 | Gasket, Muffler |
| 29 | 35-045 | 18330-ZH9-N00 | Muffler Pipe |
| 30 | 50-426 | 18333-ZE3-800 | Gasket, Muffler Pipe |
| 31 | 35-043 | 18320-ZE2-W61 | Muffler Shield |
| 32 | 35-034 | 18310-ZE2-W61 | Muffler Assembly |
| 33 | | 12310-ZE2-020 | Rocker Cover |
| 34 | 50-431 | 12391-ZE2-020 | Gasket, Rocker Cover |
| 35 | 36-523 | 14711-ZE2-000 | Valve, Intake |
| 36 | 36-524 | 14721-ZE2-000 | Valve, Exhaust |
| 37 | 50-553 | 12251-ZE2-800 | Gasket, Cylinder Head |
| 38 | 36-535 | | Long Head Assembly |
| 39 | 49-193 | 91201-890-003 | Oil Seal MAG 30X46X8 |
| 40 | 49-191 | 16223-ZA0-800 | Gasket, Carburetor Insulator |
| 41 | 49-187 | 16221-ZA0-800 | Gasket, Carburetor |
| 42 | 49-184 | 16220-ZA0-702 | Gasket, Air Cleaner Housing |
| 43 | 33-521 | 30500-ZE2-023 | Ignition Coil |
| 44 | 50-634 | 16100-ZE2-W71 | Carburetor Assembly |
| 45 | 49-914 | 16610-ZE1-000 | Choke Lever |

# Illustrated Parts Lists

## Honda GX340

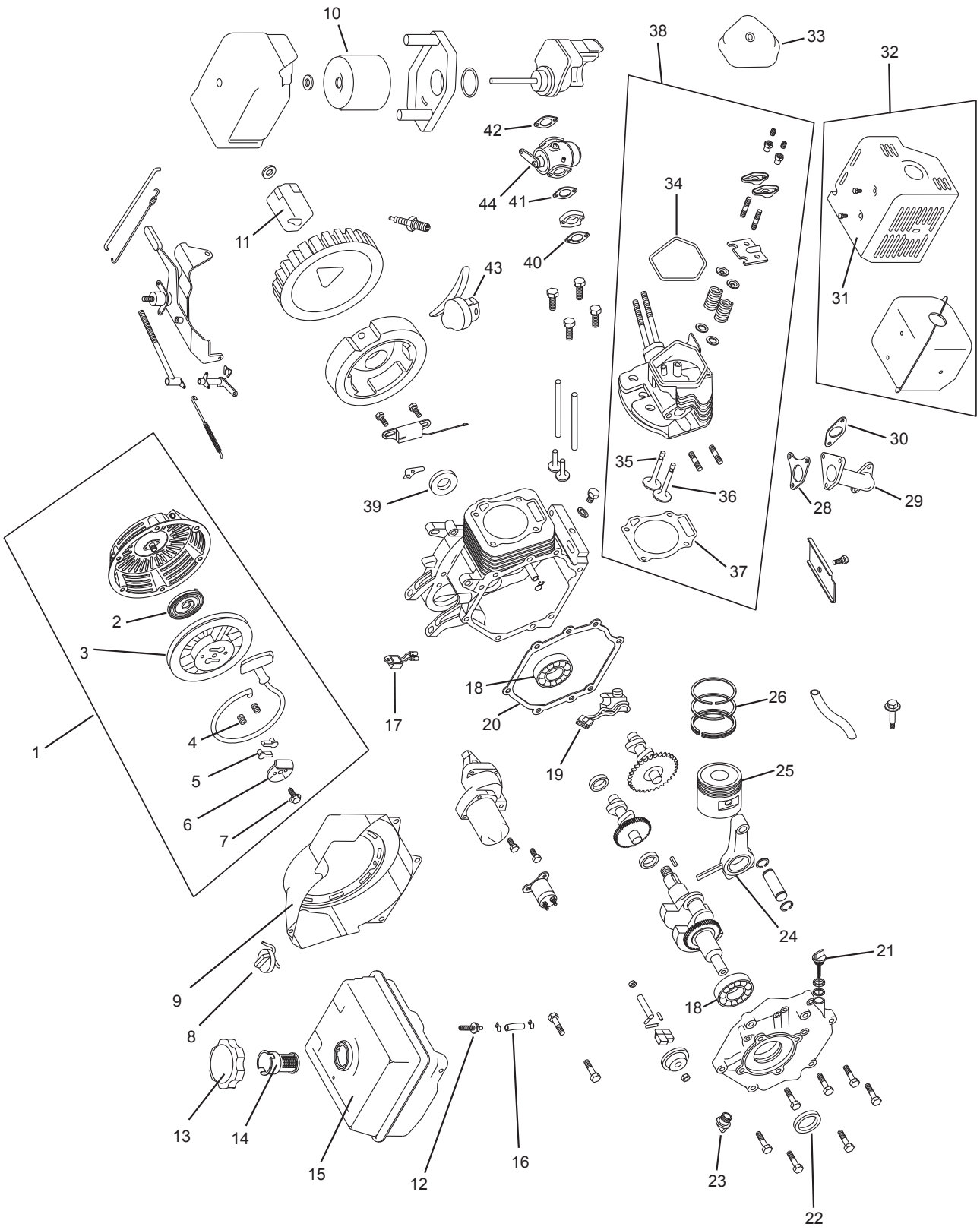

## Honda GX340

| № | Part No. | OEM No. | Description |
|---|---|---|---|
| 1 | 31-060 | 28400-ZE3-W01ZA | Starter Assembly, New Style |
| 2 | 43-426 | 28442-ZE2-W01 | Starter Spring |
| 3 | 31-034 | | Starter Pulley |
| 4 | 31-087 | 28443-ZE2-W01 | Starter Pawl Spring |
| 5 | 31-083 | 28422-ZE2-W01 | Starter Pawl |
| 6 | | 28434-ZE8-811 | Starter Pawl Retainer |
| 7 | | 90003-ZG0-003 | Starter Center Screw |
| 8 | 33-013 | 36100-ZE1-015 | Switch, On/Off |
| 9 | | 19610-ZE3-010ZA | Blower Housing |
| 10 | 30-417 | 17210-ZE3-505 | Air Filter |
| 11 | 31-037 | 28451-ZE3-A02 | Starter Cup |
| 12 | 07-393 | 16955-ZE1-000 | Fuel Tank Joint |
| 13 | 07-319 | 17620-ZH7-023 | Fuel Cap |
| 14 | 07-118 | 17672-ZE2-W01 | Fuel Strainer |
| 15 | 07-602 | 17510-ZE3-010ZA | Fuel Tank |
| 16 | | 95001-45300-40S | Fuel Line |
| 17 | 33-542 | 34150-ZH7-003 | Diode Assembly |
| 18 | | 96100-62070-000 | Ball Bearing, Crankshaft |
| 19 | 33-540 | 15510-ZE2-033 | Oil Level Switch |
| 20 | 50-455 | 11381-ZE3-801 | Gasket, Sump Cover |
| 21 | 50-453 | 1560-735-003 | Oil Cap & Indicator |
| 22 | 49-207 | 91201-ZE3-004 | Oil Seal PTO |
| 23 | 50-454 | 15600-ZG4-003 | Oil Cap |
| 24 | 36-143 | 13200-ZE3-020 | Connecting Rod (Standard) |
| 25 | 36-245 | 13101-ZE3-W00 | Piston (Standard) |
| 26 | 36-045 | 13010-ZE3-003 | Ring Set (Standard) |
| 27 | | | Shield, Cylinder |
| 28 | 50-423 | 18381-ZE2-W10 | Gasket, Muffler |
| 29 | 35-045 | 18330-ZH9-N00 | Muffler Pipe |
| 30 | 50-426 | 18333-ZE3-800 | Gasket, Muffler Pipe |
| 31 | 35-044 | 18320-ZE3-W01 | Muffler Shield |
| 32 | 35-036 | 18310-ZE2-W61 | Muffler Assembly |
| 33 | | 04108-ZE2-000 | Rocker Cover |
| 34 | 50-431 | 12391-ZE2-020 | Gasket, Rocker Cover |
| 35 | 36-325 | 14711-ZE3-000 | Valve, Intake |
| 36 | 36-326 | 14721-ZE3-000 | Valve, Exhaust |
| 37 | 50-554 | 12251-ZE3-000 | Gasket, Cylinder Head |
| 38 | 36-531 | | Long Head Assembly |
| 39 | 49-207 | 91201-ZE3-004 | Oil Seal MAG |
| 40 | 49-192 | 16223-ZE3-W00 | Gasket, Carburetor Insulator |
| 41 | 49-189 | 16221-ZF6-800 | Gasket, Carburetor |
| 42 | 49-184 | 16220-ZA0-702 | Gasket, Air Cleaner Housing |
| 43 | 33-521 | 30500-ZE2-023 | Ignition Coil |
| 44 | 49-915 | 16100-ZE3-V01 | Carburetor Assembly |
| 45 | 49-914 | 16610-ZE1-000 | Choke Lever |

# Illustrated Parts Lists

## Honda GX390

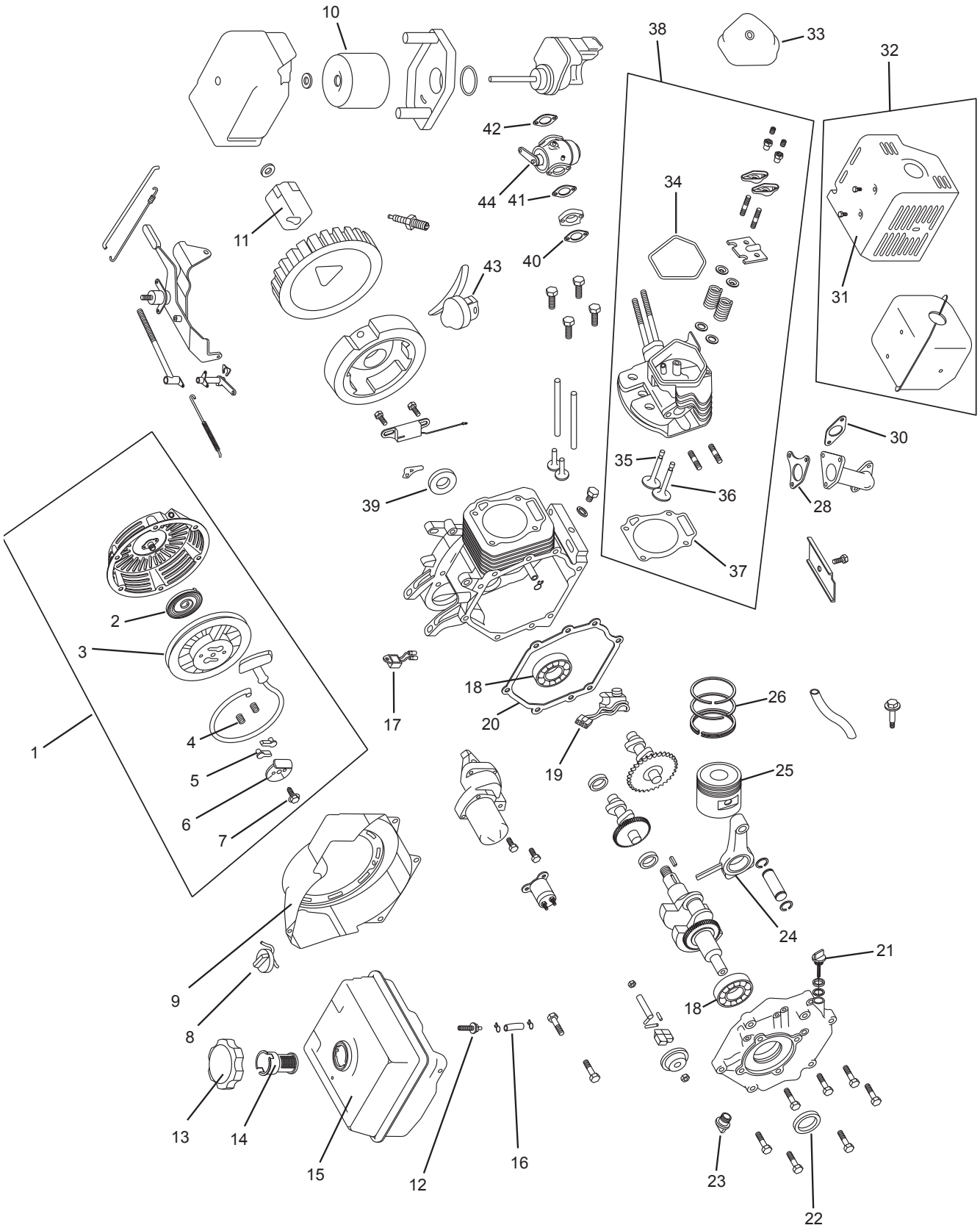

## Honda GX390

| № | Part No. | OEM No. | Description |
|---|---|---|---|
| 1 | 31-060 | 28400-ZE3-W01ZA | Starter Assembly |
| 2 | 43-426 | 28442-ZE2-W01 | Starter Spring |
| 3 | 31-034 | 28421-ZE3-W01 | Starter Pulley |
| 4 | 31-087 | 28443-ZE2-W01 | Starter Pawl Spring |
| 5 | 31-083 | 28422-ZE2-W01 | Starter Pawl |
| 6 | | 28434-ZE8-811 | Starter Pawl Retainer |
| 7 | | 90003-ZG0-003 | Starter Center Screw |
| 8 | 33-013 | 36100-ZE1-015 | Switch, On/Off |
| 9 | | 19610-ZE3-010ZA | Blower Housing |
| 10 | 30-417 | 17210-ZE3-505 | Air Filter |
| 11 | 31-037 | 28451-ZE3-A02 | Starter Cup |
| 12 | 07-393 | 16955-ZE1-000 | Fuel Tank Joint |
| 13 | 07-319 | 17620-ZH7-023 | Fuel Cap |
| 14 | 07-118 | 17672-ZE2-W01 | Fuel Strainer |
| 15 | 07-602 | 17510-ZE3-010ZA | Fuel Tank |
| 16 | 07-061 | 95001-45300-40S | Fuel Line |
| 17 | 33-542 | 34150-ZH7-003 | Diode Assembly |
| 18 | | 96100-62070-000 | Ball Bearing, Crankshaft |
| 19 | 33-540 | 15510-ZE2-033 | Oil Level Switch |
| 20 | 50-455 | 11381-ZE3-801 | Gasket, Sump Cover |
| 21 | 50-453 | 15600-735-003 | Oil Cap & Indicator |
| 22 | 49-207 | 91201-ZE3-004 | Oil Seal PTO |
| 23 | 50-454 | 15600-ZG4-003 | Oil Cap |
| 24 | 36-143 | 13200-ZE3-020 | Connecting Rod (Standard) |
| 25 | 36-246 | 13101-ZF6-W00 | Piston (Standard) |
| 26 | 36-046 | 13010-ZF6-003 | Ring Set (Standard) |
| 28 | 50-423 | 18381-ZE2-W10 | Gasket, Muffler |
| 30 | 50-426 | 18333-ZE3-800 | Gasket, Muffler Pipe |
| 31 | 35-044 | 18320-ZE3-W01 | Muffler Shield |
| 32 | 35-036 | 18310-ZE2-W61 | Muffler Assembly |
| 33 | | 04108-ZE2-000 | Rocker Cover |
| 34 | 50-431 | 12391-ZE2-020 | Gasket, Rocker Cover |
| 35 | 36-325 | 14711-ZE3-000 | Valve, Intake |
| 36 | 36-326 | 14721-ZE3-000 | Valve, Exhaust |
| 37 | 50-555 | 12251-ZF6-W00 | Gasket, Cylinder Head |
| 38 | 36-531 | | Long Head Assembly |
| 39 | 49-207 | 91201-ZE3-004 | Oil Seal MAG |
| 40 | 49-192 | 16223-ZE3-W00 | Gasket, Carburetor Insulator |
| 41 | 49-189 | 16221-ZF6-800 | Gasket, Carburetor |
| 42 | 49-184 | 16220-ZA0-702 | Gasket, Air Cleaner Housing |
| 43 | 33-521 | 30500-ZE2-023 | Ignition Coil |
| 44 | 50-637 | 16100-ZF2-V01 | Carburetor Assembly |
| 45 | 49-914 | 16610-ZE1-000 | Choke Lever |

## Honda GXV120

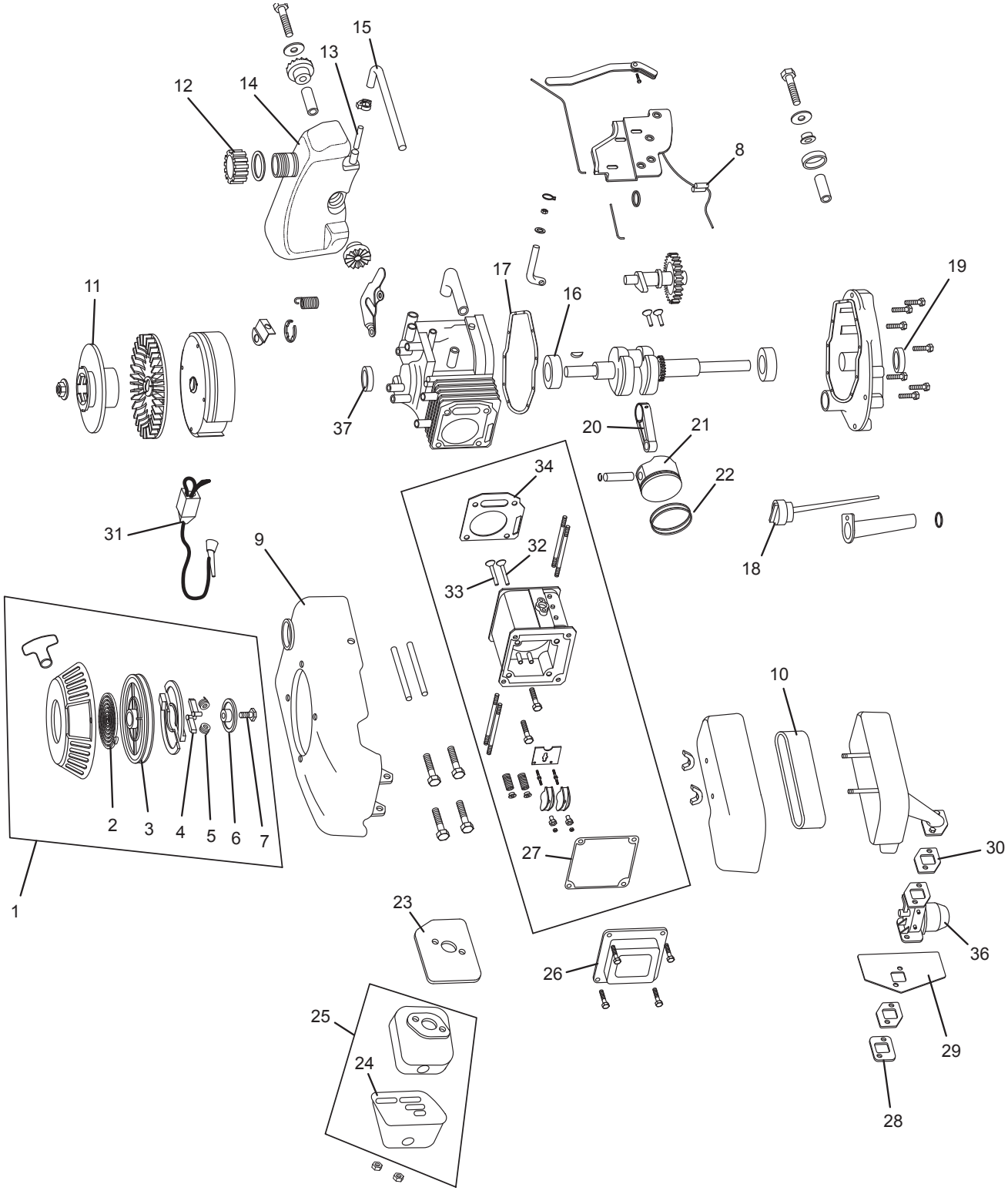

## Honda GXV120

| № | Part No. | OEM No. | Description |
|---|---|---|---|
| 1 | | 28400-ZE6-003ZA | Starter Assembly |
| 2 | | 28442-ZE6-003 | Starter Spring |
| 3 | | 28420-ZE6-003 | Starter Pulley |
| 4 | | 28443-896-000 | Starter Pawl Spring |
| 5 | | 28422-896-010 | Starter Pawl |
| 6 | | 28431-896-000 | Starter Pawl Retainer |
| 7 | | 92101-06012-0H | Starter Center Screw |
| 8 | | 36100-ZE6-651 | Switch, On/Off |
| 9 | | 19610-ZE6-020ZA | Blower Housing |
| 10 | 30-400 | 17210-ZE6-505 | Air Filter |
| 11 | | 28451-ZE6-003 | Starter Cup |
| 12 | 07-318 | 17620-ZE7-000 | Fuel Cap |
| 13 | | 16952-ZE6-000 | Fuel Strainer |
| 14 | | 17510-ZE6-000 | Fuel Tank |
| 15 | | 17612-ZE6-000 | Fuel Line |
| 16 | | 91001-878-003 | Ball Bearing, Crankshaft |
| 17 | | 11381-ZG9-J60 | Gasket, Sump Cover |
| 18 | | 15620-ZE6-810 | Oil Cap & Indicator |
| 19 | 49-194 | 9152-894-004 | Oil Seal PTO 25x38x7 |
| 20 | | 13200-ZE6-010 | Connecting Rod (Standard) |
| 21 | | 13101-ZE6-023 | Piston (Standard) |
| 22 | | 13010-ZE6-014 | Ring Set (Standard) |
| 23 | | 18381-ZE6-820 | Gasket, Muffler |
| 24 | | 18320-ZE6-020 | Muffler Shield |
| 25 | | 183A1-ZE6-003 | Muffler Assembly |
| 26 | | 12310-ZE7-000 | Rocker Cover |
| 27 | 50-433 | 12391-ZE7-M10 | Gasket, Rocker Cover |
| 28 | 49-182 | 16212-ZG9-J60 | Gasket, Carburetor Insulator |
| 29 | 49-182 | 16212-ZG9-J60 | Gasket, Carburetor |
| 30 | 49-186 | 16220-ZE6-010 | Gasket, Air Cleaner |
| 31 | 33-522 | 30500-ZG9-M02 | Ignition Coil |
| 32 | | 14711-ZE0-010 | Valve, Intake |
| 33 | | 14721-ZE6-010 | Valve, Exhaust |
| 34 | 50-428 | 12251-ZE6-000 | Gasket, Cylinder Head |
| 36 | 50-635 | 16100-ZE6-W01 | Carburetor Assembly |
| 37 | | 91202-ZE6-003 | Oil Seal MAG 22x35x6 |

## Honda GXV160

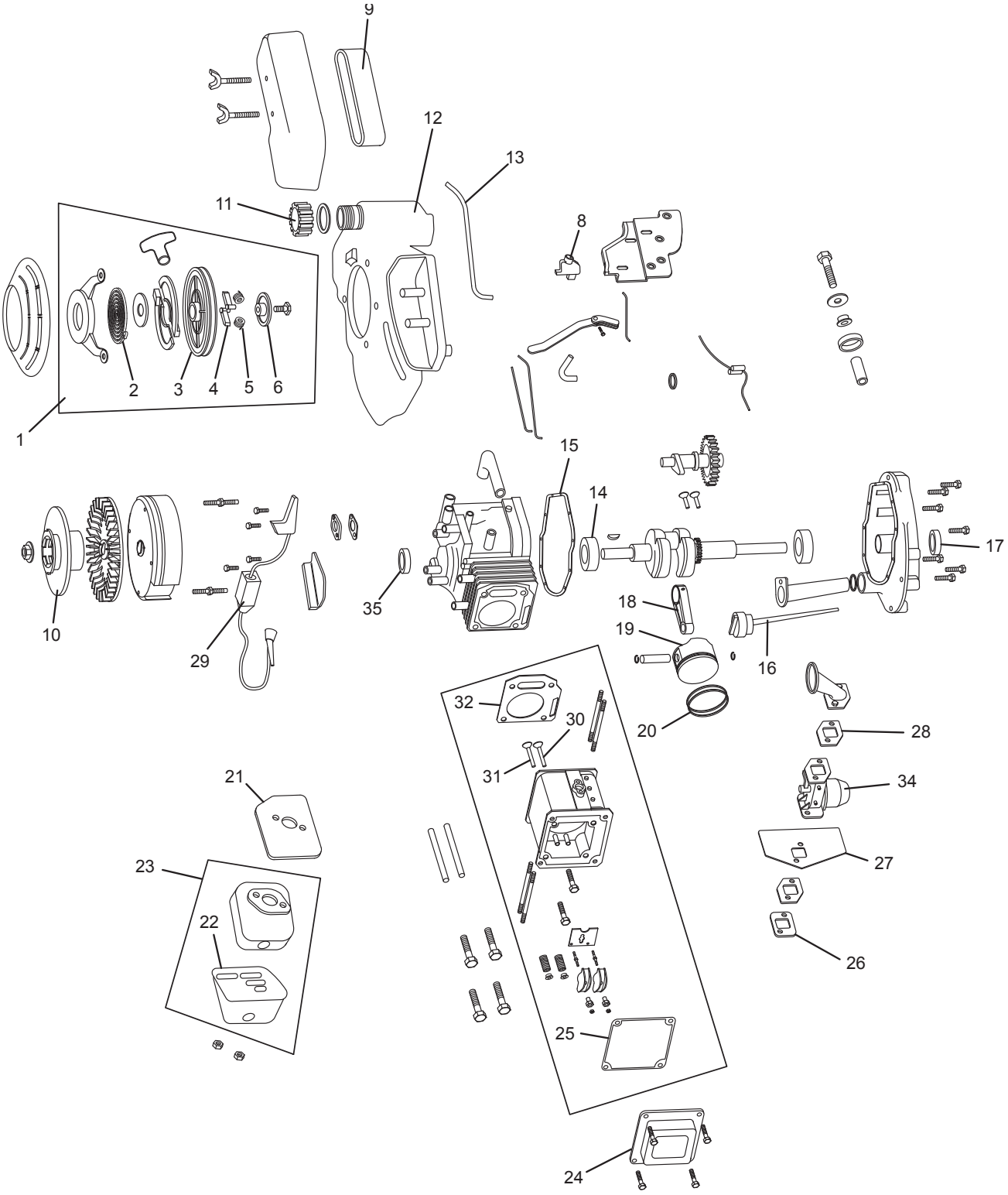

## Honda GXV160

| № | Part No. | OEM No. | Description |
|---|---|---|---|
| 1 | 31-070 | 28400-ZG9-802 | Starter Assembly |
| 2 | 31-081 | 28415-ZG9-802 | Starter Spring |
| 3 | | 28415-ZG9-802 | Starter Pulley |
| 4 | 31-090 | 28486-ZE6-T02 | Starter Pawl Spring |
| 5 | | 28485-ZE6-T02 | Starter Pawl |
| 6 | | 28444-ZG9-802 | Starter Pawl Retainer |
| 8 | 33-013 | 36100-ZE7-W01 | Switch, On/Off |
| 9 | 30-015 | 17211-ZE7-W02 | Air Filter |
| 10 | | 28451-ZE7-W00 | Starter Cup |
| 11 | 07-318 | 17620-ZE7-000 | Fuel Cap |
| 12 | | 19610-ZE7-W00ZB | Fuel Tank |
| 13 | | 17700-ZE7-W00 | Fuel Line |
| 14 | | 96100-62050-00(10) | Ball Bearing, Crankshaft |
| 15 | | 11381-ZE7-M10 | Gasket, Sump Cover |
| 16 | | 15620-ZE6-810 | Oil Cap & Indicator |
| 17 | 49-194 | 9152-894-004 | Oil Seal PTO 25x38x7 |
| 18 | | 13200-ZE7-000 | Connecting Rod (Standard) |
| 19 | | 13101-ZE7-010 | Piston (Standard) |
| 20 | 36-043 | 13010-ZF1-023 | Ring Set (Standard) |
| 21 | | 18381-ZE6-820 | Gasket, Muffler |
| 22 | | 18320-ZG9-M01 | Muffler Shield |
| 23 | | 18310-ZG9-J01 | Muffler Assembly |
| 24 | | 12311-ZG9-800 | Rocker Cover |
| 25 | 50-433 | 12391-ZE7-T00 | Gasket, Rocker Cover |
| 26 | 49-181 | 16212-ZE7-M10 | Gasket, Carburetor Insulator |
| 27 | | 16221-ZE7-M11 | Gasket, Carburetor |
| 28 | 49-186 | 16220-ZE6-010 | Gasket, Air Cleaner |
| 29 | 33-520 | 30500-ZE7-033 | Ignition Coil |
| 30 | | 14711-ZE7-000 | Valve, Intake |
| 31 | | 14721-ZE7-000 | Valve, Exhaust |
| 32 | | 12251-ZE7-000 | Gasket, Cylinder Head |
| 34 | 50-636 | 16100-ZE7-W21 | Carburetor Assembly |
| 35 | 49-194 | 9152-894-004 | Oil Seal MAG 25x38x7 |

# SECTIONS A–B


Air Filters . . . . . LG 176–222

Bearings & Bushings . . . . . LG 223–249

Belts . . . . . LG 250–339

Blade Adaptors . . . . . LG 340–343

Blades, Overview . . . . . LG 344–349

Blades by Length . . . . . LG 350–367

Blades, Universal . . . . . LG 368

Blades, Replacements . . . . . LG 369–583

Blades, Edgers . . . . . LG 584–591

# Air Filters

## Shop Packs

Oregon® premium quality air filters are more profitable than ever when you stock the "Shop Packs."

- Save 10% or more compared to packaged filters
- Buy in larger quantity and save
- 5 air filters in each Shop Pack
- Oregon packaging

## Blister Packs

Put the Oregon name and quality on display.

- Puts the filter out where the end user can see it
- Helps self sell
- Frees up counter and shelf space

| OEM Part No. | Filter | Shop Pack | Clamshell |
|---|---|---|---|
| **Briggs & Stratton** | | | |
| 398825 | 30-104 | 30-811 | |
| 491519 | 30-107 | 30-827 | |
| 494511 | 30-735 | 30-826 | |
| 691667 | 30-048 | 30-820 | |
| 693083 | 30-074 | 30-829 | |
| 697029 | 30-033 | 30-824 | |
| 698369 | 30-919 | | |
| 270579 | 30-907 | | |
| 272235 | 30-917 | | |
| 27987 | 30-906 | | |
| 393957S | 30-044 | 30-825 | |
| 394018S | 30-101 | 30-809 | |
| 397795S | 30-700 | 30-813 | |
| 491588S | 30-710 | 30-800 | 69-036 |
| 496894S | 30-049 | 30-803 | |
| 497725S | 30-029 | 30-821 | |
| 499486S | 30-032 | 30-823 | |
| **Echo** | | | |
| 130310-51830 | 30-121 | 30-831 | |
| 130310-54130 | 30-119 | 30-830 | |
| **Honda** | | | |
| 17210-ZE0-822 | 30-318 | 30-816 | |
| 17210-ZE1-821 | 30-404 | 30-802 | 69-023 |
| 17210-ZE2-822 | 30-406 | 30-805 | 69-030 |
| 17210-ZE3-010 | 30-417 | 30-806 | 69-007 |
| 17210-ZE6-003 | 30-400 | 30-808 | |
| 17211-ZE7-W03 | 30-015 | 30-843 | |
| 17211-ZE8-000 | 30-347 | 30-832 | 69-347 |
| 17211-ZG9-800 | 30-027 | | |
| 17211-ZG9-M00 | 30-709 | 30-828 | |
| **Kawasaki** | | | |
| 11013-2021 | 30-303 | 30-810 | 69-032 |
| 11013-2120 | 30-309 | 30-814 | |
| 11013-2210 | 30-311 | 30-804 | 69-031 |
| 11013-7002 | 30-322 | 30-835 | 69-322 |
| 11013-7010 | 30-054 | 30-833 | |

| OEM Part No. | Filter | Shop Pack | Clamshell |
|---|---|---|---|
| **Kohler** | | | |
| 235116 | 30-080 | 30-819 | |
| 12-083-05 | 30-085 | 30-815 | |
| 12-083-10-S1 | 30-088 | 30-834 | |
| 24-083-03 | 30-089 | 30-844 | |
| 25-083-01s | 30-055 | 30-845 | |
| 25-083-04 | 30-056 | 30-849 | |
| 25-833-01 | 30-082 | 30-847 | |
| 45-083-02 | 30-093 | 30-812 | |
| 47-083-01 | 30-098 | 30-848 | |
| 47-083-03 | 30-095 | 30-818 | 69-395 |
| **Onan** | | | |
| 140-1228 | 30-430 | 30-846 | |
| **Stihl** | | | |
| 4203-141-0300 | 30-416 | 30-837 | |
| 4223-140-1800 | 55-244 | 30-838 | |
| 4223-141-0300 | 55-249 | 30-839 | |
| **Tecumseh** | | | |
| 30727 | 30-070 | 30-822 | |
| 32972 | 30-091 | | |
| 33268 | 30-100 | 30-841 | |
| 35066 | 30-301 | 30-801 | 69-034 |
| 35403 | 30-111 | 30-842 | |
| 36046 | 30-740 | 30-807 | |
| 36356 | 30-024 | 30-850 | |
| 36745 | 30-030 | 30-840 | |
| 36905 | 30-031 | 30-817 | 69-331 |

| OREGON | Replaces | Description | Product Code |
|---|---|---|---|

## Briggs & Stratton Paper Filters

| | | | |
|---|---|---|---|
| **30-097** | 390492 | **Air Filter**<br>Fits model series 80200, 81200, 100200, 130200, 130900, 143400, 146400, 147400, 170400, 171400, & 190400<br>OD: 3-3/16", ID: 1-3/8", height: 2-13/16" | |
| **30-022** | 392286 | **Air Filter**<br>Fits model series 251400, 252400, 253400, & 255400 series<br>OD: 5", ID: 3-1/2", height: 2-11/32" | |
| **30-132** | 392308<br>392308S | **Air Filter**<br>Fits model series 60100, 61100, 80200, 80300, 80400, 81200, 81300, 81400, & 92900<br>Height: 2-3/4", diameter: 2-3/4", ID both ends: 1-3/16"<br>Use with Oregon® 30-923 foam pre-cleaner | |
| **30-106** | 393406 | **Air Filter**<br>Fits model series 170700, 190700, 191700, 192700, & 193700, & John Deere 108, R72, & S82<br>Length: 5-1/4", width: 3-1/8", height: 2-1/8" | |
| **30-105** | 393725 | **Air Filter**<br>Fits model series 220700, 251700, 252700, 253700, & 256700<br>Use on John Deere 111, 111H, & S92<br>Length: 5-3/16", width: 3", height: 2-1/2" | |
| **30-044** | 393957<br>393957S<br>390930<br>Ariens 24519 | **Air Filter**<br>Fits model series 170400, 171400, 190400, 194400, 195400, 221400, 233400, 243400, 252400, 253700, 254400, 290400, 294400, 295400, 300400, 303400, 305400, 320400, 325400, 326400, 350400, & 356400<br>OD: 4-1/4", ID: 2", height: 3-13/16"<br>Use with Oregon 30-920 foam pre-cleaner | |
| **30-825** | 4106 | **SHOP PACK** - (5) of 30-044 | |
| **30-101** | 392642<br>394018<br>394018S | **Air Filter**<br>Fits model series 401400, 402400, 421400, & 422400<br>OD: 7-1/8", ID: 5-1/2", height: 2-1/4"<br>Use with Oregon 30-929 foam pre-cleaner | |
| **30-809** | 4135 | **SHOP PACK** - (5) of 30-101 | |

A

# Air Filters

| OREGON | Replaces | Description | Product Code | |
|---|---|---|---|---|

## Briggs & Stratton Paper Filters

| | | | | |
|---|---|---|---|---|
| **30-104** | 394019<br>394019S<br>398825 | **Air Filter**<br>Fits model series 400700, 401700, 404700, 402700, 421700, 422700, 42A700, 42B700, 42D900, 42E700, 460700, & 463700<br>Length: 9-5/8", width: 4-1/4", height: 2-1/2"<br>Use with Oregon® 30-929 foam pre-cleaner | | |
| **30-811** | 4136 | **SHOP PACK** - (5) of 30-104 | | |
| **30-094** | 396424<br>396424S<br>4137 | **Air Filter**<br>Fits model series 60100, 80200, 80300, 80400, 81200, 81300, 82200, 82300, 82400, 91200, 92500, 92900, 110900, 111700, 112200, 114700, 114900, 130200, 130400, 130900, 131200, 131400, 131900, 132200, 132400, 132900, & 135200<br>OD: 2-3/4", bottom ID: 1-1/4", top ID: 1/4", height: 2-13/16"<br>Use with Oregon 30-923 foam pre-cleaner | | |
| **30-700** | 397795<br>397795S<br>John Deere PT 11025<br>John Deere PT 15853 | **Air Filter**<br>For model series 90700, 91700, 95700, 96700, 110700, 114700, & 131700<br>Length: 6-1/2", width: 4-1/2", height: 3/4", Blue Seal<br>Use with Oregon 30-038 foam pre-cleaner | | |
| **30-813** | | **SHOP PACK** - (5) of 30-700 | | |
| **30-107** | 491519<br>399806<br>399806S | **Air Filter**<br>Fits model series 253700, 256700, 280700, & 281700<br>Length: 8-5/8", width: 2.635", height: 2.7"<br>Use with Oregon 30-924 foam pre-cleaner | | |
| **30-827** | 4138 | **SHOP PACK** - (5) of 30-107 | | |
| **30-720** | 399877<br>399877S | **Air Filter**<br>Fits model series 100700<br>Length: 4-5/8", width: 4-5/8", height: 13/16"<br>Blue seal | | |
| **30-108** | 399968 | **Air Filter**<br>Fits model series 170400, 190400, 195400, & 254400<br>Mounting holes centered<br>Length: 8-3/4", width: 3", height: 2-1/2"<br>Use with Oregon 30-447 foam pre-cleaner | | |
| **30-134** | 491021 | **Air Filter**<br>Fits model series 260700 & 261700<br>Metal cap<br>Length: 6-3/4", width: 3", height: 3-1/8"<br>Use with Oregon 30-444 form pre-cleaner | | |
| **30-731** | 491384 | **Air Filter**<br>Fits model series 161400<br>Length: 7", width: 3-1/2", height: 1-1/2"<br>Use with Oregon 30-928 foam pre-cleaner | | |

A

| OREGON | Replaces | Description | Product Code |
|---|---|---|---|

## Briggs & Stratton Paper Filters

| | | | |
|---|---|---|---|
| **30-710** | 491588<br>491588S<br>399959 | **Air Filter**<br>Fits model series 80200, 82200, 83400, 86400, 90200, 91200, 92200, 93200, 94200, 92500, 11A600, 11C600,120200, 120300, 120400, 120600, 120H600, 120K00, 121000, 121100, 121200, 121300, 121400, 121700, 121800, 121A00, 121H00, 121K00, 122000, 122200, 122300, 122400, 122700, 12280, 122H00, 122K00, 122L00, 122M00, 122T00, 123700, 123800, 123H00, 123K00, 124300, 124400, 124600, 124700, 124800, 124H00, 124K00, 124L00, 124T00, 125600, 125700, 125H00, 125K00, 126300, 126400, 126700, 126800, 126K00, 126L00, 126M00, 126T00, 127300, 127400, 127600, 127700, 127800, 127H00, 128700, 128800, 128H00, 128L00, 128M00, 128T00, 129700, 129800, 129H00, 12A800, 12B600, 12B800, 12C600, 12C800, 12D600, 12E600, 12E700, 12E800, 12F600, 12F700, 12F800, 12G700, 12G800, 12H100, 12H200, 12H300, 12H700, 12H800, 12J600, 12J700, 12J800, 12J900, 12L200, 12L300, 12L800, 12L900, 12P800, 12Q500, 12Q800, 12R500, 12S100, 12S400, 12S500, 12S700, 12S800, 12T100, 12T200, 12T400, 12T700, 12T800, 12X800, 12Y800, 12Z800, 130200, 133200, 133700, 134200, 135200, 135700, 136200, 137200, 138400, 150100, 150200, 150300, 157100, 157200, 15T100, 15T200, 185400, 19L200, 19N100, 201300, 201400, 202300, 202400, 204300, 204400, 205300, 205400, 20H100, 20H200, 20L100, 20L200, 20S100, 20S200, 20T200, 210300, 210400, 212300, 212400, 213400, 216100, 216300, 217300, 21S100, 21S200, 21T100, 21T200, 250000, 25N100, 25P100, & 25T200<br>Length: 5-1/4", width: 4-1/2", height: 13/16", blue seal<br>Use with Oregon® 30-927 foam pre-cleaner (horizontal engines) & Oregon 30-961 (vertical engines) | |
| **30-800** | | **Shop Pack** - (5) of 30-710 | |
| **69-036** | | **Blister Pack** - (1) of 30-710 | |
| **30-735** | 494511<br>494511S | **Air Filter**<br>Fits model series 91400, 93400, 9k400, 115400, 134400, 135400<br>Length: 7", width: 3-1/2", height: 1-1/8"<br>Use with Oregon 30-928 foam pre-cleaner | |
| **30-826** | 4145 | **Shop Pack**- 5 of 30-735 | |
| **30-049** | 493909<br>496894<br>496894S | **Air Filter**<br>Fits model series 282700, 283700, 284700, 285700, 286700, 287700, 288700, 289700,28F700, 28M700, 28N700 28P700, 28Q700, 28R700, 28S700, 28T700, 28U700, 28V700, 28W700, 310700, 311700, 312700, & 313700<br>Length: 7-1/4", width: 2-7/8", height: 3"<br>Use with Oregon 30-925 foam pre-cleaner | |
| **30-803** | 4139 | **Shop Pack** - (5) of 30-049 | |
| **30-029** | 497725<br>497725S<br>494586 | **Air Filter**<br>Fits model series 123J00, 12U800, 12V800, & 12W800<br>Length: 4", width: 2-1/2", height: 2-1/4"<br>Use with Oregon 30-930 foam pre-cleaner | |
| **30-821** | 4197 | **Shop Pack** - (5) of 30-029 | |

A

# Air Filters

| OREGON | Replaces | Description | Product Code |
|---|---|---|---|

## Briggs & Stratton Paper Filters

| | | | |
|---|---|---|---|
| **30-032** | 499486<br>499486S<br>698754<br>695667 | **Air Filter**<br>Fits model series 40F700, 40G700, 40H700, 401500, 404500, 405500, 405700, 406500, 406700, 407500, 407600, 407700, 441500, 441600, 441700, 44550, 445600, 445700, 445800, 446700, 446800, & 446900<br>Length: 7-1/4", width: 4-5/16", height: 1-1/2"<br>Use with Oregon® 30-914 foam pre-cleaner | |
| **30-823** | | **Shop Pack** - (5) of 30-032 | |
| **30-136** | | **Air Filter**<br>Washable version of 30-032<br>Use with Oregon 30-914 foam pre-cleaner | |
| **30-028** | 496077<br>691643 | **Air Filter**<br>Fits model series 176400, 192400, 196400, 197400, 19A400, 19B400, 19E400, 19F400, 19G400, 19K400, 226400, 250400, 26400, & 257400<br>Length: 7", width: 3.5", height: 1.5"<br>Use with Oregon 30-928 foam pre-cleaner | |
| **30-048** | 493910<br>691667 | **Air Filter**<br>Fits model series 194700, 195700, 196700, 197700, 198700, 28A700, 28B700, 28D700, 257700, & 259700<br>Length: 7-1/4", width: 2-7/8", height: 2-3/8"<br>Use with Oregon 30-926 foam pre-cleaner | |
| **30-820** | | **Shop Pack** - (5) of 30-048 | |
| **30-039** | 692446<br>4224 | **Air Filter**<br>Fits 123600 & 126672 series<br>Length: 3-7/8", width: 2-1/2", height: 3"<br>Use with Oregon 30-915 foam pre-cleaner | |
| **30-087** | 692519 | **Air Filter**<br>Fits model series 356400, 358700, 380400, 380700, 381400, 381700, 385400, 385700, 385800, 386400, 386700, 540400, 541400, 542400, 543400, 543700, 61E400, 61E900, 611400, 613400, & 613700<br>OD: 7-3/4", ID: 5-9/16", height: 2-1/4"<br>Use with Oregon 30-974 foam pre-cleaner | |
| **30-135** | 695302 | **Air Filter**<br>Fits model series 20S200, 202300, 202400, 203400, 204300, 205300, 205400, 206400, 21S200, 212300, & 213400<br>Length: 4-3/4", width: 3-1/4", height: 4"<br>Use with Oregon 30-976 pre-filter | |

A

| OREGON | Replaces | Description | Product Code |
|---|---|---|---|

## Briggs & Stratton Paper Filters

| | | | |
|---|---|---|---|
| **30-033** | 690610<br>498596<br>697029<br>498569S | **Air Filter**<br>Fits model series 111600, 113400, 12H600, 12K600, 12Q500, 12R500, 12R600,12S400,12S500,12S600, 12S700, 12T100 12T400, 120200, 120300, 120410, 121000, 121200, 121300, 121400, 121600, 122000, 122300, 122600, 123300, 123400, 126300, 126400, 126600, 127300, 127400<br>Length: 3-15/16", width: 2-1/2", height: 3"<br>Use with Oregon® 30-915 foam pre-cleaner | |
| **30-824** | | **Shop Pack** - (5) of 30-033 | |
| **30-074** | 698083<br>697634<br>697014<br>795115<br>797008<br>794422 | **Air Filter**<br>Fits model series 280H00, 280J00, 281H00, 282H00, 283H00, 284H00, 285H00, 286H00, 31A500, 31A600, 31A700, 31B700, 31C700, 31D700, 31E500, 31E600, 31E700, 31F700, 31G700, 31H700, 31M900, 31N600, 31N700, 31P600, 31P700, 31P800, 31P900, & 31Q700<br>Length: 9", width: 3-1/8", height: 1-1/2"<br>Use with Oregon 30-076 foam pre-cleaner | |
| **30-829** | | **Shop Pack** - (5) of 30-074 | |
| **30-122** | 697153<br>697776 | **Air Filter**<br>Washable version of Oregon 30-074<br>Use with Oregon 30-076 foam pre-cleaner | |
| **30-073** | 698413<br>697152<br>797007<br>794421 | **Air Filter**<br>Fits model series 21A800, 21A900, 21B700, 21B800, 21B900, 210700, 212700, 212900, 214700, 215700, 215800, 215900, 216900, 217700, 217900, 218700, 218800, 219700, & 219900<br>Length: 7-1/4", width: 3-1/8", height: 1-1/2"<br>Use with Oregon 30-077 foam pre-cleaner | |
| **30-761** | 710265 | **Air Filter**<br>Fits model series 85400<br>Length: 6-1/4", width: 3-1/2", height: 7/8"<br>Blue seal | |
| **30-762** | 710266 | **Air Filter**<br>Fits model series 185400, 235400, & 254400<br>Blue seal<br>Length: 8-3/8", width: 4", height: 1-1/8"<br>Use with Oregon 30-962 pre-cleaner | |
| **30-123** | 790166 | **Air Filter**<br>Fits model series 93300, 94000, 94300, 95300, 95400, 96300, 97300, & 97400<br>Length: 2-7/8", width: 2", height: 2-1/8" | |
| **30-139** | 792101<br>John Deere MIU11286 | **Air Filter**<br>Fits model series 40G700, 401500, 405500, 406700, 407700, 445500, 441500, 441600, 441700, 445700, & 445800<br>Length: 7-1/2", width: 4-1/2", height: 2"<br>Use with Oregon 30-914 pre-cleaner | |

A

# Air Filters

| OREGON | Replaces | Description | Product Code |
|---|---|---|---|

## Briggs & Stratton Paper Filters

| | | | |
|---|---|---|---|
| **30-145** | 792105<br>4233 | **Air Filter**<br>Fits model series 40G700, 40H700, 40S800, 407700, 44H700, 44K700, 44L700, 44M700, 44N700, 44P700, 44Q700, 44S500, 44S700, 44S800, 44S900, 49M700, 49M800, 49S800, & 49T700<br>Length: 5", width: 3-1/8", height: 4-7/8"<br>Use with Oregon 30-975 pre-filter | |
| **30-161** | 792038 | **Air Filter**<br>Fits model series 90600, 100600, & 100800<br>Length: 4-3/4", width: 3", height: 2-1/4"<br>Use with Oregon 30-446 foam pre-cleaner | |
| **30-167** | 793569 | **Air Filter**<br>Fits model series 31E800, 31L700, 31M900, 31Q600, 31Q700, 31S700, 31S800, 31S900, 33M600, 33M700, 33M900, 33F700, 33R800, 33S800, 331700, 331800, 331900<br>OD: 3", ID: 1-1/2", height: 5-3/4"<br>Use with Oregon® 30-448 foam pre-cleaner | |
| **30-172** | 795066 | **Air Filter**<br>Fits model series 110P00, 111P00, 112P00, 114P00, 121Q00, 121R00, 121S00, 122Q00, 122R00, 122S00, 124Q00, 124S00, 12Q900, 12R900, 12S900, 14B900<br>Length: 5-1/2", width: 2-3/4", height: 2-1/4"<br>Use with Oregon 30-181 pre-filter | |
| **30-851** | 796031<br>591334<br>594201 | **Air Filter**<br>Fits model series 31A500, 31A600, 31A700, 31C700, 31E500, 31E600, 31E700, 31G700, 31N600, 31N700, 31P60031P700, 31Q500, 31R500, 31R600, 31R700, 31R800, 31R900, 401500, 405500, 406700, 407700, 40N700, 40N800, 40R500, 40R600, 40R700, 40R800, 445600, 44N600, 44N800, 44R500, 44R600, 44R700, & 44R800<br>OD: 3", ID: 1-1/2", height: 5" | |
| **30-852** | 796032 | **Air Filter**<br>Fits model series 21D800 & 215800<br>OD: 3", ID: 1-1/2", height: 4" | |
| **30-173** | 797033 | **Air Filter**<br>Fits model series 13H100, 13H300, 13L100, & 13L300<br>Length: 5-1/2", width: 2-3/4, height: 2-3/8" | |
| **30-186** | 797819 | **Air Filter**<br>Fits model series 10T800<br>OD: 3", ID: 1-1/2" (seal end) & 1-5/16" (top), height: 1-3/4" | |

A

| OREGON | Replaces | Description | Product Code |
|---|---|---|---|

## Briggs & Stratton Paper Filters

| | | | |
|---|---|---|---|
| **30-168** | 798452<br>593260 | **Air Filter**<br>Fits model series 93J00, 9P700, 103M00, & 104M00<br>Length: 4-3/8", width: 2-5/8", height: 1-1/4" | |
| **30-182** | 798897 | **Air Filter**<br>Fits model series 44L900, 44M900, 44P900, 44Q900, 44T600, 44T700, 44T800, 44T900, 49L900, 49M900, & 49T800<br>OD: 4", ID: 2", height: 4-3/4" | |
| **30-736** | 805113 | **Air Filter**<br>Fits model series 294400, 294700, 303400, 303700, & 350700<br>Length: 7", width: 6-1/4", height: 5/8"<br>Use with Oregon® 30-450 foam pre-cleaner | |
| **30-075** | 820263<br>4234 | **Air Filter**<br>Fits model series 356400, 358700, 385400, 385700, 386400, 386700, 433400, 473100, 474100, 58A400, 582400, & 588400<br>OD: 3-1/2", height: 7-3/8" | |
| **30-702** | 73111GS | **Air Filter**<br>Fits 6500GX generator sets<br>Length: 5-1/4", width: 4-1/2", height: 1-1/4" | |

## Briggs & Stratton Foam Filters

| | | | |
|---|---|---|---|
| **30-906** | 27987<br>27987S | **Foam Air Filter**<br>Fits model series 60000, 80000, 100200, 11200, & 130200<br>Length: 5-5/8", width: 4-1/2", height: 1-1/2"<br>Pre-oiled foam air filter | |
| **30-913** | 270067 | **Foam Air Filter**<br>Fits model series 100900<br>Length: 5-3/4", width: 3-3/4", height: 1-1/2"<br>Pre-oiled foam air filter | |
| **30-916** | 270093 | **Air Filter**<br>Fits model series 146400, 170400, 190400, 191400, 193400, 200400, 231400, 233400, 243400, & 300400<br>OD: 4-3/4", ID: 1-1/2", height: 3-1/4"<br>Pre-oiled foam air filter | |
| **30-908** | 270251 | **Foam Air Filter**<br>Fits model series 82000, 92500, & 92900 engines with a manual choke (1968 & earlier)<br>Length: 6", width: 3-5/8", height: 1-1/2"<br>Pre-oiled foam air filter | |

A

# Air Filters

| OREGON | Replaces | Description | Product Code |
|---|---|---|---|

## Briggs & Stratton Foam Filters

| | | | |
|---|---|---|---|
| **30-910** | 270447 | **Foam Air Filter**<br>Fits model series 130900<br>Length: 4-7/8", width: 4-1/4", height: 1-1/2"<br>Pre-oiled foam air filter | |
| **30-909** | 270528<br>270528S<br>4133 | **Foam Air Filter**<br>Fits model series 146700, 147700, 170700, 171700, 190700, 191700, & 193700<br>Length: 8-5/8", width: 4-3/8", height: 1-1/2"<br>Pre-oiled foam air filter | |
| **30-907** | 270579<br>270579S | **Foam Air Filter**<br>Fits model series 82500, 92500, 92900, & 93500 engines with automatic chokes (1991 & earlier)<br>Length: 5-3/8", width: 3-7/8", height: 1-1/2"<br>Pre-oiled foam air filter | |
| **30-903** | 270848 | **Foam Air Filter**<br>Fits model series 110900, 111900, 113900, & 114900<br>Length: 5-3/8", width: 4-1/8", height: 1-1/2"<br>Pre-oiled foam air filter | |
| **30-923** | 271466<br>270979 | **Foam Pre-Cleaner**<br>Use with Oregon® 30-094 & 30-132<br>Pre-oiled foam pre-cleaner | |
| **30-920** | 270782<br>271794<br>271794S<br>Ariens 24518 | **Foam Pre-Cleaner**<br>Length: 7-1/4", width: 3-3/4"<br>Use with Oregon 30-044<br>Pre-oiled foam pre-cleaner | |
| **30-447** | 271939 | **Foam Pre-Cleaner**<br>Length: 9", width: 2-5/16"<br>Use with Oregon 30-108<br>Pre-oiled foam pre-cleaner | |
| **30-924** | 271962<br>271962S<br>4110 | **Foam Pre-Cleaner**<br>Length: 7-3/4", width: 2-3/4"<br>Use with Oregon 30-107<br>Pre-oiled foam pre-cleaner | |
| **30-184** | 272218<br>493206 | **Foam Pre-Filter**<br>Length: 6-1/4", width: 2-3/4"<br>Use with Briggs & Stratton 491950<br>Pre-oiled foam pre-cleaner | 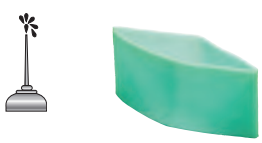 |
| **30-917** | 272235<br>272235S | **Foam Air Filter**<br>Fits model series 9B900, 9C900, 9D900, 90100, 92500, 92900, 93900, 95900, 96500, 96900, 98900, 10A900, 10B900, 10C900 10D900, 10E900, & 10F900<br>Length: 5-7/8", width: 3-3/4", height: 1-1/4"<br>Pre-oiled foam air filter | |

A

## Briggs & Stratton Foam Filters

| OREGON | Replaces | Description | Product Code |
|---|---|---|---|
| **30-925** | 272403<br>272403S | **Foam Pre-Cleaner**<br>Length: 7", width: 3"<br>Use with Oregon 30-049<br>Pre-oiled foam pre-cleaner | |
| **30-444** | 272444 | **Foam Pre-Cleaner**<br>Length: 6-5/8", width: 3"<br>Use with Oregon 30-134<br>Pre-oiled foam pre-cleaner | |
| **30-926** | 272477S<br>272477 | **Foam Pre-Cleaner**<br>Length: 7", height: 2-3/8"<br>Use with Oregon® 30-048<br>Pre-oiled foam pre-cleaner | |
| **30-929** | 271271<br>271271S<br>272490<br>272490S | **Air Filter**<br>Length: 10-3/4", width: 2-5/8"<br>Use with Oregon 30-101<br>Pre-oiled foam pre-cleaner | |
| **30-960** | 272922<br>272405 | **Air Filter**<br>Fits model series 194700, 195700, 196700, 254700, 257700, & 258700<br>Length: 7-3/4", width: 2-5/16", height: 1-5/64"<br>Pre-oiled foam air filter | |
| **30-930** | 272533<br>273185<br>273185S | **Foam Pre-Cleaner**<br>Use with Oregon 30-047 & 30-029<br>Pre-oiled foam pre-cleaner | |
| **30-915** | 273356<br>273356S | **Foam Pre-Cleaner**<br>Use with Oregon 30-033 or 30-039<br>Pre-oiled foam pre-cleaner | |
| **30-914** | 273638S<br>273638 | **Pre-Cleaner**<br>Length: 6-3/4", width: 3-3/4", height: 1/4"<br>Use with Oregon 30-032<br>Pre-oiled foam pre-cleaner | |
| **30-038** | 399039 | **Pre-Cleaner**<br>Use with Oregon 30-700<br>Length: 6", width: 4-1/16" | |
| **30-927** | 491435<br>491435S<br>271933 | **Pre-Cleaner**<br>Length: 4-7/8", width: 4-1/4", height: 5/16"<br>Use with Oregon 30-710<br>Pre-oiled foam pre-cleaner | |
| **30-961** | 493537<br>493537S | **Foam Pre-Cleaner**<br>Use with Oregon 30-710<br>Pre-oiled foam pre-cleaner | |

A

# Air Filters

| OREGON | Replaces | Description | Product Code |
|---|---|---|---|

## Briggs & Stratton Foam Filters

| | | | |
|---|---|---|---|
| **30-974** | 692520 | **Foam Pre-Cleaner**<br>Use with Oregon 30-087<br>Pre-oiled foam pre-cleaner | |
| **30-076** | 697015 | **Foam Pre-Cleaner**<br>Use with Oregon 30-074<br>Pre-oiled foam pre-cleaner | |
| **30-077** | 697292 | **Foam Pre-Cleaner**<br>Use with Oregon® 30-073<br>Pre-oiled foam pre-cleaner | |
| **30-919** | 698369 | **Air Filter**<br>Fits model series 98900, 9B900, 9C900, 9D900, 9E900, 9F900, 9G900, 9H900, 9J900, 9K900, 9L500, 9L600, 9L700, 9L900, 9M900, 9S500, 9T500, 9T600, 9T700, 10A900, 10B900, 10D900, 10E900, 10F900, 10G900, 10H900, 10J900, 10K900, 10L500, 10L600, 10L800, 10L900, 10M900, 10N900, 10S900, 10T500, 10T600, 10T700, & 10T800<br>Length: 5-1/8", width: 2-7/8", height: 1-1/4"<br>Pre-oiled foam air filter | |
| **30-962** | 710268 | **Foam Pre-Cleaner**<br>Use with Oregon 30-762<br>Pre-oiled foam pre-cleaner | |
| **30-975** | 792303 | **Foam Pre-Cleaner**<br>Use with Oregon 30-145<br>Pre-oiled foam pre-cleaner | |
| **30-446** | 793676 | **Foam Pre-Cleaner**<br>Length: 5-1/4", width: 1-5/8"<br>Use with Oregon 30-161<br>Pre-oiled foam pre-cleaner | |
| **30-448** | 793685 | **Foam Pre-Cleaner**<br>Length: 4-1/2", width: 4-7/8"<br>Use with Oregon 30-167<br>Pre-oiled foam pre-cleaner | |
| **30-449** | 794071 | **Foam Air Filter**<br>Fits model series 120T00<br>Length: 4-1/2", width: 4", height: 1-1/4"<br>Pre-oiled foam air filter | |
| **30-208** | 4216<br>5088<br>5088H<br>5088K<br>5099<br>698369<br>Craftsman SPA8S1062853001 | **Foam Air Filter** – NEW<br>Fits Briggs & Stratton 9B902, 98902, 98982, 10A902, 10B902 and 10A982<br>Length: 5-1/8", width: 2-7/8", height:1-1/4" | |

A

| OREGON | Replaces | Description | Product Code |
|---|---|---|---|

## Briggs & Stratton Foam Filters

| | | | |
|---|---|---|---|
| **30-210** | 595191 | **Foam Pre-Filter** – NEW<br>Use with Oregon 30-168 Air Filter<br>Length: 5", width: 1" | |
| **30-181** | 796254 | **Foam Pre-Filter**<br>Length: 6-1/4", width: 1-3/4"<br>Use with Briggs and Stratton 795066<br>Pre-oiled foam pre-cleaner | |
| **30-445** | 797704 | **Foam Pre-Cleaner**<br>Length: 4-1/2", width: 4"<br>Use with Briggs and Stratton 594201<br>Pre-oiled foam pre-cleaner | 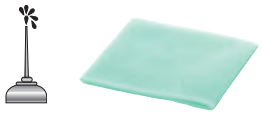 |
| **30-183** | 799579 | **Foam Air Filter**<br>Fits model series 8P500, 9P600, 9P700, & 93J00<br>Length: 4-1/4", width: 3-1/4", height: 7/8"<br>Pre-oiled foam air filter | 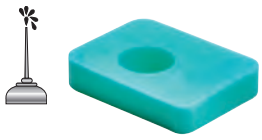 |
| **30-450** | 805267 | **Foam Pre-Cleaner**<br>Length: 6-3/4", width: 6", height: 1/4"<br>Use with Oregon 30-736<br>Pre-oiled foam pre-cleaner | 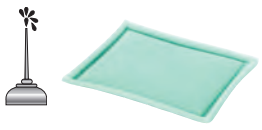 |

## Echo

| | | | |
|---|---|---|---|
| **30-618** | 130310-39730 | **Air Filter** - NEW<br>Fits Echo CS3500, CS4200, & CS420<br>Height: 2-11/50", outer diameter: 2-1/2", inner diameter: 1-3/4" | |
| **30-621** | A226-000291 | **Air Filter** - NEW<br>Echo CS350TES<br>Length: 3-3/4", width: 3" | |
| **30-625** | 130310-38331 | **Air Filter** - NEW<br>Fits Echo CS440, CS4400, CS450, CS510, CS520, & CS530<br>Height: 1-3/8", outer diameter: 2-1/2",<br>inner diameter: 1-3/4" | |
| **30-620** | P021-016371 | **Air Filter** - NEW<br>Fits Echo CS600<br>Length: 3-5/8", width: 3-1/8", height: 1" | |

A

# Air Filters

## Echo

| OREGON | Replaces | Description | Product Code |
|---|---|---|---|
| **30-619** | A226-000070 | **Air Filter** - NEW<br>Fits Echo CS6702 & CS680S<br>Height: 1-3/5", OD: 3-1/10", ID: 2-2/5" | |
| **30-624** | A226000350<br>A226000351<br>A226000470<br>A226000471<br>A226000472 | **Air Filter** - NEW<br>Fits Echo PB251, PB255, PB265, PE280, SRM266, & SRM280<br>Length: 3-1/8", width: 3-1/8", height: 3/8", inner diameter: 3/8" | |
| **30-616** | 13030508360<br>13030508361 | **Air Filter** - NEW<br>Fits Echo PB60H, PB460, PB600, PB601, PB750 &<br>PB755 series blowers; Shindaiwa EB633<br>Length: 10-3/8", width: 2-7/8", height: 1-11/32" | |
| **30-617** | A226000031<br>A226000032 | **Air Filter** - NEW<br>Fits Echo 400, 500, 600, & 700 series backpack blowers<br>Length: 4-5/32", width: 2-5/8", height: 1-3/8" | |
| **30-439-1** | A226000031 | **Air Filter**<br>Fits PB603, PB413, & PB650 blowers<br>Length: 4-3/32", width: 2-5/8", height: 1-3/8" | |
| **55-201** | 130305-08360 | **Air Filter**<br>Fits PB4600-059919 & up,<br>PB6000 Blower, PB 60-HT-Type 1E,<br>PB4600 Type-1E, & PB46HT-Type 1E<br>Length: 10-3/8", width: 2-7/8", height: 1-11/32" | |
| **30-003** | 130310-04560 | **Air Filter**<br>Fits model 2400 hedge clipper,<br>ES1100-001001 to 025416, LHB 2100,<br>PB1000, & PB1010 backpack blowers<br>Length: 2-3/4", width: 2-5/8", hole diameter: 5/16" | |
| **30-009** | 130310-51730 | **Air Filter**<br>Fits SRM2500 trimmer<br>Length: 3-1/4", width: 3-1/4", hole diameter: 5/16" |  |
| **30-121** | 130310-51830 | **Air Filter**<br>Fits SRM2400/SB, SRM2400, SRM2601,<br>SRM3110, SRM3400, SRM3800, & SRM3100/SB<br>trimmers, PB2400 & PB24LM blowers, SHC2400 &<br>HCA2400 hedge clippers, & STS2400 pole pruner<br>Also fits models PAS2400, PE2400, & PE2601<br>Length: 3-1/8", width: 3-1/8", hole diameter: 1/4" | |
| **30-831** | | **Shop Pack** - (5) of 30-121 | |

A

| OREGON | Replaces | Description | Product Code |
|---|---|---|---|

## Echo

| | | | |
|---|---|---|---|
| **30-119** | 130310-54130<br>A226000472 | **Air Filter**<br>Fits GT2000/SB, GT2400, SRM2400/SB, & SRM2110 model trimmers, PB2100 blower, ES2100, ES2000, & ES2400 vacuums, FHC1700 & 2100 hedge clippers, SHC1500, 1600, 2000, & 2400<br>Length: 2-5/8", width: 2-5/8", hole diameter: 1/4" | |
| **30-830** | | **Shop Pack** - (5) of 30-119 | |
| **30-931** | 130317-00760<br>John Deere PT8376 | **Foam Air Filter**<br>Fits Echo PB400E, John Deere 4 & 4 E, & Toro 40cc blowers<br>For backpack blowers<br>Length: 7"<br>Use with heavy-duty filter kit<br>Pre-oiled foam air filter | |
| **55-227** | 130310-03360<br>John Deere PT10281 | **Air Filter**<br>Fits PB210E<br>For John Deere blower 2E<br>Felt with rubber seal<br>Length: 4", width: 2-7/8" | |

## Exmark

| | | | |
|---|---|---|---|
| **30-655** | 127-9252<br>Toro 127-9252 | **Air Filter – NEW**<br>Toro Timecutter with 42 & 50 decks and V-Twin engines<br>Length: 6-1/8", width: 3", height: 3-3/16" | |
| **30-656** | 116-0164<br>Toro 117-0390 | **Air Filter, Hydro – NEW**<br>Fits Exmark Lazer Z S series with 48 & 60 deck, Lazer Z E series with 60 deck, Lazer Z X series with 60 & 72 deck, and Quest with 52 deck; Toro Commercial Z Master G3 74901, 74926, 74937, 74943CP, 74951, 74956CP, 74977, & 74956<br>Height: 4-1/2", outer diameter: 2-1/2" | |

## Homelite

| | | | |
|---|---|---|---|
| **55-207** | A65178<br>69681 | **Felt Air Filter**<br>Fits model EZ-Automatic & EZ<br>Length: 4", width: 2-7/8" | |
| **55-211** | 63589-A<br>587741 | **Felt Air Filter**<br>Fits SXL, XL12, XL15, XL400, & XL500, SXLAO, & XLSI.54A pump<br>Length: 4", width: 3-1/2" | 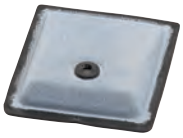 |
| **55-610** | 69141<br>D92702B<br>A24779 | **Foam Air Filter**<br>Fits Super 2, XL2, XL, CSB3012, LX30 Bandit, & UT10618A<br>Diameter: 1-7/8", thickness: 1/2"<br>Pre-oiled foam air filter | |

A

# Air Filters

| OREGON | Replaces | Description | Product Code |
|---|---|---|---|

## Homelite

| | | | |
|---|---|---|---|
| **55-611** | D98760<br>D98760B | **Foam Air Filter**<br>Fits ST145, 155, 175, 185, 285, 385, & 485 trimmers, HB100, & 180 blower<br>Length: 1-3/4", width: 1-1/2", height: 3/8"<br>Pre-oiled foam air filter | |

## Honda Paper Filters

| | | | |
|---|---|---|---|
| **30-206** | 17211-Z8B-901<br>17211-ZL8-003<br>17211-ZL8-023 | **Air Filter** – NEW<br>Fits: GC135, GCV135, GC160, GCV160, GC190, GCV160, GS190, & GSV190<br>Length: 5", width: 4-1/2", height 1" | |
| **30-613** | 17211-Z8B-901 | **Air Filter** – NEW<br>Fits: GC135, GCV135, GC160, GCV160, GC190, GCV160, GS190, & GSV190<br>Length: 5", width: 4-1/2", height: 1" | 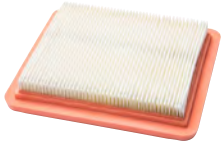 |
| **30-437** | 17010-ZJ1-000<br>Code 4956579<br>17211-ZJ1-000 | **Air Filter**<br>Fits GX610, GX620, GXV610, & GXV620<br>Old style<br>Length: 9-1/2", width: 7-1/4", height: 1-1/4" | 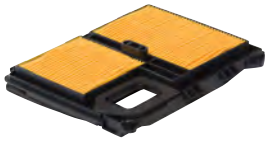 |
| **30-703** | 17210-759-013 | **Air Filter**<br>Fits GX610, GX620, GX670, & GXV670 with remote mount air cleaner assembly<br>Height: 8", OD: 3-5/8", ID: 2"<br>Base OD: 4-1/8", Seal OD: 3-1/8" | |
| **30-403** | 17210-890-505<br>Code 5311089<br>17211-890-003<br>Code 2893931<br>17211-890-013<br>Code 1021518 | **Air Filter with Foam Pre-Cleaner**<br>Fits G300, G400, 5500, & 6500 generators, & 3810 tractor<br>OD: 3-7/8" (top) & 5-3/8" (bottom), height: 2-7/8" | |
| **30-187** | 17210-Z1V-003 | **Air Filter**<br>Fits GXV140 & GXV160 engines<br>Length: 7-1/2", width: 2-1/2", height: 2" | |
| **30-404** | 17210-ZE1-822<br>Code 2893881<br>17210-ZE1-505<br>Code 5247408<br>17210-ZE1-820<br>Code 1445782<br>17210-ZE1-517 | **Air Filter with Foam Pre-Cleaner**<br>Fits GX140, GX160, & GX200<br>For 5 HP horizontal engines<br>Length: 4", width: 2-7/8", height: 2-5/8"<br>Includes Oregon® 30-506 foam pre-cleaner | |
| **30-802** | | **Shop Pack** - (5) of 30-404 | |
| **69-023** | | **Blister Pack** - (1) of 30-404 | |

A

## Honda Paper Filters

| OREGON | Replaces | Description | Product Code |
|---|---|---|---|
| **30-406** | 17210-ZE2-505<br>Code 5266721<br>17210-ZE2-515<br>17210-ZE2-821<br>Code 2893899<br>17210-ZE2-822 | **Air Filter**<br>Fits GX240, GX240K1, & GX270<br>For 8 HP horizontal engines<br>Length: 4", width: 3-9/16", height: 3-1/16"<br>Includes Oregon 30-934 foam pre-cleaner | |
| **30-805** | | **Shop Pack** - (5) of 30-406 | |
| **69-030** | | **Blister Pack** - (1) of 30-406 | |
| **30-417** | 17210-ZE3-505<br>Code 5252697<br>17210-ZE3-010<br>Code 2893907 | **Air Filter with Foam Pre-filter**<br>Fits GX240, 270, 340, & 390<br>For 8–13 HP engines<br>Length: 4-3/8", width: 3-3/4", height: 3-5/8"<br>Use with Oregon 30-454 foam pre-cleaner | |
| **30-806** | | **Shop Pack** - (5) of 30-417 | |
| **69-007** | | **Blister Pack** - (1) of 30-417 | |
| **30-400** | 17210-ZE6-505<br>Code 5185855<br>17210-ZE6-003<br>Code 1495902<br>17211-888-013<br>Code 1007483 | **Air Filter with Foam Pre-Cleaner**<br>Fits GV150, GV200, GVX120, GVX1210,<br>HR195, & HRA214, HR214, HR194,<br>HR195, & HRA214 mowers<br>For 3-1/2, 4, & 5 HP engines<br>Length: 7-9/16", width: 2-1/2", height: 2"<br>Includes Oregon 30-933 foam pre-cleaner | |
| **30-808** | | **Shop Pack** - (5) of 30-400 | |
| **30-401** | 17210-ZE7-505<br>Code 5310289<br>17210-ZE7-013<br>Code 2741627<br>17210-ZE7-003<br>Code 2289734 | **Air Filter with Foam Pre-Cleaner**<br>Fits models GVX140, 120, & 160, & commercial<br>mowers HR216 & HRA216<br>For 4 & 5 HP vertical engines<br>Length: 7-9/16", width: 2-1/2", height: 1-7/8"; metal top<br>Includes Oregon 30-933 foam pre-cleaner | |
| **30-405** | 17210-ZE8-003<br>Code 2090207<br>17210-ZE8-013<br>Code 2910727<br>17210-ZF5-505<br>Code 5248299 | **Air Filter with Foam Pre-Cleaner**<br>Fits GXV270, 340, & 390<br>For 8.5 & 11 HP OHV & 11 & 13 HP vertical engines<br>Length: 5-1/8", width: 2-5/8", height: 3-1/8"<br>Includes Oregon 30-507 foam pre-cleaner | |
| **30-318** | 17210-ZE0-505<br>Code 5273032<br>17210-ZE0-822<br>Code 2893873<br>17210-ZE8-820<br>Code 1488790 | **Air Filter with Foam Pre-Cleaner**<br>Fits GX110, GX120KI, 4 HP, & series 400 & 401K<br>Length: 4", width: 2-7/8", height: 2-1/16"<br>Use with Oregon® 30-453 foam pre-cleaner | |
| **30-816** | | **Shop Pack** - (5) of 30-318 | |

# Air Filters

| OREGON | Replaces | Description | Product Code | |
|---|---|---|---|---|

## Honda Paper Filters

| | | | |
|---|---|---|---|
| **30-436** | 17210-ZJ1-842<br>Code 7120397<br>17210-ZJ1-841 | **Air Filter**<br>Fits new style GX610KS, GX620K1, & GX670 models<br>For 20 HP engines<br>Length: 6-3/4", width: 8-3/4", height: 1-1/4"<br>Use with Oregon 30-455 foam pre-cleaner | 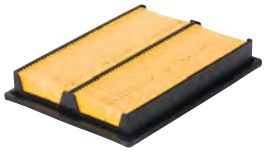 |
| **30-704** | 17211-ZOA-013<br>17211-ZE1-003 | **Air Filter**<br>Fits GCV530 & GXV530<br>Length: 8-5/8", width: 4-5/8", height: 1"<br>Use with Oregon 30-451 foam pre-cleaner | 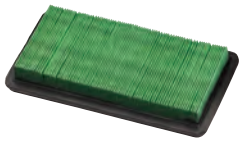 |
| **30-317** | 17210-ZA0-506<br>Code 5168273<br>17211-ZA0-702<br>Code 2893923 | **Air Filter with Foam Pre-Cleaner**<br>Fits HT3813 & 4213 tractors, GX360K1 series engines<br>Length: 6-1/2", width: 4-1/8", height: 1-7/8" | |
| **30-015** | 17211-ZE7-W03<br>17211-ZE7-W02<br>17211-ZE7-W01<br>Code 5357399 | **Air Filter - Metal Top**<br>Fits GXV160, HPC216K1HA, & HRC216K<br>For 5.5 HP vertical shaft engines<br>Length: 6-3/4", width: 2-1/4", height: 2"<br>Includes foam pre-cleaner | |
| **30-843** | | **Shop Pack**- 5 of 30-015 | |
| **30-064** | 17211-ZF5-V01<br>Code 5753595 | **Air Filter with Foam Pre-filter**<br>Fits GXV340K2 & GXV390K1<br>For 11 & 13 HP<br>Length: 4-7/8", width: 2-3/8", height: 3-1/2" | |
| **30-027** | 17211-ZG9-800<br>Code 4327383 | **Air Filter**<br>For Harmony walk-behind mowers<br>Length: 5-1/16", width: 2-5/16", height: 7/8"<br>Use with Oregon 30-452 foam pre-cleaner | 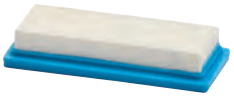 |
| **30-709** | 17211-ZG9-M00<br>Code 4010062 | **Air Filter**<br>For SX series, Harmony 215, & Model HRM215<br>Length: 5-3/4", width: 3-1/2", height: 7/8"<br>Use with Oregon 30-932 foam pre-cleaner | |
| **30-828** | | **Shop Pack** - (5) of 30-709 | |
| **30-347** | 17211-ZE8-000<br>17211-ZL8-003<br>17211-ZL8-003<br>17211-ZL8-023 | **Air Filter**<br>Fits models GC135, GCV135, GC160,<br>HRR216, HRT216, & GXV57<br>For walk-behind mowers<br>Green paper with black urethane seal<br>Length: 5-1/4", width: 4-1/2", height: 3/4" | |
| **30-832** | | **Shop Pack** - (5) of 30-347 | |
| **69-347** | | **Blister Pack** - (1) of 30-347 | |

A

| OREGON | Replaces | Description | Product Code |
|---|---|---|---|

## Honda Foam Filters

| | | | |
|---|---|---|---|
| **30-612** | 17211-Z0H-000 | **Foam Air Filter** – NEW<br>Fits HHT25, GX25, & WX10K1 Engines<br>Length: 3", width: 2-1/2", height: 1-3/8" | |
| **30-963** | 17211-899-000 | **Foam Air Filter**<br>Fits many generators & some GX240, GX270, GX340, & GX390 engines<br>Length: 6-1/2", width: 4-1/2", height: 1-3/16"<br>Pre-oiled foam air filter | |
| **30-345** | 17211-ZB2-000 | **Foam Air Filter**<br>Fits GX160 & GX200<br>Length: 5-3/8", width: 3-1/8", height: 1-1/4"<br>Pre-oiled air filter | |
| **30-346** | 17211-ZE1-000 | **Foam Air Filter**<br>Fits GX120, GX160, & GX200<br>Length: 5", width: 4", height: 1-3/16"<br>Pre-oiled air filter | |
| **30-453** | 17218-ZE0-505<br>17218-ZE0-821 | **Foam Pre-Cleaner**<br>Length: 4-1/2", width: 1-1/8"<br>Use with Oregon 30-318<br>Pre-oiled foam pre-cleaner | |
| **30-506** | 17218-ZE1-821<br>Code 2535029<br>17218-ZE1-505<br>Code 5272802<br>17218-ZE1-507 | **Foam Pre-Cleaner**<br>Length: 5", width: 2-3/8"<br>Use with Oregon 30-404<br>Pre-oiled foam pre-cleaner | 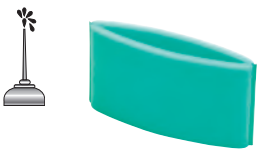 |
| **30-934** | 17218-ZE2-505<br>Code 5196308<br>17218-ZE2-821<br>Code 2538429 | **Foam Pre-Cleaner**<br>Length: 5-1/2", width: 2-7/8"<br>Use with Oregon 30-406<br>Pre-oiled foam pre-cleaner | |
| **30-454** | 17218-ZE3-505<br>17218-ZE3-000 | **Foam Pre-Cleaner**<br>Length: 5-1/2", width: 3-5/8"<br>Use with Oregon 30-417<br>Pre-oiled foam pre-cleaner | |
| **30-933** | 17218-ZE6-505<br>Code 5213293<br>17218-888-003<br>Code 1067149 | **Foam Pre-Cleaner**<br>Length: 8-1/4", width: 2-3/4"<br>Use with Oregon® 30-400 & 30-401<br>Pre-oiled foam pre-cleaner | |
| **30-452** | 17218-ZG9-800 | **Foam Pre-Cleaner**<br>Length: 5-1/4", width: 2-1/8", height: 1/4"<br>Use with Oregon 30-027<br>Pre-oiled foam pre-cleaner | 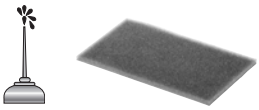 |

A

# Air Filters

| OREGON | Replaces | Description | Product Code |
|---|---|---|---|

## Honda Foam Filters

| | | | |
|---|---|---|---|
| **30-932** | 17218-ZG9-M00<br>Code 4010070 | **Foam Pre-Cleaner**<br>Length: 5-1/2", width: 3-1/4", thickness: 1/4"<br>Use with Oregon 30-709<br>Pre-oiled foam pre-cleaner<br>(Previously Oregon 30-520) | |
| **30-455** | 17218-ZJ1-840 | **Foam Pre-Cleaner**<br>Length: 8-5/8", width: 6-1/4", height: 1/4"<br>Use with Oregon 30-436<br>Pre-oiled foam pre-cleaner | 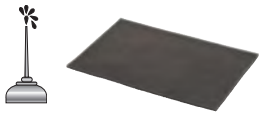 |
| **30-451** | 17218-Z0A-810 | **Foam Pre-Cleaner**<br>Length: 8-5/16", width: 4-7/16"<br>Pre-oiled foam pre-cleaner<br>Use with Oregon 30-704 | |
| **30-438** | 17231-ZM0-000<br>Code 5580444 | **Air Filter Cover & Base Assembly**<br>Fits GCV135/160 | |
| **30-332** | Honda 17230-ZE1-820 | **Air Cleaner Cover Assy**<br>Fits GX110, GX120, GX140, GX160, & GX200 | |
| **30-334** | Honda 17231-ZE3-W01 | **Air Cleaner Cover Assy**<br>Fits GX340 & GX390 | |



Can't find what you're looking for?
Try us online to search the latest products available.

OregonProducts.com

| OREGON | Replaces | Description | Product Code | |
|---|---|---|---|---|
| **Husqvarna** | | | | |
| **30-622** | 505126303<br>505126306 | **Air Filter** – NEW<br>Fits Husqvarna 555, 560XP, CS2258, & CS2260<br>Length: 3", width: 2-1/2", height: 1-3/8" | | |
| **30-634** | 544 08 08-02 | **Air Filter** – NEW<br>Fits Husqvarna 445 445E 450, & 450E chainsaws | | |
| **30-631** | 544 18 16-02<br>506 36 72-03 | **Air Filter** – NEW<br>Fits Husqvarna K750<br>Length: 5", width: 4-1/2", height: 1-3/8" | | 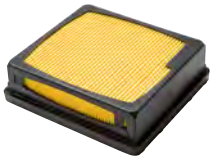 |
| **30-627** | 525 47 06-01<br>525470602 | **Air Filter** – NEW<br>Fits Husqvarna K750<br>Length: 4-7/8", width: 4-1/2", height: 2-1/2" | | |
| **30-645** | 503 81 45-01<br>503 81 45-02<br>503 72 52-01 | **Air Filter** – NEW<br>Fits Husqvarna 362, 362EPA, 362 Special, 362XP, 365, 365EPA, 365 Special, 365 Special EPA, 371, 371EPA, 372, 372EPA, & 372XPW chainsaws<br>Length: 3-3/5", width: 2-4/5", height: 1-3/5" | | |
| **30-630** | 503 81 45-03 | **Air Filter** – NEW<br>Fits Husqvarna 362, 365, 371, & 372<br>Length: 3-1/2", width: 2-7/8" | | |
| **30-637** | 501 80 71-05<br>501 80 71-01<br>501 80 71-02<br>501 80 71-06<br>501 80 71-03 | **Air Filter** – NEW<br>Fits Husqvarna 61, 181, 266, 281, & 288<br>Length: 3-1/2", width: 3-3/4", height: 1-3/8" | | |
| **30-648** | 503 89 82-01 | **Air Filter** – NEW<br>Fits Husqvarna 51 & 55<br>Length: 4", width: 3-1/2", height: 2" | | |
| **30-124** | 503 44 72-03 | **Air Filter**<br>Fits 261, 262, 268, 272, & 394 chainsaws | | |

A

# Air Filters

| OREGON | Replaces | Description | Product Code |
|---|---|---|---|

## Husqvarna

| | | | |
|---|---|---|---|
| **30-148** | 501 80 71-05 | **Air Filter**<br>Fits 61, 66, 266, 281, & 288 chainsaws | |
| **30-170** | 506-26-91-01 | **Foam Pre Cleaner**<br>Fits 371K & 375K cut-off saws<br>Laminated foam pre cleaner, 50PPI, 60PPI, & 80PPI layers, bonded together, & non-oiled<br>Length: 7-5/8", width: 4-7/8", height: 13/16" | |
| **30-623** | 522 67 50-03 | **Air Filter** – NEW<br>Fits Husqvarna 562XP<br>Length: 3-1/8", width: 2-9/16", height: 2-1/2" | |
| **30-641** | 530 02 98-11 | **Air Filter** – NEW<br>Fits Husqvarna 36, 41, 136, 137, 141, & 142 chainsaws<br>Length: 3-1/8", width: 2-11/16", height: 7/8" | |
| **30-633** | 537 02 40-02 | **Air Filter** – NEW<br>Fits Husqvarna 340, 345, 346 XP, 350, 351, & 353 chainsaws<br>Length: 2-3/4", width: 2-1/2", height: 1-1/2" | |

## Kawasaki Paper Filters

| | | | |
|---|---|---|---|
| **30-303** | 11013-2021<br>John Deere AM101191 | **Air Filter**<br>Fits FB-460V<br>For 12.5 HP engines, Wheel Horse & many others<br>Length: 7", width: 2-1/4", height: 2-5/8"<br>Includes Oregon® 30-935 foam pre-cleaner | |
| **30-810** | | **Shop Pack** - (5) of 30-303 | |
| **69-032** | | **Blister Pack** - (1) of 30-303 | |
| **30-305** | 11013-2093<br>John Deere M70284 | **Air Filter**<br>Fits FC 290Y<br>For 9 HP overhead valve engines<br>Length: 4-3/4", width: 2-7/8", height: 2-7/8", ID: 3-3/8"<br>Use with Oregon 30-936 foam pre-cleaner | |
| **30-018** | 11013-2115<br>11029-2001<br>John Deere M76077<br>John Deere M76076<br>Gravely 21495800<br>Gravely 21495900<br>Gravely 21496000 | **Air Filter**<br>Fits FD590V & AS05, John Deere 240, 245, 260, 265 285, 320, 325, F710, F725, 345, 425, & 445<br>For 18 HP water-cooled engines<br>Length: 8-3/4", width: 3-5/8", height: 2-3/4"<br>Use with Oregon® 30-329 foam pre-cleaner | |

A

## Kawasaki Paper Filters

| OREGON | Replaces | Description | Product Code |
|---|---|---|---|
| **30-325** | 11013-2132 | **Air Filter**<br>Fits FE120 & FE170<br>OD: 5-15/16", ID: 5", height: 2-3/8" | |
| **30-037** | 11013-2135<br>John Deere M115978<br>John Deere M96847 | **Air Filter**<br>Fits FD440<br>Length: 7", width: 3-5/8", height: 2-1/2"<br>Use with Oregon 30-935 pre-cleaner | |
| **30-321** | 11013-2139 | **Air Filter**<br>Fits FD-620<br>For 20 HP engine<br>Length: 7-3/4", width: 4-1/2", height: 2-3/4"<br>Use with Oregon 30-329 pre-cleaner | |
| **30-311** | 11013-2110<br>11013-2141<br>John Deere M97211<br>John Deere AM104560<br>Gravely 21391300 | **Air Filter**<br>Fits FC420V<br>For 14 HP vertical engines<br>Pear shaped<br>Length: 6-1/4", width: 3", height: 3-1/8"<br>Includes Oregon 30-938 foam pre-cleaner | |
| **30-804** | | **Shop Pack** - (5) of 30-311 | |
| **69-031** | | **Blister Pack** - (1) of 30-311 | |
| **30-304** | 11013-2098<br>11013-2143<br>11013-1214<br>John Deere M70128<br>John Deere M97266 | **Air Filter**<br>Fits FC540 series<br>For 17 HP vertical overhead valve engine<br>Pear shaped<br>Length: 7-1/2", height: 3-1/8", ID: 6"<br>Use with Oregon 30-937 foam pre-cleaner | |
| **30-309** | 11013-2120<br>11013-2175<br>John Deere M79451 | **Air Filter**<br>Fits FC150V-19A00, VC150V-A500, &<br>FC150V-E thru ES05<br>For 4-1/2 & 5 HP vertical engine on walk-behind mowers<br>Length: 4", width: 2-1/2", height: 2-3/8"<br>Includes Oregon 30-939 foam pre-cleaner | |
| **30-814** | | **Shop Pack** - (5) of 30-309 | |
| **30-327** | 11013-2186<br>11013-2195 | **Air Filter**<br>Fits FD671, FD750, & FD791<br>Length: 2-7/8", OD: 7-7/8", ID: 5-7/8"<br>Use with Oregon® 30-324 pre-cleaner | |

# Air Filters

## Kawasaki Paper Filters

| OREGON | Replaces | Description | Product Code |
|---|---|---|---|
| **30-224** | 11013-0727<br>11013-7050<br>99999-0383 | **Air Filter** – NEW<br>Fits Kawasaki FR541V-FR600V<br>Length: 5-7/8", width: 2-3/4", height: 3-1/4"<br>Outer Diameter: 2" | |
| **30-322** | 11013-7002<br>John Deere 137556 | **Air Filter**<br>Fits FH-500V<br>For 17 HP engine – blue seal<br>Length: 8-1/4", width: 6-3/8", height: 1-1/4"<br>Use with Oregon 30-940 pre-cleaner | |
| **30-835** | | **Shop Pack** - (5) of 30-322 | |
| **69-322** | | **Blister Pack** - (1) of 30-322 | |
| **30-328** | 11013-7006 | **Air Filter - Black Seal**<br>Fits FH451 & FH500<br>Length: 8-1/4", width: 3-3/8", height: 1-3/8"<br><br>NOTE: For LP gas applications only | |
| **30-057** | 11013-7017 | **Air Filter**<br>Fits FH318V & FH430B<br>For V-twins 15, 18, & 21 HP<br>Length: 7-3/8", width: 4-5/16", height: 1"<br>Use with Oregon 30-921 pre-cleaner | |
| **30-054** | 11013-7010<br>11029-7002<br>11013-7024<br>11013-7005 | **Air Filter**<br>Fits FH601V, FH641V, FH661V, FH680V, & FH721V<br>Length: 7-5/32", width: 3-1/32", height: 3"<br>Use with Oregon 30-527 foam pre-cleaner<br>NOT FOR INTERNALLY VENTED CARBURETORS | |
| **30-833** | | **Shop Pack** - (5) of 30-054 | |
| **30-163** | 11013-7027 | **Air Filter**<br>Fits FH601V, FH641V, FH661V, FH680V, & FH721V<br>Length: 7-5/32", width: 3-1/32", height: 3"<br>Use with Oregon 30-527 foam pre-cleaner<br>FOR INTERNALLY VENTED CARBURETORS | |
| **30-164** | 11013-7049 | **Air Filter**<br>Fits FR651V, FR691V, FR730V, FS481V, FS541V,<br>FS600V, FS651V, FS691V, & FS730V<br>Length: 6-5/8", width: 2-3/4", height: 3" | |
| **30-705** | 11013-7031 | **Air Filter**<br>Fits FH318V, FH430V, FH451V, & FH580V<br>Length: 7-3/8", width: 3-3/8", height: 2-3/8"<br>Use with Oregon 30-966 pre-cleaner | |

A

| OREGON | Replaces | Description | Product Code |
|---|---|---|---|

## Kawasaki Paper Filters

| | | | |
|---|---|---|---|
| **30-157** | 11013-7038 | **Air Filter Outer**<br>Fits FX751V, FX801V, FX850V, FX921V, & FXT00V<br>Length: 10-3/4"<br>Seal OD: 4-1/8"<br>Seal ID: 3-1/8"<br>Closed end OD: 4"<br>Use with Oregon® 30-158 | |
| **30-158** | 11013-7039 | **Air Filter Inner**<br>Fits FX751V, FX801V, FX850V, FX921V, & FXT00V<br>Length: 10"<br>Seal OD: 3"<br>Seal ID: 2"<br>Closed end OD: 1-5/8"<br>Use with Oregon 30-157 | |
| **30-055** | 11013-7044 | **Outer Filter – Heavy-Duty Air Filter**<br>Fits FX651V, FX691V, FX730V, FX751V, FX801V, FX850V, & FX921V<br>Height: 10-3/4", OD: 4", ID: 2-1/2"<br>Use with Oregon 30-056 | |
| **30-845** | | **Shop Pack** - (5) of 30-055 | |
| **30-056** | 11013-7045 | **Inner Filter – Heavy-Duty Air Filter**<br>Fits FX651V, FX691V, FX730V, FX751V, FX801V, FX850V, & FX921V<br>Height: 10-1/4", OD: 2-1/4", ID: 1-13/16" | |
| **30-849** | | **Shop Pack** - (5) of 30-056 | |
| **30-706** | 11029-7010 | **Air Filter**<br>Fits FJ1800<br>Length: 8-5/8", width: 2-3/4", height: 1-1/8"<br>Use with Oregon 30-441 pre-cleaner | |
| **30-313** | 3144-AA-1312A<br>49064-2059<br>John Deere M71952 | **Air Filter**<br>Fits FA210<br>For 5.2 HP engines<br>Diameter: 3", height: 2-1/8"<br>Base length: 4-7/8", base width: 4-1/4" | 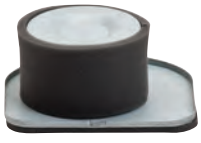 |

## Kawasaki Foam Filters

| | | | |
|---|---|---|---|
| **30-456** | 11013-2010 | **Foam Pre-Cleaner**<br>Length: 4-13/16", width: 1-7/8"<br>Use with Oregon 30-313<br>Pre-oiled foam pre-cleaner | |

A

# Air Filters

| OREGON | Replaces | Description | Product Code | |
|---|---|---|---|---|

## Kawasaki Foam Filters

| | | | | |
|---|---|---|---|---|
| **30-935** | 11013-2020<br>John Deere M88571<br>John Deere M115978<br>Gravely 042925 | **Foam Pre-Cleaner**<br>Length: 7-3/4", width: 2-1/8"<br>Use with Oregon® 30-037, 30-303, 30-314, & 30-319<br>Pre-oiled foam pre-cleaner | | |
| **30-936** | 11013-2092<br>John Deere M70283 | **Foam Pre-Cleaner**<br>Length: 5", width: 2-3/8"<br>Use with Oregon 30-305<br>Pre-oiled foam pre-cleaner | | |
| **30-937** | 11013-2097<br>John Deere M70127 | **Foam Pre-Cleaner**<br>Length: 8-1/2", width: 2-5/8"<br>Use with Oregon 30-304<br>Pre-oiled foam pre-cleaner | | |
| **30-938** | 11013-2109<br>John Deere M74285<br>Gravely 21391200 | **Foam Pre-Cleaner**<br>Length: 7-1/2", width: 2-3/8"<br>Use with Oregon 30-311<br>Pre-oiled foam pre-cleaner | | |
| **30-329** | 11013-2114 | **Foam Pre-Cleaner**<br>Use with Oregon 30-018 & 30-321<br>Pre-oiled foam pre-cleaner | | |
| **30-939** | 11013-2119<br>John Deere M77555 | **Foam Pre-Cleaner**<br>Length: 4-5/8", width: 1-7/8"<br>Use with Oregon 30-309<br>Pre-oiled foam pre-cleaner | | |
| **30-457** | 11013-2134 | **Foam Pre-Cleaner**<br>Fits FD440V/FD501V series<br>Length: 7-13/16", width: 2-1/8"<br>Pre-oiled foam pre-cleaner | | |
| **30-940** | 11013-7001<br>John Deere JD137555 | **Foam Pre-Cleaner**<br>Length: 7-3/4", width: 3-1/4"<br>Use with Oregon 30-322<br>Pre-oiled foam pre-cleaner | | |
| **30-527** | 11013-7009 | **Foam Pre-Cleaner**<br>Length: 9-3/8", width: 2-5/8"<br>Use with Oregon 30-054<br>Pre-oiled foam pre-cleaner | | |
| **30-921** | 11013-7016 | **Foam Pre-Cleaner**<br>Use with Oregon 30-057<br>Pre-oiled foam pre-cleaner | | 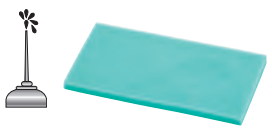 |
| **30-441** | 11013-7018 | **Foam Pre-Cleaner**<br>Fits FJ180V-AS04<br>Length: 7", width: 2-1/4", height: 3/8"<br>Use with Oregon 30-706<br>Pre-oiled foam pre-cleaner | | |

A

| OREGON | Replaces | Description | Product Code |
|---|---|---|---|

## Kawasaki Foam Filters

| | | | |
|---|---|---|---|
| **30-966** | 11013-7025 | **Foam Pre-Cleaner**<br>Length: 9, width: 2-1/2"<br>Use with Oregon® 30-705<br>Pre-oiled foam pre-cleaner | |
| **30-185** | 11013-7046<br>11013-7041 | **Foam Pre-Cleaner**<br>Length: 7-3/4", width: 2-1/2"<br>Use with Oregon 30-164<br>Pre-oiled foam pre-cleaner | |

## Enginaire

| | | | |
|---|---|---|---|
| **30-331** | | **Composite Pre-Cleaner Assembly**<br>Use with Oregon 30-065, 30-330, 30-376, 30-377, & 30-378 (Enginaire filters) | |

## Kohler Paper Filters

| | | | |
|---|---|---|---|
| **30-085** | 12-083-05<br>12 083 05<br>12 083 14-S<br>John Deere M92359<br>John Deere AM121608 | **Air Filter**<br>For 12.5 HP Command series engine<br>Triangular shape<br>Length: 4-1/2", width: 3-3/4", height: 2-3/4"<br>Use with Oregon 30-942 foam pre-cleaner | |
| **30-815** | | **Shop Pack** - (5) of 30-085 | |
| **30-088** | 12-083-10-S1<br>12 083 10-S1<br>12 083 16-S | **Air Filter**<br>Fits commercial walk-behinds after serial no. 2404900004<br>For 14 HP Command series engines<br>Length: 4-1/2", width: 3-3/4", height: 3-1/4"<br>Use with Oregon 30-943 foam pre-cleaner | |
| **30-834** | | **Shop Pack** - (5) of 30-088 | |
| **30-212** | 14 083 15-S | **Air Filter** – NEW<br>Fits Kohler XT650 & XT675<br>Length: 4-1/4", width: x 3-1/2", height: 1/2" | |
| **30-225** | 20 083 02<br>20 083 02-S<br>20 083 06<br>20 083 06-S<br>Ariens 21541600<br>Craftsman 24642<br>Cub Cadet KH-20 883 02-S1<br>Cub Cadet OCC-20 083 02<br>Husqvarna 577513401<br>Toro 98018 | **Air Filter** – NEW<br>Fits Cub Cadet LTX1040 & LTX1045; Kohler SV470S-SV620; Toro 13AX60RG744 & 13AX60RH744 lawn tractors<br>For Courage single series 15 thru 22 HP engines<br>Length: 6-3/4", width: x 5-3/8 “, height: 1-3/8" | |

A

# Air Filters

## Kohler Paper Filters

| OREGON | Replaces | Description | Product Code |
|---|---|---|---|
| **30-605** | 17 083 23-S<br>17 083 04-S<br>17 083 07-S | **Air Filter** – NEW<br>For Kohler CH270<br>Length: 2-1/2", height: 3-7/8"<br>Height: 3-7/8", ID: 1-1/4", OD: 2-1/2" | |
| **30-606** | 17 083 21-S<br>17 083 03-S<br>17 883 01-S1 | **Air Filter** – NEW<br>For Kohler CH395 & CH440<br>Length: 3", height: 4-3/8", ID: 1-5/8", OD: 3" | |
| **30-609** | 47 883 03-S1 | **Air Filter Combo, Filter with Pre-Filter** – NEW<br>For Kohler CV, CH, CV24-CV740, & CH730-CH740; 17 thru 25 HP<br>Command horizontal and vertical engines<br>Length: 7", height: 2-1/2", ID: 5-3/8", OD: 7" | 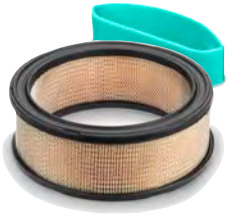 |
| **30-165** | 14 083 01-S<br>14 083 04-S | **Air Filter**<br>Fits XT149, XT173, XT-6, & XT-7<br>For Courage walk-behind mower engines<br>Length: 5-5/8", width: 3-5/8", height: 1"<br>Use with Oregon 30-190 foam pre-cleaner | 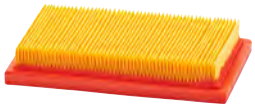 |
| **30-089** | 24-083-03-S1<br>24 083-S1 | **Air Filter**<br>Fits M25 & CH18<br>For 25 HP Command engine<br>OD: 6-7/8", ID: 5-1/2", height: 2-7/8"<br>Use with Oregon 30-945 foam pre-cleaner | |
| **30-844** | | **Shop Pack** - (5) of 30-089 | |
| **30-055** | 25-083-01S<br>25 083 01-S<br>Kubota TA040-93230 | **Heavy-Duty Air Filter**<br>Fits CH18S, CH20S, CH22S, CH25S, &<br>CH26S with heavy-duty dual element filters,<br>24-743-22S heavy-duty air filter kit, &<br>Toro Z-Master 200-Series mowers<br>For commercial mowers<br>OD: 4", ID: 2-1/2", height: 10-3/4"<br>Use with Oregon® 30-056 | |
| **30-845** | | **Shop Pack** - (5) of 30-055 | |
| **30-056** | 25-083-04<br>Kubota TA040-93220 | **Inner Filter for Heavy-Duty Air Filter**<br>Fits CH18S, CH20S, CH22S, CH25S, &<br>CH26S with heavy-duty dual element filters, &<br>24-743-22S heavy-duty air filter kit<br>For commercial mowers<br>OD: 2-1/4", ID: 1-13/16", height: 10-1/4" | |
| **30-849** | | **Shop Pack** - (5) of 30-056 | |
| **30-708** | 25-083-02S | **Air Filter Outer**<br>Fits CH25,CH26, & TH16 with canister type filter<br>OD: 3-1/2", ID: 1-7/8", height: 7-1/4"<br>Use with Oregon 30-712 inner air filter | 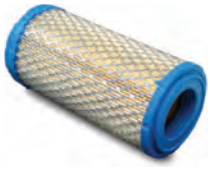 |

A

## Kohler Paper Filters

| OREGON | Replaces | Description | Product Code |
|---|---|---|---|
| **30-712** | 25-083-03S | **Air Filter Inner**<br>Fits CH25,CH26, & TH16 with canister type filter<br>OD: 1-5/8", ID: 1-3/8", height: 6-3/4"<br>Use with Oregon 30-708 outer air filter | |
| **30-082** | 25-883-01-51<br>231847<br>Cub Cadet 548436R1<br>John Deere AM30800<br>Tecumseh 31925<br>Onan 140-1188 | **Air Filter**<br>Fits K161 & K181 series<br>For 7 & 8 HP engines<br>OD: 4-3/8", ID: 3", height: 2-3/8"<br>Use with Oregon 30-125 foam pre-cleaner | |
| **30-847** | | **Shop Pack** - (5) of 30-082 | |
| **30-081** | 230840<br>Clinton 002-0233-00<br>Cub Cadet 385163R2<br>John Deere AM31034<br>Gravely 020299 | **Air Filter**<br>Fits K90, K91, K141, & K161 series<br>For 4, 6-1/4, & 7 HP engines<br>OD: 4-3/8", ID: 3", height: 1-1/2" | |
| **30-080** | 235116<br>Cub Cadet 385168R2<br>John Deere AM31400<br>Wisconsin L0194A<br>Gravely 010900<br>Tecumseh 32008 | **Air Filter**<br>Fits K241, K301, & K321 series<br>For 10, 12, & 14 HP engines<br>Use with Oregon 30-941 foam pre-cleaner<br>OD: 6-1/16", ID: 4-3/4", height: 1-7/8" | |
| **30-819** | | **Shop Pack** - (5) of 30-080 | |
| **30-023** | 28-083-03-S<br>28 083 03-S | **Air Filter Element**<br>Fits TH16: 52501 to 52532 (except 52502 52503, 52509, 52512, 52513, 52519, & 52520), TH18: 52501 to 54526 (except 52502, 52503, 52509, 52512, 52513, 52519, & 52520)<br>For TH16 & TH18 command series engines<br>Use with Oregon® 30-340 foam pre-filter<br>Length: 9-1/4", width: 6-3/4", height: 1-1/2" | |
| **30-159** | 32 083 06-S | **Air Filter**<br>Fits SV810S, SV820S, & SV830S engines<br>Length: 5-5/8", width: 4-3/8", height: 3-1/8"<br>Use with Oregon 30-460 foam pre-filter | |
| **30-130** | 32-883-03-S1<br>32 883 03-S1 | **Air Filter**<br>For twin cylinder Courage engines<br>Length: 5-5/8", width: 4-1/4", height: 1-3/4"<br>Includes foam wrap | |

A

# Air Filters

| OREGON | Replaces | Description | Product Code |
|---|---|---|---|

## Kohler Paper Filters

| | | | |
|---|---|---|---|
| **30-093** | 45-083-02<br>45 083 02<br>Cub Cadet 61606C1<br>Cub Cadet 759-3359<br>Gravely 0347661046344<br>John Deere AM37201<br>John Deere AM31034<br>Onan 140-1216 | **Air Filter**<br>Fits K341 series: MV16 to MV20, M10 to M16, KT17, KT19, K321, K482, CV20, CV18, & 22<br>For 16 HP engines<br>OD: 6", ID: 4-5/8", height: 3"<br>Use with Oregon 30-946 foam pre-cleaner | |
| **30-812** | | **Shop Pack** - (5) of 30-093 | |
| **30-098** | 47-083-01-S1<br>Cub Cadet 117210C1<br>Cub Cadet 759-3547<br>John Deere M8364 | **Air Filter**<br>Fits K181 to K241-341, CH11 to CH14, KT17, KT19, & M18<br>For 10, 12, 14, & 16 HP quiet series engines, & 17, 18, 19, & 20 HP twin cylinder engines<br>OD: 7", ID: 5-1/2", height: 1-3/4"<br>Use with Oregon 30-947 foam pre-cleaner | |
| **30-848** | | **Shop Pack** - (5) of 30-098 | |
| **30-095** | 47-083-03-S1<br>John Deere M47494<br>Woods 71803 | **Air Filter**<br>Fits K241AQS, K301AQS, K321AQS, K341AQS, CH18, CH20, CH25, CV18, CV20, & CV22 series<br>For 10, 12, 14, & 16 HP quiet series engines<br>OD: 7", ID: 5-1/2", height: 2-1/2"<br>Use with Oregon 30-944 foam pre-cleaner | |
| **30-818** | | **Shop Pack** - (5) of 30-095 | |
| **69-395** | | **Blister Pack** - (1) of 30-095 | |

## Kohler Foam Filters

| | | | |
|---|---|---|---|
| **30-125** | 234869 | **Foam Pre-Cleaner**<br>Length: 7", width: 2-3/8"<br>Use with Oregon® 30-082<br>Pre-oiled foam pre-cleaner | |
| **30-941** | 237421-S<br>John Deere M45800<br>Gravely 019332<br>Tecumseh 32906 | **Foam Pre-Cleaner**<br>Length: 9", width: 1-3/4"<br>Use with Oregon 30-080<br>Pre-oiled foam pre-cleaner | |
| **30-942** | 12-083-08-S<br>12 083 08-S<br>John Deere M92360 | **Foam Pre-Cleaner**<br>Length: 6", width: 2-3/4"<br>Use with Oregon 30-085<br>Pre-oiled foam pre-cleaner | |
| **30-943** | 12-083-12<br>After serial 2404900004<br>12 083 12 | **Foam Pre-Cleaner**<br>Length: 6-3/8", width: 3-1/4"<br>Use with Oregon 30-088<br>Pre-oiled foam pre-cleaner | |

A

## Kohler Foam Filters

| OREGON | Replaces | Description | Product Code |
|---|---|---|---|
| **30-190** | 14 083 02-S | **Foam Pre-Cleaner**<br>Fits XT149, XT173, XT675, & XT800 engines<br>Length: 5/38", width: 3-3/16", height: 3/16"<br>Use with Oregon 30-165<br>Pre-oiled foam pre-cleaner | |
| **30-189** | 17 083 12-S<br>17 083 06-S | **Foam Pre-Cleaner**<br>Fits CH260 & CH270 Engines<br>Use with Oregon 30-188<br>Pre-oiled foam pre-cleaner | |
| **30-458** | 20 083 04-S | **Foam Pre-Cleaner**<br>Fits SV470, SV530, SV540, SV541, SV590, SV591, SV600, SV601, & SV620 Engines<br>Length: 6-5/16", width: 2-5/8", height: 1-1/2"<br>Pre-oiled foam pre-cleaner | |
| **30-944** | 24-083-02<br>24 083 02 | **Foam Pre-Cleaner**<br>Length: 10-1/2", width: 2-3/8"<br>Use with Oregon 30-095<br>Pre-oiled foam pre-cleaner | |
| **30-945** | 24-083-05-S<br>24 083 05-S | **Foam Pre-Cleaner**<br>Length: 10-1/2", width: 2-3/4"<br>Use with Oregon 30-089<br>Pre-oiled foam pre-cleaner | |
| **30-459** | 32 083 05-S | **Foam Pre-Cleaner**<br>Fits SV710, SV715, SV720, SV725, SV730, SV735, & SV740 Engines<br>Length: 8-1/4", width: 1-1/2"<br>Pre-oiled foam pre-cleaner | |
| **30-460** | 32 083 08-S | **Foam Pre-Cleaner**<br>Length: 8-1/4", width: 2-13/16"<br>Use with Oregon 30-159<br>Pre-oiled foam pre-cleaner | |
| **30-946** | 45-083-01<br>45 083 01 | **Foam Pre-Cleaner**<br>Length: 8-3/4", width: 3"<br>Use with Oregon® 30-093<br>Pre-oiled foam pre-cleaner | |
| **30-947** | 52-083-01-S<br>52 083 01-S<br>John Deere M83681 | **Foam Pre-Cleaner**<br>Length: 10-1/4", width: 1-5/8"<br>Use with Oregon 30-098<br>Pre-oiled foam pre-cleaner | |
| **30-608** | 14 083 09-S | **Foam Air Filter** – NEW<br>Fits Kohler XT7, XT7.75, XT8, XT173, XT675, XT775, & XT800<br>Length: 5-3/4", width: 3-1/2", height: 7/8" | |

A

# Air Filters

| OREGON | Replaces | Description | Product Code |
|---|---|---|---|

## Kubota

| | | | |
|---|---|---|---|
| **30-019** | 15852-11082 | **Cyclonic Air Filter**<br>Fits B20, B1550, B1750, D, E, HSD, HST, G1800-S, G1900HST, G2000, G2000S, G3200, G4200H, G5200H, & G6200H<br>Top OD: 3-1/4", bottom OD: 5", height: 7" | |
| **30-316** | 12681-11220 | **Filter with Foam Pre-Cleaner**<br>For 5 HP engine on self-propelled models<br>Length: 7-7/8", width: 2-1/8", height: 2" | |
| **30-025** | 70000-11221<br>Toro 33-1300<br>John Deere M75144 | **Cylconic Air Filter**<br>Fits older John Deere AMT600<br>For B series below 20 HP<br>Height: 7-3/8", diameter: 3-1/4" | |
| **30-026** | 70000-11081<br>Toro 27-7110<br>Dixie Chopper 90122<br>Bobcat 48426<br>John Deere CH12767 | **Cylconic Air Filter**<br>For L series 20HP & above, & most Dixie Choppers<br>Height: 10-3/8", diameter: 4-1/16" | |
| **30-055** | TA040-93230<br>Kohler 25-083-01S | **Heavy-Duty Air Filter**<br>Fits CH18S, CH20S, CH22S, CH25S & CH26S with heavy-duty dual element filters, 24-743-22S (Kohler heavy-duty air filter kit), & Toro Z-Master 200-Series mowers<br>For commercial mowers<br>Height: 10-3/4", OD: 4", ID: 2-1/2"<br>Use with Oregon 30-056 | |
| **30-845** | | **Shop Pack** - (5) of 30-055 | |
| **30-056** | TA040-93220<br>Kohler 25-083-04 | **Inner Filter - Heavy-Duty Air Filter**<br>Fits CH18S, CH20S, CH22S, CH25S, & CH26S with heavy-duty dual element filters, & 24-743-22S (Kohler heavy-duty air filter kit)<br>For commercial mowers<br>Height: 10-1/4", OD: 2-1/4", ID: 1-13/16" | |
| **30-849** | | **Shop Pack** - (5) of 30-056 | |

A

| OREGON | Replaces | Description | Product Code |
|---|---|---|---|

## Lawnboy

| | | | |
|---|---|---|---|
| **30-758** | 613361 | **Air Filter**<br>For M-series engines<br>Panel filter used since 1987<br>Length: 6-5/8", width: 3-7/8", height: 7/8" | |
| **30-949** | 607580 | **Foam Air Filter**<br>For D-series engines<br>Length: 4", width: 2-1/8", height: 7/8"<br>Pre-oiled foam filter | |
| **30-950** | 609493 | **Foam Air Filter**<br>For F-series engines<br>Length: 4-1/2", width: 2-1/2", height: 1-1/4"<br>Pre-oiled foam filter | |
| **30-957** | 955574 | **Air Filter**<br>For V-series 2-cycles<br>Length: 5-11/16", width: 3-5/32"<br>Pre-oiled foam filter | |

## Maruyama

| | | | |
|---|---|---|---|
| **55-206** | 261598 | **Foam Air Filter**<br>Fits MC2300, MC2600, & MC3210 trimmers<br>Height: 1", OD: 2-3/16", ID: 1-5/16" | |

## McCulloch

| | | | |
|---|---|---|---|
| **55-212** | 69922<br>92420 | **Felt Air Filter**<br>Fits models 10-10, 700 series, & Mac 55 & 850<br>For chainsaws<br>Length: 4-3/8", width: 4-1/4" | |
| **55-214** | 95213<br>214226 | **Felt Air Filter**<br>Fits Eager Beaver models 600, 610, 650, & 800<br>For chainsaws<br>Length: 4-3/8", width: 4-1/4" | |
| **55-218** | 214224<br>61460<br>216905 | **Felt Air Filter**<br>Fits model 110, 120, & 130 Eager Beaver<br>For chainsaws<br>Diameter: 2", thickness: 7/8" | |

A

# Air Filters

| OREGON | Replaces | Description | Product Code |
|---|---|---|---|

## Mitsubishi

| | | | |
|---|---|---|---|
| **30-498** | 505 30 92-01<br>KA40046AA | **Air Filter** – NEW<br>Fits Mitsubishi TL20, TL23, TL26, TL33, TL43 TL52, & TU26<br>Length: 7-1/4", width: 4-3/16", height: 1" | |

## MTD

| | | | |
|---|---|---|---|
| **30-166** | 951-10298 | **Air Filter**<br>Fits 1P61PO, 1P65MC, 1P70CO, &<br>2P70MO walk-behind mower engines<br>Length: 5-5/8", width: 3-5/8", height: 1"<br>Includes foam pre-filter | 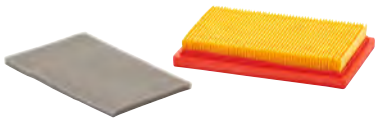 |
| **30-207** | 951-14627<br>751-14627 | **Air Filter** – NEW<br>For POWERMORE Premium OHV Engine Series 140 cc<br>Length: 6-2/3", width: 4-4/5", height: 1-1/2" | |
| **30-209** | 951-14628 | **Air Filter** – NEW<br>Fits 5T65RU, 5T65RUA, 1T65NUB, & 5T65VUA engines<br>Length: 4/5", width: 1-1/10", height: 1-1/3" | |
| **30-610** | 937-05065A<br>951-12260<br>751-12260<br>937-05065 | **Air Filter Combo, Filter with Pre-Filter** – NEW<br>Fits Huskee 13W2775S031 & 4P90JUB;<br>Yardman 13A2785S001 & 4P90JUB<br>For MTD 420cc OHV Engines<br>Length: 6", width: 3-1/4", height: 2-1/2", ID: 2" | |
| **30-611** | 753-06417 | **Foam Air Filter** – NEW<br>Fits Troy Bilt TB22EC, TB2MB, & TB32EC; Bolens BL110 &<br>BL160; Remington RM2510, RM2520, RM2560, RM2570, &<br>RM2599; Murry M2500, M2510, MS2550, & MS2560; Yard Man<br>Y25, Y2500, Y2550EC, Y2700EC, Y2900EC, Y60, YM21CS, &<br>YM71SS<br>Length: 3-1/2", width: 1" | |

## Oleo-Mac, Efco

| | | | |
|---|---|---|---|
| **30-640** | 61200025AR | **Air Filter** – NEW<br>Fits SP38, SP42, SP380, & SP440<br>Length: 4-1/10", width: 3-1/2" | |
| **30-629** | 61120018R | **Air Filter** – NEW<br>Fits Oleo Mac 746, 753, & 755 brush cutters; Efco 8460, 8530IC,<br>8535, 8535 ERGO, & 8550 BOSS brush cutters<br>Length: 3-3/5", width: 2-3/5", height: 1-1/20" | |

A

| OREGON | Replaces | Description | Product Code |
|---|---|---|---|

## Onan

| | | | |
|---|---|---|---|
| **30-082** | 140-1188<br>Tecumseh 31925 | **Air Filter**<br>Fits HH80, HH100, HH120, VH80, & VH100 series engines<br>For 8, 10, & 12 HP horizontal engines<br>OD: 4-3/8", ID: 3", height: 2-3/8" | |
| **30-093** | 140-1216<br>Cub Cadet 61606C1<br>John Deere AM37201<br>Kohler 45-083-02 | **Air Filter**<br>Fits K341 series: MV16 to MV20, M10 to M16, KT17, & KT19, & BF, BFA, BS, BGA, B43, & B48<br>For 16 HP Kohler<br>OD: 6", ID: 4-5/8", height: 3"<br>Use with Oregon® 30-126 foam pre-cleaner | |
| **30-430** | 140-1228<br>140-2522<br>140-2628<br>Grasshopper 100941<br>John Deere AM106953<br>Toro NN10774 | **Air Filter**<br>Fits NHC, T260, & P218, John Deere 318 & 420 tractors<br>OD: 8-1/4", ID: 6-3/8", height: 2-1/4"<br>Use with Oregon 30-953 pre-cleaner | |
| **30-846** | | **Shop Pack** - (5) of 30-430 | |
| **30-953** | 140-1496<br>John Deere HE140-1496 | **Foam Pre-Cleaner**<br>Fits NHC, T260, & P218<br>Use with Oregon 30-430<br>Pre-oiled foam pre-cleaner<br>(Previously Oregon 30-011) | |

## Partner

| | | | |
|---|---|---|---|
| **30-149** | 506-23-18-02 | **Air Filter**<br>Fits K950 & K1250<br>Active cut-off saws<br>Length: 6", width: 4-1/4", height: 2-5/8" | |

## Poulan

| | | | |
|---|---|---|---|
| **55-515** | 530-37793 | **Foam Air Filter**<br>Fits 1950, 2050, 2075, 210, 2150, 2175, 2250, 230, 2450, 2550, & 260 gas chainsaws<br>Pre-oiled foam filter | |
| **55-612** | 23369 | **Foam Air Filter**<br>Fits model 25<br>For chainsaws<br>Length: 3-3/8", width: 1-5/8", height: 1-1/4"<br>Pre-oiled foam filter | |
| **55-613** | 23791 | **Foam Air Filter**<br>Fits MICRO XXV, 18, 20, & 2300<br>For chainsaws<br>Length: 2-5/8", width: 1-1/2", height: 1"<br>Pre-oiled foam filter | |

A

# Air Filters

| OREGON | Replaces | Description | Product Code |
|---|---|---|---|

## Poulan

| | | | |
|---|---|---|---|
| **55-226** | 24548 | **Felt Air Filter**<br>Fits models 3400 & 3700<br>For chainsaws<br>Length: 3-7/8", width: 2-5/8", height: 1" | |
| **30-964** | 530-036575 | **Foam Air Filter**<br>For Featherlite & other gas trimmers<br>Pre-oiled foam air filter | |
| **30-965** | 530-049383 | **Foam Air Filter**<br>For BV-series gas blowers<br>Pre-oiled foam air filter | |

## Red Max

| | | | |
|---|---|---|---|
| **30-068** | T4012-82310 | **Air Filter**<br>Fits EB7000 blower | |
| **30-067** | 550-82171 | **Foam Air Filter**<br>Fits BC2300DL & BC2600DL trimmers<br>Pre-oiled foam | |
| **30-652** | 577633001<br>57763301<br>577633001 | **Foam Pre-Filter** – NEW<br>Fits Red Max BCZ230TS, BCZ2450, BCZ2460, BCZ260, BCZ2650, BCZ2660, BCZ3050, & BCZ3060<br>Length: 2-9/10", width: 3-1/4", height: 3/8" | |
| **30-955** | T4012-82320 | **Air Filter**<br>Fits EB-7000 blower<br>Pre-oiled foam | |

## Shindaiwa

| | | | |
|---|---|---|---|
| **55-231** | 20000-81740S<br>Stihl 4114-124-0800<br>Green Machine 309891<br>Robin 1082 | **Foam Air Filter**<br>Fits T20, T25, C35, & B45 trimmers<br>Diameter: 2-1/4", thickness: 5/16"<br>Pre-oiled foam filter | |
| **55-510** | 70064-82210 | **Foam Air Filter**<br>Fits T18, F18, T230, C230, LE230, & TT230XB trimmers<br>Length: 9/16", width: 3-3/8"<br>Pre-oiled foam filter | |
| **30-719** | 38010-82581 | **Air Filter**<br>Fits EC7500 & EC7600 cut-off saws<br>Includes foam pre-filter<br>7" L x 4" W x 2"H | |

A

| OREGON | Replaces | Description | Product Code | |
|---|---|---|---|---|
| **Shindaiwa** | | | | |
| **30-721** | 60023-98031 | **Air Filter**<br>Fits T230 & T231 trimmers<br>2-1/4" L x 1-7/8" W x 3/8" H | | 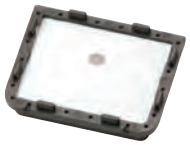 |
| **Stihl** | | | | |
| **30-220** | 1140 140 4401 | **Air Filter** – NEW<br>Fits MS 311, MS 362, & MS 391 chainsaws<br>Length: 4-3/8", width: 3-5/8", height: 1-7/8" | | |
| **30-221** | 1145 140 4400 | **Air Filter** – NEW<br>Fits MS 201 T chainsaws<br>Length: 4-7/16", width: 3", height: 3/4" | | |
| **30-223** | 4148 141 0300 | **Air Filter** – NEW<br>Fits FS 240 C, FS 240 RC, FS 260 C, FS 260 RC, FS 360 C, FS 410 C, FS 460 C, & FS 460 RC<br>Length: 5-1/4", width: 3", height: 2" | | |
| **30-853** | 0000-120-1654 | **Air Filter**<br>Fits 044, MS440, 066, MS660, 084, & 088<br>3-piece kit<br>5" L x 4-1/8" W x 1-3/4" H | | |
| **30-154** | 1110-120-1601 | **Air Filter**<br>Fits 041 | | 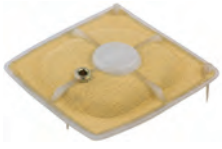 |
| **30-155** | 1120-120-1600 | **Air Filter**<br>Fits 009, 010, & 011 | | |
| **30-337** | Stihl 1121-120-1617 | **Air Filter**<br>Fits 024, 026, MS240, & MS260 | | |
| **30-156** | 1130-124-0800 | **Air Filter**<br>Fits 017, 018, MS170, & MS180 | | |
| **55-236** | 1118-120-1611 | **Air Filter**<br>Fits 028 saw<br>Length: 3-1/2", width: 2-1/4", height: 3/4" | | |

A

# Air Filters

| OREGON | Replaces | Description | Product Code | |
|---|---|---|---|---|
| **Stihl** | | | | |
| **30-642** | 1123 120 1612<br>1123 120 1613 | **Air Filter**<br>Fits Stihl MS210, MS230, MS250 | | |
| **55-079** | 4134-141-0300 | **Air Filter**<br>Fits FS200, FS300, FS350, FS400, &<br>FS450 brushcutter trimmers<br>Length: 3-1/2", width: 2-3/4", height: 1" | | 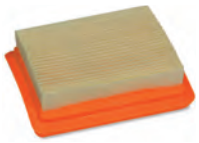 |
| **30-416** | 4203-141-0300 | **Air Filters**<br>For BR320 & BR400 backpack blowers<br>OD: 2-7/8", ID: 2", height: 1-1/2" | | |
| **30-837** | | **Shop Pack** - (5) of 30-416 | | |
| **30-137** | 4203-141-0301 | **Air Filter**<br>Fits Early versions of BR320, 340, 400, &<br>420 backpack blowers<br>Length: 5-1/8", width: 3-1/2", height: 1-1/2" | | |
| **55-247** | 4203-141-0310 | **Felt Pre-Cleaner**<br>Fits BR320 & 400 backpack blowers<br>Use with Oregon® 30-416<br>4-3/4" L x 1-1/2" H | | |
| **55-240** | 4201-141-0300 | **Air Filter**<br>Fits Quick Cut TS350, TS360, & TS510<br>For cut-off saws<br>OD: 3-7/8", ID: 2-3/8", height: 2-7/8"<br>Use with Oregon 55-242 inner filter &<br>55-241 pre-cleaner | | |
| **55-242** | 4201-140-1801 | **Inner Filter**<br>Fits Quick Cut TS350, TS360, & TS510<br>For cut-off saws<br>Use with Oregon 55-240 & 55-241 | | |
| **55-241** | 4201-141-0310 | **Felt Pre-Cleaner with Stitched Elastic**<br>Fits Quick Cut TS350, TS360, & TS510<br>For cut-off saws<br>Tight seal<br>Length: 5-1/2", width: 2-3/4"<br>Use with Oregon 55-240 & 55-242 | | |
| **55-263** | | **Air Filter Kit**<br>Fits Quick Cut models TS350, TS360, &<br>TS510 cut-off saws<br>Contains (1) each of Oregon® 55-240, 55-241, & 55-242 | | |
| **55-246** | 4221-141-0310 | **Felt Pre-Cleaner**<br>Fits TS460 cut-off saw<br>Stitched elastic for tight seal<br>Use with Oregon 55-248 air filter & 55-243 inner filter | | |

A

## Stihl

| OREGON | Replaces | Description | Product Code |
|---|---|---|---|
| **55-243** | 4221-140-1800 | **Inner Filter**<br>Fits TS460 cut-off saw,<br>OD: 2-7/8", ID: 2-11/16", height: 1-11/16"<br>Use with Oregon 55-248 & 55-246 | |
| **55-248** | 4221-140-4400 | **Air Filter, Main**<br>Fits TS460 cut off saw<br>Diameter: 4-1/2", height: 2-1/4"<br>Use with Oregon 55-243 inner filter &<br>55-246 pre-cleaner | 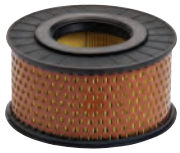 |
| **55-262** | | **Air Filter Kit**<br>Fits Quick Cut TS460 cut-off saws<br>Contains (1) each of Oregon 55-243, 55-246, & 55-248 | 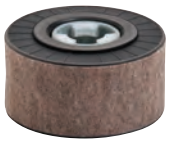 |
| **55-244** | 4223-140-1800 | **Air Filter**<br>Fits TS400 cut-off saw<br>Secondary filter, flocked screen<br>Length: 4-5/8", width: 2-3/4", height: 3/8" | |
| **30-838** | | **Shop Pack** - (5) of 55-244 | |
| **55-249** | 4223-141-0300 | **Air Filter Panel Style**<br>Fits TS400 cut-off saw (main filter)<br>Width: 5-3/8", length: 3-1/2", height: 1-15/16" | 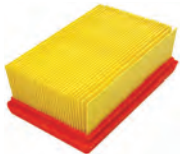 |
| **30-839** | | **Shop Pack** - (5) of 55-249 | |
| **55-245** | 4223-141-0600 | **Foam Pre-Cleaner**<br>Fits TS400 cut-off saw<br>Outer foam filter,<br>Width: 3-5/32", length: 4-7/8", height: 3/4" | |
| **30-639** | 1125-160-1612<br>1125-120-1626 | **Air Filter –** NEW<br>Fits Stihl 034, 036, MS340, & MS360<br>Length: 4-1/8", Width: 3-5/8", Height: 1-5/8" | |
| **30-644** | 4229-120-1800<br>4229 124 1500 | **Air Filter –** NEW<br>Fits Stihl BG45, BG46, BG55, BG65, BR45, SH55, & SH85<br>Length: 3", width: 2-3/8", height: 1/2" | |
| **30-643** | 4180-120-1800 | **Air Filter –** NEW<br>Fits Stihl FC100, FC110, FC90, FC95, FR130, FS90R, FS100, FS100ARX, FS110, FS130, FS310, FS87, FS90, FT100, FX130, HL100, HL90, HL95, HT100, HT101, HT130, HT131, KM100, KM110, KM130, KM90, & SP90<br>Length: 2-5/8", width: 3", height: 1/2" | |

A

# Air Filters

| OREGON | Replaces | Description | Product Code |
|---|---|---|---|

## Stihl

| | | | |
|---|---|---|---|
| **30-653** | 0000-141-0300 | **Foam Pre-Filter** – NEW<br>Fits Stihl 044, 046, 064, 066, 084, 088, MS440, MS441, MS460, MS640, MS650, MS660, MS780, & MS880<br>Length: 11-2/5" ,height: 1-2/5", OD: 3-3/4" | |
| **30-222** | 4144 124 2800 | **Foam Pre-Filter** – NEW<br>Fits: Stihl KM56, KM56R, KM56C, & KM56RC Kombi engines; FC56, FC56C, FC70, & FC70C edgers; FS40, FS40C, FS50, FS50C, FS50L, FS56, FS56C, FS56R, FS56RC, FS70, FS70C, & FS70RC trimmers; HT56 & HT56C hedge trimmers<br>Length: 3", width: 2-3/8", height: 1/4" | |
| **30-153** | | **Air Filter Kit**<br>Fits TS400 cut-off saws<br>Contains (1) each of Oregon 55-245, 55-244, & 55-249 | |
| **30-333** | Stihl 4238-140-4401 | **Air Filter Kit**<br>Fits TS410 & TS420 cut-off saws<br>Length: 5-7/8", width: 3-7/8" (5-1/2" w/loop), height: 1-1/2" | 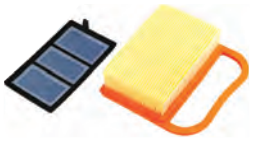 |
| **55-231** | 4114-124-0800<br>Green Machine 309891<br>Robin 1082 | **Foam Air Filter**<br>Fits Stihl old style models FS50, FS51, FS60, & FS61<br>Diameter: 2-1/4", thickness: 5/16" | |
| **30-956** | 4137-124-1500 | **Air Filter**<br>Fits FS75, FS80, FS85, HS80, HL75K, FC75, & BG75<br>Length: 2-7/16", width: 2-7/16", height: 1/4"<br>Pre-oiled foam filter | 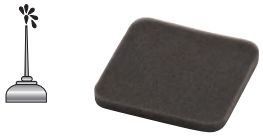 |

## Tecumseh Paper Filters

| | | | |
|---|---|---|---|
| **30-070** | 30727<br>Cub Cadet 488619R1<br>Cub Cadet TC30727<br>John Deere AM30900 | **Air Filter**<br>Fits LAV, H, HS, HH, VH, HM, V40-70, & HS30 series<br>For 3–8 HP vertical & horizontal engines<br>OD: 3-5/8", ID: 2-1/4", height: 2" | |
| **30-822** | | **Shop Pack** - (5) of 30-070 | |
| **30-081** | 30804 | **Air Filter**<br>Fits H40, H50, H60, & H70 series<br>For 4, 5, 6, & 7 HP horizontal engines<br>OD: 4-3/8", ID: 3", height: 1-1/2" | |
| **30-082** | 31925 | **Air Filter**<br>Fits HH80, HH100, HH120, VH80, & VH100 series engines<br>For 8, 10 & 12 HP horizontal engines<br>OD: 4-3/8", ID: 3", height: 2-3/8" | |

A

| OREGON | Replaces | Description | Product Code |
|---|---|---|---|

## Tecumseh Paper Filters

| | | | |
|---|---|---|---|
| **30-080** | 32008<br>Case C-2883<br>Cub Cadet 385168R2<br>Gravely 010900<br>John Deere AM31400<br>Wisconsin-Robin L0194A<br>Kohler 235W6 | **Air Filter**<br>Fits HH80, HH100, HH120, OH140, OH160, & OH180<br>For 8, 10, 12, 14, 16, & 18 HP horizontal engines<br>OD: 6-1/16", ID: 4-3/4", height: 1-7/8"<br>Use with Oregon® 30-941 foam pre-cleaner | |
| **30-091** | 32972 | **Air Filter**<br>Fits TVS90, TVS105, H30, H35, ECH90,<br>LAV40, LAV50, & ECV series<br>For series 3–5 HP<br>Length: 3", dia.: 2", neck dia. & length: 3/4" x 1" | 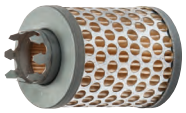 |
| **30-100** | 33268<br>John Deere N49746 | **Air Filter**<br>Fits HM70, H80, HM80, VM80, & HM100 series<br>For 7, 8, & 10 HP horizontal engines<br>OD: 4-1/2", ID: 1-1/2", height: 2-1/4"<br>Use with Oregon® 30-936 foam pre-cleaner | |
| **30-841** | | **Shop Pack** - (5) of 30-100 | |
| **30-142** | 34700<br>34200A<br>34200B | **Air Filter**<br>Fits HM70 to HM100<br>For 8 HP horizontal engines<br>4-1/2" H x 2-7/8" Dia.<br>Bottom ID: 1-3/16", top ID: 1/4" | |
| **30-141** | 34782<br>34782A<br>34782B | **Air Filter**<br>Fits HS40, HS50, H50, H70, TVS840,<br>TVXL105, & 120<br>Height: 3-1/2", diameter: 2- 7/8", top ID: 1/4"<br>Use with Oregon 30-116 foam pre-cleaner | |
| **30-301** | 35066<br>Sears 63087A<br>Sears 10096<br>John Deere AM123992 | **Air Filter**<br>Fits ECV, LEV115, ECV120, H30, 35, & TVS series<br>For 3.5 & 4 HP vertical engines<br>OD: 1-3/4", ID: 13/16", height: 2-7/8" | |
| **30-801** | | **Shop Pack** - (5) of 30-301 | |
| **69-034** | | **Blister Pack** - (1) of 30-301 | |
| **30-111** | 35403 | **Air Filter**<br>Fits OVXL120, TVXL195, OVXL125, OHV 12, 13, 125, & 200 series<br>For 12 HP vertical engines<br>Length: 8", width: 2", height: 2-1/2"<br>Mtg. holes: 2-5/8" center to center<br>Use with Oregon 30-951 foam pre-cleaner | |
| **30-842** | | **Shop Pack** - (5) of 30-111 | |

A

# Air Filters

| OREGON | Replaces | Description | Product Code |
|---|---|---|---|

## Tecumseh Paper Filters

| | | | |
|---|---|---|---|
| **30-112** | 35500 | **Air Filter**<br>Fits TVS90, TVS100, TVS120, TVXL105, TVXL120, OVRM40, OVRM50, OVRM120, & ECV 100 series<br>For 3–5 HP vertical engines with panel filter<br>Length: 7-3/16", width: 2-1/4", height: 3/4"<br>Use with Oregon 30-115 foam pre-cleaner | |
| **30-740** | 36046 | **Air Filter**<br>Fits OHH45, OHH50, VLV126, VLV40, VLV50, VLV55, VLV60, VLV65, VLV66, VLXL50, & VLVXL55<br>For 4 & 5 HP engines<br>Length: 3-3/8", width: 3-3/4", height: 1-1/4" | |
| **30-807** | | **Shop Pack** - (5) of 30-740 | |
| **30-024** | 36356 | **Air Filter**<br>Fits OHV110, OHV115, OHV120, OHV125, OHV130, OHV135, OHV140, OHV14, OHV145, OHV15, OHV150, OHV155, OHV160, OHV165, OHV170, OHV17, & OHV 175 model engines<br>Length: 7-1/8", width: 2-1/4" & 2-7/8", height: 3"<br>Use with Oregon® 30-525 foam pre-cleaner & 30-952 | |
| **30-850** | | **Shop Pack** - (5) of 30-024 | |
| **30-030** | 36745 | **Air Filter**<br>For 5.5 HP Centura engines<br>Length: 2-3/4", width: 1-3/4", height: 2-1/8" | |
| **30-840** | | **Shop Pack** - (5) of 30-030 | |
| **30-031** | 36905 | **Air Filter**<br>Fits 65, RVS115, & 120<br>For 5.5 HP Tecumseh & Craftsman<br>Length: 2-3/4", width: 1-3/4", height: 2-7/8" | |
| **30-817** | | **Shop Pack** - (5) of 30-031 | |
| **69-331** | | **Blister Pack** - (1) of 30-031 | |
| **30-443** | 37360 | **Air Filter**<br>Fits OV, TVT, & VTX series engine<br>Length: 7-1/4", width: 7", height: 1-1/4" | |
| **30-711** | 450247 | **Air Filter**<br>Fits TVS840, TVSXL840, TVXL840, & TC200-300 engines<br>For 4 HP, 2-cycle engines models<br>(Previously Oregon 30-110) | |

A

| OREGON | Replaces | Description | Product Code |
|---|---|---|---|

## Tecumseh Foam Filters

| | | | |
|---|---|---|---|
| **30-083** | 29961 | **Foam Air Filter**<br>Fits LAV 40, 50. H30, 35, 40, 50, 70, HH60, 70, HM100, HS40, 50, & TVM140 series<br>For 3, 3-1/2, 4, & 5 HP vertical & horizontal engines<br>Length: 3-1/4", width: 2-5/8", height: 2-1/4" | |
| **30-205** | 31700 | **Foam Air Filter**<br>Fits LAV, H, HS, VH, & HM series<br>For 3–8 HP vertical & horizontal engines, tiller application<br>Diameter: 3-1/2", height: 2-3/16" | 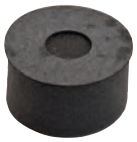 |
| **30-941** | 32906 | **Foam Pre-Cleaner**<br>Length: 9", width: 1-3/4"<br>Use with Oregon 30-080<br>Pre-oiled foam pre-cleaner | |
| **30-117** | 34340 | **Foam Air Filter**<br>Fits TVS75, TVS90, TVS105, & TVS120<br>Length: 5-1/8", width: 1-1/2", height: 1-5/8"<br>Pre-oiled foam filter | |
| **30-116** | 34783 | **Foam Pre-Cleaner**<br>Length: 5", width: 3-3/4"<br>Use with Oregon® 30-141<br>Pre-oiled foam filter | |
| **30-951** | 35404 | **Foam Pre-Cleaner**<br>Length: 8-1/2", width: 2"<br>Use with Oregon 30-111<br>Pre-oiled foam pre-cleaner | |
| **30-952** | 36357 | **Foam Pre-Cleaner**<br>Length: 8", width: 2-7/8"<br>Use with Oregon 30-024<br>Pre-oiled foam pre-cleaner | |

## Toro

| | | | |
|---|---|---|---|
| **55-227** | 43-9730 | **Felt Air Filter with Rubber Seal**<br>For handheld blowers<br>Length: 4", width: 2-7/8" | 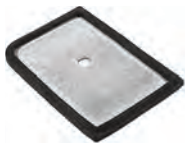 |
| **30-959** | 63-9380 | **Foam Air Filter**<br>For 2-cycle Suzuki 1988 and newer models<br>Length: 6-1/2", width: 3-3/8", height: 1-1/8"<br>Pre-oiled foam air filter | |

A

# Air Filters

| OREGON | Replaces | Description | Product Code |
|---|---|---|---|

## Toro

| | | | |
|---|---|---|---|
| **30-954** | 81-0100 | **Foam Air Filter**<br>For 2-cycle Suzuki engine consumer walk-behind mower models prior to 1988<br>Length: 6-1/2", width: 3-5/8", height: 1-1/4"<br>Pre-oiled foam filter | |
| **30-421** | 81-4120 | **Foam Air Filter**<br>For 4-cycle overhead valve Suzuki engines<br>Length: 7", width: 1-7/8", height: 1-1/8"<br>Pre-oiled foam filter | |
| **30-657** | 120-4308<br>127-9193 | **Air Filter** – NEW<br>Fits Toro XLS 380 lawn tractor, Timecutter SS3200, SS3216, SS4216, & ZS3200S<br>Length: 6-1/4", width: 2-1/2", height: 3-1/4" | |

## Wheel Horse

| | | | |
|---|---|---|---|
| **30-430** | NN10774 | **Air Filter**<br>For 520 tractor and others with Onan engines<br>OD: 8-1/4", ID: 6-3/8", height: 2-1/4"<br>Use with Oregon 30-953 foam pre-cleaner | |

## Wisconsin

| | | | |
|---|---|---|---|
| **30-102** | L0188<br>John Deere AM100137<br>Gravely 21333<br>1446-G1 (EZ-Go) | **Air Filter**<br>OD: 4-1/4", ID: 2", height: 6" | |
| **30-080** | L0194A<br>Cub Cadet 385168R2<br>John Deere AM31400<br>Kohler 235116<br>Gravely 010900<br>Gravely 043954<br>Tecumseh 32008 | **Air Filter**<br>Fits K241, K301, & K321 series<br>For 10, 12, & 14 HP engines<br>OD: 6-1/16", ID: 4-3/4", height: 1-7/8"<br>Use with Oregon® 30-941 foam pre-cleaner | |

## Wisconsin Robin (Subaru)

| | | | |
|---|---|---|---|
| **30-410** | EY2273280317<br>EY2273280307 | **Air Filter**<br>Fits W1-145V, W1-185V<br>For 4 HP & 5 HP 4-cycle engines, Snapper mowers<br>OD: 3-9/16", height: 2-3/8"<br>Top ID: 5/16", Bottom ID: 1-5/16" | 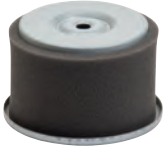 |
| **30-412** | EY1573620101 | **Air Filter**<br>Fits WT1-125V<br>For 4 HP 2-cycle engines, Snapper mowers<br>OD: 3-1/8", ID: 2-1/4", height: 2-1/2"<br>Includes foam pre-cleaner | |

A

| OREGON | Replaces | Description | Product Code | |
|---|---|---|---|---|

## Wisconsin Robin (Subaru)

| | | | | |
|---|---|---|---|---|
| **30-413** | EY2273261007 | **Air Filter**<br>Fits W1-185<br>For 6 & 8 HP horizontal engines<br>Bottom OD: 4-1/4"<br>Top OD: 2-5/8", height: 2-1/2"<br>Includes foam pre-cleaner | | |
| **30-414** | EY2063260107 | **Air Filter**<br>Fits EY18-3W<br>For 5 HP horizontal engines<br>Bottom OD: 3-1/2"<br>Top OD: 2-1/2", height: 2-1/2"<br>Includes foam pre-cleaner | | |
| **30-418** | EY2263261007 | **Air Filter**<br>Fits WI-145<br>Top OD: 2"<br>Bottom OD: 3-3/4", height: 2-3/8"<br>Includes foam pre-cleaner | | |
| **30-419** | EY2073260618 | **Air Filter**<br>Fits WI-390, EY25W, & EY27W engines<br>Top OD: 2-1/2"<br>Bottom OD: 4-13/16", height: 3-1/4"<br>Includes foam pre-cleaner | | |
| **30-423** | EY2343260407 | **Air Filter**<br>Fits WI-280 engine<br>Top OD: 2-1/2"<br>Bottom OD: 4-5/8"  H: 3-3/8"<br>Includes foam pre-cleaner | | |
| **30-713** | 106-32704-07 | **Air Filter**<br>Fits EC-10 & EZ-08 engines<br>OD: 2-3/8", height: 2-1/4"<br>Includes pre-filter | | |
| **30-717** | RA-263-32610-01 | **Air Filter**<br>Fits EH63, EH64, & EH65<br>OD: 6-13/16", ID: 5-1/2", height: 2-3/8" | | |
| **30-650** | 20B-32610-H7<br>20B-32610-J7 | **Air Filter** – NEW<br>Fits Robin EX35-40<br>Length: 7-1/4", width: 4-3/16", height: 1" | | |

A

# Air Filters

| OREGON | Replaces | Description | Product Code |
|---|---|---|---|

## Wisconsin Robin (Subaru) Foam Filters

| | | | |
|---|---|---|---|
| **30-162** | Robin 252-32614-08 | **Air Filter**<br>Fits Robin EH122D engine<br>For multiquip tampers<br>OD: 3-5/8", ID: 2-1/2", height: 1-5/8"<br>Includes foam pre-cleaner | |
| **30-924** | EY2353261008 | **Foam Pre-Cleaner**<br>Length: 7-3/4", width: 2-3/4"<br>Use with Oregon 30-411<br>Pre-oiled foam pre-cleaner | |
| **30-968** | RS227-36002-03 | **Foam Air Filter**<br>Fits EY20 engines<br>Length: 4-3/4", width: 3-1/4", height: 1-1/8"<br>Pre-oiled foam air filter | |

A

## Standard Bearing to Oregon Magnum Bearing

| Oregon® Standard Bearing | Oregon Magnum Bearing | Reference Number |
|---|---|---|
| 45-005 (OBS) | 45-256 | 6203-2RS-3/4 |
| 45-032 (OBS) | 45-227 | 6205-2RS |
| 45-033 (OBS) | 45-220 | 6305-2RS |
| 45-054 (OBS) | 45-254 | 6202-1RS |
| 45-126 (OBS) | 45-225 | RA100R |
| 45-158 (OBS) | 45-260 | 499502H |
| 45-195 (OBS) | 45-295 | Z9504AB |
| 45-202 (OBS) | 45-242 | 99502H |
| 45-203 (OBS) | 45-243 | 6203-2RS-5/8 |
| 45-204 (OBS) | 45-259 | 6204-2RS |
| 45-400 (OBS) | 45-257 | 6203-2RSC3 |
| 45-401 (OBS) | 45-220 | 6305-2RS |
| 45-403 (OBS) | 45-259 | 6204-2RS |
| 45-624-0 (OBS) | 45-257 | 6203-2RSC3 |

## Standard Ball Bearings

| OREGON | O.D. | I.D. | Reference No. | Width | Product Code |
|---|---|---|---|---|---|
| 45-025 | 1.125 | 0.5 | R8-RS | 0.313 | |
| 45-257 | 1.574 | 0.669 | 6203-2RSC3 | 0.470 | |
| 45-004 | 32 mm | 15 mm | 6002-NSL-2RS | 0.352 | |

## Tapered Roller Bearings & Races

| OREGON | O.D. | I.D. | Reference No. | Width | Product Code |
|---|---|---|---|---|---|
| 45-205 | 1.781 | 0.748 | LM11949 | 0.661 | |
| 45-206 | 1.7812 | - | LM11910 | 0.475 | |
| 45-002 | 1.988 | 1.000 | L44643/L44610 | 0.608 | |

## Wheel Bearings

| OREGON | O.D. | I.D. | Reference No. | Width | Product Code |
|---|---|---|---|---|---|
| 45-208 | 1.375 | 0.563 | 1622-2BS-NR | 0.438 | |
| 45-130 | 1.574 | 0.669 | 6203-2RS-NR | 0.471 | |

## Caged Roller Bearings

| OREGON | O.D. | I.D. | Reference No. | Width | Product Code |
|---|---|---|---|---|---|
| 45-060 | 1.375 | 0.750 | – | 3.750 | |
| 45-014 | 1.335 | 0.750 | – | 2.455 | |

## Extended Race Bearing with Set Screw

| OREGON | O.D. | I.D. | Reference No. | Width | Product Code |
|---|---|---|---|---|---|
| 48-211 | 1.575 | 0.625 | SB202-10 | 0.870 | |
| 45-048 | 2.051 | 0.875 | SB205-14 | 1.100 | |

# Bearings & Bushings

## Extended Race

| OREGON | O.D. | I.D. | Reference No. | Width | Product Code |
|---|---|---|---|---|---|
| 45-050 | 1.850 | 0.750 | SA204-12 | 0.553 | |

## Oregon® Magnum Ball Bearings

| OREGON | O.D. | I.D. | Reference No. | Width | Product Code |
|---|---|---|---|---|---|
| 45-216 | 1.102 | 0.472 | 6001-2RS | 0.315 | |
| 45-253 | 1.260 | 0.472 | 6201-2RS | 0.394 | |
| 45-242 | 1.374 | 0.625 | 99502H | 0.430 | |
| 45-260 | 1.375 | 0.625 | 99502H | 0.431 | |
| 45-272 | 1.375 | 0.437 | 1620-2RS | 0.437 | |
| 45-254 | 1.378 | 0.591 | 6202-1RS | 0.433 | |
| 45-255 | 1.378 | 0.591 | 6202-2RS | 0.433 | |
| 45-267 | 1.380 | 0.500 | 1621-2RS | 0.437 | |
| 45-257 | 1.568 | 0.669 | 6203-2RSC3 | 0.472 | |
| 45-243 | 1.574 | 0.625 | 6203-2RS-5/8 | 0.471 | |
| 45-256 | 1.574 | 0.750 | 6203-2RS-3/4 | 0.476 | |
| 45-241 | 1.654 | 0.591 | 6302-2RS | 0.512 | |
| 45-268 | 1.750 | 0.880 | 8186-2RS | 0.500 | |
| 45-295 | 1.781 | 0.750 | Z9504AB | 0.608 | |
| 45-244 | 1.850 | 0.669 | 6303-2RS | 0.551 | |
| 45-259 | 1.850 | 0.787 | 6204-2RS | 0.555 | |
| 45-227 | 2.048 | 0.984 | 6205-2RS | 0.590 | |
| 45-264 | 2.048 | 0.984 | 6205-RSTC4 | 0.590 | |
| 45-269 | 2.000 | 1.000 | 1641-2RS | 0.560 | |
| 45-271 | 2.000 | 1.000 | 8466-2RS | 0.560 | |
| 45-263 | 2.046 | 1.000 | RA100RR7 | 0.707 | |
| 45-225 | 2.046 | 1.000 | RA100RR | 0.846 | |
| 45-245 | 2.047 | 0.787 | 6304-2RS | 0.591 | |
| 45-270 | 2.190 | 1.450 | 8276-1RSW | 0.630 | |
| 45-220 | 2.437 | 0.987 | 6305-2RS | 0.670 | |
| 45-207 | 2.440 | 1.181 | 6206-2RS | 0.625 | |
| 45-249 | 3.937 | 1.772 | 6309-2RS | 0.984 | |

## Flanged Wheel Bearings

| OREGON | O.D. | I.D. | Width | Product Code |
|---|---|---|---|---|
| 45-012 | 1-3/8 | 1/2 | .527 | |
| 45-112 | 1-1/8 | 1/2 | .435 | |
| 45-038 | 1-3/8 | 1/2 | .487 | |
| 45-047 | 1-3/8 | 5/8 | .487 | |
| 45-058 | 1-3/8 | 5/8 | .521 | |
| 45-034 | 1-3/8 | 3/4 | .523 | |
| 45-010 | 1-3/8 | 3/4 | .487 | |

## Heavy-Duty Flanged Wheel Bearings

| OREGON | O.D. | I.D. | Width | Product Code |
|---|---|---|---|---|
| 45-000** | 1-3/8 | 3/4 | 0.487 | |
| 45-234 | 1-3/8 | 3/4 | 0.487 | |
| 45-258 | 1-3/8 | 5/8 | 0.487 | |

** Sealed bearing

| OREGON | Replaces | Description | Product Code |
|---|---|---|---|

## Universal

| | | | |
|---|---|---|---|
| **45-620** | K & S 706-16274 | **Bearing**<br>For edger shaft<br>Fits 6200ZZ, K & S (Trim-All), & others<br>OD: 1.181", ID: .3939", width: .3543" | |
| **45-205** | Ariens 54045<br>Bolens 1185275<br>Cub Cadet 651814R1<br>John Deere JD-8226<br>Gravely 018446<br>Gravely 18446<br>Exmark 1-633585 | **Tapered Roller Bearing**<br>Std. No. LM11949<br>Bore: .748"<br>Use with Oregon® 72-735 & 72-736 wheel assembly | |
| **45-206** | Ariens 54044<br>Bolens 1185276<br>Cub Cadet 651815R91<br>John Deere JD-8188<br>Gravely 018445<br>Gravely 18445<br>Exmark 1-633584 | **Race**<br>Std. No. LM11910<br>OD: 1.7812" | |
| **45-019** | K & S 706-18796<br>MTD 706-16276<br>Velke 3999 | **Bushing**<br>For edger shafts, K&S edgers & others, & Velke wheel bushing<br>OD: 3/4", ID: 1/2", width: 3/4", flange OD: 15/16"<br>Thickness: 1/8" | |
| **45-014** | Bobcat 38042N<br>Tilden 53-217 | **Caged Roller Bearing**<br>Fits Oregon 72-752 & 72-753 for Gravely wheel assembly<br>OD: 1.335", ID: .750", width: 2.455" | |
| **45-015** | Bobcat 48250<br>Exmark 513810<br>Tilden 53-164 | **Bushing**<br>Fits Oregon 72-732 for Gravely wheel assembly<br>OD: 1.383", ID: .750", width: .375"<br>Use with Oregon 45-014 | |

## AMF (See Noma)
## Ariens

| | | | |
|---|---|---|---|
| **45-275** | 05500111 | **Flange Bushing**<br>Fits snow throwers friction drive<br>OD: 0.750", ID: 0.625", width: 0.50", flange 0.875" | |
| **45-006** | 55035<br>05503500 | **Bushing**<br>For snow thrower auger shaft<br>Fits models 924036, 924038, 924039, 924040, 924046, 924048, 924050, 924071, 924072, & 924073<br>OD: 1.26", ID: 1", width: .624", flange: 1.502" x 1/8" | |
| **45-007** | 55039<br>05503900 | **Bushing**<br>For snow thrower auger shaft<br>Fits 923001, 923004, 923006, 923014, 923017, 923018, 923019, 923020, 923022, & 923023<br>OD: 1.003", ID: .732", width: .625", flange: 1.25" x 5/32" | |

B

# Bearings & Bushings

| OREGON | Replaces | Description | Product Code | |
|---|---|---|---|---|
| **Ariens** | | | | |
| **45-008** | 55110<br>05511000 | **Bushing**<br>OD: 3/4", ID: 1/2", width: 5/8", flange: 1" x 1/8" | | |
| **45-009** | 55112<br>05511200 | **Bushing**<br>For snow thrower impeller shaft<br>Fits 924046, 924048, 924050, 924072, 924073, 924071, 924036, 924038, 924039, 924040, & 924074<br>OD: 1.0016", ID: .753", width: .7531", flange: 1.25" x .125" | | |
| **45-013** | 55030<br>05503000 | **Bushing**<br>Fits models 910 & 924 series<br>OD: 1", ID: 7/8", width: 5/8", flange: 1-1/4" x 1/8" | | |
| **45-003** | 55028<br>05502800 | **Bushing**<br>OD: 1.135", ID: .760", width: .765", flange: 1.325" x .108" | | |
| **45-206** | 54044<br>05404400 | **Race**<br>Use with Oregon® 45-205 roller bearing<br>OD: 1.7812" | | |
| **45-205** | 54045<br>05404500 | **Tapered roller bearing**<br>Fits intermediate mower drive bearing for 38" (1983-89) models 935009, 13, 14, & 20, worm shaft bearing on some front tine and all rear tine tillers, & impeller shaft bearing on snowblowers with cast iron gear case.<br>Use with Oregon 45-206<br>Bore: .748" | | |
| **45-035** | 54063<br>05406300 | **Bearing**<br>Fits snow thrower input shaft support bearing models 824, 932, & 1032, models in series: 924022, 024, 026, 028, 029, 032, 046, 048, 050, 072, 074, 075, & 079<br>OD: 1-3/4", ID: 3/4", width: 1/2" | | |
| **45-002** | 54069<br>05406900 | **Tapered Roller Bearing and Race Kit**<br>For tine shaft bearing on rear tine tillers and many front tine models<br>OD: 1.988", ID: 1", width: .608" | | |
| **45-267** | 05408000 | **Ball Bearing**<br>Fits self-propelled mower friction drives 1621-2RS<br>OD: 1.38", ID: 0.50", width: 0.437" | | |
| **45-000** | 54089<br>05408900 | **Flanged Wheel Bearing**<br>Fits rear-height adjuster bearing on walk-behind mower model 911013, front-wheel bearings on 1983 thru 1988 tractor models: 934001–004<br>OD: 1-3/8", ID: 3/4" | | |

B

| OREGON | Replaces | Description | Product Code | |
|---|---|---|---|---|
| **Ariens** | | | | |
| **45-268** | 05409300 | **Ball Bearing**<br>Fits snow thrower auger 8186-2RS<br>OD: 1.75", ID: 0.88", width: 0.50" | | |
| **45-269** | 05416000 | **Ball Bearing**<br>Fits self-propelled mower friction drive 1641-2RS<br>OD: 2.00", ID: 1.00", width: 0.56" | | |
| **45-010** | 54162<br>05416200 | **Bearing**<br>For rear-height adjuster bearing on walk-behind mower<br>Fits model 911022<br>OD: 1-3/8", ID: 3/4" | | |
| **45-270** | 05417700 | **Ball Bearing**<br>Fits snow thrower wheel drive 8276-1RSW<br>OD: 2.19", ID: 1.45", width:0.63" | | |
| **45-271** | 05418200 | **Ball Bearing**<br>Fits snow thrower auger & drive 8466-2RS<br>OD: 2.00", ID: 1.00", width: 0.56" | | |
| **45-272** | 05435200 | **Ball Bearing**<br>Fits snow thrower friction drive 1620-2RS<br>OD: 1.375", ID: 0.437", width: 0.437" | | |
| **45-257** | 54188<br>05418800 | **Bearing**<br>Fits double-aluminum intermediate drive pulley<br>on 93700 series snowblowers<br>OD: 1.574", ID: .669", width: .47" | | |
| **45-098** | 55058<br>05505800 | **Bushing**<br>For wheel<br>OD: 1-3/8", ID: 3/4", width: 3/4" | | |
| **AYP / Roper / Sears / EHP** | | | | |
| **45-079** | AYP 625J<br>AYP 66507 | **Bushing**<br>OD: 1.375", ID: .75", width: .625" | | |
| **45-073** | AYP 3366R | **Plastic Flange Bushing**<br>OD: 0.875", ID: .75", width: .75" | | |

B

# Bearings & Bushings

| OREGON | Replaces | Description | Product Code |
|---|---|---|---|

## AYP / Roper / Sears / EHP

| | | | |
|---|---|---|---|
| **45-087** | AYP 64906 | **Bushing**<br>OD: 1.125", ID: .625", width: .75" | |
| **45-205** | AYP 1553H | **Tapered Roller Bearing**<br>Use with Oregon® 45-206<br>ID: .748" | |
| **45-206** | AYP 1554H | **Race**<br>Use with Oregon 45-205<br>OD: 1.7812" | |
| **45-057** | AYP 9040H<br>AYP 9040HR<br>AYP 5920H<br>Snapper 1-4483 | **Bushing**<br>Fits front wheel on most lawn and garden tractors<br>OD: 1-3/8", ID: 3/4", width: 1" | |
| **45-128** | AYP 126847X<br>AYP 102792X<br>AYP 120382X<br>AYP 120754X<br>AYP 126847X<br>AYP 532120754<br>AYP 123848X | **Bushing**<br>For drag link on front engine riders | |
| **45-257** | AYP 110485X<br>AYP 697H | **Bearing**<br>For top bearing in triangle-style quill assembly, Oregon 82-225<br>Fits Oregon 82-677, 82-678, & 82-691 quill assemblies<br>OD: 1.574", ID: .669", width: .47" | |
| **45-144** | AYP 532155106 | **Bushing**<br>For steering on many lawn tractors | |

## Bobcat

| | | | |
|---|---|---|---|
| **45-078** | 33014A | **Bearing Sleeve**<br>OD: 1", ID: 3/4", width: 1-3/4" | |
| **45-220** | 35008N<br>Ferris 1520828<br>Ferris 1520828S | **Bearing**<br>Improved quality precision<br>Fits top & bottom bearing on spindle assembly 6305-2RS<br>OD: 2.4375", ID: .987", width: .670" | |

B

## Bobcat

| OREGON | Replaces | Description | Product Code |
|---|---|---|---|
| **45-014** | 38042N | **Caged Roller Bearing**<br>For models with 61" & 74" decks<br>Fits wheel 48297, Oregon® wheels 72-752 & 72-753<br>Use with Oregon 45-015 bushing<br>OD: 1.335", ID: .75", width: 2.455" | |
| **45-015** | 48250 | **Wheel Bushing**<br>Use with Oregon 45-014<br>OD: 1.383", ID: .75", width: .375" | |
| **45-031** | 148042 | **Flanged Wheel Bearing**<br>OD: 2.002", ID: 1.007", width: .671" | |
| **48-320** | 48053-2A<br>Scag 48100-02 | **Bushing**<br>Fits Oregon 48-207 caster support arm<br>OD: 1-1/4", ID: 1", width: 3/4"<br>Flange dia.: 1-5/8", thickness: 1/8" | |
| **48-211** | 35062B | **Bearing**<br>With lock collar<br>For gearbox support bearing on 36" & 48" variable & 5-speed walk-behinds<br>OD: 1.335", ID: .625", width: .87" | |
| **09-801** | 64163-14 | **Spacer**<br>OD: 1-1/4", ID: 3/4", width: 1/4" | |
| **09-803** | 64163-22 | **Caster Yoke Spacer**<br>OD: 1-3/4", ID: 1", thickness: 1/2" | |
| **09-802** | 64163-12<br>303164 | **Spacer**<br>For spindle washer<br>OD: 1", ID 5/8", width: 1/4" | |
| **09-804** | 64163-22A<br>Exmark 303314 | **Spacer**<br>For 36" and 48" variable & 5-speed mowers with 9" wheels, 32", 36", 48", & 61" mowers with 280/250-4 wheels<br>Use with front casters on ZTR 61" & 74" riders<br>OD: 1-1/2", ID: .7/8", width: 1/2" | |
| **45-257** | 48094A<br>Lawn Boy 703275<br>Gilson 236544 | **Bearing**<br>Use in Oregon 82-215 quill assembly<br>OD: 1.574", ID: .669", width: .47" | |

B

# Bearings & Bushings

| OREGON | Replaces | Description | Product Code | |
|---|---|---|---|---|
| **Bobcat** | | | | |
| **45-188** | 43180<br>Scag 43022 | **Spanner Bushing**<br>Fits Oregon® 72-707 & 72-795 wheels<br>OD: 5/8", ID: 1/2", length: 4-1/16" | | |
| **45-053** | Scag 481769 | **Bearing Kit**<br>Fits Oregon 72-795<br>Bearing: OD: 1-3/8", ID: 5/8", length: 3-1/4"<br>Bushing: OD: 1-3/8", ID: 5/8"<br>Includes open cage bearing and two bushings | | |
| **45-121** | 38273 (bearing)<br>38274 (retainer) | **Wheel Bearing Kit**<br>Fits Oregon 72-706 | | |
| **45-063** | 148042 | **Flanged Wheel Bearing**<br>Heavy-Duty<br>For front caster wheels<br>OD: 2", ID: 1", flange OD: 2-1/8", width: 1/2" | | |
| **Bunton** | | | | |
| **45-220** | Bobcat 35008N<br>Ferris 1520828<br>Ferris 1520828S | **Bearing**<br>Improved quality precision<br>For top & bottom bearing on spindle assembly 6305-2RS<br>OD: 2.4375", ID: .987", width: .670" | | |
| **45-242** | PL4969 | **Bearing**<br>Fits new style mowers<br>OD: 1.374", ID: .625", width .43" | | |
| **45-010** | PL0941 | **Flanged Wheel Bearing**<br>Fits Oregon 72-760 wheel,<br>For 36" through 61" walk-behinds<br>OD: 1.375", ID: .75", width: .487" | | |
| **48-211** | PL0878<br>John Deere PT8892 | **Bearing**<br>OD: 1.575", ID: 5/8", width: .870" | | |
| **09-801** | PL0417 | **Spacer**<br>For 6" wheel on old style 32", 36", 48", & 52" mowers<br>OD: 1-1/4", ID: 3/4", width: 1/4" | | |
| **45-078** | PL0458 | **Bearing Sleeve**<br>OD: 1", ID: 3/4", width: 1-7/8"<br>Center ID: 3/8", thickness: 1/8" | | |

B

| OREGON | Replaces | Description | Product Code | |
|---|---|---|---|---|
| **Case** | | | | |
| **45-000** | C-12110 | **Flanged Wheel bearing**<br>OD: 1.375", ID: .75", width: .479" | | |
| **Country Clipper** | | | | |
| **45-227** | C-2897<br>Grasshopper 8332101<br>Grasshopper 110082<br>Toro 25-11257 | **Bearing**<br>OD: 2.045", ID: .987", width: .600"<br>Also fits Grasshopper model 6372 | | |
| **Cub Cadet** | | | | |
| **45-000** | 384881-R93 | **Flanged Wheel Bearing**<br>OD: 1.375", ID: .75", width: .479" | | |
| **45-205** | 651815R91 | **Tapered Roller Bearing**<br>Use with Oregon® 45-206<br>ID: .748" | | |
| **45-206** | 651814R1 | **Race**<br>Use with Oregon 45-205<br>OD: 1.781" | | |
| **45-295** | 465003R91<br>470880R91 | **Bearing**<br>Spindle bearing for mowers<br>OD: 1.781", ID: .75", width: .6075" | | |
| **45-130** | 941-0563 | **Bearing**<br>Fits 6203-2RSNR with snap ring<br>OD: 1.574", ID: .669", width: .471" | | |
| **45-276** | 741-0494 | **Flange Bushing**<br>Fits 31A model series snow throwers (1990–2014)<br>OD: 1.16", ID: 1.05" | | |
| **45-280** | 741-0661B<br>741-0661A<br>741-0661 | **Flange Bearing**<br>Fits 31A model series snow throwers (2000–2014)<br>OD: 1.0", ID: 0.754" | | |
| **45-281** | 741-0662 | **Flange Bearing**<br>Fits 31A model series snow throwers (1997–2014)<br>OD: 1.00", ID: 0.75", width: 0.50" | | 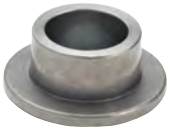 |

B

# Bearings & Bushings

| OREGON | Replaces | Description | Product Code | |
|---|---|---|---|---|
| **Cub Cadet** | | | | |
| **45-279** | 741-0663 | **Flange Bearing**<br>Fits 31A model series snow throwers (1997–2014)<br>ID: .50", OD: .75", width: 0.925" | | |
| **45-278** | 941-0170<br>741-0170 | **Flange Bearing**<br>Fits 31A model series snow throwers (2012–2014)<br>ID: 1.00" w/ flats | | |
| **45-130** | 941-0563<br>741-0563 | **Bearing**<br>Fits 31A snow throwers (1990–2014)<br>OD: 1.576'', ID: 0.669", width: 0.473"<br>Reference No.: 6203-2RSNR with snap ring | | |
| **Dixon** | | | | |
| **45-295** | 6011 | **Bearing**<br>Spindle bearing for mowers<br>OD: 1.781", ID: .75", width: .6075" | | |
| **45-058** | | **Flanged Wheel Bearing**<br>Fits Dixon wheel 1022, Oregon® 72-765<br>OD: 1.375", ID: .625", width: .521" | | |
| **45-225** | 1701<br>John Deere JD8597<br>Dixie Chopper 30218 | **Bearing**<br>For spindle assembly<br>Fits 30", 40", & 50" ZTR chain drive<br>OD: 52 mm, ID: 1", width: 21.50 mm<br>Prior to 1999, 2.046" x 1", No. RA100-RR | | |
| **Excel (see Hustler)**<br>**Encore** | | | | |
| **45-127** | 363007<br>Exmark 303044<br>Scag 48100-01<br>Snapper 7-6514 | **Bushing**<br>For caster support arm<br>Fits Oregon 48-203 & steering-shaft bushing for pivot wheel on 12, 13, & 17 HP Turf Runner<br>Flange OD: 1-1/2", OD: 1-1/8", ID: 7/8", length: 1" | | |
| **45-031** | 363187 | **Flanged Wheel bearing**<br>Fits Encore wheel 362048<br>OD: 2.002", ID: 1.007", width: .671" | | |
| **45-220** | Bobcat 35008N<br>Ferris 1520828<br>Ferris 1520828S | **Bearing – Heavy-Duty**<br>Improved quality & precision for spindles<br>For top & bottom bearing on spindle assembly<br>OD: 2.4375", ID: .987", width: .670"<br>Reference No.: 6305-2RS | | |

B

## Exmark

| OREGON | Replaces | Description | Product Code |
|---|---|---|---|
| **45-015** | 513810 | **Bushing**<br>Fits wheel 45205, Oregon® 72-732<br>Use with Oregon 45-014<br>OD: 1.383", ID: .75", width: .375" | |
| **09-802** | 303164<br>Bobcat 64163-12<br>Bobcat 303164 | **Bushing**<br>OD: 1", ID: 5/8", width: 1/4" | |
| **09-804** | 303314<br>Bobcat 503314<br>Bobcat 64163-22A | **Spacer**<br>For 36" & 48" variable and 5-speed mowers with 9" wheels, & 32", 36", 48", & 61" mowers with 280/250 4 wheels. Use with front casters on ZTR 61" & 74" riders<br>OD: 1-1/2", ID: 7/8", width: 1/2" | |
| **45-127** | 303044<br>Encore 363007<br>Scag 48100-01<br>Snapper 7-6514 | **Bushing**<br>For caster support arm & pivot-wheel steering shaft on 12, 13, & 17 HP Turf Runner<br>Fits Oregon 48-203<br>Flange OD: 1-1/2", OD: 1-1/8", ID: 7/8", length: 1" | |
| **45-040** | 513336 | **Bushing**<br>For Turf Ranger deck support<br>OD: 1.25", ID: 15/16", width: 11/16" | |
| **45-205** | 633585 | **Tapered Roller Bearing**<br>Fits intermediate mower drive bearing on 38" models 935009, 13, 14, & 20 (1983–1989)<br>For worm-shaft bearing on some front tine and all rear tine tillers & impeller-shaft bearing on snowblowers with cast iron gear case<br>Use with Oregon 45-206<br>Bore: .748 | |
| **45-206** | Ariens 54044 | **Race**<br>Use with Oregon 45-205 roller bearing<br>OD: 1.7812" | |
| **48-211** | 303067 | **Bearing**<br>For gearbox support bearing on 36" & 48" variable speed mowers<br>OD: 1.575", ID: .625", width: .870" | |
| **45-220** | 303057<br>303543<br>Bobcat 35008N<br>Ferris 1520828<br>Ferris 1520828S | **Bearing – Heavy-Duty**<br>Improved quality & precision for spindles<br>For top & bottom bearing on spindle assembly<br>OD: 2.4375", ID .987", width: .670"<br>6305-2RS | |
| **45-030** | 303044<br>BB196-369<br>Kees 393194<br>Snapper 7-6514 | **Bushing**<br>For caster yoke support arm<br>Fits Viking, Explorer, Turf Tracer, Turf Ranger and Metro series<br>Flange OD: 1.5", OD: 1.128", ID: .8821", length: 1.250" | |

B

# Bearings & Bushings

| OREGON | Replaces | Description | Product Code |
|---|---|---|---|

## Exmark

| | | | |
|---|---|---|---|
| **45-038** | 631560<br>513009 | **Flanged Wheel Bearing**<br>OD: 1-3/8", ID: 1/2" | |
| **45-060** | 513809 | **Caged Roller Bearing**<br>OD: 1-3/8", ID: 3/4", length: 3-3/4" | |

## Ferris

| | | | |
|---|---|---|---|
| **45-220** | 1520828<br>1520828S<br>Bobcat 35008N<br>Exmark 303057<br>Exmark 303543 | **Bearing – Heavy-Duty**<br>Improved quality & precision for spindles<br>For top & bottom bearing on spindle assembly<br>OD: 2.4375", ID: 987", width: .670"<br>Reference No.: 6305-2RS | |

## Grasshopper

| | | | |
|---|---|---|---|
| **45-404** | 122044 | **Pillow Block Bearing**<br>Fits 700 & 800 series models<br>ID: 1.004", length: 5.490" | |
| **45-258** | 120050 | **Flanged Wheel Bearing**<br>Fits wheels 603924, 483803, 483861, Oregon® 72-770, & 72-771, wheel bearing on decks 9048, 9052, 9061, & 6372, & tail wheel bearing on Gemini 700-series<br>OD: 1-3/8", ID: 5/8", width: .487" | |
| **45-227** | 833210<br>Country Clipper 110082<br>Toro 25-11257 | **Bearing**<br>Fits model 6372<br>OD: 2.045", ID: .987", width: .600"<br>Reference No.: C-28971 | |
| **45-225** | 120081<br>Dixon 1701<br>John Deere JD8597<br>Dixie Chopper 30218 | **Bearing – Heavy-Duty**<br>For spindle assembly<br>Fits 30", 40" and 50" ZTR chain drive<br>OD: 52mm, ID: 1", width: 21.50 mm<br>OD: 2.046", ID: 1" (1999 & older)<br>Reference No.: RA100-RR | |
| **45-047** | 120050<br>MTD 741-0569 | **Flanged Wheel Bearing**<br>Single seal<br>OD: 1-3/8, ID: 5/8, width: .463"<br>Can use with Oregon 45-258 heavy-duty bearing | |
| **45-831** | 282575 | **Deck Mount Bushing**<br>Plastic bushing<br>For front mount decks (1995 & newer)<br>ID: 3/8", width: 3/4", length: 1-5/8", tall: 1-1/4" | |

B

| OREGON | Replaces | Description | Product Code |
|---|---|---|---|

## Grasshopper

| | | | |
|---|---|---|---|
| **45-002** | 38199 | **Bearing and Race Kit**<br>For spindle bearing on 36", 40", & 50" mowers<br>OD: 1.988", ID: 1", width: .608" | |
| **45-010** | 36778<br>11193 | **Flanged Wheel Bearing**<br>Fits wheel 37797, Oregon® 72-780<br>OD: 1.375", ID: .75", width: .487" | |

## Gravely

| | | | |
|---|---|---|---|
| **45-014** | | **Caged Roller Bearing**<br>Fits wheel bearing 45-205, Oregon 72-732<br>For Pro 36", 40", 50", & 60" mowers, 200 & 300 series walk-behinds<br>Use with Oregon 45-015<br>OD: 1.335", ID: .75", length: 2.455" | |
| **45-015** | | **Bushing**<br>Fits wheel 45205 & Oregon 72-732<br>Use with Oregon 45-014<br>OD: 1.383", ID: .75", width: .375" | |
| **45-205** | 18446<br>Gilson 1140<br>Lawn Boy 700417 | **Tapered Roller Bearing**<br>For tiller gear boxes<br>Use with Oregon 45-206<br>ID: .748" | |
| **45-206** | 18445<br>Gilson 1044<br>Lawn Boy 700418 | **Race**<br>For tiller gear boxes<br>Use with Oregon 45-205<br>OD: 1.7812" | |
| **45-267** | 05408000 | **Ball Bearing**<br>Fits self-propelled mower friction drive 1621-2RS<br>OD: 1.38", ID: 0.50", width: 0.437" | |
| **45-269** | 05416000 | **Ball Bearing**<br>Fits self-propelled mower friction drive 1641-2RS<br>OD: 2.00", ID: 1.00", width: 0.56" | |

## Honda

| | | | |
|---|---|---|---|
| **45-004** | 96150-60020-10<br>Code 0876904 | **Bearing**<br>For all commercial mowers<br>OD: 32 mm, ID: 15 mm<br>Bearing is pressed in on both sides of wheel and held by stop | |
| **45-295** | 91102-VA4-0003<br>Code 1688217 | **Spindle Bearing**<br>OD: 1.781", ID: .75", width: .6075" | |

B

# Bearings & Bushings

| OREGON | Replaces | Description | Product Code | |
|---|---|---|---|---|
| **Hustler (Excel)** | | | | |
| **45-064** | 39677 | **Flanged Wheel Bearing**<br>Heavy-Duty<br>For front caster wheels<br>OD: 1-3/4", ID: 3/4", flange OD: 1-7/8", width: 1/2" | | |
| **45-065** | 786103 | **Flanged Wheel Bearing**<br>Heavy-Duty<br>For front caster wheels<br>OD: 1-3/8", ID: 3/4", flange OD: 1-1/2", width: 3/4" | | |
| **45-066** | 631560 | **Flanged Wheel Bearing**<br>Heavy-Duty<br>For front caster wheels<br>OD: 1-3/8", ID: 1/2", flange OD: 1-1/2", width: 1/2" | | |
| **Ingersoll** | | | | |
| **45-207** | C29735 | **Bearing**<br>For PTO clutch | | |
| **Jacobsen** | | | | |
| **48-211** | 551849 | **Bearing**<br>For spindle bearing on 36" & 48" Crew Chief<br>& Crew King mowers<br>OD: 1.575", ID: .625", width: .87" | | |
| **45-220** | 552184<br>Exmark 303057<br>Exmark 303543<br>Bobcat 35008N<br>Ferris 1520828<br>Ferris 1520828S | **Bearing – Heavy-Duty**<br>Improved quality & precision for spindles<br>For top & bottom bearings on spindle assembly<br>OD: 2.4375", ID: .987", width: .670"<br>Reference No.: 6305-2RS | | |
| **45-227** | 310427<br>345050<br>Toro 25-11257<br>John Deere M63810<br>Grasshopper 833210<br>Grasshopper 110082<br>Country Clipper C-28971 | **Bearing**<br>Fits model 6372<br>OD: 2.045", ID: .987", width: .600"<br>Reference No.: 6205-2RS | | |
| **45-207** | 350759 | **Bearing**<br>For Turfcat 72<br>OD: 2.44", ID: 1.181"<br>Reference No.: 6206-2RS | | |
| **45-205** | 500534<br>Gilson 1140<br>Lawn Boy 700417 | **Tapered Roller Bearing**<br>For tiller gear boxes<br>Use with Oregon® 45-206<br>ID: .748" | | |

B

| OREGON | Replaces | Description | Product Code |
|---|---|---|---|

## Jacobsen

| | | | |
|---|---|---|---|
| **45-295** | 375882<br>John Deere JD9296 | **Bearing**<br>For spindles on mowers up to 48"<br>OD: 1.781", ID: .750", width: .610"<br>Reference No.: Z9504AB<br>Use Oregon® 45-402 for heavy-duty applications (FAFNIR) | |

## John Deere

| | | | |
|---|---|---|---|
| **45-206** | JD-8188 | **Race**<br>OD: 1.7812"<br>Reference No.: LM11910 | |
| **45-205** | JD-8226 | **Tapered Roller Bearing**<br>Use with Oregon 72-735 & 72-736 wheel assembly<br>Bore: .748"<br>Reference No.: LM11949 | |
| **45-295** | JD9296<br>JD9239 | **Bearing**<br>Fits spindles on mowers up to 48" cut (1988 & older)<br>OD: 1.781", ID: .750", width: .610"<br>Reference No.: Z9504AB<br>Use Oregon 45-402 for heavy-duty applications (FAFNIR) | |
| **45-000** | AM35443<br>AM118315<br>Snapper 1-5474 | **Flanged Ball Bearing**<br>For screw machine<br>Use in Oregon 51-000<br>OD: 1-3/8", ID: 3/4" | |
| **45-227** | M63810<br>M88251<br>Jacobsen 345050<br>Jacobsen 310427<br>Toro 25-11257<br>Grasshopper 833210<br>Grasshopper 110082<br>Country Clipper C-28971 | **Bearing**<br>Fits model 6372<br>OD: 2.045", ID: .987", width: .600"<br>Reference No.: 6205-2RS | |
| **45-003** | E16522 | **Bushing**<br>For wheel bushing on 65, 66, & 68 series riders, 8, 50, & 80 series dump carts, arm bushing for 50", 160, & 260 rear-mount 3 pt. hitch mowers<br>OD: 1.135", ID: .75", width: .75" | |
| **45-002** | JD8253<br>JD8933 | **Bearing and Race Kit**<br>For gearbox on Model 160 rear mower (up to SN# 505035), bearing on 47" snowblower, model 60 mower, model 400 tractors, & main gear case on 2-stage snowblower<br>OD: 1.988", ID: 1.00", width: .608" | |
| **45-242** | M47144<br>PT8891 | **Bearing**<br>Edger shaft bearing for model 2, 3 and 3K edgers<br>ID: .625", OD: 1.374", Width: .43" | |

B

# Bearings & Bushings

| OREGON | Replaces | Description | Product Code | |
|---|---|---|---|---|

## John Deere

| | | | | |
|---|---|---|---|---|
| **45-010** | PT8894 | **Flanged Wheel Bearing**<br>For wheel PT8639 & Oregon® 72-760<br>OD: 1.375", ID: .75", width: .487" | | |
| **48-320** | M83541 | **Bushing**<br>For caster arm bushing on commercial mowers<br>OD: 1.25", ID: 1.00", width: .75" | | |
| **09-801** | PT8886 | **Spacer**<br>For yoke spacer on early 32", 36", 48", & 52" mowers with 6" wheel assembly<br>OD: 1-1/4", ID: .75", width: 1/4" | | |
| **45-220** | JD9299, M77534<br>JD4467<br>Bobcat 35008N<br>Scag 48101-02<br>Jacobsen 552184<br>Exmark 303543<br>Ferris 1520828<br>Exmark 303057 | **Bearing - Heavy-Duty**<br>Improved quality & precision for spindles<br>For top & bottom bearing on spindle assembly<br>OD: 2.4375", ID: .987", width: .670"<br>Reference No.: 6305-2RS | | |
| **45-225** | JD8597<br>8597<br>Grasshopper 120081<br>Dixon 1701<br>Dixie Chopper 30218 | **Bearing**<br>For spindle assembly, 30", 40", & 50" ZTR chain drive<br>OD: 52 mm, ID: 1", width: 21.50 mm<br>Reference No.: RA100-RR (1999 & older) | | |

## K & S

| | | | | |
|---|---|---|---|---|
| **45-620** | | **Bearing**<br>For edger shaft bearing<br>OD: 1.181", ID: .3939", width: .3543" | | |
| **45-019** | 706-18796 | **Bushing**<br>For edger shafts<br>OD: 3/4", ID: 1/2", width: 3/4", flange OD: 15/16"<br>Thickness: 1/8"<br>Use on K&S edgers and others, Velke wheel bushing | | |

## Lawn Boy / Gilson

| | | | | |
|---|---|---|---|---|
| **45-257** | 703275<br>700479<br>Gilson 236544 | **Bearing**<br>Fits Oregon 82-215 quill assembly<br>OD: 1.574", ID: .669", width: .47" | | |
| **45-205** | 700417<br>Gilson 1140 | **Tapered Roller Bearing**<br>Fits Oregon 45-206<br>For tiller gear boxes<br>ID: .748" | | |

B

| OREGON | Replaces | Description | Product Code | |
|---|---|---|---|---|
| **Lawn Boy / Gilson** | | | | |
| **45-206** | 700418<br>1044 | **Race**<br>Fits Oregon® 45-205<br>For tiller gear boxes<br>OD: 1.7812" | | |
| **45-002** | 703809<br>703210<br>1045<br>1046 | **Bearing and Race kit**<br>For tiller gear boxes<br>OD: 1.988", ID: 1.00", width: .608" | | |
| **45-112** | | **Flanged Wheel Bearing**<br>Fits Oregon 72-500 & 72-508 wheels<br>OD: 1.125", ID: .500", width: .435" | | |
| **Little Wonder** | | | | |
| **45-130** | 124 | **Bearing**<br>OD: 1.574", ID: .669", width: .471"<br>Reference No.: 6203-2RSNR with snap ring | | |
| **McLane** | | | | |
| **45-242** | 2036 | **Bearing**<br>For edger shaft bearing<br>OD: 1.375", ID: .625", width: .43" | | |
| **MTD** | | | | |
| **45-019** | 706-16276<br>3999<br>K & S 706-18796 | **Bushing**<br>For edger shafts<br>OD: 3/4", ID: 1/2", width: 3/4", flange OD: 15/16"<br>Thickness: 1/8"<br>Use on K & S edgers and others, Velke wheel bushing | | |
| **45-242** | 741-0155<br>941-0155 | **Bearing**<br>Fits upper wheel drive case bearing on 430 & 437 tillers, shaft bearing for 586 edger, upper chain case bearing on 030 & 406 rear tine tiller, 99502H<br>OD: 1.375", ID: .625", width: .43" | | |
| **45-100** | 741-0225<br>941-0225 | **Bushing**<br>Fits 820–829 & 840–849 mowers<br>For deck-lift pivot<br>Hex OD: 7/8", hex ID: 5/8", hex width: 5/8"<br>Flange OD: 1-7/64", thickness: 1/8" | | |
| **45-095** | 741-0313<br>741-0487<br>941-0487A | **Bushing**<br>Fits steel wheel on 645, 648, 650, & 651 shredders<br>OD: 53/64", ID: 21/32", width: 1"<br>Flange OD: 1-3/64" | | |

# Bearings & Bushings

| OREGON | Replaces | Description | Product Code | |
|---|---|---|---|---|
| **MTD** | | | | |
| **45-276** | 741-0494 | **Flange Bushing**<br>Fits 31A model series snow throwers (1990–2014)<br>OD: 1.16", ID: 1.05" | | |
| **45-280** | 741-0661B<br>741-0661A<br>741-0661 | **Flange Bearing**<br>Fits 31A model series snow throwers (2000–2014)<br>OD: 1.0", ID: 0.754" | | |
| **45-281** | 741-0662 | **Flange Bearing**<br>Fits 31A model series snow throwers (1997–2014)<br>OD: 1.00", ID: 0.75", width: 0.50" | | 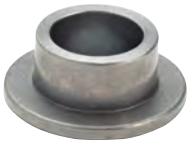 |
| **45-279** | 741-0663 | **Flange Bearing**<br>Fits 31A model series snow throwers (1997–2014)<br>ID: .50", OD: .75", width: 0.925" | | 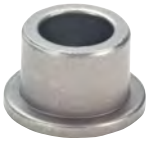 |
| **45-278** | 941-0170<br>741-0170 | **Flange Bearing**<br>Fits 31A model series snow throwers (2012–2014)<br>ID: 1.00" w/ flats | | |
| **45-130** | 941-0563 | **Bearing**<br>OD: 1.574", ID: .669", width: .471"<br>Reference No.: 6203-2RSNR with snap ring | | |
| **45-000** | 941-0141<br>Snapper 1-5474 | **Flanged Wheel Bearing**<br>Fits Oregon® 51-000<br>OD: 1-3/8", ID: 3/4" | | |
| **45-094** | 748-0169<br>948-0169 | **Bushing**<br>OD: 1", ID: 3/4", width: 1-15/16"<br>Flange OD: 1-1/8" | | |
| **45-088** | 748-0227<br>748-0227A<br>948-0227A | **Bushing**<br>Fits lower wheel drive bearing for model 020, 030, & 406 tiller models, lower chain case, & 603 edger<br>OD: 3/4", ID: 5/8", flange OD: 1-1/8" | | |

B

| OREGON | Replaces | Description | Product Code | |
|---|---|---|---|---|
| **MTD** | | | | |
| **45-833** | 941-0475<br>741-0475 | **Flanged Bushing**<br>For riders on steering & snow thrower auger and chute assembly<br>OD: 1/2", ID: 3/8", width: 3/8", flange OD: 5/8"<br>Thickness: 3/32" | | |
| **45-045** | 741-0523<br>941-0523 | **Bushing**<br>Fits pivot bar bushing for 800-series tractors<br>ID: 3/4" | | |
| **45-046** | 741-0659<br>941-0659 | **Flanged Bushing**<br>Fits pivot bar bushing for 600-series<br>OD: 15/16", ID: 5/8" | | |
| **45-112** | 941-0484<br>741-0484 | **Flanged Wheel Bearing**<br>Single seal<br>OD: 1-3/8, ID: 1/2, width: .435 | | |
| **45-047** | 741-0569<br>941-0569<br>Grasshopper 120050 | **Flanged Wheel Bearing**<br>With single seal<br>OD: 1-3/8, ID: 5/8, width: .463<br>Can use Oregon® 45-258 heavy-duty bearing | | |
| **45-075** | 941-0706 | **Flanged Bushing with Grease Zerk**<br>For front wheels on riders<br>OD: 13/16". ID: 5/8", flange OD: 1-1/16", length: 1" | | |
| **72-080** | 941-0706 | **Flanged Wheel Bushing - NEW**<br>OD: 1", ID: 5/8", Width: 1" | | |
| **45-091** | 748-0855<br>Toro 2119-127<br>Jacobsen 545549 | **Flanged Bushing**<br>OD: 3/4", ID: 5/8", width: 1"<br>Flange OD: 1-1/4" | | |
| **45-092** | 741-0293<br>941-0293<br>748-0143 | **Flanged Plastic Bushing**<br>OD: 1", ID: 25/32", flange OD: 1-1/4" | | |
| **45-082** | 741-0199<br>741-0490<br>941-0490<br>748-0151 | **Flanged Plastic Bushing**<br>OD: 1-1/4", ID: 3/4", flange OD: 1-3/8" | | |

B

# Bearings & Bushings

| OREGON | Replaces | Description | Product Code | |
|---|---|---|---|---|
| **MTD** | | | | |
| **45-113** | 731-0374<br>AF43632 | **Flanged Bushing**<br>Fits lower chain case bearing on Model 406 rear tine tiller, front tine tillers 5 & 8 HP<br>OD: 1-1/4", ID: 1", width: 1"<br>Flange OD: 1-1/2" | | |
| **45-257** | 741-0124<br>941-0124 | **Bearing**<br>Fits blade shaft bearing on edgers models 603 & 620<br>OD: 1.574", ID: .669", width: .47" | | |
| **45-037** | 741-0404<br>941-0404<br>741-0136 | **Needle Bearing**<br>For variable speed pulley, lawn tractors<br>OD: 3/4", ID: 9/16", width: 9/16" | | |
| **45-070** | 741-0312<br>941-0312 | **Flanged Plastic Bushing**<br>For front wheel bushing on large frame tractors<br>Fits 16 x 650-8 wheel assemblies<br>OD: 1-1/4", ID: 3/4", width: 1-1/8", flange OD: 1-1/2" | | |
| **45-071** | 941-0656 | **Hex Bushing**<br>OD: 7/8", ID: 5/8", length: 1/4" | | |
| **45-072** | 941-0660 | **Bushing**<br>OD: 3/4", ID: 1", length: 1" | | |
| **45-074** | 741-0990A | **Flanged Bushing with Grease Zerk**<br>For front wheels on riders<br>OD: 1", ID: 3/4", flange OD: 1-3/8", length: 1-3/8" | | |
| **45-834** | 941-04136B<br>741-04136B<br>741-04136A<br>741-04136 | **Flanged Plastic, Split-Hex Bushing**<br>For front axle of self-propelled mowers with quick wheel height adjuster<br>Hex: 3/4", ID: 1/2", opening width: 7/16"<br>Flange dia. 1", thickness: 1/8" | | |
| **45-277** | 948-0108<br>748-0108<br>748-0269 | **Flange Bearing**<br>Fits 31A model series snow throwers (1985–2013)<br>OD: 0.75", ID: 0.503" | | |
| **Murray** | | | | |
| **45-257** | 2055<br>AMF/Noma 49562 | **Bearing**<br>Fits OEM quill assemblies & Oregon® 82-493 & 82-514<br>OD: 1.574", ID: 660", width: .472"<br>Reference No.: 6203-2RS | | |

B

| OREGON | Replaces | Description | Product Code | |
|---|---|---|---|---|
| **Murray** | | | | |
| **45-022** | 56105<br>24368 | **Plastic Bushing**<br>For front wheels on riders<br>OD: 1-3/8", ID: 5/8", width: 11/16" | | |
| **45-242** | | **Bearing**<br>Fits Oregon® 82-243 spindle assembly 99502H<br>OD: 1.374", ID: .625", width: .430" | | |
| **45-243** | | **Bearing**<br>Fits Oregon 82-243 spindle assembly<br>OD: 1.574", ID: .625"<br>Reference No.: 6203-2RS-5/8 | | |
| **45-087** | 24615 | **BushIng**<br>Impregnated with graphite<br>OD: 1-1/8", ID: 5/8", width: .75" | | |
| **45-023** | 93064 | **Plastic Bushing**<br>For front wheel bushing on 18 HP lawn tractors<br>OD: 1.375", ID: .875", width: .625" | | |
| **45-043** | 91334<br>24367<br>491334 | **Bushing**<br>For front wheel bearing on tractors | | |
| **82-244** | 24532<br>91903 | **Spacer Bushing**<br>Fits Oregon 82-243 quill assembly<br>OD: .75", ID: 625", width: 1.733" | | |
| **45-250** | | **Bearing and Spacer Kit**<br>For Murray tractors and riders<br>Fits Oregon 82-243 & 82-250 spindles | | |
| **Noma/AMF** | | | | |
| **45-257** | 49562 | **Bearing**<br>Fits Oregon 82-493 & 82-514<br>For OEM quill assemblies<br>OD: 1.574", ID: 660", width: .472"<br>Reference No.: 6203-2RS | | |
| **45-098** | 40195 | **Flanged Bushing**<br>OD: 1-3/8", ID: 3/4", width: 3/4"<br>Flange OD: 1-9/16" | | |
| **45-079** | 39979 | **Flanged Bushing**<br>For front wheel<br>OD: 1-3/8", ID: 3/4", width: 5/8" | | |

B

# Bearings & Bushings

| OREGON | Replaces | Description | Product Code | |
|---|---|---|---|---|
| **Scag** | | | | |
| **45-002** | 48668<br>48005-04<br>48005-05 | **Bearing and Race Kit**<br>For bearing on new style blade spindle assemblies<br>Fits rear wheel bearing on rider models ST12B, 13K, 17KA, & 18KH | | |
| **45-257** | 48102 | **Bearing**<br>Fits transmission idler pulley bearing on ST12B, 13K, 17KA, & 18KH riders, idler bearing on SM48, SM61, & SM72 decks<br>OD: 1.574", ID: .669", width: .47" | | |
| **45-242** | 48224 | **Bearing**<br>For jackshaft bearing on belt drive walk-behind models & neutral return bearing on zero turn models<br>OD: 1.374", ID: .625", width: .43" | | |
| **45-220** | 48101-02<br>Bobcat 35008N<br>Exmark 303057<br>Exmark 303543<br>Ferris 1520828<br>Ferris 1520828S<br>Jacobsen 552184<br>John Deere JD4467<br>John Deere JD9299<br>John Deere M77534 | **Bearing – Heavy-Duty**<br>Improved quality & precision for spindles<br>For top & bottom bearing on spindle assembly<br>OD: 2.4375", ID: .987", width: .670"<br>Reference No.: 6305-2RS | | |
| **48-320** | 48100-02 | **Flanged Bushing**<br>Use with Oregon® 48-203 caster arm<br>OD: 1.25", ID: 1", width: 75", flange OD: 1.765" | | |
| **45-031** | 48193-01 | **Flanged Wheel Bearing**<br>For wheel bearing on Scag belt drive, walk-behinds<br>Use with Oregon 48-303<br>Will not fit wheels requiring 1.984" OD, check before ordering<br>OD: 2.002", ID: 1.007", width: .671" | | |
| **45-127** | 48100-01<br>Encore 363007<br>Exmark 303044<br>Snapper 7-6514 | **Flanged Bushing**<br>For caster support arm & steering shaft bushing for pivot wheel on 12, 13, & 17 HP Turf Runner<br>Use with Oregon 48-203<br>OD: 1-1/8", ID: 7/8", width: 1", flange OD: 1-1/2" | | |
| **Simplicity** | | | | |
| **45-003** | 156316 | **Flanged Bushing**<br>Fits wheels on 3100, 4200, 5200, & 6500 riders<br>OD: 1.135", ID: .75", width: .75" | | |
| **45-242** | 1665521 | **Bearing**<br>OD: 1.375", ID: .625", width: .43" | | |

B

| OREGON | Replaces | Description | Product Code | |
|---|---|---|---|---|
| **Simplicity** | | | | |
| **45-295** | 108202 | **Bearing**<br>OD: 1.781", ID: .75", width: .6075" | | |
| **45-257** | 1666292<br>1705897<br>Toro 38-7820 | **Bearing**<br>Fits auger shaft bearing on S-200, 620, & CCR2000 snow throwers<br>OD: 1.574", ID: .669", width: .47" | | |
| **Snapper** | | | | |
| **45-010** | 1-0570<br>1-0943<br>1-1807 | **Flanged Wheel Bearing**<br>Fits 5-0618 wheel assembly & Oregon® 72-728 wheel | | |
| **45-000** | 1-5474<br>26693 | **Flanged Wheel Bearing**<br>Screw machine bearing<br>Use with Oregon 51-000<br>OD: 1-3/8", ID: 3/4" | | |
| **45-030** | 303044<br>7-6514<br>Exmark 303514<br>Kees 393194 | **Bushing**<br>For caster yoke support arm<br>Fits Viking, Explorer, Turf Tracer, Turf Ranger, & Metro series<br>OD: 1.128", ID: .8821", length: 1.250", flange OD: 1.5" | | |
| **45-220** | Bobcat 35008N<br>Exmark 303057<br>Exmark 303543<br>Ferris 1520828<br>Ferris 1520828S<br>Jacobsen 552184<br>John Deere JD4467<br>John Deere JD9299<br>John Deere M77534<br>Scag 48101-02 | **Bearing – Heavy-Duty**<br>Improved quality & precision for spindles<br>For top & bottom bearing on spindle assembly<br>OD: 2.4375", ID: .987", width: .670"<br>Reference No.: 6305-2RS | | |
| **45-208** | 1-8767 | **Bearing**<br>Oregon 79-605 & 79-610 height adjusters<br>For all self-propelled models<br>OD: 1.375", ID: .5625", width: .4375" | | |
| **45-080** | | **Bushing**<br>For plastic wheel<br>OD: 5/8", ID: 1/2" | | |
| **45-107** | 5-0918 | **Bearing**<br>For rear axle, left side<br>Fits 26–33" riders<br>Lg. OD: 1.750", sm. OD: 1.6255", ID: 3/4"<br>Width: 1.7506" | | |

B

# Bearings & Bushings

| OREGON | Replaces | Description | Product Code | |
|---|---|---|---|---|
| **Snapper** | | | | |
| **45-209** | 1-2304<br>2-8014 | **Bearing**<br>For hex shaft, 21" self-propelled mowers<br>OD: 1", ID: 3/8", width: 5/16" | | |
| **45-242** | 7-7324<br>1-4514<br>204-020 (Yazoo) | **Bearing**<br>ID: .625", OD: 1.374", width: .43" | | |
| **45-227** | 7-9813<br>Country Clipper C-28971<br>Grasshopper 110082<br>Grasshopper 833210<br>Jacobsen 310427<br>Jacobsen 345050<br>John Deere M63810<br>John Deere M88251<br>Toro 25-11257 | **Bearing**<br>Fits model 6372<br>OD: 2.045", ID: .987", width: .600"<br>Reference No.: 6205-2RS | | |
| **45-081** | 1-0986 | **Bushing**<br>For king pin<br>OD: 13/16", ID: 49/64", width: 43/64" | |  |
| **45-083** | 1-3321<br>1-0743<br>1-1099<br>1-1100 | **Bushing**<br>For plastic tie rod<br>OD: 1/2", ID: 25/64", width: 25/64" | | |
| **45-295** | 1-0696<br>1-3313<br>5-4073 | **Bearing**<br>For spindle bearing on riding mowers<br>OD: 1.781", ID: .75", width: .607" | | |
| **48-211** | 7-6504 | **Bearing**<br>Fits older style single belt drive 32", 36", &<br>48" walk-behinds, & transmission shaft support bearing<br>OD: 1.575", ID: .625", width: .87" | | |
| **48-206** | 1-1048 | **Bushing**<br>For shift yoke on rear engine riders | | |
| **45-127** | 7-6514<br>Kees 363194 | **Bushing**<br>For caster yoke support<br>OD: 1.125", ID: .885", width: 1" | | |

B

| OREGON | Replaces | Description | Product Code | |
|---|---|---|---|---|
| **Toro** | | | | |
| **45-242** | 251-207<br>204-020 (Yazoo) | **Bearing**<br>OD: 1.374", ID: .625", width: .43" | | |
| **45-227** | 25-11257<br>Country Clipper C-28971<br>Grasshopper 110082<br>Grasshopper 833210<br>Jacobsen 310427<br>Jacobsen 345050<br>John Deere M63810<br>John Deere M88251<br>Snapper 7-9813 | **Bearing**<br>Fits model 6372<br>OD: 2.045", ID: .987", width: .600"<br>Reference No.: 6205-2RS | | |
| **45-002** | 46-8530 | **Bearing and Race Kit**<br>Fits 36", 44", & 52" spindles<br>OD: 1.988", ID: 1", race width: .418"<br>Brg. width: .608" | | |
| **45-000** | 251-210<br>1210<br>Wheel Horse 110513 | **Flanged Wheel bearing**<br>For rear engine riders<br>ID: .75", OD: 1.375", width: .479" | | |
| **45-257** | 38-7820 | **Bearing**<br>Fits auger shaft bearing on S-200, 620, &<br>CCR2000 snow throwers<br>OD: 1.574", ID: .669", width: .47" | | |
| **45-018** | 113514 | **Bearing**<br>Sealed one side<br>Spindle bearing for 50" & 60"side<br>discharge mowers on tractors<br>OD: 2.0472", ID: .9843", width: .5906" | | |
| **45-031** | 251-299<br>Exmark 32329 | **Flanged Wheel Bearing**<br>For commercial mowers (1986 & older)<br>Year identified by 1st digit of serial number<br>OD: 2.002", ID: 1.007", width: .671" | | |
| **45-025** | 52-2450<br>251-257 | **Bearing**<br>For all 21" commercial mowers<br>OD: 1.125", ID: .500", width: .312" | | |
| **45-266** | 110-8837 | **Caster Wheel Bearing Kit**<br>For Z Master mowers (2007–2008)<br>Includes bearing cones, bearing cups,<br>bearing spacers, & bearing seals | | |

B

# Bearings & Bushings

| OREGON | Replaces | Description | Product Code | |
|---|---|---|---|---|
| **Yazoo** | | | | |
| **45-242** | 204-020 | **Bearing**<br>OD: 1.374", ID: .625", width: .43" | | |
| **45-243** | 204-019 | **Bearing**<br>OD: 1.574", ID: .625", width: .471" | | |
| **45-295** | 204-060 | **Bearing**<br>For spindle bearing on old style 60" & 72" mowers<br>OD: 1.781", ID: .750", width: .6075" | | |


Can't find what you're looking for?
Try us online to search the latest products available.

OregonProducts.com

## Bushings by Type

| OREGON | Type | ID | OD | Width | Flange OD | Material | Product Code |
|---|---|---|---|---|---|---|---|
| 45-083 | 1 | .390 | .500 | .390 | 1.600 | Plastic | |
| 45-080 | 1 | .500 | .625 | .650 | .760 | Plastic | |
| 45-008 | 1 | .500 | .750 | .625 | 1.000 | Bronze | |
| 45-019 | 1 | .500 | .750 | .750 | .938 | Bronze | |
| 45-091 | 1 | .628 | .752 | 1.000 | 1.250 | Bronze | |
| 45-095 | 1 | .656 | .828 | 1.000 | 1.046 | Plastic | |
| 45-046 | 1 | .660 | .945 | 1.000 | 1.250 | Plastic | |
| 45-007 | 1 | .750 | 1.000 | .632 | 1.250 | Bronze | |
| 45-094 | 1 | .750 | 1.000 | 1.933 | 1.125 | Bronze | |
| 45-015 | 1 | .750 | 1.383 | .375 | 1.550 | Oilite | |
| 45-081 | 1 | .765 | .813 | .672 | 1.250 | Plastic | |
| 45-045 | 1 | .780 | 1.070 | .940 | 1.385 | Plastic | |
| 45-092 | 1 | .781 | 1.000 | .750 | 1.250 | Plastic | |
| 45-013 | 1 | .879 | 1.000 | .645 | 1.250 | Bronze | |
| 45-127 | 1 | .885 | 1.125 | 1.000 | 1.500 | Oilite | |
| 45-006 | 1 | 1.000 | 1.125 | .624 | 1.502 | Bronze | |
| 48-320 | 1 | 1.000 | 1.250 | .750 | 1.625 | Bronze | |
| 45-113 | 1 | 1.000 | 1.250 | 1.000 | 1.500 | Plastic | |
| 45-057 | 2 | .750 | 1.375 | 1.000 | 1.550 | Oilite | |
| 45-098 | 2 | .750 | 1.375 | .750 | 1.500 | Oilite | |
| 45-040 | 2 | .938 | 1.250 | .688 | 1.500 | Plastic | |
| 45-100 | 3 | .625 | .875 | .625 | 1.109 | Plastic | |
| 45-088 | 3 | .625 | 1.000 | .625 | 1.125 | Bronze | |
| 45-082 | 4 | .750 | 1.250 | .750 | 1.375 | Plastic | |
| 45-009 | 5 | .753 | 1.000 | .753 | 1.250 | Bronze | |
| 45-030 | 5 | .882 | 1.128 | 1.250 | 1.500 | Bronze | |
| 45-087 | 6 | .625 | 1.128 | .750 | 1.315 | Oilite | |
| 45-003 | 6 | .750 | 1.135 | .750 | 1.325 | Oilite | |
| 45-079 | 6 | .750 | 1.375 | .625 | 1.500 | Oilite | |
| 45-078 | 8 | .750 | 1.000 | 1.780 | n/a | Bronze | |
| 78-101 | 9 | .375 | .669 | .500 | n/a | Steel | |
| 78-100 | 9 | .500 | .669 | .500 | n/a | Steel | |
| 82-244 | 9 | .625 | .750 | 1.733 | n/a | Steel | |
| 09-802 | 9 | .625 | 1.000 | .250 | n/a | Steel | |
| 48-141 | 9 | .625 | 1.500 | .500 | n/a | Steel | |
| 09-801 | 9 | .750 | 1.250 | .250 | n/a | Steel | |
| 09-804 | 9 | .882 | 1.500 | .500 | n/a | Steel | |
| 09-808 | 9 | 1.000 | 1.750 | .250 | n/a | Steel | |
| 45-022 | 11 | .625 | 1.375 | .688 | 1.550 | Plastic | |
| 45-023 | 11 | .900 | 1.375 | .925 | 1.550 | Plastic | |
| 45-128 | 14 | .387 | .511 | .470 | .790 | Plastic | |
| 45-073 | 15 | .750 | .875 | .750 | 1.000 | Plastic | |
| 45-071 | 16 | .625 | .875 | .240 | 1.100 | Oilite | |

Type 1

Type 2

Type 3

Type 4

Type 5

Type 6

Type 9

Type 8

Type 11

Type 13

Type 14

Type 15

Type 16

B

# Belts by Size

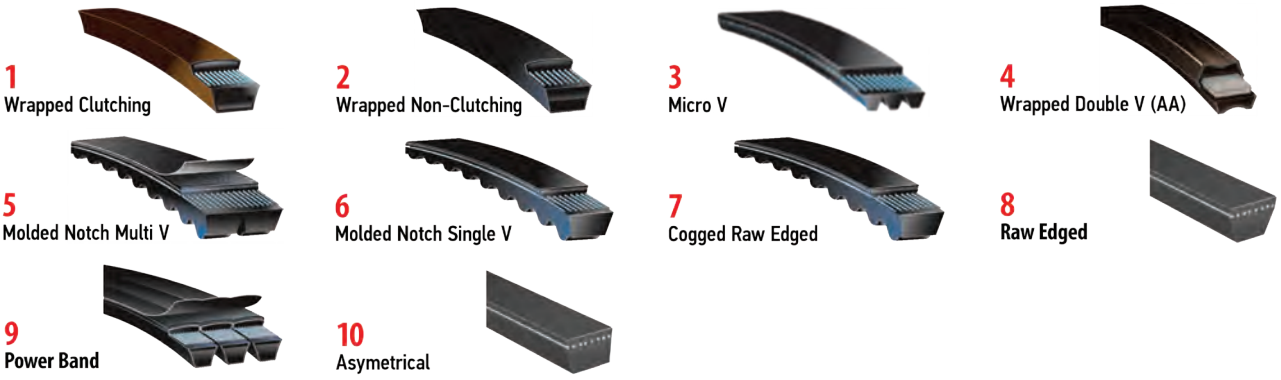


For all Oregon® belts, the outside circumference (OC) is the length listed. A belt measurer, like the Oregon 75-910, can be used to determine this dimension. For belts with an OC longer than 100" or those with non-standard backs (like the Oregon 75-068), use a tape measure wrapped around the outside of the belt to determine the length.

| OREGON | Length | Width | Type |
|---|---|---|---|
| **75-A14** | 16 | 1/2 | Poly |
| **75-A15** | 17 | 1/2 | Poly |
| **75-418** | 18 | 1/2 | Aramid |
| **75-A16** | 18 | 1/2 | Poly |
| **75-419** | 19 | 1/2 | Aramid |
| **75-A17** | 19 | 1/2 | Poly |
| **75-120** | 19-1/4 | 1/2 | 1 |
| **75-320** | 20 | 3/8 | Aramid |
| **75-123** | 20 | 1/2 | 1 |
| **75-420** | 20 | 1/2 | Aramid |
| **75-A18** | 20 | 1/2 | Poly |
| **75-059** | 20-3/8 | 6-rib | 3 |
| **75-321** | 21 | 3/8 | Aramid |
| **75-421** | 21 | 1/2 | Aramid |
| **75-A19** | 21 | 1/2 | Poly |
| **15-603** | 21-1/2 | 3/8 | |
| **75-685** | 21-3/4 | 1/2 | 1 |
| **75-322** | 22 | 3/8 | Aramid |
| **75-422** | 22 | 1/2 | Aramid |
| **75-A20** | 22 | 1/2 | Poly |
| **75-B19** | 22 | 5/8 | Poly |
| **75-686** | 22-1/4 | 1/2 | 1 |
| **75-354** | 22-1/2 | 4-rib | 3 |
| **75-323** | 23 | 3/8 | Aramid |
| **75-423** | 23 | 1/2 | Aramid |
| **75-A21** | 23 | 1/2 | Poly |
| **75-B20** | 23 | 5/8 | Poly |
| **15-845** | 23-7/16 | 7/16 | 7 |
| **75-324** | 24 | 3/8 | Aramid |
| **75-424** | 24 | 1/2 | Aramid |
| **75-A22** | 24 | 1/2 | Poly |
| **75-B21** | 24 | 5/8 | Poly |
| **75-278** | 24-1/4 | 1/2 | 1 |
| **75-938** | 24-7/16 | 1/2 | 6 |
| **15-580** | 24-1/2 | 1/2 | |
| **75-325** | 25 | 3/8 | Aramid |
| **75-508** | 25 | 3/8 | 1 |
| **75-425** | 25 | 1/2 | Aramid |
| **75-A23** | 25 | 1/2 | Poly |

| OREGON | Length | Width | Type |
|---|---|---|---|
| **75-525** | 25 | 5/8 | Aramid |
| **75-B22** | 25 | 5/8 | Poly |
| **75-353** | 25-1/2 | 3/8 | 6 |
| **15-425** | 25-5/8 | 7/16 | |
| **15-268** | 26 | 3/8 | 7 |
| **75-326** | 26 | 3/8 | Aramid |
| **15-267** | 26 | 1/2 | |
| **75-426** | 26 | 1/2 | Aramid |
| **75-A24** | 26 | 1/2 | Poly |
| **75-B23** | 26 | 5/8 | Poly |
| **15-398** | 26 | 21/32 | |
| **15-604** | 27 | 3/8 | 7 |
| **75-327** | 27 | 3/8 | Aramid |
| **75-427** | 27 | 1/2 | Aramid |
| **75-A25** | 27 | 1/2 | Poly |
| **75-527** | 27 | 5/8 | Aramid |
| **75-B24** | 27 | 5/8 | Poly |
| **75-067** | 27-1/4 | 1/4 | 2 |
| **15-577** | 27-1/4 | 3/4 | 10 |
| **15-001** | 27-5/8 | 1/2 | 2 |
| **15-221** | 27-3/4 | 1/4 | 8 |
| **75-328** | 28 | 3/8 | Aramid |
| **75-428** | 28 | 1/2 | Aramid |
| **75-A26** | 28 | 1/2 | Poly |
| **75-528** | 28 | 5/8 | Aramid |
| **75-B25** | 28 | 5/8 | Poly |
| **75-010** | 28-1/4 | 1/2 | 1 |
| **15-331** | 28-3/8 | 3/8 | |
| **15-002** | 28-3/8 | 1/2 | 6 |
| **15-844** | 28-3/8 | 3/4 | 7 |
| **15-939** | 28-15/16 | 21/32 | |
| **75-329** | 29 | 3/8 | Aramid |
| **75-429** | 29 | 1/2 | Aramid |
| **75-A27** | 29 | 1/2 | Poly |
| **75-529** | 29 | 5/8 | Aramid |
| **75-B26** | 29 | 5/8 | Poly |
| **15-333** | 29-1/8 | 3/4 | 10 |
| **75-380** | 29-3/16 | 5/8 | 2 |

| OREGON | Length | Width | Type |
|---|---|---|---|
| **75-225** | 29-1/4 | 3/8 | 8 |
| **15-784** | 29-3/8 | 7/16 | |
| **115-223** | 29-1/2 | 1/2 | 1 |
| **75-330** | 30 | 3/8 | Aramid |
| **75-980** | 30 | 3/8 | 6 |
| **75-430** | 30 | 1/2 | Aramid |
| **75-A28** | 30 | 1/2 | Poly |
| **75-530** | 30 | 5/8 | Aramid |
| **75-B27** | 30 | 5/8 | Poly |
| **75-065** | 30-1/4 | 1/2 | 1 |
| **75-101** | 30-1/4 | 1/2 | 1 |
| **75-091** | 30-5/16 | 3/8 | 1 |
| **15-290** | 30-7/16 | 21/32 | |
| **15-051** | 30-9/16 | 1/2 | 8 |
| **15-744** | 30-3/4 | 3/8 | |
| **15-590** | 31 | 3/8 | 7 |
| **75-331** | 31 | 3/8 | Aramid |
| **15-645** | 31 | 1/2 | |
| **75-431** | 31 | 1/2 | Aramid |
| **75-A29** | 31 | 1/2 | Poly |
| **75-531** | 31 | 5/8 | Aramid |
| **75-B28** | 31 | 5/8 | Poly |
| **15-335** | 31-1/8 | 3/4 | 10 |
| **75-020** | 31-1/4 | 3/8 | 1 |
| **75-092** | 31-1/4 | 1/2 | 1 |
| **75-075** | 31-5/16 | 3/8 | 2 |
| **75-713** | 31-5/16 | 3/8 | 6 |
| **75-711** | 31-5/8 | 3/8 | 6 |
| **15-693** | 31-3/4 | 3/8 | |
| **15-668** | 31-15/16 | 3/8 | |
| **75-709** | 31-15/16 | 5/8 | 8 |
| **75-087** | 32 | 3/8 | 7 |
| **115-703** | 32-1/10 | 3/8 | |
| **75-332** | 32 | 3/8 | Aramid |
| **75-432** | 32 | 1/2 | Aramid |
| **75-A30** | 32 | 1/2 | Poly |
| **75-532** | 32 | 5/8 | Aramid |
| **75-B29** | 32 | 5/8 | Poly |

| OREGON | Length | Width | Type |
|---|---|---|---|
| 15-337 | 32-1/8 | 3/4 | 10 |
| 75-517 | 32-1/4 | 7/32 | |
| 15-228 | 32-1/4 | 3/8 | |
| 75-914 | 32-1/4 | 3/8 | 1 |
| 75-080 | 32-1/4 | 1/2 | 1 |
| 15-508 | 32-5/16 | 1-1/8 | |
| 15-783 | 32-3/8 | 7/16 | |
| 175-164 | 32-1/2 | 3/8 | 1 |
| 75-164 | 32-1/2 | 3/8 | 1 |
| 75-712 | 32-1/2 | 6-rib | 3 |
| 15-211 | 32-5/8 | 5/16 | |
| 15-020 | 32-3/4 | 3/8 | 1 |
| 75-027 | 32-3/4 | 3/8 | 1 |
| 15-602 | 32-15/16 | 3/8 | |
| 15-609 | 32-15/16 | 3/8 | |
| 75-333 | 33 | 3/8 | Aramid |
| 75-727 | 33 | 3/8 | 1 |
| 75-433 | 33 | 1/2 | Aramid |
| 75-A31 | 33 | 1/2 | Poly |
| 75-533 | 33 | 5/8 | Aramid |
| 75-B30 | 33 | 5/8 | Poly |
| 15-193 | 33-1/8 | 3/8 | 8 |
| 15-014 | 33-1/4 | 3/8 | 2 |
| 15-223 | 33-1/4 | 3/8 | |
| 15-833 | 33-7/16 | 1/4 | 7 |
| 15-522 | 33-1/2 | 21/32 | |
| 75-060 | 33-1/2 | 6-rib | 3 |
| 15-800 | 33-5/8 | 3/8 | |
| 15-133 | 33-3/4 | 3/8 | 1 |
| 15-678 | 33-7/8 | 1/2 | |
| 15-477 | 34 | 5/16 | |
| 75-334 | 34 | 3/8 | Aramid |
| 75-434 | 34 | 1/2 | Aramid |
| 75-A32 | 34 | 1/2 | Poly |
| 15-100 | 34 | 5/8 | 1 |
| 75-534 | 34 | 5/8 | Aramid |
| 75-B31 | 34 | 5/8 | Poly |
| 15-649 | 34-1/16 | 1/2 | |
| 15-054 | 34-1/8 | 3/8 | 2 |
| 75-502 | 34-1/8 | 3/8 | 1 |
| 15-748 | 34-1/8 | 3/8 | 8 |
| 15-322 | 34-3/16 | 3/8 | |
| 15-780 | 34-3/16 | 3/8 | 7 |
| 75-204 | 34-1/4 | 3/8 | 1 |
| 75-996 | 34-1/4 | 3/8 | 2 |
| 15-443 | 34-1/4 | 1/2 | 7 |
| 75-192 | 34-3/8 | 3/8 | 1 |
| 15-225 | 34-7/16 | 5/16 | |
| 75-273 | 34-7/16 | 3/8 | 6 |
| 75-066 | 34-7/16 | 6-rib | 3 |
| 15-781 | 34-1/2 | 3/8 | 7 |
| 15-712 | 34-1/2 | 1/2 | 7 |
| 75-939 | 34-1/2 | 5-rib | 3 |
| 75-368 | 34-9/16 | 3/4 | 6 |
| 15-224 | 34-5/8 | 3/8 | |
| 75-724 | 34-5/8 | 3/8 | 6 |
| 75-157 | 34-3/4 | 3/8 | 1 |
| 75-272 | 34-3/4 | 3/8 | 6 |
| 75-084 | 34-3/4 | 1/2 | 6 |
| 15-184 | 34-7/8 | 1/2 | |
| 15-339 | 34-7/8 | 3/4 | 10 |

| OREGON | Length | Width | Type |
|---|---|---|---|
| 75-335 | 35 | 3/8 | Aramid |
| 75-501 | 35 | 3/8 | 1 |
| 15-430 | 35 | 7/16 | |
| 115-222 | 35 | 1/2 | 6 |
| 75-148 | 35 | 1/2 | 1 |
| 75-435 | 35 | 1/2 | Aramid |
| 75-A33 | 35 | 1/2 | Poly |
| 75-535 | 35 | 5/8 | Aramid |
| 75-B32 | 35 | 5/8 | Poly |
| 15-648 | 35-1/16 | 3/8 | |
| 75-918 | 35-1/8 | 3/8 | 8 |
| 175-012 | 35-1/8 | 5/8 | 1 |
| 75-009 | 35-1/8 | 5/8 | 1 |
| 75-012 | 35-1/8 | 5/8 | 1 |
| 75-289 | 35-3/16 | 6-rib | 3 |
| 75-158 | 35-1/4 | 3/8 | 6 |
| 75-684 | 35-1/4 | 3/8 | 1 |
| 15-646 | 35-1/4 | 1/2 | |
| 75-240 | 35-1/4 | 5/8 | 2 |
| 75-907 | 35-3/8 | 1/2 | 1 |
| 15-643 | 35-7/16 | 1/4 | |
| 75-365 | 35-1/2 | 3/8 | 6 |
| 15-429 | 35-5/8 | 7/16 | |
| 15-716 | 35-3/4 | 3/8 | |
| 75-098 | 35-3/4 | 3/8 | 1 |
| 15-053 | 35-7/8 | 3/8 | 2 |
| 15-195 | 35-7/8 | 3/8 | |
| 15-842 | 35-7/8 | 3/8 | 7 |
| 75-509 | 36 | 3/8 | |
| 15-052 | 36 | 3/8 | 1 |
| 75-336 | 36 | 3/8 | Aramid |
| 15-940 | 36 | 1/2 | 7 |
| 75-436 | 36 | 1/2 | Aramid |
| 75-906 | 36 | 1/2 | 1 |
| 75-A34 | 36 | 1/2 | Poly |
| 75-536 | 36 | 5/8 | Aramid |
| 75-B33 | 36 | 5/8 | Poly |
| 15-756 | 36-3/16 | 3/8 | |
| 75-249 | 36-1/4 | 3/8 | 1 |
| 75-125 | 36-1/4 | 1/2 | 1 |
| 75-231 | 36-5/16 | 5/8 | 2 |
| 15-661 | 36-7/16 | 3/8 | |
| 15-782 | 36-7/16 | 3/8 | |
| 75-144 | 36-1/2 | 1/2 | 6 |
| 75-675 | 36-1/2 | 5/8 | 1 |
| 75-122 | 36-5/8 | 1/4 | 2 |
| 15-416 | 36-5/8 | 1/2 | |
| 75-096 | 36-3/4 | 1/2 | 1 |
| 75-337 | 37 | 3/8 | Aramid |
| 75-437 | 37 | 1/2 | Aramid |
| 75-A35 | 37 | 1/2 | Poly |
| 15-786 | 37 | 9/16 | |
| 75-537 | 37 | 5/8 | Aramid |
| 75-B34 | 37 | 5/8 | Poly |
| 15-230 | 37-1/8 | 9/16 | |
| 15-262 | 37-1/8 | 3/4 | |
| 15-931 | 37-1/4 | 1/2 | 7 |
| 75-908 | 37-3/8 | 1/2 | 1 |
| 15-203 | 37-7/16 | 1/2 | 7 |
| 15-426 | 37-1/2 | 1/2 | |
| 15-266 | 37-1/2 | 1-3/16 | |

| OREGON | Length | Width | Type |
|---|---|---|---|
| 15-516 | 37-5/8 | 3/8 | |
| 115-208 | 37-5/8 | 1/2 | |
| 15-218 | 37-5/8 | 1/2 | |
| 15-647 | 37-13/16 | 1/2 | |
| 15-321 | 37-13/16 | 21/32 | |
| 75-983 | 37-15/16 | 1/2 | 1 |
| 15-843 | 37-15/16 | 1-3/16 | |
| 75-338 | 38 | 3/8 | Aramid |
| 15-688 | 38 | 1/2 | |
| 15-936 | 38 | 1/2 | |
| 75-438 | 38 | 1/2 | Aramid |
| 75-A36 | 38 | 1/2 | Poly |
| 115-222 | 38 | 5/8 | 8 |
| 75-538 | 38 | 5/8 | Aramid |
| 75-B35 | 38 | 5/8 | Poly |
| 15-619 | 38-1/8 | 3/8 | 8 |
| 75-911 | 38-1/4 | 3/8 | 2 |
| 115-220 | 38-1/4 | 5/8 | 8 |
| 15-717 | 38-5/16 | 3/8 | |
| 115-209 | 38-3/8 | 1/2 | |
| 75-909 | 38-3/8 | 1/2 | 1 |
| 15-427 | 38-1/2 | 1/2 | 1 |
| 15-194 | 38-5/8 | 1/2 | 8 |
| 15-201 | 38-13/16 | 1/2 | |
| 15-438 | 38-15/16 | 5/8 | |
| 75-339 | 39 | 3/8 | Aramid |
| 75-439 | 39 | 1/2 | Aramid |
| 75-A37 | 39 | 1/2 | Poly |
| 75-539 | 39 | 5/8 | Aramid |
| 75-B36 | 39 | 5/8 | Poly |
| 15-594 | 39-3/16 | 1/2 | |
| 15-718 | 39-1/4 | 3/8 | |
| 75-956 | 39-1/4 | 1/2 | 1 |
| 115-221 | 39-1/4 | 5/8 | 8 |
| 75-976 | 39-9/16 | 3/8 | 1 |
| 75-236 | 39-5/8 | 1/2 | 1 |
| 15-785 | 39-5/8 | 9/16 | |
| 15-662 | 39-13/16 | 3/8 | 7 |
| 75-340 | 40 | 3/8 | Aramid |
| 15-187 | 40 | 1/2 | |
| 75-440 | 40 | 1/2 | Aramid |
| 75-A38 | 40 | 1/2 | Poly |
| 15-292 | 40 | 5/8 | 7 |
| 75-540 | 40 | 5/8 | Aramid |
| 75-B37 | 40 | 5/8 | Poly |
| 75-043 | 40-1/4 | 1/2 | 1 |
| 75-117 | 40-1/4 | 1/2 | 1 |
| 15-281 | 40-3/8 | 21/32 | |
| 15-567 | 40-1/2 | 1/2 | |
| 75-038 | 40-1/2 | 1/2 | 1 |
| 15-419 | 40-9/16 | 5/8 | |
| 15-431 | 40-3/4 | 1-3/16 | |
| 75-341 | 41 | 3/8 | Aramid |
| 15-449 | 41 | 1/2 | |
| 15-519 | 41 | 1/2 | |
| 15-719 | 41 | 1/2 | 2 |
| 75-441 | 41 | 1/2 | Aramid |
| 75-A39 | 41 | 1/2 | Poly |
| 75-541 | 41 | 5/8 | Aramid |
| 75-B38 | 41 | 5/8 | Poly |
| 15-924 | 41 | 21/32 | |

B

# Belts by Size

| OREGON | Length | Width | Type |
|---|---|---|---|
| **175-993** | 41-3/16 | 5/8 | 1 |
| **75-993** | 41-3/16 | 5/8 | 1 |
| **15-366** | 41-1/4 | 21/32 | |
| **115-212** | 41-1/4 | 1-3/16 | 9 |
| **75-890** | 41-3/8 | 1/2 | 1 |
| **15-663** | 41-3/8 | 1-3/16 | |
| **15-677** | 41-1/2 | 1/2 | |
| **15-432** | 41-13/16 | 1-3/16 | |
| **15-836** | 41-7/8 | 3/8 | 7 |
| **75-342** | 42 | 3/8 | Aramid |
| **75-442** | 42 | 1/2 | Aramid |
| **75-A40** | 42 | 1/2 | Poly |
| **75-542** | 42 | 5/8 | Aramid |
| **75-B39** | 42 | 5/8 | Poly |
| **15-226** | 42-5/16 | 3/8 | |
| **15-803** | 42-3/8 | 1-3/16 | |
| **15-684** | 42-9/16 | 1/2 | 8 |
| **75-343** | 43 | 3/8 | Aramid |
| **15-374** | 43 | 1/2 | 2 |
| **75-443** | 43 | 1/2 | Aramid |
| **75-A41** | 43 | 1/2 | Poly |
| **75-543** | 43 | 5/8 | Aramid |
| **75-B40** | 43 | 5/8 | Poly |
| **15-289** | 43-1/8 | 1/2 | |
| **75-215** | 43-1/4 | 5/8 | 6 |
| **15-511** | 43-5/16 | 1/2 | |
| **75-679** | 43-7/8 | 1/2 | 1 |
| **15-638** | 44 | 3/8 | |
| **75-344** | 44 | 3/8 | Aramid |
| **75-444** | 44 | 1/2 | Aramid |
| **75-A42** | 44 | 1/2 | Poly |
| **15-046** | 44 | 5/8 | 6 |
| **75-544** | 44 | 5/8 | Aramid |
| **75-B41** | 44 | 5/8 | Poly |
| **75-281** | 44-3/16 | 5/8 | 1 |
| **75-221** | 44-5/16 | 5/8 | 6 |
| **15-282** | 44-5/16 | 21/32 | 8 |
| **15-900** | 44-3/4 | 9/16 | |
| **15-428** | 44-15/16 | 1-3/16 | |
| **75-345** | 45 | 3/8 | Aramid |
| **75-445** | 45 | 1/2 | Aramid |
| **75-A43** | 45 | 1/2 | Poly |
| **75-545** | 45 | 5/8 | Aramid |
| **75-B42** | 45 | 5/8 | Poly |
| **75-720** | 45-1/8 | 1-5/32 | 5 |
| **75-090** | 45-1/4 | 1/2 | 1 |
| **75-269** | 45-1/2 | 1-1/8 | 5 |
| **15-561** | 45-9/16 | 3/8 | |
| **15-270** | 45-3/4 | 1/2 | |
| **15-578** | 45-3/4 | 7/8 | |
| **15-802** | 45-7/8 | 1-3/16 | |
| **75-346** | 46 | 3/8 | Aramid |
| **75-446** | 46 | 1/2 | Aramid |
| **75-A44** | 46 | 1/2 | Poly |
| **75-546** | 46 | 5/8 | Aramid |
| **75-B43** | 46 | 5/8 | Poly |
| **15-929** | 46-1/16 | 21/32 | |
| **15-248** | 46-1/8 | 1/2 | 8 |
| **75-367** | 46-1/4 | 1/2 | 1 |
| **75-674** | 46-1/4 | 5/8 | 1 |
| **15-559** | 46-5/16 | 3/8 | |

| OREGON | Length | Width | Type |
|---|---|---|---|
| **15-296** | 46-1/2 | 21/32 | 8 |
| **15-354** | 46-5/8 | 1/2 | |
| **15-220** | 46-7/8 | 1/2 | |
| **15-572** | 47 | 1/2 | 1 |
| **15-813** | 47 | 1/2 | 2 |
| **75-447** | 47 | 1/2 | Aramid |
| **75-A45** | 47 | 1/2 | Poly |
| **75-547** | 47 | 5/8 | Aramid |
| **75-B44** | 47 | 5/8 | Poly |
| **15-280** | 47-1/16 | 1/2 | 8 |
| **75-094** | 47-5/16 | 1/2 | 2 |
| **15-141** | 47-3/8 | 1/2 | 1 |
| **15-399** | 47-5/8 | 9/16 | |
| **15-801** | 47-7/8 | 1/2 | 1 |
| **75-118** | 47-7/8 | 7/8 | 1 |
| **75-348** | 48 | 3/8 | Aramid |
| **75-448** | 48 | 1/2 | Aramid |
| **75-A46** | 48 | 1/2 | Poly |
| **75-548** | 48 | 5/8 | Aramid |
| **75-B45** | 48 | 5/8 | Poly |
| **75-349** | 49 | 3/8 | Aramid |
| **15-103** | 49 | 1/2 | 8 |
| **75-449** | 49 | 1/2 | Aramid |
| **75-A47** | 49 | 1/2 | Poly |
| **75-549** | 49 | 5/8 | Aramid |
| **75-B46** | 49 | 5/8 | Poly |
| **15-791** | 49 | 1-3/16 | |
| **15-908** | 49-1/16 | 1/2 | |
| **15-955** | 49-1/16 | 1/2 | |
| **15-404** | 49-1/16 | 21/32 | |
| **175-119** | 49-1/8 | 5/8 | 1 |
| **75-119** | 49-1/8 | 5/8 | 1 |
| **15-144** | 49-3/8 | 5/8 | 6 |
| **75-177** | 49-5/8 | 1-1/8 | 5 |
| **75-350** | 50 | 3/8 | Aramid |
| **15-208** | 50 | 1/2 | 1 |
| **15-947** | 50 | 1/2 | |
| **75-450** | 50 | 1/2 | Aramid |
| **75-A48** | 50 | 1/2 | Poly |
| **75-550** | 50 | 5/8 | Aramid |
| **75-B47** | 50 | 5/8 | Poly |
| **75-642** | 50-1/4 | 5/8 | 6 |
| **15-181** | 50-1/4 | 21/32 | |
| **15-682** | 50-3/8 | 1/2 | |
| **75-223** | 50-3/8 | 1/2 | 1 |
| **15-568** | 50-1/2 | 1-3/16 | |
| **15-165** | 50-9/16 | 5/8 | |
| **15-616** | 51 | 1/2 | 2 |
| **15-807** | 51 | 1/2 | 8 |
| **75-451** | 51 | 1/2 | Aramid |
| **75-A49** | 51 | 1/2 | Poly |
| **75-551** | 51 | 5/8 | Aramid |
| **75-B48** | 51 | 5/8 | Poly |
| **75-708** | 51-1/8 | 5/8 | 6 |
| **75-205** | 51-1/8 | 1-1/4 (2V) | 5 |
| **75-274** | 51-1/4 | 1/2 | 1 |
| **75-955** | 51-1/4 | 1/2 | 8 |
| **75-133** | 51-5/16 | 1-1/18 | 5 |
| **75-917** | 51-3/8 | 1/2 | 1 |
| **15-904** | 51-7/16 | 1-3/16 | |
| **15-261** | 51-1/2 | 1-3/16 | |

| OREGON | Length | Width | Type |
|---|---|---|---|
| **75-219** | 51-3/4 | 1-1/8 | 5 |
| **15-260** | 51-13/16 | 21/32 | |
| **15-450** | 51-15/16 | 5/8 | 7 |
| **15-372** | 52 | 1/2 | 2 |
| **15-375** | 52 | 1/2 | 2 |
| **75-452** | 52 | 1/2 | Aramid |
| **75-A50** | 52 | 1/2 | Poly |
| **75-552** | 52 | 5/8 | Aramid |
| **75-B49** | 52 | 5/8 | Poly |
| **15-409** | 52-1/16 | 5/8 | |
| **75-227** | 52-1/16 | 5/8 | 2 |
| **15-952** | 52-1/16 | 21/32 | |
| **15-933** | 52-1/8 | 21/32 | 7 |
| **15-458** | 52-1/4 | 21/32 | |
| **75-260** | 52-1/4 | 1-1/8 | 5 |
| **75-889** | 52-5/16 | 1/2 | 1 |
| **15-598** | 52-3/8 | 1/2 | 1 |
| **75-667** | 52-7/16 | 1/2 | 6 |
| **15-571** | 52-3/4 | 1-3/16 | |
| **15-771** | 52-13/16 | 1/2 | |
| **15-151** | 52-13/16 | 5/8 | 7 |
| **115-218** | 53 | 1/2 | |
| **15-114** | 53 | 1/2 | 6 |
| **15-222** | 53 | 1/2 | 7 |
| **15-363** | 53 | 1/2 | 1 |
| **15-685** | 53 | 1/2 | |
| **75-453** | 53 | 1/2 | Aramid |
| **75-A51** | 53 | 1/2 | Poly |
| **75-553** | 53 | 5/8 | Aramid |
| **75-B50** | 53 | 5/8 | Poly |
| **15-872** | 53 | 21/32 | |
| **75-210** | 53-1/8 | 1/2 | 2 |
| **75-057** | 53-1/4 | 1/2 | 1 |
| **75-235** | 53-1/4 | 1/2 | 1 |
| **15-749** | 53-3/8 | 1/2 | |
| **75-154** | 53-3/8 | 5/8 | 2 |
| **175-002** | 53-3/8 | 45/64 | 1 |
| **75-002** | 53-3/8 | 45/64 | 1 |
| **75-951** | 53-7/16 | 5/8 | 6 |
| **75-222** | 53-5/8 | 5/8 | 1 |
| **75-454** | 54 | 1/2 | Aramid |
| **75-A52** | 54 | 1/2 | Poly |
| **75-554** | 54 | 5/8 | Aramid |
| **75-B51** | 54 | 5/8 | Poly |
| **15-271** | 54 | 21/32 | 8 |
| **15-954** | 54-1/16 | 21/32 | |
| **15-437** | 54-5/16 | 21/32 | |
| **15-444** | 54-3/8 | 9/16 | |
| **15-934** | 54-7/16 | 9/16 | |
| **15-742** | 54-1/2 | 1-1/4 | |
| **15-040** | 54-9/16 | 1/2 | 2 |
| **15-494** | 54-9/16 | 1/2 | |
| **15-395** | 54-5/8 | 21/32 | |
| **75-024** | 54-5/8 | 7/8 | 2 |
| **75-095** | 54-5/8 | 1-1/8 | 5 |
| **75-455** | 55 | 1/2 | Aramid |
| **75-A53** | 55 | 1/2 | Poly |
| **75-555** | 55 | 5/8 | Aramid |
| **75-B52** | 55 | 5/8 | Poly |
| **75-112** | 55-1/8 | 1/2 | 1 |

| OREGON | Length | Width | Type |
|---|---|---|---|
| 75-952 | 55-1/8 | 5/8 | 6 |
| 15-454 | 55-3/8 | 21/32 | 8 |
| 15-411 | 55-9/16 | 21/32 | |
| 15-259 | 55-3/4 | 1/2 | |
| 15-751 | 55-13/16 | 21/32 | |
| 15-472 | 56 | 1/2 | 1 |
| 75-456 | 56 | 1/2 | Aramid |
| 75-A54 | 56 | 1/2 | Poly |
| 75-556 | 56 | 5/8 | Aramid |
| 75-B53 | 56 | 5/8 | Poly |
| 75-048 | 56-1/8 | 5/8 | 2 |
| 75-008 | 56-1/4 | 1/2 | 1 |
| 15-031 | 56-1/4 | 5/8 | 6 |
| 75-128 | 56-5/16 | 5/8 | 1 |
| 15-570 | 56-5/16 | 21/32 | |
| 75-798 | 56-3/8 | 1/2 | 2 |
| 75-212 | 56-5/8 | 1-1/8 | 5 |
| 15-487 | 56-3/4 | 1-1/4 | |
| 15-275 | 56-13/16 | 21/32 | 8 |
| 15-291 | 56-15/16 | 21/32 | |
| 75-457 | 57 | 1/2 | Aramid |
| 75-A55 | 57 | 1/2 | Poly |
| 15-101 | 57 | 5/8 | 8 |
| 75-557 | 57 | 5/8 | Aramid |
| 75-B54 | 57 | 5/8 | Poly |
| 15-376 | 57-1/8 | 1/2 | 2 |
| 15-601 | 57-1/8 | 1/2 | |
| 75-052 | 57-1/4 | 1/2 | 1 |
| 75-234 | 57-1/4 | 5-rib | 3 |
| 15-272 | 57-5/16 | 21/32 | 1 |
| 75-458 | 58 | 1/2 | Aramid |
| 75-A56 | 58 | 1/2 | Poly |
| 75-558 | 58 | 5/8 | Aramid |
| 75-B55 | 58 | 5/8 | Poly |
| 75-886 | 58-1/8 | 1/2 | 1 |
| 15-294 | 58-1/8 | 21/32 | |
| 15-111 | 58-1/4 | 1/2 | 1 |
| 75-999 | 58-1/4 | 1/2 | 2 |
| 15-424 | 58-1/4 | 3/4 | |
| 75-378 | 58-3/8 | 1/2 | 2 |
| 15-200 | 58-7/8 | 1/2 | |
| 15-595 | 58-7/8 | 9/16 | |
| 75-459 | 59 | 1/2 | Aramid |
| 75-A57 | 59 | 1/2 | Poly |
| 75-559 | 59 | 5/8 | Aramid |
| 75-B56 | 59 | 5/8 | Poly |
| 75-715 | 59-3/8 | 1/2 | 1 |
| 15-499 | 60 | 1/2 | |
| 75-518 | 60 | 1/2 | 1 |
| 75-460 | 60 | 1/2 | Aramid |
| 75-A58 | 60 | 1/2 | Poly |
| 115-206 | 60 | 5/8 | |
| 75-560 | 60 | 5/8 | Aramid |
| 75-B57 | 60 | 5/8 | Poly |
| 15-485 | 60-1/16 | 9/16 | |
| 75-974 | 60-1/4 | 1/2 | 1 |
| 75-159 | 60-1/4 | 5/8 | 1 |
| 15-579 | 60-1/4 | 7/8 | |
| 175-676 | 60-3/8 | 1/2 | 1 |
| 75-655 | 60-3/8 | 1/2 | 1 |
| 15-123 | 60-3/4 | 5/8 | 8 |
| 15-123 | 60-3/4 | 5/8 | 8 |

| OREGON | Length | Width | Type |
|---|---|---|---|
| 75-461 | 61 | 1/2 | Aramid |
| 75-A59 | 61 | 1/2 | Poly |
| 75-561 | 61 | 5/8 | Aramid |
| 75-B58 | 61 | 5/8 | Poly |
| 75-658 | 61-1/4 | 1/2 | 1 |
| 15-948 | 61-5/16 | 21/32 | 1 |
| 75-268 | 61-3/8 | 1/2 | 1 |
| 75-632 | 61-15/16 | 1/2 | 1 |
| 15-452 | 62 | 1/2 | 8 |
| 15-905 | 62 | 1/2 | |
| 75-462 | 62 | 1/2 | Aramid |
| 75-A60 | 62 | 1/2 | Poly |
| 75-562 | 62 | 5/8 | Aramid |
| 75-B59 | 62 | 5/8 | Poly |
| 15-794 | 62-1/8 | 1/2 | |
| 75-131 | 62-1/8 | 5/8 | 2 |
| 75-040 | 62-1/4 | 1/2 | 2 |
| 15-928 | 62-1/4 | 21/32 | 7 |
| 15-536 | 62-5/16 | 21/32 | 2 |
| 75-659 | 62-3/8 | 1/2 | 2 |
| 75-663 | 62-3/8 | 1/2 | 1 |
| 15-451 | 62-7/16 | 21/32 | 7 |
| 15-247 | 62-7/8 | 1/2 | 8 |
| 15-657 | 62-7/8 | 1/2 | |
| 75-818 | 62-15/16 | 5/8 | 2 |
| 75-463 | 63 | 1/2 | Aramid |
| 75-A61 | 63 | 1/2 | Poly |
| 15-274 | 63 | 5/8 | |
| 75-563 | 63 | 5/8 | Aramid |
| 75-B60 | 63 | 5/8 | Poly |
| 75-047 | 63-1/8 | 5/8 | 1 |
| 75-972 | 63-1/4 | 1/2 | 1 |
| 15-032 | 63-1/4 | 5/8 | 6 |
| 15-359 | 63-3/8 | 1/2 | |
| 15-279 | 63-3/8 | 5/8 | |
| 15-316 | 64 | 1/2 | 2 |
| 75-464 | 64 | 1/2 | Aramid |
| 75-A62 | 64 | 1/2 | Poly |
| 75-564 | 64 | 5/8 | Aramid |
| 75-B61 | 64 | 5/8 | Poly |
| 75-035 | 64-1/4 | 5/8 | 1 |
| 15-056 | 64-5/16 | 5/8 | 1 |
| 15-935 | 64-5/8 | 9/16 | |
| 15-277 | 64-7/8 | 5/8 | |
| 15-464 | 65 | 1/2 | |
| 15-517 | 65 | 1/2 | |
| 75-465 | 65 | 1/2 | Aramid |
| 75-A63 | 65 | 1/2 | Poly |
| 75-565 | 65 | 5/8 | Aramid |
| 75-B62 | 65 | 5/8 | Poly |
| 15-445 | 65 | 21/32 | 7 |
| 175-300 | 65-1/8 | 5/8 | 6 |
| 75-300 | 65-1/8 | 5/8 | 6 |
| 75-637 | 65-3/16 | 5/8 | 6 |
| 15-921 | 65-3/16 | 21/32 | 7 |
| 75-086 | 65-1/4 | 1/2 | 1 |
| 75-954 | 65-1/4 | 1/2 | 1 |
| 15-483 | 65-1/4 | 9/16 | |
| 75-277 | 65-3/8 | 1/2 | 1 |
| 75-641 | 65-7/8 | 5/8 | 6 |
| 75-466 | 66 | 1/2 | Aramid |
| 75-A64 | 66 | 1/2 | Poly |

| OREGON | Length | Width | Type |
|---|---|---|---|
| 75-566 | 66 | 5/8 | Aramid |
| 75-B63 | 66 | 5/8 | Poly |
| 175-248 | 66-1/4 | 1/2 | 1 |
| 75-248 | 66-1/4 | 1/2 | 1 |
| 15-120 | 66-3/8 | 1/2 | 1 |
| 15-244 | 66-3/8 | 1/2 | |
| 15-131 | 66-9/16 | 1/2 | 8 |
| 75-467 | 67 | 1/2 | Aramid |
| 75-A65 | 67 | 1/2 | Poly |
| 75-004 | 67 | 5/8 | 2 |
| 75-567 | 67 | 5/8 | Aramid |
| 75-B64 | 67 | 5/8 | Poly |
| 15-501 | 67-1/16 | 21/32 | 8 |
| 175-677 | 67-1/4 | 1/2 | 1 |
| 75-023 | 67-1/4 | 1/2 | 1 |
| 75-656 | 67-1/4 | 1/2 | 1 |
| 75-677 | 67-1/4 | 1/2 | 1 |
| 75-264 | 67-1/4 | 5/8 | 1 |
| 15-169 | 67-3/4 | 1/2 | |
| 15-160 | 67-3/4 | 5/8 | 7 |
| 15-179 | 67-3/4 | 21/32 | |
| 75-468 | 68 | 1/2 | Aramid |
| 75-A66 | 68 | 1/2 | Poly |
| 75-568 | 68 | 5/8 | Aramid |
| 75-B65 | 68 | 5/8 | Poly |
| 15-765 | 68 | 21/32 | |
| 175-025 | 68-1/4 | 5/8 | 1 |
| 75-025 | 68-1/4 | 5/8 | 1 |
| 75-130 | 68-1/4 | 5/8 | 2 |
| 75-671 | 68-5/8 | 1/2 | 1 |
| 15-104 | 69 | 1/2 | 8 |
| 15-715 | 69 | 1/2 | 1 |
| 75-469 | 69 | 1/2 | Aramid |
| 75-A67 | 69 | 1/2 | Poly |
| 75-569 | 69 | 5/8 | Aramid |
| 75-B66 | 69 | 5/8 | Poly |
| 15-190 | 69-1/16 | 21/32 | 8 |
| 15-361 | 69-1/8 | 1/2 | |
| 175-673 | 69-3/16 | 5/8 | 2 |
| 75-673 | 69-3/16 | 5/8 | 2 |
| 15-041 | 69-1/4 | 1/2 | 2 |
| 175-029 | 69-1/4 | 5/8 | 1 |
| 75-029 | 69-1/4 | 5/8 | 1 |
| 75-145 | 69-5/16 | 5/8 | 1 |
| 15-313 | 69-3/8 | 1/2 | 2 |
| 75-470 | 70 | 1/2 | Aramid |
| 75-A68 | 70 | 1/2 | Poly |
| 75-570 | 70 | 5/8 | Aramid |
| 75-B67 | 70 | 5/8 | Poly |
| 75-218 | 70-1/8 | 1/2 | 1 |
| 75-275 | 70-1/8 | 5/8 | 2 |
| 15-299 | 70-1/8 | 21/32 | |
| 15-257 | 70-5/16 | 21/32 | 2 |
| 15-737 | 70-13/16 | 21/32 | |
| 15-320 | 70-15/16 | 1/2 | 8 |
| 15-283 | 70-15/16 | 21/32 | |
| 75-471 | 71 | 1/2 | Aramid |
| 75-A69 | 71 | 1/2 | Poly |
| 75-571 | 71 | 5/8 | Aramid |
| 75-B68 | 71 | 5/8 | Poly |

# Belts by Size

| OREGON | Length | Width | Type |
|---|---|---|---|
| **75-703** | 71-1/4 | 1/2 | 1 |
| **75-168** | 71-1/4 | 5/8 | 1 |
| **15-735** | 71-5/16 | 1/2 | 1 |
| **15-804** | 71-5/16 | 21/32 | 1 |
| **15-861** | 71-5/16 | 21/32 | |
| **175-068** | 71-7/16 | 1/2 | 4 |
| **75-068** | 71-7/16 | 1/2 | 4 |
| **15-799** | 71-13/16 | 21/32 | 2 |
| **75-472** | 72 | 1/2 | Aramid |
| **75-A70** | 72 | 1/2 | Poly |
| **75-572** | 72 | 5/8 | Aramid |
| **75-B69** | 72 | 5/8 | Poly |
| **15-388** | 72-1/2 | 21/32 | 1 |
| **15-902** | 72-11/16 | 1/2 | |
| **15-118** | 73 | 1/2 | 1 |
| **75-473** | 73 | 1/2 | Aramid |
| **75-A71** | 73 | 1/2 | Poly |
| **75-573** | 73 | 5/8 | Aramid |
| **75-B70** | 73 | 5/8 | Poly |
| **15-210** | 73-7/8 | 1/2 | 8 |
| **15-462** | 73-7/8 | 1/2 | |
| **75-474** | 74 | 1/2 | Aramid |
| **75-A72** | 74 | 1/2 | Poly |
| **75-574** | 74 | 5/8 | Aramid |
| **75-948** | 74 | 5/8 | 6 |
| **75-B71** | 74 | 5/8 | Poly |
| **15-650** | 74-1/16 | 21/32 | |
| **15-764** | 74-1/16 | 21/32 | |
| **175-073** | 74-1/8 | 1/2 | 4 |
| **75-018** | 74-1/8 | 1/2 | 2 |
| **75-073** | 74-1/8 | 1/2 | 4 |
| **175-028** | 74-1/4 | 5/8 | 1 |
| **75-028** | 74-1/4 | 5/8 | 1 |
| **15-766** | 74-9/16 | 1/2 | |
| **75-475** | 75 | 1/2 | Aramid |
| **75-A73** | 75 | 1/2 | Poly |
| **75-575** | 75 | 5/8 | Aramid |
| **75-B72** | 75 | 5/8 | Poly |
| **15-773** | 72-51/16 | 1/2 | 2 |
| **15-790** | 75-3/16 | 21/32 | |
| **75-143** | 75-5/16 | 5/8 | 1 |
| **15-258** | 75-5/16 | 21/32 | 2 |
| **15-767** | 75-5/16 | 21/32 | 1 |
| **115-146** | 75-1/2 | 1/2 | 6 |
| **15-157** | 75-7/8 | 5/8 | 7 |
| **75-476** | 76 | 1/2 | Aramid |
| **75-A74** | 76 | 1/2 | Poly |
| **75-576** | 76 | 5/8 | Aramid |
| **75-B73** | 76 | 5/8 | Poly |
| **15-460** | 76-1/16 | 1/2 | 8 |
| **75-160** | 76-1/8 | 1/2 | 2 |
| **15-255** | 76-5/16 | 21/32 | 1 |
| **75-001** | 76-3/4 | 1/2 | 1 |
| **75-477** | 77 | 1/2 | Aramid |
| **75-A75** | 77 | 1/2 | Poly |
| **15-136** | 77 | 5/8 | 6 |
| **75-577** | 77 | 5/8 | Aramid |
| **75-B74** | 77 | 5/8 | Poly |
| **15-457** | 77 | 21/32 | |
| **15-815** | 77-1/16 | 1/2 | |
| **75-136** | 77-3/16 | 5/8 | 2 |

| OREGON | Length | Width | Type |
|---|---|---|---|
| **15-302** | 77-7/16 | 21/32 | |
| **75-600** | 77-7/8 | 1/2 | 1 |
| **15-625** | 78 | 1/2 | 1 |
| **75-478** | 78 | 1/2 | Aramid |
| **75-A76** | 78 | 1/2 | Poly |
| **75-578** | 78 | 5/8 | Aramid |
| **75-B75** | 78 | 5/8 | Poly |
| **175-824** | 78-1/8 | 1/2 | 2 |
| **75-372** | 78-1/8 | 1/2 | 1 |
| **75-824** | 78-1/8 | 1/2 | 2 |
| **15-139** | 78-3/16 | 5/8 | 1 |
| **15-386** | 78-3/16 | 21/32 | 2 |
| **15-055** | 78-5/16 | 5/8 | 1 |
| **75-097** | 78-3/8 | 1/2 | 1 |
| **15-729** | 78-1/2 | 1/2 | 2 |
| **75-107** | 79 | 1/2 | 1 |
| **75-479** | 79 | 1/2 | Aramid |
| **75-A77** | 79 | 1/2 | Poly |
| **75-579** | 79 | 5/8 | Aramid |
| **75-B76** | 79 | 5/8 | Poly |
| **15-839** | 79-1/16 | 21/32 | |
| **15-357** | 79-1/8 | 1/2 | |
| **75-137** | 79-3/16 | 5/8 | 2 |
| **75-360** | 79-1/4 | 1/2 | 1 |
| **175-021** | 79-5/16 | 1/2 | 1 |
| **75-021** | 79-5/16 | 1/2 | 1 |
| **15-613** | 79-3/8 | 1/2 | 1 |
| **15-642** | 79-3/8 | 1/2 | 1 |
| **75-823** | 79-3/8 | 1/2 | 2 |
| **15-695** | 79-9/16 | 1/2 | 1 |
| **15-581** | 79-9/16 | 21/32 | 1 |
| **75-480** | 80 | 1/2 | Aramid |
| **75-A78** | 80 | 1/2 | Poly |
| **15-109** | 80 | 5/8 | 1 |
| **75-580** | 80 | 5/8 | Aramid |
| **75-B77** | 80 | 5/8 | Poly |
| **15-653** | 80-1/8 | 21/32 | |
| **15-241** | 80-3/16 | 21/32 | |
| **75-949** | 80-1/4 | 5/8 | 6 |
| **15-030** | 80-5/16 | 5/8 | 1 |
| **15-961** | 80-1/2 | 1/2 | |
| **75-151** | 80-3/4 | 1/2 | 1 |
| **75-481** | 81 | 1/2 | Aramid |
| **75-A79** | 81 | 1/2 | Poly |
| **75-581** | 81 | 5/8 | Aramid |
| **75-B78** | 81 | 5/8 | Poly |
| **75-208** | 81-1/16 | 5/8 | 2 |
| **15-314** | 81-1/8 | 21/32 | |
| **75-178** | 81-1/4 | 5/8 | 1 |
| **15-405** | 81-5/16 | 21/32 | 1 |
| **75-811** | 81-1/2 | 1/2 | 1 |
| **15-045** | 81-1/2 | 5/8 | 6 |
| **15-453** | 81-3/4 | 21/32 | 8 |
| **15-769** | 82 | 1/2 | 1 |
| **75-482** | 82 | 1/2 | Aramid |
| **75-A80** | 82 | 1/2 | Poly |
| **15-137** | 82 | 5/8 | 1 |
| **75-582** | 82 | 5/8 | Aramid |
| **75-B79** | 82 | 5/8 | Poly |
| **15-922** | 82-1/8 | 9/16 | |
| **75-179** | 82-1/8 | 5/8 | 2 |

| OREGON | Length | Width | Type |
|---|---|---|---|
| **15-446** | 82-1/8 | 21/32 | 8 |
| **175-000** | 82-1/4 | 1/2 | 1 |
| **75-000** | 82-1/4 | 1/2 | 1 |
| **75-054** | 82-5/16 | 5/8 | 1 |
| **75-820** | 82-5/16 | 5/8 | 1 |
| **15-810** | 82-5/16 | 21/32 | |
| **15-254** | 82-13/16 | 21/32 | 2 |
| **15-672** | 83 | 1/2 | |
| **75-483** | 83 | 1/2 | Aramid |
| **75-A81** | 83 | 1/2 | Poly |
| **75-583** | 83 | 5/8 | Aramid |
| **75-B80** | 83 | 5/8 | Poly |
| **15-630** | 83-1/8 | 1/2 | |
| **75-005** | 83-1/8 | 1/2 | 1 |
| **75-199** | 83-1/8 | 5/8 | 1 |
| **15-110** | 83-1/4 | 1/2 | 1 |
| **175-195** | 83-1/4 | 1/2 | 1 |
| **75-115** | 83-1/4 | 1/2 | 1 |
| **75-195** | 83-1/4 | 1/2 | 1 |
| **75-361** | 83-1/4 | 5/8 | 1 |
| **75-821** | 83-1/4 | 5/8 | 1 |
| **15-652** | 83-5/16 | 21/32 | |
| **75-898** | 83-3/8 | 1/2 | 2 |
| **15-659** | 83-7/16 | 5/8 | |
| **75-063** | 83-1/2 | 1/2 | 1 |
| **15-700** | 83-3/4 | 1/2 | 1 |
| **15-113** | 83-3/4 | 5/8 | 1 |
| **15-401** | 83-13/16 | 21/32 | 1 |
| **75-484** | 84 | 1/2 | Aramid |
| **75-A82** | 84 | 1/2 | Poly |
| **75-584** | 84 | 5/8 | Aramid |
| **75-B81** | 84 | 5/8 | Poly |
| **175-169** | 84-1/16 | 1/2 | 2 |
| **75-169** | 84-1/16 | 1/2 | 2 |
| **15-529** | 84-1/16 | 21/32 | |
| **15-132** | 84-3/16 | 1/2 | 1 |
| **75-196** | 84-3/16 | 1/2 | 1 |
| **75-226** | 84-3/16 | 5/8 | 2 |
| **75-973** | 84-1/4 | 1/2 | 1 |
| **75-822** | 84-5/16 | 5/8 | 1 |
| **15-421** | 84-5/16 | 21/32 | |
| **15-566** | 84-5/16 | 21/32 | 1 |
| **15-776** | 84-5/16 | 21/32 | 2 |
| **75-266** | 84-11/16 | 1/2 | 1 |
| **15-814** | 84-13/16 | 21/32 | |
| **15-774** | 84-15/16 | 21/32 | 2 |
| **75-485** | 85 | 1/2 | Aramid |
| **75-A83** | 85 | 1/2 | Poly |
| **15-102** | 85 | 5/8 | 8 |
| **75-585** | 85 | 5/8 | Aramid |
| **75-B82** | 85 | 5/8 | Poly |
| **15-762** | 85-1/16 | 21/32 | |
| **75-016** | 85-1/4 | 1/2 | 1 |
| **75-142** | 85-1/4 | 1/2 | 1 |
| **75-180** | 85-1/4 | 5/8 | 2 |
| **15-213** | 85-5/16 | 1/2 | 1 |
| **175-170** | 85-1/2 | 5/8 | 2 |
| **75-170** | 85-1/2 | 5/8 | 2 |
| **75-486** | 86 | 1/2 | Aramid |
| **75-A84** | 86 | 1/2 | Poly |

| OREGON | Length | Width | Type |
|---|---|---|---|
| 75-586 | 86 | 5/8 | Aramid |
| 75-B83 | 86 | 5/8 | Poly |
| 75-042 | 86-1/8 | 1/2 | 1 |
| 75-138 | 86-1/4 | 5/8 | 1 |
| 175-041 | 86-3/8 | 1/2 | 1 |
| 75-041 | 86-3/8 | 1/2 | 1 |
| 15-878 | 86-3/8 | 21/32 | |
| 15-680 | 86-1/2 | 21/32 | 1 |
| 75-487 | 87 | 1/2 | Aramid |
| 75-A85 | 87 | 1/2 | Poly |
| 75-587 | 87 | 5/8 | Aramid |
| 75-B84 | 87 | 5/8 | Poly |
| 75-661 | 87-1/8 | 5/8 | 2 |
| 75-934 | 87-1/4 | 1/2 | 1 |
| 75-072 | 87-1/4 | 5/8 | 2 |
| 75-113 | 87-1/4 | 5/8 | 1 |
| 15-583 | 87-5/16 | 21/32 | 1 |
| 75-129 | 87-3/8 | 1/2 | 1 |
| 75-899 | 87-3/8 | 1/2 | 1 |
| 15-576 | 87-7/16 | 21/32 | 1 |
| 115-029 | 87-5/8 | 1/2 | 1 |
| 15-029 | 87-5/8 | 1/2 | 1 |
| 15-654 | 87-7/8 | 1/2 | |
| 15-231 | 88 | 1/2 | 1 |
| 75-488 | 88 | 1/2 | Aramid |
| 75-A86 | 88 | 1/2 | Poly |
| 75-588 | 88 | 5/8 | Aramid |
| 75-B85 | 88 | 5/8 | Poly |
| 15-455 | 88-1/16 | 21/32 | 8 |
| 15-664 | 88-1/4 | 1/2 | |
| 75-026 | 88-1/4 | 1/2 | 1 |
| 75-935 | 88-1/4 | 1/2 | 1 |
| 75-936 | 88-1/4 | 1/2 | 2 |
| 75-031 | 88-1/4 | 5/8 | 1 |
| 15-949 | 88-5/16 | 21/32 | 1 |
| 175-099 | 88-3/8 | 1/2 | 1 |
| 75-099 | 88-3/8 | 1/2 | 1 |
| 15-641 | 88-5/8 | 1/2 | 1 |
| 15-792 | 88-5/8 | 1/2 | 2 |
| 75-964 | 88-5/8 | 1/2 | 1 |
| 75-979 | 88-5/8 | 1/2 | 2 |
| 175-654 | 88-3/4 | 5/8 | 1 |
| 75-654 | 88-3/4 | 5/8 | 1 |
| 15-415 | 88-13/16 | 21/32 | 1 |
| 75-036 | 88-7/8 | 5/8 | 2 |
| 15-920 | 88-7/8 | 21/32 | |
| 15-911 | 88-7/8 | 2-3/16 | |
| 75-489 | 89 | 1/2 | Aramid |
| 75-A87 | 89 | 1/2 | Poly |
| 75-589 | 89 | 5/8 | Aramid |
| 75-B86 | 89 | 5/8 | Poly |
| 15-670 | 89-1/16 | 21/32 | |
| 75-055 | 89-1/4 | 5/8 | 2 |
| 15-413 | 89-5/16 | 21/32 | |
| 15-660 | 89-1/2 | 1/2 | |
| 175-135 | 89-5/8 | 1/2 | 1 |
| 75-135 | 89-5/8 | 1/2 | 1 |
| 15-185 | 90 | 1/2 | |
| 15-493 | 90 | 1/2 | |
| 15-651 | 90 | 1/2 | 1 |
| 75-490 | 90 | 1/2 | Aramid |

| OREGON | Length | Width | Type |
|---|---|---|---|
| 75-A88 | 90 | 1/2 | Poly |
| 75-590 | 90 | 5/8 | Aramid |
| 75-B87 | 90 | 5/8 | Poly |
| 15-669 | 90-1/16 | 21/32 | |
| 75-045 | 90-1/8 | 1/2 | 1 |
| 175-912 | 90-1/8 | 5/8 | 1 |
| 75-181 | 90-1/8 | 5/8 | 2 |
| 75-912 | 90-1/8 | 5/8 | 1 |
| 15-025 | 90-1/4 | 1/2 | 1 |
| 175-171 | 90-1/4 | 1/2 | 1 |
| 75-171 | 90-1/4 | 1/2 | 1 |
| 75-892 | 90-3/8 | 1/2 | 1 |
| 15-417 | 90-3/8 | 21/32 | 1 |
| 15-634 | 90-9/16 | 1/2 | |
| 15-733 | 90-9/16 | 1/2 | 1 |
| 75-152 | 91 | 1/2 | 1 |
| 75-491 | 91 | 1/2 | Aramid |
| 75-A89 | 91 | 1/2 | Poly |
| 175-995 | 91 | 5/8 | 1 |
| 75-591 | 91 | 5/8 | Aramid |
| 75-995 | 91 | 5/8 | 1 |
| 75-B88 | 91 | 5/8 | Poly |
| 15-732 | 91-1/16 | 1/2 | |
| 15-761 | 91-5/16 | 21/32 | |
| 15-575 | 91-7/16 | 21/32 | 1 |
| 15-026 | 91-1/2 | 1/2 | 1 |
| 75-109 | 91-1/2 | 1/2 | 4 |
| 15-436 | 91-5/8 | 21/32 | 2 |
| 15-588 | 91-13/16 | 21/32 | 2 |
| 15-691 | 92 | 1/2 | 2 |
| 75-492 | 92 | 1/2 | Aramid |
| 75-A90 | 92 | 1/2 | Poly |
| 75-592 | 92 | 5/8 | Aramid |
| 75-B89 | 92 | 5/8 | Poly |
| 175-106 | 92-1/4 | 1/2 | 1 |
| 75-106 | 92-1/4 | 1/2 | 1 |
| 75-806 | 92-5/16 | 1/2 | 1 |
| 75-978 | 92-3/8 | 1/2 | 1 |
| 15-035 | 92-5/8 | 1/2 | 1 |
| 15-750 | 92-13/16 | 21/32 | |
| 15-418 | 93 | 1/2 | |
| 15-724 | 93 | 1/2 | 2 |
| 75-493 | 93 | 1/2 | Aramid |
| 75-A91 | 93 | 1/2 | Poly |
| 75-593 | 93 | 5/8 | Aramid |
| 75-B90 | 93 | 5/8 | Poly |
| 75-194 | 93-1/4 | 1/2 | 1 |
| 75-058 | 93-1/4 | 5/8 | 2 |
| 15-930 | 93-3/8 | 21/32 | |
| 15-932 | 93-3/8 | 21/32 | |
| 75-807 | 93-9/16 | 1/2 | 1 |
| 15-486 | 93-3/4 | 1/2 | |
| 75-494 | 94 | 1/2 | Aramid |
| 75-A92 | 94 | 1/2 | Poly |
| 75-594 | 94 | 5/8 | Aramid |
| 75-B91 | 94 | 5/8 | Poly |
| 15-408 | 94-1/16 | 21/32 | |
| 15-951 | 94-1/16 | 21/32 | |
| 15-753 | 94-5/16 | 1/2 | 1 |
| 15-763 | 94-9/16 | 1/2 | 1 |
| 15-926 | 94-9/16 | 21/32 | |

| OREGON | Length | Width | Type |
|---|---|---|---|
| 15-410 | 94-3/4 | 21/32 | |
| 15-644 | 95 | 1/2 | 1 |
| 15-667 | 95 | 1/2 | |
| 75-061 | 95 | 1/2 | 1 |
| 75-495 | 95 | 1/2 | Aramid |
| 75-A93 | 95 | 1/2 | Poly |
| 75-595 | 95 | 5/8 | Aramid |
| 75-B92 | 95 | 5/8 | Poly |
| 75-111 | 95-1/8 | 1/2 | 1 |
| 15-249 | 95-1/8 | 21/32 | |
| 75-167 | 95-1/4 | 1/2 | 1 |
| 15-665 | 95-3/8 | 1/2 | |
| 175-197 | 95-3/8 | 1/2 | 2 |
| 75-197 | 95-3/8 | 1/2 | 2 |
| 15-229 | 95-9/16 | 1/2 | 1 |
| 15-276 | 95-15/16 | 1/2 | 8 |
| 15-535 | 95-15/16 | 1/2 | |
| 75-496 | 96 | 1/2 | Aramid |
| 75-A94 | 96 | 1/2 | Poly |
| 75-596 | 96 | 5/8 | Aramid |
| 75-B93 | 96 | 5/8 | Poly |
| 75-298 | 96-1/4 | 1/2 | 1 |
| 15-057 | 96-5/16 | 5/8 | 1 |
| 15-962 | 96-1/2 | 21/32 | |
| 175-813 | 96-5/8 | 1/2 | 1 |
| 75-813 | 96-5/8 | 1/2 | 1 |
| 15-253 | 96-7/8 | 21/32 | |
| 75-497 | 97 | 1/2 | Aramid |
| 75-A95 | 97 | 1/2 | Poly |
| 75-597 | 97 | 5/8 | Aramid |
| 75-B94 | 97 | 5/8 | Poly |
| 75-209 | 97-1/16 | 1/2 | 1 |
| 175-913 | 97-3/16 | 5/8 | 2 |
| 75-913 | 97-3/16 | 5/8 | 2 |
| 75-263 | 97-1/4 | 5/8 | 1 |
| 15-130 | 97-5/16 | 5/8 | 1 |
| 75-977 | 97-1/2 | 5/8 | 1 |
| 15-227 | 97-9/16 | 1/2 | 1 |
| 15-760 | 97-11/16 | 1/2 | 1 |
| 15-158 | 98 | 1/2 | 1 |
| 75-498 | 98 | 1/2 | Aramid |
| 75-A96 | 98 | 1/2 | Poly |
| 75-598 | 98 | 5/8 | Aramid |
| 75-B95 | 98 | 5/8 | Poly |
| 75-163 | 98-1/4 | 1/2 | 1 |
| 75-108 | 98-1/2 | 1/2 | 1 |
| 15-466 | 98-11/16 | 21/32 | 1 |
| 15-553 | 98-7/8 | 5/8 | 2 |
| 75-499 | 99 | 1/2 | Aramid |
| 75-A97 | 99 | 1/2 | Poly |
| 75-599 | 99 | 5/8 | Aramid |
| 75-B96 | 99 | 5/8 | Poly |
| 75-161 | 99-3/16 | 1/2 | 2 |
| 15-907 | 99-3/16 | 5/8 | |
| 75-022 | 99-5/16 | 1/2 | 2 |
| 15-957 | 99-13/16 | 21/32 | |
| 75-400 | 100 | 1/2 | Aramid |
| 75-A98 | 100 | 1/2 | Poly |
| 75-500 | 100 | 5/8 | Aramid |
| 75-B97 | 100 | 5/8 | Poly |
| 15-593 | 100-1/16 | 1/2 | 1 |

# Belts by Size

| OREGON | Length | Width | Type |
|---|---|---|---|
| **75-364** | 100-1/4 | 5/8 | 1 |
| **15-373** | 100-1/4 | 21/32 | 2 |
| **15-021** | 101 | 1/2 | 1 |
| **75-401** | 101 | 1/2 | Aramid |
| **75-A99** | 101 | 1/2 | Poly |
| **75-B98** | 101 | 5/8 | Poly |
| **15-420** | 101-1/4 | 1/2 | |
| **175-895** | 101-1/4 | 1/2 | 1 |
| **75-895** | 101-1/4 | 1/2 | 1 |
| **75-103** | 101-5/16 | 1/2 | 1 |
| **75-207** | 101-5/16 | 5/8 | 1 |
| **15-315** | 101-3/8 | 7/8 | 2 |
| **15-023** | 101-1/2 | 1/2 | 1 |
| **75-362** | 101-1/2 | 5/8 | 1 |
| **75-246** | 102 | 1/2 | 1 |
| **75-402** | 102 | 1/2 | Aramid |
| **75-A100** | 102 | 1/2 | Poly |
| **75-B99** | 102 | 5/8 | Poly |
| **15-278** | 102-1/16 | 1/2 | 8 |
| **15-463** | 102-1/16 | 5/8 | |
| **75-975** | 102-1/8 | 1/2 | 2 |
| **15-526** | 102-13/16 | 21/32 | |
| **15-027** | 103 | 1/2 | 1 |
| **15-740** | 103 | 1/2 | 2 |
| **15-788** | 103 | 1/2 | 2 |
| **15-923** | 103 | 1/2 | |
| **75-403** | 103 | 1/2 | Aramid |
| **75-A101** | 103 | 1/2 | Poly |
| **75-503** | 103 | 5/8 | Aramid |
| **75-B100** | 103 | 5/8 | Poly |
| **75-155** | 103-3/8 | 5/8 | 1 |
| **175-919** | 103-15/16 | 1/2 | 1 |
| **75-919** | 103-15/16 | 1/2 | 1 |
| **15-549** | 103-15/16 | 1-3/16 | |
| **75-404** | 104 | 1/2 | Aramid |
| **75-A102** | 104 | 1/2 | Poly |
| **75-B101** | 104 | 5/8 | Poly |
| **75-292** | 104-1/16 | 5/8 | 2 |
| **15-629** | 104-7/16 | 1/2 | 2 |
| **75-165** | 104-1/2 | 1/2 | 4 |
| **75-283** | 104-3/4 | 5/8 | 2 |
| **15-256** | 104-7/8 | 21/32 | |
| **115-207** | 105 | 1/2 | |
| **15-623** | 105 | 1/2 | 1 |
| **75-405** | 105 | 1/2 | Aramid |
| **75-A103** | 105 | 1/2 | Poly |
| **75-B102** | 105 | 5/8 | Poly |
| **15-024** | 105-1/8 | 1/2 | 1 |
| **75-672** | 105-1/8 | 1/2 | 1 |
| **15-106** | 105-1/4 | 1/2 | 1 |
| **15-140** | 105-1/4 | 1/2 | 1 |
| **15-589** | 105-5/16 | 1/2 | 2 |
| **15-877** | 105-1/2 | 21/32 | |
| **15-022** | 105-3/4 | 1/2 | 1 |
| **75-406** | 106 | 1/2 | Aramid |
| **75-A104** | 106 | 1/2 | Poly |
| **75-B103** | 106 | 5/8 | Poly |
| **15-034** | 106-1/8 | 1/2 | 1 |
| **15-121** | 106-3/16 | 5/8 | 1 |
| **15-956** | 106-5/16 | 21/32 | |

| OREGON | Length | Width | Type |
|---|---|---|---|
| **15-192** | 106-9/16 | 1/2 | |
| **15-440** | 106-11/16 | 3/4 | |
| **15-304** | 106-3/4 | 1/2 | |
| **75-625** | 106-3/4 | 5/8 | 1 |
| **75-407** | 107 | 1/2 | Aramid |
| **75-A105** | 107 | 1/2 | Poly |
| **75-B104** | 107 | 5/8 | Poly |
| **15-798** | 107-1/16 | 1/2 | 2 |
| **75-808** | 107-1/8 | 1/2 | 2 |
| **15-628** | 107-5/16 | 21/32 | 2 |
| **15-789** | 107-1/2 | 1/2 | |
| **15-746** | 107-9/16 | 1/2 | |
| **75-363** | 107-13/16 | 5/8 | 2 |
| **75-408** | 108 | 1/2 | Aramid |
| **75-A106** | 108 | 1/2 | Poly |
| **75-B105** | 108 | 5/8 | Poly |
| **15-488** | 108-1/16 | 1/2 | 1 |
| **15-704** | 108-1/16 | 1/2 | |
| **175-105** | 108-1/4 | 1/2 | 4 |
| **75-105** | 108-1/4 | 1/2 | 4 |
| **75-243** | 108-5/16 | 5/8 | 2 |
| **75-670** | 108-5/16 | 5/8 | 1 |
| **75-214** | 108-1/2 | 1/2 | 2 |
| **75-409** | 109 | 1/2 | Aramid |
| **75-A107** | 109 | 1/2 | Poly |
| **75-B106** | 109 | 5/8 | Poly |
| **175-714** | 109-1/4 | 1/2 | 1 |
| **75-714** | 109-1/4 | 1/2 | 1 |
| **15-033** | 109-5/16 | 5/8 | 1 |
| **75-267** | 109-5/16 | 5/8 | 1 |
| **15-686** | 109-3/8 | 21/32 | |
| **15-202** | 109-1/2 | 1/2 | |
| **75-410** | 110 | 1/2 | Aramid |
| **75-A108** | 110 | 1/2 | Poly |
| **75-B107** | 110 | 5/8 | Poly |
| **75-411** | 111 | 1/2 | Aramid |
| **75-A109** | 111 | 1/2 | Poly |
| **75-B108** | 111 | 5/8 | Poly |
| **15-705** | 111-1/16 | 1/2 | 1 |
| **75-812** | 111-1/8 | 5/8 | 2 |
| **75-188** | 111-1/4 | 5/8 | 1 |
| **15-013** | 111-5/16 | 5/8 | 1 |
| **175-295** | 111-5/16 | 5/8 | 1 |
| **75-295** | 111-5/16 | 5/8 | 1 |
| **15-269** | 111-3/8 | 21/32 | 2 |
| **15-138** | 111-1/2 | 1/2 | 1 |
| **15-606** | 111-1/2 | 21/32 | 1 |
| **15-352** | 111-7/8 | 21/32 | 1 |
| **15-538** | 111-15/16 | 1-3/16 | |
| **75-412** | 112 | 1/2 | Aramid |
| **75-A110** | 112 | 1/2 | Poly |
| **15-122** | 112 | 5/8 | 1 |
| **75-B109** | 112 | 5/8 | Poly |
| **75-897** | 112-1/8 | 1/2 | 1 |
| **75-114** | 112-3/8 | 1/2 | 1 |
| **15-492** | 112-9/16 | 21/32 | |
| **75-134** | 112-5/8 | 5/8 | 2 |
| **15-711** | 112-11/16 | 1/2 | 1 |
| **15-043** | 112-11/16 | 1-1/4 (2V) | 9 |
| **115-146** | 112-3/4 | 1/2 | 1 |

| OREGON | Length | Width | Type |
|---|---|---|---|
| **75-413** | 113 | 1/2 | Aramid |
| **75-A111** | 113 | 1/2 | Poly |
| **75-B110** | 113 | 5/8 | Poly |
| **15-011** | 113-3/16 | 1-1/4 (2V) | 9 |
| **15-142** | 113-1/2 | 1/2 | 1 |
| **75-414** | 114 | 1/2 | Aramid |
| **75-A112** | 114 | 1/2 | Poly |
| **75-B111** | 114 | 5/8 | Poly |
| **15-350** | 114-1/16 | 1/2 | |
| **15-353** | 114-1/16 | 1/2 | 1 |
| **15-573** | 114-1/16 | 1/2 | 1 |
| **15-605** | 114-1/16 | 1/2 | 1 |
| **15-107** | 114-1/4 | 1/2 | 1 |
| **15-351** | 114-1/4 | 1/2 | |
| **15-734** | 114-1/4 | 1/2 | 1 |
| **15-829** | 114-1/4 | 1/2 | |
| **175-299** | 114-3/8 | 1/2 | 1 |
| **75-299** | 114-3/8 | 1/2 | 1 |
| **15-307** | 114-3/8 | 21/32 | |
| **15-708** | 114-9/16 | 1/2 | |
| **15-242** | 114-5/8 | 21/32 | 1 |
| **75-904** | 114-13/16 | 5/8 | 2 |
| **75-A113** | 115 | 1/2 | Poly |
| **75-B112** | 115 | 5/8 | Poly |
| **75-963** | 115-5/16 | 5/8 | 1 |
| **15-309** | 115-7/16 | 21/32 | |
| **15-434** | 115-3/4 | 21/32 | |
| **75-A114** | 116 | 1/2 | Poly |
| **75-B113** | 116 | 5/8 | Poly |
| **15-963** | 116 | 21/32 | |
| **115-204** | 116-3/16 | 5/8 | |
| **75-757** | 116-5/16 | 1/2 | 1 |
| **15-853** | 116-5/8 | 2-3/16 | |
| **75-417** | 117 | 1/2 | Aramid |
| **75-A115** | 117 | 1/2 | Poly |
| **75-B114** | 117 | 5/8 | Poly |
| **15-265** | 117-1/16 | 21/32 | |
| **75-079** | 117-1/8 | 1/2 | 2 |
| **15-293** | 117-1/8 | 21/32 | |
| **15-681** | 117-1/8 | 21/32 | 1 |
| **15-009** | 117-5/16 | 5/8 | 1 |
| **75-644** | 117-1/2 | 5/8 | 1 |
| **75-044** | 117-5/8 | 5/8 | 1 |
| **15-364** | 117-7/8 | 21/32 | 1 |
| **75-A116** | 118 | 1/2 | Poly |
| **75-B115** | 118 | 5/8 | Poly |
| **175-706** | 118-5/16 | 1/2 | 1 |
| **75-706** | 118-5/16 | 1/2 | 1 |
| **75-946** | 118-3/4 | 5/8 | 2 |
| **15-884** | 118-13/16 | 21/32 | |
| **75-A117** | 119 | 1/2 | Poly |
| **75-B116** | 119 | 5/8 | Poly |
| **15-903** | 119 | 21/32 | |
| **75-701** | 119-3/8 | 1/2 | 1 |
| **15-461** | 119-1/2 | 21/32 | |
| **15-544** | 119-1/2 | 1-3/16 | |
| **15-550** | 119-1/2 | 1-3/16 | |
| **75-371** | 119-3/4 | 1/2 | 2 |
| **15-205** | 120 | 1/2 | 8 |
| **75-A118** | 120 | 1/2 | Poly |

B

| OREGON | Length | Width | Type |
|---|---|---|---|
| 75-B117 | 120 | 5/8 | Poly |
| 15-539 | 120 | 1-3/16 | |
| 75-984 | 120-1/8 | 5/8 | 1 |
| 15-124 | 120-1/4 | 1/2 | 1 |
| 75-957 | 120-1/4 | 1/2 | 1 |
| 15-490 | 120-9/16 | 21/32 | |
| 15-317 | 120-3/4 | 21/32 | |
| 15-498 | 120-15/16 | 21/32 | 1 |
| 75-A119 | 121 | 1/2 | Poly |
| 75-B118 | 121 | 5/8 | Poly |
| 75-681 | 121-1/8 | 5/8 | 1 |
| 15-318 | 121-1/8 | 21/32 | |
| 15-217 | 121-3/8 | 1/2 | 1 |
| 15-627 | 121-3/4 | 1/2 | 2 |
| 15-152 | 121-7/8 | 21/32 | |
| 15-303 | 121-15/16 | 7/16 | |
| 15-108 | 122 | 1/2 | 1 |
| 75-A120 | 122 | 1/2 | Poly |
| 75-B119 | 122 | 5/8 | Poly |
| 75-816 | 122-1/8 | 1/2 | 1 |
| 15-574 | 122-5/16 | 1/2 | 1 |
| 175-815 | 122-1/2 | 1/2 | 1 |
| 75-815 | 122-1/2 | 1/2 | 1 |
| 15-286 | 122-13/16 | 21/32 | 8 |
| 75-A121 | 123 | 1/2 | Poly |
| 75-B120 | 123 | 5/8 | Poly |
| 75-373 | 123-1/32 | 1/2 | 4 |
| 75-270 | 123-5/16 | 5/8 | 1 |
| 15-287 | 123-5/16 | 21/32 | 2 |
| 15-173 | 123-3/8 | 21/32 | 1 |
| 15-012 | 123-7/16 | 1-1/4 (2V) | 9 |
| 15-295 | 123-15/16 | 21/32 | |
| 75-A122 | 124 | 1/2 | Poly |
| 75-B121 | 124 | 5/8 | Poly |
| 15-797 | 125 | 1/2 | |
| 75-A123 | 125 | 1/2 | Poly |
| 75-B122 | 125 | 5/8 | Poly |
| 15-037 | 125-3/8 | 5/8 (BB) | 4 |
| 75-645 | 125-1/2 | 5/8 | 1 |
| 75-A124 | 126 | 1/2 | Poly |
| 15-039 | 126 | 5/8 | 1 |
| 75-B123 | 126 | 5/8 | Poly |
| 15-731 | 126-1/16 | 1/2 | 2 |
| 15-812 | 126-9/16 | 1/2 | |
| 15-170 | 126-7/8 | 21/32 | 1 |
| 15-873 | 126-7/8 | 21/32 | |
| 75-A125 | 127 | 1/2 | Poly |
| 75-B124 | 127 | 5/8 | Poly |
| 15-467 | 127-1/16 | 21/32 | 1 |
| 75-759 | 127-1/2 | 1/2 | 1 |
| 15-188 | 127-5/8 | 1/2 | |
| 75-A126 | 128 | 1/2 | Poly |
| 75-B125 | 128 | 5/8 | Poly |
| 75-211 | 128-5/16 | 5/8 | 2 |
| 15-216 | 128-13/16 | 1/2 | 1 |
| 75-960 | 128-13/16 | 5/8 | 1 |
| 75-A127 | 129 | 1/2 | Poly |
| 75-B126 | 129 | 5/8 | Poly |
| 15-546 | 129-1/16 | 21/32 | |
| 15-491 | 129-1/16 | 1-13/16 | |
| 15-545 | 129-1/2 | 1-1/8 | |
| 15-887 | 129-5/8 | 21/32 | |
| 15-355 | 130 | 1/2 | |
| 75-A128 | 130 | 1/2 | Poly |
| 75-B127 | 130 | 5/8 | Poly |
| 15-821 | 130-1/16 | 1/2 | 1 |
| 15-305 | 130-1/8 | 21/32 | |
| 75-296 | 130-3/16 | 5/8 | 4 |
| 75-A129 | 131 | 1/2 | Poly |
| 75-B128 | 131 | 5/8 | Poly |
| 15-243 | 131-3/16 | 21/32 | 1 |
| 75-716 | 131-5/16 | 5/8 | 1 |
| 15-174 | 131-5/8 | 21/32 | 1 |
| 15-288 | 131-5/8 | 21/32 | 8 |
| 15-154 | 131-3/4 | 21/32 | |
| 15-310 | 131-13/16 | 21/32 | |
| 75-A130 | 132 | 1/2 | Poly |
| 75-B129 | 132 | 5/8 | Poly |
| 15-368 | 132-3/8 | 9/16 | |
| 15-368 | 132-3/8 | 9/16 | |
| 75-634 | 132-1/2 | 5/8 | 1 |
| 15-435 | 132-7/8 | 21/32 | |
| 15-899 | 132-7/8 | 21/32 | |
| 75-A131 | 133 | 1/2 | Poly |
| 75-B130 | 133 | 5/8 | Poly |
| 15-879 | 133 | 21/32 | |
| 15-297 | 133-1/16 | 21/32 | |
| 75-193 | 133-5/16 | 5/8 | 2 |
| 115-214 | 133-1/2 | 5/8 | |
| 175-814 | 133-13/16 | 5/8 | 1 |
| 75-814 | 133-13/16 | 5/8 | 1 |
| 15-394 | 133-13/16 | 21/32 | 1 |
| 175-710 | 134 | 1/2 | 1 |
| 75-710 | 134 | 1/2 | 1 |
| 75-A132 | 134 | 1/2 | Poly |
| 75-B131 | 134 | 5/8 | Poly |
| 15-683 | 134-1/8 | 21/32 | |
| 15-412 | 134-3/8 | 1/2 | 8 |
| 15-739 | 134-3/8 | 1/2 | 2 |
| 15-898 | 134-3/8 | 1/2 | |
| 15-459 | 134-1/2 | 5/8 | |
| 15-164 | 134-3/4 | 21/32 | 1 |
| 15-896 | 134-7/8 | 21/32 | |
| 75-A133 | 135 | 1/2 | Poly |
| 75-B132 | 135 | 5/8 | Poly |
| 75-370 | 135-3/8 | 5/8 | 2 |
| 15-674 | 135-9/16 | 21/32 | |
| 75-242 | 135-5/8 | 5/8 | 4 |
| 75-646 | 135-3/4 | 5/8 | 1 |
| 15-512 | 135-7/8 | 21/32 | |
| 15-916 | 135-7/8 | 21/32 | |
| 15-852 | 135-15/16 | 21/32 | |
| 75-A134 | 136 | 1/2 | Poly |
| 15-125 | 136 | 5/8 | 1 |
| 75-B133 | 136 | 5/8 | Poly |
| 15-548 | 136-1/2 | 1-3/16 | |
| 115-706 | 136-1/2 | 5/8 | 1 |
| 15-250 | 136-9/16 | 21/32 | |
| 15-809 | 136-9/16 | 21/32 | |
| 75-A135 | 137 | 1/2 | Poly |
| 15-134 | 137 | 5/8 | 1 |
| 75-B134 | 137 | 5/8 | Poly |
| 75-230 | 137-1/8 | 5/8 | 1 |
| 15-547 | 137-1/8 | 1-3/16 | |
| 15-036 | 137-3/8 | 5/8 (BB) | 4 |
| 15-943 | 137-1/2 | 21/32 | |
| 15-863 | 137-11/16 | 1/2 | |
| 75-247 | 137-3/4 | 1/2 | 1 |
| 75-A136 | 138 | 1/2 | Poly |
| 75-B135 | 138 | 5/8 | Poly |
| 175-994 | 138-3/16 | 5/8 | 1 |
| 75-994 | 138-3/16 | 5/8 | 1 |
| 15-820 | 138-3/8 | 1/2 | |
| 15-897 | 138-3/8 | 1/2 | 2 |
| 15-945 | 138-1/2 | 1/2 | |
| 15-018 | 138-1/2 | 5/8 | 1 |
| 15-741 | 138-9/16 | 1/2 | 2 |
| 15-938 | 138-9/16 | 1/2 | |
| 15-159 | 138-5/8 | 21/32 | |
| 175-894 | 138-3/4 | 5/8 | 2 |
| 75-894 | 138-3/4 | 5/8 | 2 |
| 75-A137 | 139 | 1/2 | Poly |
| 75-B136 | 139 | 5/8 | Poly |
| 15-370 | 139-1/16 | 21/32 | 1 |
| 15-901 | 139-1/8 | 21/32 | |
| 75-945 | 139-7/16 | 5/8 | 1 |
| 175-992 | 139-11/16 | 1/2 | 2 |
| 75-992 | 139-11/16 | 1/2 | 2 |
| 15-795 | 139-7/8 | 1/2 | 2 |
| 75-A138 | 140 | 1/2 | Poly |
| 75-B137 | 140 | 5/8 | Poly |
| 75-216 | 140-1/8 | 5/8 | 1 |
| 15-541 | 140-1/2 | 1-1/8 | |
| 75-A139 | 141 | 1/2 | Poly |
| 75-648 | 141 | 5/8 | 1 |
| 75-B138 | 141 | 5/8 | Poly |
| 15-874 | 141 | 21/32 | |
| 15-143 | 141-1/4 | 1/2 | 1 |
| 75-800 | 141-3/8 | 1/2 | 2 |
| 15-825 | 141-7/8 | 21/32 | 2 |
| 75-A140 | 142 | 1/2 | Poly |
| 115-203 | 142 | 5/8 | |
| 15-010 | 142 | 5/8 | 2 |
| 75-B139 | 142 | 5/8 | Poly |
| 15-828 | 142-1/4 | 21/32 | 1 |
| 75-804 | 142-5/16 | 1/2 | 1 |
| 15-167 | 142-3/8 | 21/32 | 1 |
| 175-810 | 142-1/2 | 5/8 | 2 |
| 75-810 | 142-1/2 | 5/8 | 2 |
| 115-200 | 142-3/4 | 1/2 | |
| 15-673 | 142-7/8 | 21/32 | 2 |
| 75-A141 | 143 | 1/2 | Poly |
| 15-112 | 143 | 5/8 | 1 |
| 75-B140 | 143 | 5/8 | Poly |
| 75-297 | 143-1/8 | 1/2 | 1 |
| 75-232 | 143-1/8 | 5/8 | 2 |
| 75-756 | 143-1/4 | 5/8 | 1 |
| 15-958 | 143-3/8 | 21/32 | 1 |
| 75-802 | 143-5/8 | 1/2 | 1 |
| 15-824 | 143-5/8 | 21/32 | 2 |

# Belts by Size

| OREGON | Length | Width | Type |
|---|---|---|---|
| **15-882** | 143-5/8 | 21/32 | |
| **75-A142** | 144 | 1/2 | Poly |
| **75-B141** | 144 | 5/8 | Poly |
| **15-371** | 144-3/16 | 21/32 | 2 |
| **15-234** | 144-7/8 | 21/32 | 1 |
| **75-A143** | 145 | 1/2 | Poly |
| **75-B142** | 145 | 5/8 | Poly |
| **15-369** | 145-3/16 | 21/32 | 1 |
| **15-473** | 145-3/8 | 21/32 | 1 |
| **15-389** | 145-7/16 | 21/32 | |
| **15-126** | 145-1/2 | 5/8 | 1 |
| **15-180** | 145-9/16 | 21/32 | 1 |
| **75-A144** | 146 | 1/2 | Poly |
| **75-B143** | 146 | 5/8 | Poly |
| **15-356** | 146-1/8 | 1/2 | 1 |
| **15-017** | 146-1/8 | 5/8 | 1 |
| **75-186** | 146-1/8 | 5/8 | 1 |
| **175-803** | 146-3/16 | 1/2 | 1 |
| **75-803** | 146-3/16 | 1/2 | 1 |
| **15-049** | 146-1/4 | 1/2 | 1 |
| **75-A145** | 147 | 1/2 | Poly |
| **75-B144** | 147 | 5/8 | Poly |
| **15-805** | 147-1/16 | 1/2 | |
| **75-669** | 147-1/8 | 5/8 | 1 |
| **15-827** | 147-3/8 | 21/32 | 1 |
| **15-871** | 147-9/16 | 21/32 | |
| **115-205** | 147-3/4 | 5/8 | |
| **175-893** | 147-7/8 | 5/8 | 2 |
| **75-682** | 147-7/8 | 5/8 | 1 |
| **75-893** | 147-7/8 | 5/8 | 2 |
| **75-A146** | 148 | 1/2 | Poly |
| **75-B145** | 148 | 5/8 | Poly |
| **15-308** | 148-1/8 | 21/32 | |
| **15-156** | 148-1/2 | 21/32 | |
| **75-649** | 148-5/8 | 5/8 | 1 |
| **75-A147** | 149 | 1/2 | Poly |
| **75-B146** | 149 | 5/8 | Poly |
| **75-635** | 149-3/8 | 5/8 | 1 |
| **15-171** | 149-1/2 | 21/32 | 1 |
| **15-497** | 149-15/16 | 1/2 | |
| **15-235** | 149-15/16 | 5/8 | 1 |
| **75-A148** | 150 | 1/2 | Poly |
| **115-213** | 150 | 5/8 | |
| **75-B147** | 150 | 5/8 | Poly |
| **15-507** | 150-5/16 | 21/32 | 1 |
| **75-944** | 150-9/16 | 5/8 | 1 |
| **15-513** | 150-7/8 | 21/32 | |
| **75-A149** | 151 | 1/2 | Poly |
| **75-B148** | 151 | 5/8 | Poly |
| **75-755** | 151-1/8 | 5/8 | 1 |
| **15-215** | 151-5/16 | 1/2 | 1 |
| **15-768** | 151-5/16 | 1/2 | 1 |
| **15-514** | 151-3/4 | 1-3/8 | |
| **15-865** | 151-7/8 | 1/2 | |
| **75-819** | 151-7/8 | 5/8 | 1 |
| **15-236** | 151-7/8 | 21/32 | 1 |
| **75-A150** | 152 | 1/2 | Poly |
| **15-135** | 152 | 5/8 | 1 |
| **75-B149** | 152 | 5/8 | Poly |
| **75-B150** | 153 | 5/8 | Poly |

| OREGON | Length | Width | Type |
|---|---|---|---|
| **15-119** | 153-3/4 | 5/8 | 1 |
| **15-127** | 153-3/4 | 5/8 | 1 |
| **75-961** | 153-3/4 | 5/8 | 1 |
| **15-129** | 154 | 5/8 | 1 |
| **75-629** | 155 | 5/8 | 1 |
| **115-202** | 155-1/2 | 5/8 | |
| **15-838** | 155-13/16 | 1/2 | |
| **15-237** | 155-7/8 | 21/32 | 1 |
| **15-264** | 156-9/16 | 21/32 | |
| **15-913** | 157-3/16 | 21/32 | |
| **75-516** | 157-3/4 | 5/8 | |
| **75-801** | 157-13/16 | 5/8 | 4 |
| **15-826** | 158-5/16 | 21/32 | 1 |
| **15-959** | 158-9/16 | 21/32 | 1 |
| **15-837** | 159-3/16 | 1/2 | |
| **15-358** | 159-3/4 | 1/2 | |
| **15-306** | 160-3/8 | 21/32 | |
| **15-390** | 160-3/8 | 21/32 | 2 |
| **15-855** | 160-9/16 | 21/32 | |
| **75-799** | 161-9/16 | 5/8 | 1 |
| **15-847** | 161-7/8 | 21/32 | |
| **15-028** | 162 | 1/2 | 1 |
| **15-367** | 162 | 7/8 | |
| **15-918** | 162-1/16 | 7/8 | 2 |
| **15-679** | 162-3/8 | 21/32 | 2 |
| **15-128** | 163 | 5/8 | 1 |
| **75-687** | 163-1/4 | 5/8 | 1 |
| **75-515** | 163-1/2 | 5/8 | |
| **75-664** | 165-1/16 | 5/8 | 1 |
| **115-704** | 163-1/2 | 5/8 | 1 |
| **15-515** | 165-13/16 | 1-3/8 | |
| **15-881** | 166 | 7/8 | 2 |
| **115-201** | 167-3/8 | 5/8 | |
| **15-860** | 167-7/8 | 1-3/8 | |
| **15-465** | 168 | 21/32 | 1 |
| **75-967** | 169-1/2 | 5/8 | 1 |
| **15-105** | 170 | 5/8 | 1 |
| **15-038** | 173-1/2 | 7/8 | 1 |
| **115-706** | 173-3/4 | 5/8 | 1 |
| **15-474** | 175-1/8 | 21/32 | 2 |
| **75-631** | 175-3/4 | 5/8 | 1 |
| **75-943** | 175-13/16 | 5/8 | 1 |
| **15-116** | 176 | 5/8 | 1 |
| **15-153** | 176-5/16 | 21/32 | |
| **15-525** | 176-3/8 | 21/32 | 2 |
| **15-019** | 177 | 5/8 | 1 |
| **15-849** | 177-7/8 | 21/32 | |
| **75-662** | 178 | 5/8 | 1 |
| **15-895** | 178-1/16 | 21/32 | |
| **115-216** | 180 | 5/8 | |
| **15-042** | 180-1/4 | 5/8 | 1 |
| **15-360** | 181-5/8 | 1/2 | 1 |
| **75-688** | 183 | 5/8 | 1 |
| **15-050** | 183-5/8 | 5/8 | 1 |
| **15-155** | 185-3/4 | 21/32 | |
| **15-115** | 186 | 5/8 | 1 |
| **15-238** | 188-7/8 | 21/32 | 1 |
| **15-500** | 189-3/8 | 21/32 | 1 |
| **75-665** | 194-1/2 | 5/8 | 1 |
| **15-856** | 197-15/16 | 21/32 | |

| OREGON | Length | Width | Type |
|---|---|---|---|
| **15-117** | 199 | 5/8 | 1 |
| **15-854** | 199-3/4 | 21/32 | |
| **15-864** | 201-1/2 | 21/32 | |
| **15-890** | 202-15/16 | 21/32 | |
| **15-888** | 209-1/4 | 21/32 | |
| **15-875** | 209-13/16 | 21/32 | |
| **115-215** | 213-7/16 | 5/8 | |
| **15-232** | 218-15/16 | 21/32 | 1 |
| **15-858** | 218-15/16 | 21/32 | |
| **75-514** | 219-1/4 | 5/8 | 1 |
| **15-885** | 220-7/16 | 21/32 | |
| **15-886** | 222-5/8 | 21/32 | |
| **15-889** | 225-3/8 | 21/32 | |
| **15-906** | 226-3/4 | 21/32 | |
| **15-891** | 229-1/2 | 21/32 | |
| **15-869** | 234 | 21/32 | |
| **15-233** | 235-5/8 | 21/32 | 1 |
| **15-239** | 237-3/4 | 21/32 | 1 |
| **15-914** | 241-15/16 | 21/32 | |
| **75-887** | 242-13/32 | 5/8 | 1 |
| **15-876** | 245-5/8 | 21/32 | |
| **15-894** | 246-5/8 | 21/32 | |
| **15-848** | 249-13/16 | 21/32 | |
| **15-240** | 251-3/8 | 21/32 | 1 |
| **15-850** | 256-1/2 | 21/32 | |
| **15-893** | 258-1/4 | 21/32 | |
| **15-867** | 259-7/8 | 21/32 | |
| **15-892** | 264-3/16 | 21/32 | |
| **75-888** | 264-13/32 | 5/8 | 1 |
| **15-851** | 266-1/2 | 21/32 | |
| **15-868** | 271-5/8 | 21/32 | |
| **15-870** | 277-5/8 | 7/8 | 2 |
| **115-217** | 278-3/4 | 5/8 | |
| **15-883** | 286-7/16 | 21/32 | |

B

| OREGON | Replaces | Size | Description | Type | Product Code |
|---|---|---|---|---|---|
| **AMF** | | | | | |
| **15-654** | 33125<br>49330<br>301935 | 1/2" X 87-7/8" | **Premium Belt** | 7 | |
| **15-657** | 45186 | 1/2" X 62-7/8" | **Premium Belt**<br>Fits 32" decks | 7 | |
| **15-659** | 49878 | 5/8" X 83-7/16" | **Premium Belt** | 7 | |
| **15-660** | 57556 | 1/2" X 89-1/2" | **Premium Belt** | 1 | |
| **15-649** | 300575 | 1/2" X 34-1/16" | **Premium Belt** | 1 | |
| **15-650** | 302289 | 21/32" X 74-1/16" | **Premium Belt** | 7 | |
| **15-651** | 303241 | 1/2" X 90" | **Premium Belt** | 1 | |
| **15-652** | 305148 | 21/32" X 83-5/16" | **Premium Belt** | 1 | |
| **15-653** | 308701 | 21/32" X 80-1/8" | **Premium Belt** | 7 | |
| **AYP** | | | | | |
| **15-716** | 74977<br>91786042 | 3/8" X 35-3/4" | **Premium Belt** | 2 | |
| **15-718** | 88074 | 3/8" X 39-1/4" | **Premium Belt** | 2 | |
| **15-472** | 110411<br>539110411 | 1/2" X 56" | **Premium Belt** – Hydro Drive | 1 | |
| **15-473** | 110832<br>539110832<br>510201101 | 21/32" X 145-7/16" | **Premium Belt** – Deck Drive<br>For 42" decks | 1 | |
| **15-474** | 112529<br>539112529 | 21/32" X 175-1/8" | **Premium Belt** – Deck Drive<br>For 52" decks | 2 | |
| **15-700** | 141416<br>532141416 | 1/2" X 83-3/4" | **Premium Belt** – Ground Drive<br>For lawn tractors (1995–1999) | 1 | |
| **15-704** | 165555<br>53216555 | 1/2" X 108-1/16" | **Premium Belt** – Deck Drive AA<br>For rear discharge 36" lawn tractors (1999 & earlier) | 4 | |
| **15-705** | 165631<br>532165631 | 1/2" X 111-1/16" | **Premium Belt** – Ground Drive<br>For rear discharge lawn tractors (1999 & earlier) | 1 | |
| **15-708** | 169178<br>532169178 | 1/2" X 114-9/16" | **Premium Belt** – Deck Drive AA<br>For rear discharge 42" lawn tractors (1999 & earlier) | 4 | |
| **15-223** | 169778<br>532169778 | 3/8" X 33-1/4" | **Premium Belt** – Ground Drive<br>For 21" self-propelled mower (2004) | 7 | |
| **15-711** | 170140<br>532170140 | 1/2" X 112-11/16" | **Premium Belt** – Ground Drive<br>For rear discharge lawn tractors (2006–2012) | 1 | |

# Belts

## AYP

| OREGON | Replaces | Size | Description | Type | Product Code |
|---|---|---|---|---|---|
| **15-712** | 179092<br>532179092 | 1/2" X 34-1/2" | **Premium Belt** – Ground Drive<br>For 2-stage snow throwers (2002–2004) | 7 | |
| **15-224** | 182212<br>532182212 | 3/8" X 34-5/8" | **Premium Belt** – Ground Drive<br>For 21" self-propelled mower (2004–2005) | 7 | |
| **15-225** | 183688<br>532183688 | 5/16" X 34-7/16" | **Premium Belt** – Ground Drive<br>For 21" self-propelled EZ walk high wheel mowers (2005) | 7 | |
| **15-226** | 185476<br>532185476 | 3/8" X 42-5/16" | **Premium Belt** – Cutter Drive<br>For wheeled string trimmers | 7 | |
| **15-227** | 194346<br>532194346 | 1/2" X 97-9/16" | **Premium Belt** – Ground Drive<br>For lawn tractors (2009–2012) | 1 | |
| **15-228** | 196853<br>532196853 | 3/8" X 32-1/4" | **Premium Belt** – Ground Drive<br>For 21" self-propelled mowers | 7 | |
| **15-229** | 401603<br>532401603 | 1/2" X 95-9/16" | **Premium Belt** – Ground Drive<br>For lawn tractors (2006–2008) | 1 | |
| **15-230** | 408010<br>532408010 | 9/16" X 37-1/8" | **Premium Belt** – Impeller Drive<br>For 2-stage snow throwers | 7 | |
| **15-231** | 419271<br>532419271 | 1/2" X 88" | **Premium Belt** – Deck Drive<br>For riding mowers with 30" decks (2010–2012) | 1 | |
| **15-717** | 850053<br>532850053 | 3/8" X 38-5/16" | **Premium Belt** – Ground Drive<br>For 20" self-propelled mower (1999 & earlier) | 7 | |
| **15-715** | 062828<br>917532062828 | 1/2" X 69" | **Premium Belt** – Deck Drive<br>For lawn tractors with 36" decks (1999 & earlier) | 1 | |
| **15-688** | 102655X<br>917102655X | 1/2" X 38" | **Premium Belt** – Impeller Drive<br>For 2-stage snow throwers | 2 | |
| **15-691** | 106863X<br>108597X | 1/2" X 92" | **Premium Belt** – Deck Drive<br>For garden tractors with 44" decks (1999 & earlier) | 2 | |
| **15-693** | 111924X<br>532111924 | 3/8" X 31-3/4" | **Premium Belt** – Ground Drive<br>For 20" self-propelled mowers (1999 & earlier) | 7 | |
| **15-695** | 124293X<br>532124293X | 1/2" X 79-9/16" | **Premium Belt** – Deck Drive<br>For lawn tractors with 36" decks (1999 & earlier) | 1 | |
| **15-719** | 9180R | 1/2" X 41" | **Premium Belt** – Tine Drive<br>For front tine tillers (1995–2010) | 2 | |
| **75-115** | 1629J | 1/2" x 83-1/4" | **Premium Belt** – Transmission<br>Fits Sears model 917.255702-3 | 1 | |
| **75-107** | 106085X<br>532106085 | 1/2" x 79" | **Premium Belt** – Mower Deck<br>For 36", 38", & 44" decks (1991–1999) | 1 | |

B

## AYP

| OREGON | Replaces | Size | Description | Type | Product Code |
|---|---|---|---|---|---|
| **15-024** | 539110410 | 1/2" x 105-1/8" | **Premium Belt** – Mower Deck<br>For mower deck drive, 42" zero turn mowers (2004–2007)<br>Fits models Z4217, Z4218, Z4219, CZ4217, & CZ42175 | 1 | |
| **75-108** | 110883X<br>532110883 | 1/2" x 98-1/2" | **Premium Belt** – Transmission<br>For 18 HP & 20 HP mowers (1991–1999), non-hydro | 1 | |
| **75-194** | 110884X<br>532110884 | 1/2" x 93-1/4" | **Premium Belt** – PTO<br>Fits XEG11082HAR & Poulan Pro PP2050 | 1 | |
| **75-171** | 125907X<br>532125907 | 1/2" x 90-1/4" | **Premium Belt** – Transmission<br>For 14 HP with 38" cut deck | 1 | |
| **175-171** | | | **Belt** – Standard Version of 75-171 | 1 | |
| **75-935** | 126520X<br>532126520 | 1/2"x 88-1/4" | **Premium Belt** – Transmission Drive<br>Fits PP125R38J & JA models<br>For 12 HP with 36" & 38" deck (peerless drive only) | 1 | |
| **75-106** | 130969<br>532130969 | 1/2" x 92-1/4" | **Premium Belt** – Mower Deck / Hydro Transmission<br>For mower deck drive belt on 42" cut deck (1992–1999), & hydro transmission drive belt (2006–2010) | 1 | |
| **175-106** | | | **Belt** – Standard Version of 75-106 | | |
| **75-163** | 131006<br>532131006 | 1/2" x 98-1/4" | **Premium Belt** – Mower Deck<br>For 18 HP front engine tractor with 42" deck | 1 | |
| **75-097** | 131264<br>532131264 | 1/2" x 78-3/8" | **Premium Belt** – Mower Deck<br>For 36" mowers (1992–1999), & 44" mowers (1994) | 1 | |
| **75-936** | 131290<br>532131290 | 1/2" x 88-1/4" | **Premium Belt** – Mower Deck<br>For 38" & 44" riders, 38" & 44" lawn tractors with 11 HP thru 18 HP engines | 2 | |
| **75-889** | 132801<br>532132801 | 1/2" x 52-5/16" | **Premium Belt** – Transmission<br>For rear tine tillers (1992–2006) | 1 | |
| **75-890** | 133035<br>532133035<br>532124970 | 1/2" x 41-3/8" | **Premium Belt** – Forward Drive<br>For front tine tillers (1995–2004) | 1 | |
| **75-195** | 137153<br>532137153 | 1/2" x 83-1/4" | **Premium Belt** – Ground Drive<br>For 20 HP with 46" & 50" deck, models 1994–1997 | 1 | |
| **175-195** | | | **Belt** – Standard Version of 75-195 | | |
| **75-167** | 138255<br>532138255 | 1/2" x 95-1/4" | **Premium Belt** – Mower Deck<br>For 42" & 50" decks with 20 HP Kohler engines | 1 | |
| **75-169** | 139573<br>130801<br>160855<br>532139573 | 1/2" x 84-1/6" | **Premium Belt** – Mower Deck<br>For primary mower drive belt, tractor to mower, 50" deck with 20 HP & 22 HP Kohler engines, & 46" deck with 18 HP Kohler engines (1994–1995) & (1997–1998) | 2 | |
| **175-169** | | | **Belt** – Standard Version of 75-169 | 2 | |

B

# Belts

## AYP

| OREGON | Replaces | Size | Description | Type | Product Code |
|---|---|---|---|---|---|
| **75-196** | 140218<br>532140218 | 1/2" x 84-3/16" | **Premium Belt** – Ground Drive<br>For 20 & 22 HP models with 46" & 50" deck (1998 & newer) | 1 | |
| **75-000** | 140294<br>532140294 | 1/2" x 82-1/4" | **Premium Belt** – Hydro Transmission<br>For 42" & 44" cut, 18 & 18.5 HP lawn tractors with hydrostatic transmission | 1 | |
| **175-000** | | | **Belt** – Standard Version of 75-000 | 1 | |
| **75-099** | 144200<br>532144200<br>531007562<br>532131290 | 1/2" x 88-3/8" | **Premium Belt** – Mower Deck<br>For 38" & 42" decks with double idler pulleys | 1 | |
| **175-099** | | | **Belt** – Standard Version of 75-099 | 1 | |
| **75-197** | 144959<br>532144959 | 1/2" x 95-3/8" | **Premium Belt** – Deck<br>For 42", 46", & 50" deck (1995 & newer) | 1 | |
| **175-197** | | | **Belt** – Standard Version of 75-197 | 1 | |
| **75-170** | 148763<br>532148763 | 5/8" x 85-1/2" | **Premium Belt** – Mower Deck<br>For primary mower drive belt, tractor to mower, 46" & 50" deck with 18 & 20 HP Kohler engines (1995–1997) | 2 | |
| **175-170** | | | **Belt** – Standard Version of 75-170 | 2 | |
| **75-164** | 137078<br>146527<br>157769<br>532137078<br>532157769<br>532146527 | 3/8" x 32-1/2" | **Premium Belt** – Drive<br>For self-propelled, front-wheel drive on 22" walk-behind mowers with rear discharge (1997–1998) | 1 | |
| **175-164** | | | **Belt** – Standard Version of 75-164 | 1 | |
| **75-897** | 165632<br>532165632 | 1/2" x 112-1/8" | **Premium Belt** – Transmission<br>For hydrostatic mowers (1999 & earlier) | 1 | |
| **75-911** | 166060<br>532166060 | 3/8" x 38-1/4" | **Premium Belt** – Transmission<br>For 21" rear bagger, self-propelled mowers (2000–2002) | 2 | |
| **75-912** | 174368A<br>532174368 | 5/8" x 90-1/8" | **Premium Belt** – Mower Deck<br>For primary mower drive, 48" cut (2001–2003) | 1 | |
| **175-912** | | | **Belt** – Standard Version of 75-912 | 1 | |
| **75-913** | 174883<br>532174883 | 5/8" x 97-3/16" | **Premium Belt** – Deck Drive<br>For 42" cut (2002–2003) | 2 | |
| **175-913** | | | **Belt** – Standard Version of 75-913 | 2 | |
| **75-898** | 174978 | 1/2" x 83-3/8" | **Premium Belt** – Mower Deck<br>For 36" mowers | 2 | |
| **75-914** | 175436<br>532175436 | 3/8" x 32-1/4" | **Premium Belt** – Mower Deck<br>For 21" rear bagger, self-propelled mowers (2002–2003) | 1 | |

B

## AYP

| OREGON | Replaces | Size | Description | Type | Product Code |
|---|---|---|---|---|---|
| **15-029** | 178138<br>532178138 | 1/2" x 87-5/8" | **Premium Belt** – Ground Drive<br>For some lawn tractors (2003–2006) | 1 | |
| **115-029** | | | **Belt** – Standard Version of 15-029 | 1 | |
| **75-899** | 180214 | 1/2" x 87-3/8" | **Premium Belt** – Mower Deck<br>For 38" mowers | 1 | |
| **75-654** | 180808<br>174369<br>532180808 | 5/8" x 88-3/4" | **Premium Belt** – Deck<br>For 48" mowers | 1 | |
| **175-654** | | | **Belt** – Standard Version of 75-654 | 1 | |
| **75-810** | 191273<br>532191273 | 5/8" x 142-1/2" | **Premium Belt** – V<br>For deck drive on mowers, 54" cut | 2 | |
| **175-810** | | | **Belt** – Standard Version of 75-810 | 2 | |
| **75-892** | 193214<br>532193214 | 1/2" x 90-3/8" | **Premium Belt** – Mower Deck<br>For 38" mowers (2006) | 1 | |
| **115-205** | 196103<br>53219610 | 5/8" x 147-3/4" | **Belt** – Standard Belt for Deck Drive<br>For many 54" mowers (2006–2012) | 1 | |
| **75-893** | 196103<br>532196103 | 5/8" x 147-7/8" | **Premium Belt** – Mower Deck<br>For 54" mowers (2006) | 2 | |
| **175-893** | | | **Belt** – Standard Version of 75-893 | 2 | |
| **15-020** | 196857<br>532196857 | 3/8 x 32-3/4 | **Premium Belt** – Transmission<br>Fits 21"self propelled models PP675B & XT625Y, Craftsman models 917.375350, 917.375361, 917.375810, 917.375820, & Husqvarna models 6522SH, 62522SH, 6522SL, 67522ES, XT22, & XT722 | 1 | |
| **75-894** | 197242<br>532197242 | 5/8" x 138-3/4" | **Premium Belt** – Mower Deck<br>For 48" mowers (2006) | 2 | |
| **175-894** | | | **Belt** – Standard Version of 75-894 | 2 | |
| **75-895** | 197253<br>532197253 | 1/2" x 101-1/4" | **Premium Belt** – Mower Deck<br>For 42" mowers (2006) | 1 | |
| **175-895** | | | **Belt** – Standard Version of 75-895 | 1 | |
| **15-022** | 405143<br>532405143 | 1/2" x 105-3/4" | **Premium Belt** – Mower Deck<br>Fits 46" cut (2006–2010) mower models PB19546LT, PB195H46YT, PB20H46LT, PB20H46YT, PB22H46YT; Craftsman models 917.289541, 917.289542, 917.289543, 917.289620, 917.289630 & Husqvarna models 2146XLS, 2246XLS, 2346XLS, YTH20K46, YTH21K46, YTH2146XP, YTH22V46, & YTH2246 | 1 | |

B

# Belts

| OREGON | Replaces | Size | Description | Type | Product Code |
|---|---|---|---|---|---|
| **AYP** | | | | | |
| **115-222** | 408010<br>183533 | 5/8" x 38" | **Standard Belt** – Impeller Drive<br>Fits snowblower models 10527SBE (2003–2008), 10530SBE (2006), 1130SBE (2006–2008), 5524SB, 5524SE, 5524ST, 5524STE (2002–2008), 8024ST (2002), 8524ST (2004), 8527SB (2006), 9027ST (2002–2004), 924SB, & 927SB (2006–2008) | 8 | |
| **115-220** | 408007 | 5/8" x 38-1/4" | **Standard Belt** – Impeller Drive<br>Fits snowblower models 10527SB, 1130SB, 5524SB (2008), 14527SB, 15530SB, ST261E (2009), 924SB (2008–2010), 1650EXL, ST230E (2012), 924HV (2010–2013), 5524ST, ST276EP (2012–2013), 11524E, 14527E, & ST268EP (2013) | 8 | |
| **115-221** | 408019 | 5/8" X 39-1/4" | **Standard Belt** – Impeller Drive<br>Fits snowblower models 1130SB (2008), 13524SB, 14527SB, 15530SB, 16530SB, ST261E, ST276EPT (2009), 1330SB (2008–2009), 16527EXL, 16530EXL (2011), 1650EXL, ST2109E, ST268EP, ST276EP (2012), 11524E, 14527E (2010–2012), 924HV (2010–2013), 5524ST, & ST276EP (2012–2013) | 8 | |
| **115-223** | 428454<br>532428454 | 1/2" x 29-1/2" | **Standard Belt** – Traction Drive<br>Fits snow thrower models 1827EXLT & 130EXLT | 1 | |
| **15-023** | 429636<br>532429636 | 1/2" x 101-1/2" | **Premium Belt** – Mower Deck<br>Fits 42" cut mowers, 2009–2010 models PB195H42LT, PB2042YT, & XT195H42LT, Craftsman model 917.289610, & Husqvarna models LTH2042 & YTH2042 | 1 | |
| **Ariens** | | | | | |
| **75-906** | 07200004<br>7200004 | 1/2" x 36" | **Premium Belt** – Auger Drive<br>Fits 924124, 924125, 924126, 924127, 924335, 924336, & 924337 | 1 | |
| **75-907** | 07200007<br>7200007 | 1/2" x 35-3/8" | **Premium Belt** – Auger Drive<br>Fits 932105 & 932506 | 1 | |
| **15-152** | 07200026 | 21/32" X 121-7/8" | **Premium Belt** – PTO to Deck Drive<br>Fits Zoom & Max Zoom mowers with 52" deck | 4 | |
| **15-153** | 07200027 | 21/32" X 176-5/16" | **Premium Belt** – PTO to Deck Drive<br>Fits Pro-Master 200 series mowers with 52" rear discharge decks | 4 | |
| **15-154** | 07200028 | 21/32" X 131-13/16" | **Premium Belt** – PTO to Deck Drive<br>Fits Zoom & Max Zoom mowers with 60" deck | 4 | |
| **15-155** | 07200030 | 21/32" X 185-3/4" | **Premium Belt** – PTO to Deck Drive<br>Fits Pro-Master 200 series mowers with 60" rear discharge decks | 4 | |
| **15-157** | 07200039 | 5/8" X 78-7/8" | **Premium Belt** – Spindle Drive<br>For Pro-Master 200 series mowers with 72" decks | 7 | |
| **15-158** | 07200116 | 1/2" X 98" | **Premium Belt** – Deck Drive<br>Fits Zoom mowers with 34" decks | 1 | |

## Ariens

| OREGON | Replaces | Size | Description | Type | Product Code |
|---|---|---|---|---|---|
| **75-908** | 07200623<br>07200020<br>7200020 | 1/2" x 37-3/8" | **Premium Belt** – Auger Drive<br>Fits 926001, 926002, 926004, 926005, 926101, 926102, 926300, 926301, 926304, & 926504 raw edge | 1 | |
| **15-221** | 07202300<br>72023 | 1/4" X 27-3/4" | **Premium Belt** – Traction Drive<br>For 2-stage snow throwers (Set of 2) | 7 | |
| **75-098** | 07204700<br>72047 | 3/8" x 35-3/4" | **Premium Belt**<br>For snow throwers, older models with single belt | 1 | |
| **15-190** | 07205200<br>72052 | 21/32" X 69-1/16" | **Premium Belt** – Deck Drive<br>For Emperor models with 30" & 38" decks | 7 | |
| **75-080** | 07205600<br>72056 | 1/2" x 32" | **Premium Belt** – Drive<br>For front tine tiller drive, snow thrower auger drive | 1 | |
| **75-067** | 07207400<br>72074 | 1/4" x 27-1/4" | **Premium Belt**<br>For 6 HP "Sno-Thro" models, traction drive - set of 2 | 2 | |
| **15-192** | 07208100<br>72081 | 1/2" X 106-9/16" | **Premium Belt** – Deck Drive<br>For models with 48"decks | 1 | |
| **75-117** | 07208600<br>72086 | 1/2" x 40-1/4" | **Premium Belt**<br>For snow throwers. Fits model 924082 with 8 HP engine | 1 | |
| **75-096** | 07210800<br>07206700<br>07208300<br>07206100<br>72108 | 1/2" x 36-3/4" | **Premium Belt**<br>For snowblowers<br>Fits 925084 with 10 HP engine | 1 | |
| **75-084** | 07211400<br>72114 | 1/2" x 34-3/4" | **Premium Belt** – Cogged<br>Fits snow thrower drive on Trac Team 832004 | 6 | |
| **75-086** | 07216900<br>07211300<br>72169 | 1/2" x 65-1/4" | **Premium Belt** – Blade Drive<br>Fits 831026, 30" cut (1981 & newer) | 1 | |
| **75-087** | 07217100<br>07213800<br>72171 | 3/8" x 32" | **Premium Belt** – Cogged<br>For SP drive on walk-behind mowers, newer models | 7 | |
| **15-194** | 07213000<br>72130 | 1/2" X 38-5/8" | **Premium Belt** – Wheel Drive<br>For 2-stage snow thowers with Tecumseh engines | 7 | |
| **15-195** | 07213100<br>72131 | 3/8" X 35-7/8" | **Premium Belt** – Drive<br>For 2-stage snow throwers | 7 | |
| **75-909** | 07219100<br>07200021<br>7200021 | 1/2" x 38-3/8" | **Premium Belt** – Auger Drive<br>Fits 926003, 926006, 926103, 926302, 926303, 926500, & 926501 raw edge | 1 | |
| **15-188** | 07219600<br>051213<br>51213 | 1/2" X 127-5/8" | **Premium Belt** – Deck Drive<br>For Zoom models with 40" decks | 2 | |

B

# Belts

| OREGON | Replaces | Size | Description | Type | Product Code |
|---|---|---|---|---|---|
| **Ariens** | | | | | |
| **15-201** | 07223800<br>72238 | 1/2" X 38-13/16" | **Premium Belt** – Hydro Transmission Drive<br>Fits 1232, 1440 Sport Zoom, & Pro 200 mowers | 7 | |
| **15-205** | 07226000<br>72260 | 1/2" X 120" | **Premium Belt** – PTO to Deck Drive<br>Fits 2050 & 2250 Zoom mowers with 50" decks | 7 | |
| **15-193** | 07232100<br>07209800<br>72098 | 3/8" X 33-1/8" | **Premium Belt** – Auger Drive<br>For 22" single stage snow blowers & also on some 2- stage snow thowers as traction drive belt | 7 | |
| **15-208** | 07234500 | 1/2" X 50" | **Premium Belt** – PTO to Deck Drive<br>Fits EZR 1648 & EZR 2048 mowers | 1 | |
| **15-210** | 07235500 | 1/2" X 73-7/8" | **Premium Belt** – Pump Drive<br>Fits Zoom 2050· 992028 (000101 - 029999), EZR 1540, & EZR 1740 mowers | 7 | |
| **75-983** | 07236200<br>7236200 | 1/2 x 37-15/16" | **Premium Belt** – Auger Drive<br>Fits 924500, 924503, & 924506 raw edge | 1 | |
| **15-211** | 07236300<br>72363 | 5/16" X 32-5/8" | **Premium Belt** – Auger Drive<br>For single stage snow throwers | 7 | |
| **15-169** | 07239200 | 1/2" X 67-3/4" | **Premium Belt** – Pump Drive<br>Fits Zoom 2050 · 992028 (030000 - ) & Zoom 2250· 992040 (031000 - ) mowers | 7 | |
| **15-170** | 07239300 | 21/32" X 126-7/8" | **Premium Belt** – PTO to Deck Drive<br>Fits Zoom 2552XL & Zoom 2560XL mowers with 60" decks | 1 | |
| **15-215** | 7241500<br>07241500 | 1-3/8" X 151-3/4" | **Premium Belt** – Deck Drive<br>For Zoom series mowers with 48" decks | 1 | |
| **15-216** | 7241700<br>07241700 | 1/2" X 128-13/16" | **Premium Belt** – Deck Drive<br>For Zoom series mowers with 44" decks | 1 | |
| **15-217** | 7241800<br>07241800 | 1/2" X 121-3/8" | **Premium Belt** – Deck Drive<br>For Zoom series mowers with 40" decks | 1 | |
| **15-181** | 07242800 | 21/32" X 50-1/4" | **Premium Belt** – Pump Drive<br>Fits Pro-Master 200 series mowers | 9 | |
| **75-983** | 07236200<br>7236200 | 1/2 x 37-15/16" | **Premium Belt** – Auger Drive<br>Fits 924500, 924503, & 924506 raw edge | 1 | |
| **115-200** | 07241600 | 1/2" x 142-3/4" | **Belt** – Standard Belt for Deck Drive<br>For many 52" Zoom mowers | 2 | |
| **Bad Boy** | | | | | |
| **115-201** | 041-1650-00 | 5/8" x 167-3/8" | **Belt** – Standard Belt for Deck Drive<br>For 60" decks | 2 | |
| **15-232** | 041-0219-00<br>41021900 | 21/32" X 218-15/16" | **Premium Belt**<br>For AOS 60" gasoline models only | 1 | |
| **15-233** | 041-0236-00<br>41023600 | 21/32" X 235-5/8" | **Premium Belt**<br>For 61 Diesel EZ Ride | 1 | |

B

| OREGON | Replaces | Size | Description | Type | Product Code |
|---|---|---|---|---|---|
| **Bad Boy** | | | | | |
| **15-234** | 041-1420-00<br>41142000 | 21/32" X 145-3/16" | **Premium Belt** – Deck Drive<br>For 48 Pup or Lightning | 1 | |
| **15-235** | 041-1470-00<br>41147000 | 5/8" X 149-15/16" | **Premium Belt** – Deck Drive<br>For 48/50 ZT Elite or CZT | 1 | |
| **15-236** | 041-1490-00<br>41149000 | 1/2" X 151-7/8" | **Premium Belt**<br>For 52 Pup or Lightning | 1 | |
| **15-237** | 041-1560-00 | 21/32" X 156-9/16" | **Premium Belt** – Deck Drive<br>For 54 CZT Elite | 1 | |
| **15-238** | 041-1890-00<br>41189000 | 21/32" X 188-7/8" | **Premium Belt**<br>For 72 Pup or Lightning | 1 | |
| **15-239** | 041-2375-00<br>41237500 | 21/32" X 237-3/4" | **Premium Belt** | 1 | |
| **15-240** | 041-2525-00<br>41252500 | 21/32" X 251-3/8" | **Premium Belt**<br>For 2007 72 diesel models only | 1 | |
| **15-241** | 041-5048-00<br>41504800 | 21/32" X 80-3/16" | **Premium Belt** – Pump Drive<br>For Pup, Lightning, Outlaw, Outlaw Extreme, or Outlaw XP | 7 | |
| **15-242** | 041-5200-00<br>41520000 | 21/32" X 114-5/8" | **Premium Belt**<br>For 36 ZT | 1 | |
| **15-243** | 041-6027-00<br>041602700 | 21/32" X 131-5/8" | **Premium Belt** – Deck Drive<br>For MZ 54" deck | 1 | |
| **15-244** | 041-6400-00<br>041640000 | 1/2" X 66-3/8" | **Premium Belt** – Pump Drive<br>For MZ, MZ Magnum, ZT Elite, or CZT | 7 | |
| **Bobcat** | | | | | |
| **15-253** | 38136 | 21/32" X 96-7/8" | **Premium Belt** – Variable Speed Drive<br>Fits M48-16, M54-12KA, M54-16, XM5400, & XM5401 mowers | 2 | |
| **15-254** | 38275 | 21/32" X 82-13/16" | **Premium Belt** – Variable Speed Drive<br>Fits XM3203, XM3204, XM3603, XM3604, XM4803, & XM4804 mowers | 2 | |
| **15-255** | 38330 | 21/32" X 76-5/16" | **Premium Belt** – PTO<br>Fits XM6150 mowers | 1 | |
| **15-256** | 38331 | 21/32" X 104-7/8" | **Premium Belt** – Deck Drive<br>For 61" decks | 2 | |
| **15-257** | 38362 | 21/32" X 70-5/16" | **Premium Belt** – PTO to Deck<br>For 54" decks | 2 | |
| **15-258** | 38363 | 21/32" X 75-5/16" | **Premium Belt** – PTO to Deck<br>For 61" decks | 2 | |
| **15-259** | 38385 | 1/2" X 55-3/4" | **Premium Belt** – Pump Drive<br>For Hydro midsize mowers | 7 | |

# Belts

## Bobcat

| OREGON | Replaces | Size | Description | Type | Product Code |
|---|---|---|---|---|---|
| **15-260** | 38462 | 21/32" X 51-13/16" | **Premium Belt** – Deck Drive<br>For midsize mowers with 32" decks | 7 | |
| **15-261** | 38528 | 1-3/16" X 51-1/2" | **Premium Belt** – Wheel Drive<br>For midsize mowers with variable speed drive | 5 | |
| **15-262** | 48019 | 3/4" X 37-1/8" | **Premium Belt** – PTO<br>For T-series Jaguar 4-wheel tractors | 5 | |
| **15-266** | 48376 | 1-3/16" X 37-1/2" | **Premium Belt** | 5 | |
| **15-247** | 2188128 | 1/2" X 62-7/8" | **Premium Belt** – Pump Drive<br>For mowers with Hydro drive system | 7 | |
| **15-248** | 2308052 | 1/2" X 46-1/8" | **Premium Belt** – Pump Drive<br>For Hydro midsize power units | 7 | |
| **15-249** | 2720815 | 21/32" X 95-1/8" | **Premium Belt** – PTO to Deck Drive<br>Fits BZT2000 series, ZT200 series, Estate Pro, Z-Fastcat, Leo, Leo Plus, & others with 54" decks | 7 | |
| **15-250** | 2720948<br>48047A | 21/32" X 136-9/16" | **Premium Belt** – Deck Drive<br>Fits FM-48S, FM-61S, & FM-74S front mount decks | 4 | |
| **15-264** | 48238A | 21/32" X 157-3/16" | **Premium Belt** | 4 | |
| **15-265** | 48280A | 21/32" X 117-1/16" | **Premium Belt** | 4 | |
| **15-267** | 78030N | 1/2" X 26" | **Premium Belt** | 7 | |
| **15-268** | 78031N | 3/8" X 26" | **Premium Belt** – Wheel Drive<br>For 21" self-propelled mowers | 7 | |
| **75-240** | 38073N<br>38016N | 5/8" x 35-1/4" | **Premium Belt** – Transmission<br>For all models | 2 | |
| **75-221** | 38017N | 5/8" x 44-5/16" | **Premium Belt** – Wheel Drive<br>For cogged 32" & 48" walk-behinds | 6 | |
| **75-072** | 38076N<br>38111<br>38015N | 5/8" x 87-1/4" | **Premium Belt** – Mower Deck<br>For 36" old style variable speed transmission | 2 | |
| **75-058** | 38077N<br>38030N | 5/8" x 93-1/4" | **Premium Belt** – Mower Deck<br>For 48" blade drive | 2 | |
| **75-212** | 38212 | 1-1/8" x 56-5/8" | **Premium Belt**<br>Double groove for wheels on 5-speed mower | 5 | |
| **75-095** | 38523 | 1-1/8" x 55" | **Premium Belt** – Double Groove, 1/2" Cogged<br>For newer style model 67 series, 5-speed commercial mower | 5 | |
| **75-128** | 38389 | 5/8" x 56-5/16" | **Premium Belt** – Cross Drive Deck<br>For 36" XM series | 1 | |
| **75-180** | 38440 | 5/8" x 85-1/4" | **Premium Belt** – Mower Deck<br>For new style 48" decks on hydro mowers | 2 | |

B

| OREGON | Replaces | Size | Description | Type | Product Code |
|---|---|---|---|---|---|
| **Bobcat** | | | | | |
| **75-130** | 38442 | 5/8" x 68-1/4" | **Premium Belt** – Mower Deck<br>For new style 48" mower | 2 | |
| **75-131** | 38463<br>38458 | 5/8" x 62-1/8" | **Premium Belt** – Mower Deck<br>For 36" XM series mowers | 2 | |
| **75-133** | 38528DF | 1-1/8" x 51-5/16" | **Premium Belt** – Wheel Drive<br>Double grooved for 36" XM series mowers | 5 | |
| **75-193** | 128003 | 5/8" x 133-5/16" | **Premium Belt** – Mower Deck<br>For 61" ZTR mowers | 2 | |
| **75-125** | 128099 | 1/2" x 36-1/4" | **Premium Belt** – Transmission<br>For XM series mowers | 1 | |
| **75-207** | 2188134 | 5/8" x 101-5/16" | **Premium Belt** – Mower Deck<br>For 61" ZTR rider | 1 | |
| **15-101** | 2721477 | 5/8" x 57" | **Premium Belt** – Mower | 8 | |
| **15-102** | 2721478 | 5/8" x 85" | **Premium Belt** – Mower Deck<br>For 36" Cut | 8 | |
| **15-103** | 2721642 | 1/2" x 49" | **Premium Belt** – Pump Drive | 8 | |
| **15-104** | 4143636 | 1/2" x 69" | **Premium Belt** – Transaxle | 8 | |
| **15-105** | 4163569 | 5/8" x 170" | **Premium Belt** – Mower Deck<br>For 36", 42", 48", 52", & 61" mowers | 1 | |
| **Bolens - See MTD** | | | | | |
| **Briggs & Stratton** | | | | | |
| **75-517** | L 708044 | | **Premium** – V-Belt – NEW | | |
| **Bunton** | | | | | |
| **75-101** | PG757 | 1/2" x 30-1/4" | **Premium Belt**<br>Fits models BLM, ET10, & 760 | 1 | |
| **75-222** | PLO511 | 5/8" x 53-5/8" | **Premium Belt** – Mower Deck<br>For 32" & 36" mowers | 1 | |
| **15-289** | PLO543 | 1/2" X 43-1/8" | **Premium Belt** | 7 | |
| **75-221** | PLO619 | 5/8" x 44-5/16" | **Premium Belt** – Wheel<br>For 32"–61" mowers, cog belt | 6 | |
| **75-223** | PLO643 | 1/2" x 50-3/8" | **Premium Belt** – Mower Deck<br>For 28", 36", & 48" decks | 1 | |
| **15-290** | PLO648 | 21/32" X 30-7/16" | **Premium Belt** | 7 | |
| **15-291** | PLO661 | 21/32" X 56-15/16" | **Premium Belt** | 7 | |

# Belts

| OREGON | Replaces | Size | Description | Type | Product Code |
|---|---|---|---|---|---|
| **Bunton** | | | | | |
| **15-292** | PLO848 | 5/8" X 40" | **Premium Belt** | 7 | |
| **15-293** | PLO861 | 21/32" X 117-1/8" | **Premium Belt** | 7 | |
| **15-270** | PL1443 | 1/2" X 45-3/4" | **Premium Belt** | 7 | |
| **75-720** | PL4275 | 1-5/32" x 45-1/8" | **Premium Belt** – 2V Banded<br>For dual wheel drive on 36", 48", 52", & 61" cut mowers | 5 | |
| **15-271** | PL4511 | 21/32" X 54" | **Premium Belt** | 7 | |
| **15-272** | PL4513 | 21/32" X 57-5/16" | **Premium Belt** | 1 | |
| **15-274** | PL4732 | 5/8" X 63" | **Premium Belt** | 7 | |
| **15-275** | PL4733 | 21/32" X 56-13/16" | **Premium Belt** | 7 | |
| **15-276** | PL4734 | 1/2" X 95-15/16" | **Premium Belt** | 7 | |
| **15-277** | PL4739 | 5/8" X 64-7/8" | **Premium Belt** | 7 | |
| **15-278** | PL4740 | 1/2" X 102-1/16" | **Premium Belt** | 7 | |
| **15-279** | PL4811 | 5/8" X 63-3/8" | **Premium Belt** | 7 | |
| **15-280** | PL4813 | 1/2" X 47-1/16" | **Premium Belt** | 7 | |
| **15-281** | PL5039 | 21/32" X 40-3/8" | **Premium Belt** | 7 | |
| **15-282** | PL6011 | 21/32" X 44-5/16" | **Premium Belt** | 7 | |
| **15-283** | PL6062 | 21/32" X 70-15/16" | **Premium Belt** | 7 | |
| **15-286** | PL7332 | 21/32" X 122-13/16" | **Premium Belt** | 7 | |
| **15-287** | PL7436 | 21/32" X 123-5/16" | **Premium Belt** | 2 | |
| **15-288** | PL8519 | 21/32" X 131-3/4" | **Premium Belt** | 7 | |
| **15-294** | PM221 | 21/32" X 58-1/8" | **Premium Belt** | 7 | |
| **15-269** | 128110 | 21/32" X 111-3/8" | **Premium Belt** – Deck Drive<br>Fits BZT2000 series, ZT200 series, Estate Pro, Z-Fastcat, Leo, Leo Plus, & others with 48" decks | 2 | |
| **75-207** | 218134 | 5/8" x 101-5/16" | **Premium Belt** – Mower Deck<br>For 61" ZTR rider | 1 | |
| **Bush Hog** | | | | | |
| **15-296** | 65482 | 21/32" X 46-1/2" | **Premium Belt** – Blade Drive<br>Fits GT42 models | 7 | |
| **15-297** | 66474 | 21/32" X 133-13/16" | **Premium Belt** – Drive<br>Fits TM5 RM-2 rotary cutter SN 11-03985 & above | 1 | |

B

## Bush Hog

| OREGON | Replaces | Size | Description | Type | Product Code |
|---|---|---|---|---|---|
| **15-299** | 66552 | 21/32" X 70-1/8" | **Premium Belt**<br>Fits TM4 RM-2 rotary cutter SN 11-01234 & above | 2 | |
| **15-313** | 83120 | 1/2" X 69-3/8" | **Premium Belt** – Deck Drive<br>Fits Turf Hog TH60 models (set of 2) | 2 | |
| **15-314** | 83121 | 21/32" X 81-1/8" | **Premium Belt** – Deck Drive<br>Fits Turf Hog TH72 models (set of 2) | 2 | |
| **15-315** | 83136 | 7/8" X 101-3/8" | **Premium Belt** – Deck Drive<br>Fits BD 90 rotary cutter models (set of 2) | 2 | |
| **15-317** | 84302 | 21/32" X 120-3/4" | **Premium Belt** – Drive<br>Fits DM 7 disc mowers & GHM 700/800/900/1800/1900 model hay mowers (set of 2) | 2 | |
| **15-318** | 84303 | 21/32" X 121-1/8" | **Premium Belt** – Drive<br>Fits DM 8 disc mowers & GHM 700/800/900/1800/1900 model hay mowers (set of 2) | 2 | |
| **15-316** | 86326 | 1/2" X 64" | **Premium Belt** – Deck Drive<br>Fits Turf Hog TH48 models (set of 2) | 2 | |
| **115-203** | 88667 | 5/8" x 142" | **Belt** – Standard Belt for Deck Drive<br>Fits finish mowers RDTH60, TD-1500, ATH600, & FTH600 | | |
| **115-202** | 88843 | 5/8" x 155-1/2" | **Belt** – Standard Belt for Deck Drive<br>Fits finish mowers RDTH72, TD-1700, ATH720, & FTH720 | | |
| **15-302** | 90880 | 21/32" X 77-7/16" | **Premium Belt** – Deck Drive<br>Fits FTH 480 rotary cutters | 2 | |
| **15-303** | 93991 | 7/16" X 121-15/16" | **Premium Belt** – Deck Drive<br>Fits ZT-1800, ZT-1800W, ZT-2200, & ZT-2200W models with 60" decks | 7 | |
| **15-304** | 94144 | 1/2" X 106-3/4" | **Premium Belt** – Deck Drive<br>Fits ZT-1800, ZT-1800W, ZT-2200, & ZT-2200W models with 48" decks | 7 | |
| **15-305** | 94897 | 21/32" X 103-1/4" | **Premium Belt** – Lower Deck DriveAA<br>Fits MTH 720 & TMD17 rotary cutters | 4 | |
| **15-306** | 94898 | 21/32" X 160-3/8" | **Premium Belt** – Upper Deck Drive<br>Fits MTH 720 & TMD17 rotary cutters | 2 | |
| **15-307** | 94899 | 21/32" X 114-3/8" | **Premium Belt** – Lower Deck DriveAA<br>Fits MTH 600 & TMD15 rotary cutters | 4 | |
| **15-308** | 94900 | 21/32" X 148-1/2" | **Premium Belt** – Upper Deck Drive<br>Fits MTH 600 & TMD15 rotary cutters | 2 | |
| **15-309** | 96814 | 21/32" X 115-7/16" | **Premium Belt** – Deck Drive<br>For Zero Turn mowers with 48" decks | 1 | |
| **15-310** | 97315 | 9/16" X 132-3/8" | **Premium Belt** – Deck Drive<br>For Zero Turn mowers with 60" decks | 2 | |
| **15-295** | 50020136 | 21/32" X 123-15/16" | **Premium Belt** – Deck Drive<br>For Zero Turn mowers with 54" decks | 2 | |

# Belts

| OREGON | Replaces | Size | Description | Type | Product Code |
|---|---|---|---|---|---|
| **Case** | | | | | |
| **15-320** | C23359 | 1/2" X 70-15/16" | **Premium Belt** | 7 | |
| **Club Car** | | | | | |
| **15-321** | 1016203 | 21/32" X 37-13/16" | **Premium Belt** | 7 | |
| **15-322** | 101916701 | 3/8" X 34-3/16" | **Premium Belt** | 7 | |
| **Comet** | | | | | |
| **15-331** | 203590 | 3/4" X 28-3/8" | **Premium Belt** | 10 | |
| **15-333** | 203591 | 3/4" X 29-1/8" | **Premium Belt** | 10 | |
| **15-335** | 203593A<br>203593 | 3/4" X 31-1/8" | **Premium Belt** | 10 | |
| **15-337** | 203594 | 3/4" X 32-1/8" | **Premium Belt** | 10 | |
| **15-339** | 203597 | 3/4" X 34-7/8" | **Premium Belt** | 10 | |
| **Country Clipper** | | | | | |
| **15-350** | D3389 | 1/2" X 114-1/16" | **Premium Belt** | 7 | |
| **15-351** | D3644 | 1/2" X 114-1/4" | **Premium Belt** | 7 | |
| **15-352** | D3645 | 21/32" X 111-7/8" | **Premium Belt** | 1 | |
| **15-353** | D3664 | 1/2" X 114-1/16" | **Premium Belt** | 1 | |
| **15-354** | D3671 | 1/2" X 46-5/8" | **Premium Belt** | 7 | |
| **15-355** | D3724 | 1/2" X 130-1/16" | **Premium Belt** | 7 | |
| **15-356** | D3727<br>D3727-W | 1/2" X 147-1/16" | **Premium Belt** | 1 | |
| **15-357** | D3728 | 1/2" X 79-1/8" | **Premium Belt** | 7 | |
| **15-358** | D3733<br>D3733-W | 21/32" X 160-5/8" | **Premium Belt** | 7 | |
| **15-359** | D3754 | 1/2" X 63-3/8" | **Premium Belt** | 7 | |
| **15-360** | D3764-W | 1/2" X 181-5/8" | **Premium Belt** | 1 | |
| **15-361** | D3769 | 1/2" X 69-1/8" | **Premium Belt** | 7 | |
| **15-363** | D3777<br>D3777-W | 1/2" X 53" | **Premium Belt** | 1 | |
| **15-364** | D3778 | 21/32" X 117-7/8" | **Premium Belt** | 1 | |

## Cub Cadet

| OREGON | Replaces | Size | Description | Type | Product Code |
|---|---|---|---|---|---|
| **15-581** | 30779 | | **Premium Belt**<br>For WAM with 32" deck | | |
| **75-820** | 00050441P<br>50441 | 5/8" x 82-5/16" | **Premium Belt** – PTO Drive<br>For Z-Force 48" deck | 1 | |
| **15-583** | 01005378P<br>01005378<br>1005378 | 21/32" X 87-5/16" | **Premium Belt** – Deck Drive<br>For Tank models (2003–2011) | 1 | |
| **75-808** | 01000399 | 1/2" x 107-1/8" | **Premium Belt** – Deck Drive<br>For Z-Force 48" deck | 2 | |
| **75-818** | 01002391 | 5/8" x 62-15/16" | **Premium Belt** – PTO Drive<br>For Z-Force 44" deck | 2 | |
| **75-701** | 01004752<br>01002932 | 1/2" x 119-3/8" | **Premium Belt** – Deck Drive<br>For Z-Force 60" deck | 1 | |
| **75-821** | 01005011<br>01003968 | 5/8" x 83-1/4" | **Premium Belt** – PTO Drive<br>For Z-Force 50" deck | 1 | |
| **75-822** | 01005012<br>01004315 | 5/8" x 84-5/16" | **Premium Belt** – PTO Drive<br>For Z-Force 60" deck | 1 | |
| **15-106** | 01005374 | 1/2" x 105-1/4" | **Premium Belt** – Spindle Drive<br>Fits M48 Tank & RECON 48 mowers | 1 | |
| **15-107** | 01005375 | 1/2" x 114-1/4" | **Premium Belt** – Spindle Drive<br>Fits M54 Tank mowers | 1 | |
| **15-108** | 01005376 | 1/2" x 122" | **Premium Belt** – Spindle Drive<br>Fits M60 Tank & RECON 60 mowers | 1 | |
| **75-798** | 01008349 | 1/2" x 56-3/8" | **Premium Belt** – Traction Drive<br>For Z-Force mowers | 2 | |
| **15-109** | 01009787 | 5/8" x 80" | **Premium Belt** – Engine to Deck<br>Fits Enforcer 44, Enforcer 48, Z-Force 44, Z-Force 48, & Z-Force 54 | 1 | |
| **75-811** | 02000103 | 1/2" x 81-1/2" | **Premium Belt** – Spindle Drive<br>For deck drive, Z-Force with 44" deck | 1 | |
| **15-110** | 02000154 | 1/2" x 83-1/4" | **Premium Belt** – Spindle Drive<br>Fits Enforcer 48, Z-Force 48, & Z-Force 54 | 1 | |
| **15-111** | 02002648 | 1/2" x 58-1/4" | **Premium Belt** – Traction Drive<br>Fits Enforcer 44, Enforcer 48, Enforcer 50, Z-Force 44, Z-Force 48, Z-Force 50, & Z-Force 54 | 1 | |
| **15-589** | 954-0125<br>954-0125A<br>754-0125<br>754-0125A | 1/2" X 105-5/16" | **Premium Belt** – Lower Drive<br>For 42" 2-stage snow throwers | 2 | |

B

# Belts

## Cub Cadet

| OREGON | Replaces | Size | Description | Type | Product Code |
|---|---|---|---|---|---|
| **15-590** | 954-0142<br>754-0142<br>OEM-754-0142 | 3/8" X 31" | **Premium Belt** – Blade Drive<br>For lawn edgers (1982–2001) | 7 | |
| **15-593** | 954-0181<br>754-0181 | 1/2" X 100-1/16" | **Premium Belt** | 1 | |
| **15-594** | 954-0190<br>754-0190<br>1917354 | 1/2" X 39-3/16" | **Premium Belt** – Tine Drive<br>For front tine tiller | 1 | |
| **75-079** | 954-0197<br>754-0197 | 1/2" x 117-1/8" | **Premium Belt** – Deck Drive<br>Fits Gravely 14673P1 | 2 | |
| **15-595** | 954-0218<br>754-0218 | 9/16" X 58-7/8" | **Premium Belt** – Drive | 2 | |
| **15-598** | 954-0264<br>754-0264 | 1/2" X 52-3/8" | **Premium Belt** – Deck Drive<br>For riding mowers with 30" deck (1985–1996) | 1 | |
| **15-601** | 954-0325<br>754-0325 | 1/2" X 57-1/8" | **Premium Belt** – Drive<br>For rear tine tillers (1987–1992) | 1 | |
| **75-021** | 954-0349<br>754-0349 | 1/2" x 79-5/16" | **Premium Belt** – Cross Drive<br>For 46" side discharge, 600, 700, & 800 series (1987–2000) | 1 | |
| **175-021** | | | **Belt** – Standard Version of 75-021 | | |
| **75-999** | 754-0434<br>954-0434 | 1/2 x 58-1/4" | **Premium Belt** – Forward Drive<br>For model series 430, 440, & 450, rear tine tillers (1997 & newer) | 2 | |
| **15-616** | 954-0438<br>754-0438<br>OEM-754-0438 | 1/2" X 51" | **Premium Belt** | 2 | |
| **75-824** | 954-0461<br>754-0461 | 1/2" x 78-1/8" | **Premium Belt** – Traction Drive<br>Fits traction drive SLT 1550, SLT 1554, & LT1000 series, LT1024, 1A17420369, & newer | 2 | |
| **175-824** | | | **Belt** – Standard Version of 75-824 | | |
| **15-619** | 954-0483<br>754-0483<br>OEM-754-0483 | 3/8" X 38-1/8" | **Premium Belt** | 7 | |
| **75-823** | 954-0640<br>754-0640 | 1/2" x 79-3/8" | **Premium Belt** – Traction Drive<br>LT1018, LT1022, LT1024, & 10174H20368 & before | 2 | |
| **15-623** | 954-0641<br>754-0641 | 1/2" X 105" | **Premium Belt** – Deck Drive<br>For 38" decks | 1 | |
| **75-655** | 954-0644<br>754-0644 | 1/2" x 60-3/8" | **Premium Belt** – Deck<br>For 42" cut mowers | 1 | |
| **75-656** | 954-0645<br>754-0645<br>954-0645A<br>754-0645A | 1/2" x 67-1/4" | **Premium Belt** – Deck<br>For 42" cut mowers | 1 | |

## Cub Cadet

| OREGON | Replaces | Size | Description | Type | Product Code |
|---|---|---|---|---|---|
| **15-588** | 954-3001<br>754-3001 | 21/32" X 91-13/16" | **Premium Belt** – PTO to Deck<br>For garden tractors | 2 | |
| **15-625** | 954-3004<br>754-3004<br>IH-59701-C1 | 1/2" X 78" | **Premium Belt** – Deck Drive<br>For 44" decks | 1 | |
| **75-658** | 954-3038<br>754-3038 | 1/2" x 61-1/4" | **Premium Belt** – Deck Drive<br>For 1000 series, 38" cut mowers | 1 | |
| **115-207** | 954-3041<br>754-3041 | 1/2" x 105" | **Belt** – Deck Spindle Drive<br>For 46" & 48" mowers | | |
| **15-627** | 954-3045<br>754-3045 | 1/2" X 121-3/4" | **Premium Belt** – Deck Drive<br>For 54" decks | 2 | |
| **15-628** | 954-3048<br>754-3048 | 21/32" X 107-5/16" | **Premium Belt** – PTO to Deck<br>For garden tractors | 2 | |
| **15-629** | 954-3053<br>754-3053 | 1/2" X 104-7/16" | **Premium Belt** – Deck Drive<br>For 48" decks | 2 | |
| **75-134** | 954-3055A<br>754-3055A<br>754-0355 | 5/8" x 112-5/8" | **Premium Belt** – Deck Drive | 2 | |
| **75-812** | 954-3068<br>754-3068 | 11/16" x 111-1/8" | **Premium Belt** – Deck Drive<br>Fits 2000 series mowers with 46" & 48" cut | 2 | |
| **75-659** | 954-3073<br>754-3073 | 1/2" x 62-3/8" | **Premium Belt** – Deck<br>For 62"cut mowers | 2 | |
| **115-208** | 954-3084<br>754-3084 | 1/2" x 37-5/8" | **Belt** – Front PTO<br>Fits 3000 & GT3000 series tractors (set of 2) | | |
| **15-602** | 954-04003A<br>754-04003 | 3/8" X 32-15/16" | **Premium Belt** | 7 | |
| **15-603** | 954-04013<br>754-04013 | 3/8" X 21-1/2" | **Premium Belt** | 2 | |
| **15-604** | 954-04014<br>754-04014<br>OEM-754-04014 | 3/8" X 27" | **Premium Belt** – Alternator<br>For 4x4 utility vehicles | 7 | |
| **15-605** | 954-04047<br>754-04047 | 1/2" X 114-1/16" | **Premium Belt** – Deck Drive<br>For 54" decks (2009 & newer) | 1 | |
| **15-606** | 954-04055<br>754-04055 | 21/32" X 111-1/2" | **Premium Belt** – PTO to Deck<br>For garden tractors with 42", 50", & 54" stamped decks (2011–2015) | 1 | |
| **15-609** | 954-04100<br>754-04100 | 3/8" X 32-15/16" | **Premium Belt** | 7 | |

# Belts

## Cub Cadet

| OREGON | Replaces | Size | Description | Type | Product Code |
|---|---|---|---|---|---|
| **15-613** | 954-04207<br>754-04207<br>OCC-754-04207 | 1/2" X 79-3/8" | **Premium Belt** – Ground Drive<br>For lawn tractors (2009–2014) | 1 | |
| **75-706** | 954-04033<br>754-04033<br>754-04033A<br>954-04033A | 1/2" x 118-5/16" | **Premium Belt** – Deck Drive<br>Fits LT1022, LT1045, & LT1046 46" deck | 1 | |
| **175-706** | | | **Belt** – Standard Version of 75-706 | | |
| **15-013** | 954-04041<br>754-04041 | 5/8" x 111-5/16" | **Premium Belt** – PTO<br>Fits GT2542 (2008 & before), GT2186-44, GT2186-48, GT2521-48, GT2544, LT2042, LT2138, & LT2180 with 42" deck | 1 | |
| **75-886** | 954-04043<br>754-04043<br>954-04043B<br>954-04043A<br>754-04043A<br>754-04043B | 1/2" x 58-1/8" | **Premium Belt** – Traction Drive<br>Fits RZT42, RZT17 42" deck, RZT22, & RTZ50 50" deck | 1 | |
| **75-710** | 954-04044<br>754-04044<br>954-04044A<br>754-04044A | 1/2" x 134" | **Premium Belt** – Deck Drive<br>Fits RZT22 & RZT50 50" deck | 1 | |
| **175-710** | | | **Belt** – Standard Version of 75-710 | | |
| **75-714** | 954-04045<br>754-04045 | 1/2" x 109-1/4" | **Premium Belt** – Deck Drive<br>Fits LT1042, RZT17, & RZT42 42" deck | 1 | |
| **175-714** | | | **Belt** – Standard Version of 75-714 | | |
| **75-716** | 954-04048<br>754-04048 | 5/8" x 131-5/16" | **Premium Belt** – Deck Drive<br>Fits LT1024 50" deck | 1 | |
| **75-813** | 954-04060B<br>754-04060B<br>954-04060A<br>954-04060<br>754-04060<br>754-04060A | 1/2" x 96-5/8" | **Premium Belt** – Deck Drive<br>Fits LT1042 42" deck | 1 | |
| **175-813** | | | **Belt** – Standard Version of 75-813 | | |
| **75-600** | 754-04062<br>942-04062 | 1/2'' x 77-7/8'' | **Premium Belt** – Deck Drive<br>Fits 38" cut decks used on 700 series (2005 & newer) | | |
| **75-814** | 954-04077<br>754-04077 | 5/8" x 133-13/16" | **Premium Belt** – Deck Drive<br>Fits LT1050 & SLT1550 50" deck | 1 | |
| **175-814** | | | **Belt** – Standard Version of 75-814 | | |

B

| OREGON | Replaces | Size | Description | Type | Product Code |
|---|---|---|---|---|---|
| **Cub Cadet** | | | | | |
| **75-815** | 954-04118<br>754-04118 | 1/2" x 122-1/2" | **Premium Belt** – Deck Drive<br>Fits LT1045 & LT1046 46" deck | 1 | |
| **175-815** | | | **Belt** – Standard Version of 75-815 | | |
| **15-025** | 954-04122<br>754-04122 | 1/2 x 90-1/4 | **Premium Belt** – Engine to Deck Drive<br>Fits 46" cut mowers, models 13**6**H*** (2006–2009) | 1 | |
| **15-112** | 954-04138A | 5/8" x 143" | **Premium Belt** – Deck Drive<br>Fits RZT54 | 1 | |
| **15-026** | 954-04142<br>754-04142 | 1/2" x 91-1/2" | **Premium Belt** – Engine to Deck Drive<br>Fits 46" cut mowers, models 13**7**H*** (2007–2009) | 1 | |
| **75-816** | 954-04153<br>754-04153<br>754-04153A<br>954-04153A | 1/2" x 122-1/8" | **Premium Belt** – Deck Drive<br>Fits LT1045 & LT1046, 46" deck | 1 | |
| **15-027** | 954-04219<br>754-04219 | 1/2" x 103" | **Premium Belt** – Mower Deck Drive<br>Fits 46" cut mowers (2-blade deck), models 13**7**T*** & 13**9**T*** (2010–2011), Craftsman models 247.288851, 247.28886, 247.28881, & 247.28880 | 1 | |
| **15-028** | 954-04240<br>754-04240 | 1/2 x 162 | **Premium Belt** – Mower Deck Drive<br>Fits 50" cut mowers, models 13**9**P*** (2010) & Craftsman model 247.289810 | 1 | |
| **Dixie Chopper** | | | | | |
| **15-366** | 20256<br>2006B38R | 21/32" X 41-1/4" | **Premium Belt** – Hydro Drive<br>For Magnum, Sidewinder, LX2000 series, X2000 series, XF2000 series, XW2000 series, XXG5000 series, XXW4000 series, & XXWD5000 series mowers | 7 | |
| **15-368** | 2006B130R<br>9907B130 | 9/16" X 132-3/8" | **Premium Belt** | 7 | |
| **15-367** | 97346C158 | 7/8" X 162" | **Premium Belt** | 7 | |
| **75-283** | 30203 | 5/8" x 104-3/4" | **Premium Belt** – Deck<br>For 50" cut | 2 | |
| **75-208** | 30204 | 5/8" x 81-1/16" | **Premium Belt** – Engine to Deck<br>For 50" cut | 2 | |
| **75-211** | 30236-0 | 5/8" x 128-5/16" | **Premium Belt** – Deck<br>For 60" cut | 2 | |
| **75-199** | 65080 | 5/8" x 82-1/8" | **Premium Belt** – Engine to Blade<br>For Flatlander 50" & 60" deck | 1 | |
| **75-661** | 9907B84 | 5/8" x 87-1/8" | **Premium Belt**<br>For engine to deck | 2 | |

# Belts

| OREGON | Replaces | Size | Description | Type | Product Code |
|---|---|---|---|---|---|
| **Dixon** | | | | | |
| **15-386** | 6111<br>539116200 | 21/32" X 78-3/16" | **Premium Belt** – PTO to Deck<br>For many models | 2 | |
| **15-374** | 1684<br>539124267 | 1/2" X 43" | **Premium Belt** – Ground Drive<br>For many cone drive units | 2 | |
| **15-375** | 1714<br>539124279 | 1/2" X 52" | **Premium Belt** – Ground Drive<br>For many Hydro drive units | 2 | |
| **15-376** | 1860<br>539124328 | 1/2" X 57-1/8" | **Premium Belt** – Blower Drive<br>For blower/bagger units used on 44" Ram & Speed ZTR models | 2 | |
| **15-388** | 7725<br>539116685 | 21/32" X 72-1/2" | **Premium Belt** – Deck Drive<br>Fits Zeeter models with 30" Decks & ZTR models with 30" & 42" decks | 1 | |
| **15-369** | 11305<br>539118156 | 21/32" X 145-3/8" | **Premium Belt** – Deck Drive<br>Fits Speed & Black Bear ZTR 44 models | 1 | |
| **15-370** | 12033<br>539118766 | 21/32" X 139-1/8" | **Premium Belt** – Deck Drive<br>Fits Silver Tip & ZTR models with 72" decks | 1 | |
| **15-371** | 12172<br>539126934 | 21/32" X 144-7/8" | **Premium Belt** – Deck Drive<br>Fits ZTR 8025 models | 2 | |
| **15-373** | 1300A<br>539115238 | 21/32" X 100-1/4" | **Premium Belt** – Deck Drive<br>Fits Grissly, Kodiak, Ram, & ZTR models with 50" decks | 2 | |
| **15-372** | 539124279 | 1/2" X 52" | **Premium Belt** | 2 | |
| **Dynamark - See Noma** | | | | | |
| **E-Z Roll** | | | | | |
| **75-101** | S335 | 1/2" x 30-1/4" | **Premium Belt**<br>For edgers | 1 | |
| **Encore** | | | | | |
| **75-260** | 363211 | 1-1/8" x 52-1/4" | **Premium Belt** – Wheel | 5 | |
| **75-956** | 363212 | 1/2" x 39-1/4" | **Premium Belt** – Transmission | 1 | |
| **75-955** | 363312 | 1/2" x 51-1/4" | **Premium Belt** – Transmission<br>For 36", 48", & 60" cut, set of 2 belts | 8 | |
| **15-389** | 423018 | 21/32" X 145-9/16" | **Premium Belt** | 7 | |
| **75-031** | 483030 | 5/8" x 88-1/4" | **Premium Belt** – Engine to Blade<br>For 48" models | 1 | |
| **15-390** | 483053 | 21/32" X 160-1/4" | **Premium Belt** | 2 | |
| **15-394** | 523349 | 21/32" X 134-1/8" | **Premium Belt** | 1 | |
| **15-395** | 523366 | 21/32" X 54-5/8" | **Premium Belt** | 7 | |

| OREGON | Replaces | Size | Description | Type | Product Code |
|---|---|---|---|---|---|
| **Excel (Hustler)** | | | | | |
| **75-662** | 781310 | 5/8" x 178" | **Premium Belt** – Deck<br>For Super Z, 60" cut mowers | 1 | |
| **75-663** | 781443 | 1/2" x 62-3/8" | **Premium Belt**<br>For Super Z hydro pump | 1 | |
| **75-664** | 782292 | 5/8" x 165-1/16" | **Premium Belt** – Deck<br>For Super Z, 52" cut mowers | 1 | |
| **75-665** | 784207 | 5/8" x 194-1/2" | **Premium Belt** – Deck<br>For Super Z, 72" cut mowers | 1 | |
| **15-017** | 784249 | 5/8''X 146-1/8'' | **Premium Belt** – Deck Drive<br>For Hustler FasTrak with 52" deck | 1 | |
| **15-018** | 784322 | 5/8''X 138-1/2'' | **Premium Belt** – Deck Drive<br>For Hustler FasTrak with 44" deck | 1 | |
| **75-755** | 789388 | 5/8" x 151-1/8" | **Premium Belt** – Deck Belt (wrapped)<br>Fits FasTrak 54 & Mini Z 52 | 1 | |
| **75-756** | 791335 | 5/8" x 143-1/4" | **Premium Belt** – Deck (wrapped)<br>Fits FasTrak 48, Mini Z 44, & Super Mini Z 44 | 1 | |
| **75-757** | 793828 | 1/2" x 116-5/16" | **Premium Belt** – Deck (wrapped)<br>Fits FasTrak 36 | 1 | |
| **75-759** | 793893 | 1/2" x 127-1/2" | **Premium Belt** – Deck (wrapped)<br>Fits FasTrak 42 | 1 | |
| **15-019** | 797720 | 5/8" x 177" | **Premium Belt** – Deck Drive<br>Fits Hustler ATZ, XR7, & Super XR7 with 60" deck | 1 | |
| **Exmark** | | | | | |
| **75-509** | 109-7299 | 3/8" x 36" | **Premium Belt** – Lawn Mower Drive - NEW<br>Fits Exmark ECXKA21 commercial 21 | 8 | |
| **75-510** | 103-4244 | 9/32" x 45/64" | **Premium Belt** – V - NEW<br>Fits Exmark NAV20KC and NAV27KC models | 3 | |
| **75-513** | 126-6626 | 21/32" x 13/32" | **Premium Belt** – V - NEW<br>Fits Exmark RAE708GEM48300,<br>RAS710CKC48300, RAX651GKA484A3 | 1 | |
| **15-404** | 323344<br>1-323344 | 21/32" X 49-1/16" | **Premium Belt** – Wheel Drive<br>For Metro 5-speed mowers | 7 | |
| **15-405** | 323734<br>1-323734 | 21/32" X 81-5/16" | **Premium Belt** – Deck Drive<br>For Metro 5-speed mowers with 32" decks | 1 | |
| **15-401** | 1323735<br>1-323735<br>323735 | 21/32" X 83-13/16" | **Premium Belt** – Deck Drive<br>For Viking Hydro with 36"decks | 1 | |
| **15-408** | 403024<br>1-403024 | 21/32" X 94-1/16" | **Premium Belt** – Deck Drive<br>For Viking with 48"decks | 2 | |

# Belts

## Exmark

| OREGON | Replaces | Size | Description | Type | Product Code |
|---|---|---|---|---|---|
| **15-409** | 403025<br>1-403025 | 5/8" X 52-1/16" | **Premium Belt** – Deck Drive<br>For Metro mowers with 48" decks | 7 | |
| **15-410** | 403088<br>1-403088 | 21/32" X 94-3/4" | **Premium Belt** – Deck Drive<br>For Viking with 48"decks (1994–1997) | 7 | |
| **15-411** | 403105<br>1-403105 | 21/32" X 55-9/16" | **Premium Belt** – Deck Drive<br>For Metro & Viking mowers with 52" decks | 7 | |
| **15-412** | 523175<br>1-523175 | 1/2" X 134-3/8" | **Premium Belt** – Deck Drive<br>For Explorer with 60" decks | 7 | |
| **15-413** | 543028<br>1-543028 | 21/32" X 89-5/16" | **Premium Belt** – Deck Drive<br>For Turf Ranger with 52" decks (1993–1995) | 1 | |
| **15-415** | 543523<br>1-543523 | 21/32" X 88-13/16" | **Premium Belt** – Deck Drive<br>For Turf Ranger with 60" decks (1997–2005) | 1 | |
| **15-416** | 543548<br>1-543548 | 1/2" X 36-5/8" | **Premium Belt** – Ground Drive<br>For Turf Ranger (1991–2005) | 7 | |
| **15-417** | 543749<br>1-543749 | 21/32" X 90-3/8" | **Premium Belt** – Deck Drive<br>For Turf Ranger with 52" decks (1996–2005) | 1 | |
| **15-418** | 603193<br>1-603193 | 1/2" X 93" | **Premium Belt** – Wheel Drive<br>For Turf Tracer 5-speed mowers | 7 | |
| **15-419** | 603295<br>1-603295 | 5/8" X 40-9/16" | **Premium Belt** – Transmission Drive<br>For Turf Tracer 5-speed mowers | 7 | |
| **15-420** | 603576<br>1-603576 | 1/2" X 101-1/4" | **Premium Belt** – Deck Drive<br>For Turf Ranger with 52" decks (1995–2001) | 7 | |
| **15-421** | 603582<br>1-603582 | 21/32" X 84-5/16" | **Premium Belt** – PTO to Deck Drive<br>For Turf Tracer mowers with 52" decks | 1 | |
| **15-424** | 633162<br>1-633162 | 3/4" X 58-1/4" | **Premium Belt** – Pump Drive<br>For Lazer Z mowers (1995–1997) | 9 | |
| **15-425** | 633853<br>1-633853 | 7/16" X 25-5/8" | **Premium Belt** – Alternator Drive<br>For water-cooled Lazer Z mowers (1999–2001) | 7 | |
| **15-426** | 653332<br>1-653332 | 1/2" X 37-1/2" | **Premium Belt** – Blower Drive<br>For Ultra Vacs (44") | 1 | |
| **75-240** | 303078<br>1-303078 | 5/8" x 35-1/4" | **Premium Belt** – Engine to Transmission<br>For variable speed 32", 36", & 48" cut | 2 | |
| **75-221** | 303079<br>323051<br>1-303079 | 5/8" x 44-5/16" | **Premium Belt** – Wheel Drive<br>For all models with 32", 36", & 48" cut | 6 | |
| **75-031** | 303080<br>1-303080 | 5/8" x 88-1/4" | **Premium Belt** – Main<br>For 36" front cut variable speed & old style variable speed engine to blade | 1 | |
| **75-181** | 303499<br>1-303499 | 5/8" x 90-1/8" | **Premium Belt** – Blade Drive<br>Fits 48" cut, Viking Hydrostatic | 2 | |

B

## Exmark

| OREGON | Replaces | Size | Description | Type | Product Code |
|---|---|---|---|---|---|
| **75-226** | 323200<br>1-323200 | 5/8" x 84-3/16" | **Premium Belt** – Blade<br>Fits 36" cut, Viking Hydrostatic | 2 | |
| **75-227** | 323225<br>1-323225 | 5/8" x 52-1/16" | **Premium Belt** – Transmission Drive<br>Fits Viking Hydrostatic | 2 | |
| **75-177** | 323288<br>1-323288 | 1-1/8" x 49-5/8" | **Premium Belt** – Dual Wheel Drive<br>Fits 36", 48", & 52" Metro models | 5 | |
| **75-113** | 323300<br>1-323300<br>1-323300<br>1-543224<br>543224 | 5/8" x 87-1/4" | **Premium Belt** – Deck<br>Fits 48" Metro models | 1 | |
| **75-963** | 403174<br>1-403174 | 5/8" x 115-5/16" | **Premium Belt** – Deck<br>Fits 48" deck on Metro gear & single belt drive above serial number 220,000 | 1 | |
| **75-230** | 413093<br>1-413093 | 5/8" x 137-1/8" | **Premium Belt** – Deck Drive<br>Fits 48" cut Turf Tracer, deck belt for 44" Lazer Z | 1 | |
| **75-292** | 413094<br>1-413094 | 5/8" x 104-1-16" | **Premium Belt** – Blade Drive<br>For floating deck on 36" mid-range units | 2 | |
| **75-231** | 413096<br>1-413096 | 5/8" x 35-2/16" | **Premium Belt** – Blade Clutch<br>Fits Turf Tracer | 2 | |
| **75-232** | 413308<br>1-413308 | 5/8" x 143-1/8" | **Premium Belt** – Deck Drive<br>Fits 52" Turf Tracer | 2 | |
| **75-114** | 603045<br>1-603045 | 1/2" x 112-3/8" | **Premium Belt** – Deck<br>Fits 60" mower on Turf Tracer | 1 | |
| **75-178** | 603306<br>1-603306 | 5/8" x 81-1/4" | **Premium Belt** – Engine to Deck<br>Fits all 60" Turf Tracers & 52" serial numbers 84,000 & above | 1 | |
| **75-186** | 633127<br>1-633127 | 5/8" x 146-1/8" | **Premium Belt** – Blade Drive<br>Fits 60" side discharge on Lazer Z | 1 | |
| **75-188** | 633173<br>1-633173 | 5/8" x 111-1/4" | **Premium Belt** – Mule Drive<br>Fits Lazer Z | 1 | |
| **75-960** | 633366<br>1-633366 | 5/8" x 128-13/16" | **Premium Belt** – Deck<br>Fits 52" deck on Lazer Z liquid cooled & standard Lazer Z series | 1 | |
| **75-967** | 643052<br>1-643052<br>109-0776 | 5/8" x 169-1/2" | **Premium Belt** – Deck<br>Fits 72" on Lazer Z, XP Series, & standard Lazer Z series | 1 | |
| **75-961** | 653368<br>1-653368 | 5/8" x 154-3/4" | **Premium Belt** – Deck<br>Fits 52" deck on Lazer Z, HP series | 1 | |
| **75-234** | 633569<br>1-633569 | 5-rib x 57-1/4" | **Premium Belt** – Hydro Pump Drive<br>Fits Lazer Z, 5-rib | 3 | |
| **75-235** | 653163<br>1-653163<br>103-4760 | 1/2" x 53-1/4" | **Premium Belt** – Hydro Pump Drive<br>Fits Lazer Z | 1 | |

B

# Belts

## Exmark

| OREGON | Replaces | Size | Description | Type | Product Code |
|---|---|---|---|---|---|
| **75-917** | 653416<br>1-653416<br>103-5589 | 1/2" x 51-3/8" | **Premium Belt** – Pump Drive<br>Fits 52" Lazer HP | 1 | |
| **75-236** | 653438<br>1-653438 | 1/2" x 39-5/8" | **Premium Belt** – Blower<br>For 52" | 1 | |
| **15-398** | 103-5598 | 21/32" X 26" | **Premium Belt** – Fan Pump Drive<br>For water-cooled Lazer Z mowers (2004–2005) | 9 | |
| **75-514** | 109-9023 | 5/8" x 219 1/4" | **Premium Belt** – Deck Belt – NEW<br>Exmark Next Lazer Z and Lazer Z AS with 72" deck | 1 | |
| **75-516** | 116-3111 | 5/8" x 157-3/4" | **Premium Belt** – Deck – NEW<br>Exmark Vantage stand-on mowers with 52" deck | 1 | |
| **15-399** | 103-6906<br>103-6906-S | 9/16" X 47-5/8" | **Premium Belt** – Pump Drive<br>For Lazer Z mowers (2005–2007) | 9 | |
| **75-515** | 126-2538 | 5/8" x 163 1/2" | **Premium Belt** – Deck – NEW<br>Exmark Turf Tracer X series walk behinds with 52" deck (2015–2016) | 1 | |
| **15-427** | 116-7437<br>116-6893<br>1-653333<br>653333 | 1/2" X 38-1/2" | **Premium Belt** – Blower Drive<br>For Ultra Vacs (48") | 1 | |
| **115-704** | 126-2538 | 5/8" - 163 1/2 | **Premium Belt** – Deck – NEW<br>Exmark 52" Turf Tracer, X-Series | | |
| **75-957** | 103-0881 | 1/2" x 120-1/4" | **Premium Belt** – Mule Drive<br>Fits Lazer Z & XP series with 60" & 72" deck | 1 | |
| **15-113** | 103-2240 | 5/8" x 83-3/4" | **Premium Belt** – Deck Drive<br>Fits some Turf Tracer 52" | 1 | |
| **115-204** | 103-4014 | 5/8" x 116-3/16" | **Belt** – Mule Drive<br>Fits Lazer Z (S/N 370, 000–439, 999), Lazer AS (S/N 720, 000 & up), Lazer AC (S/N 440, 000 & up), & Lazer LC (S/N 440, 000–599, 999) | | |
| **75-667** | 103-4760<br>653163<br>1-653163 | 1/2" x 52-7/16" | **Premium Belt** – Hydro Pump<br>Fits Lazer Z with 44" & 48" decks | 6 | |
| **15-114** | 103-4761 | 1/2" x 53" | **Premium Belt** – Pump Drive<br>Fits some Lazer Z HP (2004–2007) | 6 | |
| **15-004** | 103-6506 | 5/8" x 118-5/16'' | **Premium Belt** – PTO<br>Fits Lazer Z XS (S/N 440, 000 & up) | 1 | |
| **15-115** | 109-4994 | 5/8" x 186" | **Premium Belt** – Deck Drive<br>Fits some Lazer Z -E 52" & Next Lazer Z 52" | 1 | |
| **15-005** | 109-5364 | 1/2'' x 146-1/4'' | **Premium Belt** – Deck<br>Fits Quest 48" deck (S/N 670, 000 & up) | 1 | |

| OREGON | Replaces | Size | Description | Type | Product Code |
|---|---|---|---|---|---|
| **Exmark** | | | | | |
| **15-116** | 109-8070 | 5/8" x 176" | **Premium Belt** – Deck Drive<br>Fits some Lazer Z-E 48" & Next Lazer Z 48" | 1 | |
| **15-117** | 109-8073 | 5/8" x 199" | **Premium Belt** – Deck Drive<br>Fits some Lazer Z-E 60" & Next Lazer Z 60" | 1 | |
| **15-118** | 116-1953 | 1/2" x 73" | **Premium Belt** – Hydro Drive<br>Fits some Lazer Z- E & Next Lazer Z | 1 | |
| **15-119** | 116-3455 | 1/2" x 153-3/4" | **Premium Belt** – Deck Drive<br>Fits some Pioneer-S 48" & Quest-SP Z 48" | 1 | |
| **115-705** | 126-2539 | 5/8" - 173 3/4" | **Premium Belt** – Deck – NEW<br>Fits Exmark 60" Turf Tracer, X-Series | | |
| **115-706** | 126-0783 | 5/8" - 136 1/3" | **Premium Belt** – Deck – NEW<br>Fits Exmark 48" Turf Tracer, S-Series | | |
| **EZ-GO** | | | | | |
| **15-428** | 14153G1 | 1-3/16" X 44-15/16" | **Premium Belt** | 7 | |
| **15-429** | 16548G1 | 7/16" X 35-5/8" | **Premium Belt** | 7 | |
| **15-430** | 26414G01 | 7/16" X 35" | **Premium Belt** | 7 | |
| **15-431** | 27077G02 | 1-3/16" X 40-3/4" | **Premium Belt** | 7 | |
| **15-432** | 72054G01 | 1-3/16" X 41-13/16" | **Premium Belt** | 7 | |
| **Ferris** | | | | | |
| **15-435** | 20824<br>502824 | 21/32" X 132-7/8" | **Premium Belt** – Deck Drive<br>For mowers with 61" deck | 4 | |
| **15-434** | 20873<br>5020873 | 21/32" X 115-3/4" | **Premium Belt** – Deck Drive<br>For mowers with 48" deck | 4 | |
| **15-436** | 21063<br>5021063 | 21/32" X 91-5/8" | **Premium Belt** – PTO to Deck<br>For mowers with 61" deck | 2 | |
| **15-437** | 21261<br>5021261 | 21/32" X 54-5/16" | **Premium Belt** – PTO to Deck<br>For mowers with 48" deck | 2 | |
| **75-946** | 21297 | 5/8" x 118-7/8" | **Premium Belt** – Deck Drive<br>Fits Hydrowalk DDS with 61" deck | | |
| **15-438** | 21684<br>5021684 | 5/8" X 38-15/16" | **Premium Belt** – Mule Drive<br>For mowers with 22HP to 27HP Kohler engines | 7 | |
| **15-440** | 22062<br>5022062 | 3/4" X 106-11/16" | **Premium Belt** – Mule Drive<br>For IS Z Series, S/N: 2269 & above | 5 | |
| **75-943** | 22061 | 5/8" x 175-13/16" | **Premium Belt** – Deck Drive<br>Fits IS3000Z with 61" deck | 1 | |

# Belts

| OREGON | Replaces | Size | Description | Type | Product Code |
|---|---|---|---|---|---|
| **Ferris** | | | | | |
| **75-944** | 22148 | 5/8" x 150-9/16" | **Premium Belt** – Deck Drive<br>Fits IS1000Z with 52" deck | 1 | |
| **75-945** | 22667 | 5/8" x 139-7/16" | **Premium Belt** – Deck Drive<br>Fits IS1000Z with 48" deck | 1 | |
| **75-954** | 22314 | 1/2" x 65-1/4" | **Premium Belt** – Transmission Drive<br>Fits IS1000Z, IS3000Z, & IS4000Z, set of 2 | 1 | |
| **15-120** | 5022173 | 1/2" x 66-3/8" | **Premium Belt** – Pump Drive<br>Fits some wide area walk-behind models | 1 | |
| **15-121** | 5102035 | 5/8" x 106-3/16" | **Premium Belt** – Spindle Drive<br>Fits Evolution 52" cut | 1 | |
| **15-122** | 5102040 | 5/8" x 112" | **Premium Belt** – Engine to Deck Drive<br>Fits Evolution 52" cut | 1 | |
| **Grasshopper** | | | | | |
| **15-443** | 381904 | 1/2" X 34-1/4" | **Premium Belt**<br>Fits models 1210, 1620, 1820, 1822, 718, 720, 721, 721D, 725, & 928D | 7 | |
| **75-144** | 381914 | 1/2" x 36-1/2" | **Premium Belt** – PTO<br>Fits rear engine 700 series | 6 | |
| **15-444** | 382025 | 9/16" X 54-3/8" | **Premium Belt**<br>Fits 9061 & 9561 mower attachments | 7 | |
| **15-123** | 382034 | 5/8" x 60-3/4" | **Premium Belt** – Hydro Drive<br>For some mid-mount mowers | 8 | |
| **15-445** | 382037 | 21/32" X 65" | **Premium Belt** – Deck Drive<br>For 52" decks | 7 | |
| **15-446** | 382049 | 21/32" X 82-1/8" | **Premium Belt**<br>Fits 6061 & 6261 mower attachments | 7 | |
| **15-124** | 382082 | 1/2" x 120-1/4" | **Premium Belt** – Deck Drive<br>Fits M152 deck | 1 | |
| **15-125** | 382084 | 5/8" x 136" | **Premium Belt** – Deck Drive<br>Fits 3452 & 9852 | 1 | |
| **15-126** | 382093 | 5/8" x 145-1/2" | **Premium Belt** – Hydro Drive<br>Fits 329B & 335B | 1 | |
| **75-669** | 382095 | 5/8" x 147-1/8" | **Premium Belt** – Mule drive | 1 | |
| **15-127** | 382097 | 5/8" x 153-3/4" | **Premium Belt** – Hydro Drive<br>Fits 428 diesel | 1 | |
| **15-128** | 382099 | 5/8" x 163" | **Premium Belt** – Hydro Drive<br>Fits 428D diesel | 1 | |
| **15-449** | 382777 | 1/2" X 41" | **Premium Belt**<br>Fits 9048 mower attachment (LH blade) | 7 | |

| OREGON | Replaces | Size | Description | Type | Product Code |
|---|---|---|---|---|---|
| **Grasshopper** | | | | | |
| **15-450** | 382800 | 5/8" X 51-15/16" | **Premium Belt**<br>Fits 9052 mower attachment | 7 | |
| **15-451** | 382836 | 21/32" X 62-7/16" | **Premium Belt**<br>Fits 9048 mower attachment (RH blade) | 7 | |
| **Gravely** | | | | | |
| **15-030** | 201010<br>2010100 | 5/8" x 80-5/16" | **Premium Belt** – Deck<br>Fits Pro-Stance models 1934FX with 34" deck, Pro-Walk models GR1336FX with 36" deck, & Everride Wasp with 36" deck | 1 | |
| **15-218** | 9240<br>009240<br>20035300 | 1/2" X 37-5/8" | **Premium Belt** – Deck Drive<br>For 40" decks | 7 | |
| **15-184** | 41545<br>041545<br>07220600 | 1/2" X 34-7/8" | **Premium Belt** – Ground Drive<br>For Pro Power units | 7 | |
| **15-185** | 41599<br>041599<br>07220700 | 1/2" X 90" | **Premium Belt** – Wheel Drive<br>For Pro Power units | 7 | |
| **15-151** | 049028<br>07222300 | 5/8" X 52-13/16" | **Premium Belt** – Wheel Drive<br>For many walk-behinds | 7 | |
| **15-220** | 49029<br>049029<br>07222400 | 1/2" X 46-7/8" | **Premium Belt** – Wheel Drive<br>For Pro 200 (set of 2) | 7 | |
| **15-187** | 49270<br>049270<br>07222700 | 1/2" X 40" | **Premium Belt** – Transmission Drive<br>For Pro 150 units | 7 | |
| **15-188** | 51213<br>051213<br>07219600 | 1/2" X 127-5/8" | **Premium Belt** – Deck Drive<br>For ZT models with 40"decks | 2 | |
| **15-200** | 72231<br>07223100<br>051141 | 1/2" X 58-7/8" | **Premium Belt** – Pump Drive<br>For Pro-Master 100 & Pro 300 series mowers | 7 | |
| **15-201** | 72238<br>07223800 | 1/2" X 38-13/16" | **Premium Belt** – Transmission Drive<br>For Pro 200 series units | 7 | |
| **15-202** | 72242<br>07224200 | 1/2" X 109-1/2" | **Premium Belt** – Deck Drive<br>For PM100Z series mowers with 50" decks | 7 | |
| **15-222** | 72258<br>07225800 | 1/2" X 53" | **Premium Belt** – Wheel Drive<br>For Pro 150 series mowers (set of 2) | 7 | |
| **15-205** | 72260<br>07226000 | 1/2" X 120" | **Premium Belt** – Deck Drive<br>For PM200 series mowers with 50" decks | 7 | |

# Belts

## Gravely

| OREGON | Replaces | Size | Description | Type | Product Code |
|---|---|---|---|---|---|
| **15-208** | 72345<br>07234500 | 1/2" X 50" | **Premium Belt** – PTO to Deck Drive<br>Fits ZT 2048 mowers | 1 | |
| **15-213** | 72382<br>07238200<br>07227700<br>07221500 | 1/2" X 85-5/16" | **Premium Belt** – Deck Drive<br>For Pro series mowers with 50" deck | 1 | |
| **15-152** | 07200026 | 21/32" X 121-7/8" | **Premium Belt** – PTO to Deck Drive<br>For PM & ZT series mowers with 52" side discharge decks | 4 | |
| **15-153** | 07200027 | 21/32" X 176-5/16" | **Premium Belt** – PTO to Deck Drive<br>Fits Pro-Master 200 series mowers with 52" rear discharge decks | 4 | |
| **15-154** | 07200028 | 21/32" X 131-13/16" | **Premium Belt** – PTO to Deck Drive<br>Fits Pro-Master 200 & ZT series mowers with 60" side discharge decks | 4 | |
| **15-155** | 07200030 | 21/32" X 185-3/4" | **Premium Belt** – PTO to Deck Drive<br>Fits Pro-Master 200 series mowers with 60" rear discharge decks | 4 | |
| **15-156** | 07200032 | 21/32" X 149-1/2" | **Premium Belt** – PTO to Deck Drive<br>For Pro-Master series mowers with 72" decks | 4 | |
| **15-157** | 07200039 | 5/8" X 78-7/8" | **Premium Belt** – Deck Spindle Drive<br>For Pro-Turn 400, Pro-Master 200, & Rapid XZ series mowers with 72" decks | 7 | |
| **15-158** | 07200116 | 1/2" X 98" | **Premium Belt** – Deck Drive<br>For Zoom & ZT series mowers with 34" deck | 1 | |
| **15-159** | 07200433 | 21/32" X 138-5/8-1/16" | **Premium Belt** – PTO to Deck Drive<br>For Pro-Master series mowers with 66" decks | 4 | |
| **15-203** | 07225000<br>072250<br>07221200 | 1/2" X 37-7/16" | **Premium Belt** – PTO Drive<br>For Pro 200 series mowers | 7 | |
| **15-164** | 07234600 | 21/32" X 134-7/8" | **Premium Belt** – PTO Drive<br>Fits PM310, PM250Z, PM260Z, & PM272Z mowers with 50" decks | 1 | |
| **15-165** | 07234900 | 5/8" X 50-9/16" | **Premium Belt** – Deck Drive<br>Fits PM310, PM250Z, PM260Z, & PM272Z mowers | 7 | |
| **15-167** | 07235100 | 21/32" X 142-7/8" | **Premium Belt** – PTO Drive<br>Fits PM310, PM250Z, PM260Z, & PM272Z mowers | 1 | |
| **15-210** | 07235500 | 1/2" X 73-7/8" | **Premium Belt** – Deck Drive<br>Fits PM250Z, PM260Z, & PM272Z mowers | 7 | |
| **15-169** | 07239200 | 1/2" X 67-3/4" | **Premium Belt** – Pump Drive<br>Fits PM models with hydraulic lift | 7 | |
| **15-170** | 07239300 | 21/32" X 126-7/8" | **Premium Belt** – PTO Drive<br>Fits PM models with 50" deck | 1 | |
| **15-171** | 07239400 | 21/32" X 149-7/8" | **Premium Belt** – PTO Drive<br>Fits PM models with 72" deck | 1 | |

B

| OREGON | Replaces | Size | Description | Type | Product Code |
|---|---|---|---|---|---|
| **Gravely** | | | | | |
| **15-173** | 07240700 | 21/32" X 123-3/8" | **Premium Belt** – PTO Drive<br>Fits models with 52" deck | 1 | |
| **15-174** | 07241300 | 21/32" X 131-5/8" | **Premium Belt** – PTO Drive<br>Fits models with 60" deck | 1 | |
| **15-215** | 7241500<br>07241500 | 1-3/8" X 151-3/4" | **Premium Belt** – Deck Drive<br>Fits ZT mowers with 48" decks | 1 | |
| **15-216** | 7241700<br>07241700 | 1/2" X 128-13/16" | **Premium Belt** – Deck Drive<br>Fits ZT mowers with 44" decks | 1 | |
| **15-217** | 7241800<br>07241800 | 1/2" X 121-3/8" | **Premium Belt** – Deck Drive<br>Fits ZT mowers with 40" decks | 1 | |
| **15-179** | 7242000 | 21/32" X 67-3/4" | **Premium Belt** – Pump Drive<br>Fits PM250Z, PM260Z, & PM272Z mowers & others | 5 | |
| **15-180** | 07242300 | 1/2" X 146-1/8" | **Premium Belt** – PTO Drive<br>Fits models with 60" deck | 1 | |
| **15-181** | 07242800 | 21/32" X 50-1/4" | **Premium Belt** – Pump Drive<br>Fits PM250Z, PM260Z, & PM272Z mowers & others | 5 | |
| **15-031** | 7200036<br>7200036 | 5/8" x 56-1/4" | **Premium Belt** – Deck<br>Fits models Rapid XZ 52, Pro-Master 152i, 152M, 152XDZ, 252H, 252HXDZ, 252M, & 252MXDZ, Pro-Turn 152, 252, & 452, & ZT 52HD & 2552HD with 52" decks | 6 | |
| **15-032** | 7200038<br>7200038 | 5/8" x 63-1/4" | **Premium Belt** – Deck<br>Fits models Rapid XZ60, Pro-Master 160i, 260H, 260HXDZ, 260M, & 260MXDZ, Pro-Turn 160, 260, & 460, & ZT 60HD, 2560HD, 2660, 2760, & 2760HD with 60" decks | 6 | |
| **115-200** | 7241600<br>7241600 | 1/2" x 142-3/4" | **Belt** – Standard Belt for Deck Drive<br>Fits many 52" ZT mowers | | |
| **15-033** | TCU18848 | 5/8" x 109-5/16" | **Premium Belt** – Deck<br>Fits Pro-Stance HR1952FX, 2352FL, & 2452FL, & Everride Wasp with 52" decks | 1 | |
| **Great Dane** | | | | | |
| **15-452** | D18004 | 1/2" X 62" | **Premium Belt** | 7 | |
| **15-453** | D18005 | 21/32" X 81-3/4" | **Premium Belt** | 7 | |
| **15-454** | D18006 | 21/32" X 55-3/8" | **Premium Belt** | 7 | |
| **15-455** | D18007 | 21/32" X 88-1/16" | **Premium Belt** | 7 | |
| **15-457** | D18087 | 21/32" X 77" | **Premium Belt** | 7 | |
| **15-458** | D18088 | 21/32" X 52-1/4" | **Premium Belt** | 7 | |
| **75-671** | D18303 | 1/2" x 68-5/8" | **Premium Belt** – Belt<br>Fits hydro pump on Super Surfer | 1 | |

# Belts

| OREGON | Replaces | Size | Description | Type | Product Code |
|---|---|---|---|---|---|
| **Great Dane** | | | | | |
| **75-670** | D18348 | 5/8" x 108-5/16" | **Premium Belt** – Engine to Deck<br>Fits Super Surfer 48" cut mowers | 1 | |
| **15-459** | D18361 | 21/32" X 134-3/4" | **Premium Belt** | 7 | |
| **75-242** | D28028 | 5/8" x 132-5/8" | **Premium Belt** – Blade to Blade<br>Fits 61" Chariot | 4 | |
| **75-243** | D28029 | 5/8" x 108-5/16" | **Premium Belt** – Blade Drive<br>Fits Chariot | 2 | |
| **15-460** | D28030 | 1/2" X 76-1/16" | **Premium Belt** | 7 | |
| **15-461** | D28031 | 21/32" X 119-1/2" | **Premium Belt** | 4 | |
| **15-462** | D28125 | 1/2" X 73-7/8" | **Premium Belt** | 7 | |
| **15-463** | D28241 | 5/8" X 102-1/16" | **Premium Belt** | 7 | |
| **15-464** | GDU10025 | 1/2" X 65" | **Premium Belt** – Pump Drive<br>Fits Great Dane Super Surfer (Series II) mower with 48", 52", or 61" decks | 7 | |
| **15-465** | GDU10228 | 21/32" X 168" | **Premium Belt** – Deck Drive<br>Fits Great Dane Chariot/Chariot LX mower with 61" decks | 1 | |
| **15-466** | TCU18847 | 21/32" X 98-11/16" | **Premium Belt** – Deck Drive<br>Fits Great Dane Super Surfer (Series II) mower with 48" decks | 1 | |
| **15-467** | TCU18849 | 21/32" X 127-1/16" | **Premium Belt** – Deck Drive<br>Fits Great Dane Super Surfer (Series II) mower with 61" decks | 1 | |
| **Honda** | | | | | |
| **75-501** | 22431-VG3-N01 | 35" - 3/8" | **Replacement Belt** – Blade Drive – NEW<br>Wrapped clutching | | |
| **Husqvarna** | | | | | |
| **15-472** | 110411<br>539110411 | 1/2" X 56" | **Premium Belt** | 1 | |
| **15-473** | 110832<br>539110832<br>510201101<br>917539110832 | 21/32" X 145-7/16" | **Premium Belt** – Deck Drive<br>For 42" decks | 1 | |
| **15-474** | 112529<br>539112529 | 21/32" X 175-1/8" | **Premium Belt** – Deck Drive<br>For 52" decks | 2 | |
| **15-477** | 0303352<br>513030352<br>506033033 | 5/16" X 34" | **Premium Belt** | 7 | |
| **75-724** | 372720<br>506372720<br>506347420 | 3/8" x 34-5/8" | **Premium Belt** – Cut-Off Saw<br>Fits models 371K (2003), 375K (2005), 371K, & 375K | 6 | |

B

## Husqvarna

| OREGON | Replaces | Size | Description | Type | Product Code |
|---|---|---|---|---|---|
| **75-108** | 532110883 | 1/2" x 98-1/2" | **Premium Belt** – Transmission<br>Fits model GT180 (1990–1992) | 1 | |
| **75-194** | 532110884 | 1/2" x 93-1/4" | **Premium Belt** – PTO<br>Fits model GT180 (1990–1992) | 1 | |
| **75-171** | 532125907 | 1/2" x 90-1/4" | **Premium Belt** – Transmission<br>Fits models 2354GXLS (2009), 2748GLS (2008), 2754GLS (2010–2013), CTH126 (2013), CTH19530 (2012), GT48XLS (2008), GTH2648 (2011), GHT263T (2012), GHT264T, GHT26V54 (2012–2013), GTH3052 (1990–1991), LT125 (2011), LTH1438 (2007–2008), LTH1538 (2011–2013), LTH126 (2011–2013), LTH19530 (1990), YT120, YT125 (2007–2009), YTH20K46 (2008), YTH2242 (2013), & YTH2042 | 1 | |
| **175-171** | | | **Belt** – Standard Version of 75-171 | 1 | |
| **75-106** | 532130969 | 1/2" x 92-1/4" | **Premium Belt** – Hydro Transmission<br>Fits models 2042LS (2008), 2146XLS, 2246LS, 2346XLS, 2348LS (2006), GTH26K54, GTH2654 (2009–2010), LGT2554 (2006–2013), LGT2654 (2011–2012), LGT24K54, LGT2554, LGT2654 (2012), LGTH22V48 (2010), LGTH2454, LTH18538 (2009), LTH2042 (2011), LTH151 (2010–2012), LTH152 (2012), LTH154 (2011–2012), LTH174, LTH1842, LTH18538 (2011–2013), LTH2038, LTH2142 (2012–2013), YT42XLS (2012), YT46LS (2012–2013), YT48XLS (2012), YT54LS (2006–2008), YTH1542XPT (2006), YTH1848XPT, YTH20B42T, YTH20F42T (2012), LT2217A, LT2323A2 (2010–2012), & LT2223A2 | 1 | |
| **175-106** | | | **Belt** – Standard Version of 75-106 | 1 | |
| **75-097** | 532131264 | 1/2" x 78-3/8" | **Premium Belt** – Deck<br>Fits models LR100 (1995), LR110 (1994), LR12, LR111 (1992–1996), LR120 (1996–1998), LR121 (1999–2000), LR122 (1991), LT100 (1992), LT112 (1996–1998), & LT125 | 1 | |
| **75-889** | 532132801 | 1/2" x 52-5/16" | **Premium Belt** – Transmission<br>Fits models 500HRTT (2003), 500RTT (2002–2004), 550CRTH (1998), 550CRTT (1999), 600CRT (2003), 650BRTT (2000), 650CRTA (2001), 650CRTB (2002), 650CRTC (2003–2008), 650RTT (2006–2009), 700DRT (2009), 700RTT (1997), CRT52 (1998), CRT53 (1997), CRT61 (2003), CRT650 (2009–2011), CRT900 (1999), CRTH550 (2011), CT2105R (2009–2012), DRT900 (2012), DRT70 (2009), RTT900 (2011), & TR430 | 1 | |
| **75-890** | 532133035 | 1/2" x 41-3/8" | **Premium Belt** – Forward Drive<br>Fits model FT900 (2009–2010) | 1 | |
| **75-195** | 532137153 | 1/2" x 83-1/4" | **Premium Belt** – Transmission<br>Fits models GT200 (1993–1997) & GT2254 (2005) | 1 | |
| **175-195** | | | **Belt** – Standard Version of 75-195 | 1 | |
| **75-167** | 532138255 | 1/2" x 95-1/4" | **Premium Belt** – Deck<br>Fits models CT126 (2011–2013), GT200 (1993–1994), LT126 (2011–2013), & SRD17530 | 1 | |

B

# Belts

## Husqvarna

| OREGON | Replaces | Size | Description | Type | Product Code |
|---|---|---|---|---|---|
| **75-169** | 532139573 | 1/2" x 84-1/8" | **Premium Belt** – Deck<br>Fits models GT200 (1993–1996), GTH200 (1994–1998), GTH220 (1995–1999), GTH2250 (2001–2002), GTH250 (1999–2001), GTH 2550 (2001), & YTH180 (1996–1999) | 2 | |
| **175-169** | | | **Belt** – Standard Version of 75-169 | 2 | |
| **75-196** | 532140218 | 1/2" x 84-3/16 | **Premium Belt** – Transmission<br>Fits models GTH200 (1994–1999), GTH220 (1995–1999), GTH2250 (2000–2001), GTH2448 (2006), GTH2454 (1999–2000) GTH250 (2001), GTH2550 (2006), GTH2654 (2009), LGT2554 (2006), LTH1538 (2006), YTH1542, YTH1848, YTH20B42, YHT2242, YHT2448, & YHT2454 | 1 | |
| **75-000** | 532140294 | 1/2" x 82-1/4" | **Premium Belt** – Hydro Transmission<br>Fits models LTH120 (1999–2000), LTH1342 (2000–2002), LTH140 (1994–1995), LTH1742 (2002–2003), LTH18542 (2003–2004), LTH2042 (2003–2004), LTH141 (2012–2013), YTH130 (2000–2001), YTH150 (1995–1999), YTH1542 (2000–2005), YTH1746 (2000–2002), YTH180 (1994–1999), YTH1842 (2002–2005), YTH1848 (2001–2005), YTH18542 (2004–2008), YTH2042 (2005), YTH2046 (2000–2001), YTH2048 (2001–2004), & YTH2148 | 1 | |
| **175-000** | 532140294 | | **Belt** – Standard Version of 75-000 | 1 | |
| **75-936** | 532144200<br>532131290 | 1/2" x 88-1/4" | **Premium Belt** – Deck<br>Fits models LR125 (1991–1992), LR12 (1996), LRH125 (1995), LT120 (1996–1998), LT1238 (2000–2002), LT125 (1995–1996), LT1538 (2002–2003), LTH120 (1997–2000), LTH125 (1996), LTH130 (1996–1999), LTH140 (1995), LTH145 (1996), YT150 (1996), YT190 (1995), YTH145 (1999), YTH150 (1995–1999), YT160 (1997), YTH180 (1994), & YTH190 (1995) | 2 | |
| **75-197** | 532144959 | 1/2" x95-3/8" | **Premium Belt** – Deck<br>Fits models 2042LS (2007–2008), GT200 (1995–1997), GTH200 (1995–1996), GTH220 (1995–1999), GTH2250 (2000–2001), GTH250 (1999–2000), GTH2550 (2001), LT18542 (2004–2006), LTH1342 (2000–2002), LTH1742 (2002–2003), LTH18542 (2003–2004), LTH2042 (2003–2004), LTH174 (2011–2012), LTH1842 (2011–2012), LTH2038 (2012), LTH2142 (2011–2013), YTH130 (2000–2001), YTH150 (1998), YTH1542 (2006–2008), YTH1746 (2000–2002), YTH180 (1995–1999), & YTH1842 (2003) | 1 | |
| **175-197** | | | **Belt** – Standard Version of 75-197 | 1 | |
| **75-170** | 532148763 | 5/8" x 85-1/2" | **Premium Belt** – Deck<br>Fits models GT200 (1995–1997), GTH200 (1999), GTH225, GTH2350 (2002), GTVH205 (1999–2000), YTH1746 (2000–2002), YTH180 (1995–1999), & YTH2046 (2000–2001) | 2 | |
| **175-170** | | | **Belt** – Standard Version of 75-170 | 2 | |
| **75-897** | 532165632 | 1/2" x 112-1/8" | **Premium Belt** – Hydro Transmission<br>Fits models CTH130 (1999) & CTH150 | 1 | |
| **75-911** | 532166060 | 3/8" x 38-1/4" | **Premium Belt** – Transmission<br>Fits models 6521RSA (2000) & 6521RSB (2001) | 2 | |

B

## Husqvarna

| OREGON | Replaces | Size | Description | Type | Product Code |
|---|---|---|---|---|---|
| **75-912** | 532174368 | 5/8" x 90-1/8" | **Premium Belt** – Deck<br>Fits models GTH2248 (2002–2003), GTH250 (2002), GTH2548 (2001–2005), YTH1848 (2001–2005), YTH2148 (2003–2005), YTH2448 (2004–2005), YTH2548 (2004), YTH2748, & YTKH1848 (2003–2004) | 1 | |
| **175-912** | 532174368 | | **Belt** – Standard Version of 75-912 | 1 | |
| **75-913** | 532174883 | 5/8" x 97-3/16" | **Premium Belt** – Deck<br>Fits models LTH1542 (2005), YTH1342 (2003), YTH1452 (2001), YTH1542 (2001–2005), YTH18542 (2004–2008), YTH2042 (2005), YTH2242 (2003), & YTKH1542 (2003–2004) | 2 | |
| **175-913** | 532174883 | | **Belt** – Standard Version of 75-913 | 2 | |
| **75-914** | 532175436 | 3/8" x 32-1/4" | **Premium Belt** – Transmission<br>Fits models 7021CH1 (2004) & 70021CH1 (2005) | 1 | |
| **15-029** | 532178138 | 1/2" x 87-5/8" | **Premium Belt** – Transmission<br>Fits models YTH2148 (2004) & YTH2448 (2005) | 1 | |
| **115-029** | | | **Belt** – Standard Version of 15-029 | 1 | |
| **75-654** | 532180808 | 5/8" x 88-3/4" | **Premium Belt** – Deck<br>Fits models GTH2248 (2002–2003), GTH250 (2002), GTH2548 (2002–2005), YTH1848 (2002–2005), YTH2148 (2003–2005), YTH2248 (2004), YTH2448 (2004–2005), YTH2748 (2004), & YTKH1848 (2003–2004) | 1 | |
| **175-654** | | | **Belt** – Standard Version of 75-654 | 1 | |
| **75-892** | 532193214 | 1/2" x 90-3/8" | **Premium Belt** – Deck<br>Fits models LT131 (2012–2013), LT141 (2011–2012), LTH141 (2012–2013), & SRD17530 (2010–2011) | 1 | |
| **115-205** | 532196103 | 5/8" x 147-3/4" | **Standard Belt** – Deck<br>Fits models 2354GXLS (2009), 2754GLS (2008–2009), GT54LS (2012), GTH2454 (2006), GTH2654, GTH26K54, GTH24K54 (2012), GTH264T, GTH26V54, GTH3052TF, LGT2554 (2009–2010), LGT2654 (2006–2013), LGT24K54 (2011–2012), LGT2554 (2012), LGT2654 (2011–2012), LGTH2454 (2010), LGTH26V54 (2012), YT54LS (2012), YTH24V54 (2010), YTH2454 (2006–2010), YTH25K54 (2010–2012), YTH26V54 (2010–2012), & YTH2754 (2011–2012) | 1 | |
| **15-020** | 532196857 | 3/8" x 32-3/4" | **Premium Belt** – Transmission<br>Fits model 62522SH (2005–2007), 62522SL, & XT722FE (2009–2012) | 1 | |
| **75-894** | 532197242 | 5/8" x 138-3/4" | **Premium Belt** – Deck<br>Fits models 2348LS (2008), 2748GLS, GTH2448 (2006), GTH2648 (2006–2008), YTH1848 (2006), YTH23V48 (2010), YTH2348 (2006–2010), YTH2448 (2006), YTH22K48 (2012), YTH2348 (2010–2012), YTH23K48 (2011), YTH23V48 (2010–2013), & YTH24K48 (2011–2012) | 2 | |
| **175-894** | | | **Belt** – Standard Version of 75-894 | 2 | |

B

# Belts

| OREGON | Replaces | Size | Description | Type | Product Code |
|---|---|---|---|---|---|
| **Husqvarna** | | | | | |
| **75-935** | 532419271<br>532126520 | 1/2" x 88-1/4" | **Premium Belt** – Transmission<br>Fits models CT126 (2010), LR12 (1994), LR121 (1996–1997), LR122 (1999–2000), LR125 (1992–1995), LRH125 (1994–1995), LT125 (1996–1998), LTH19530 (2011–2013), CT126 (2011–2013), CTH126 (2010–2013), CTH19530 (2012–2013), LTH126 (2011–2013), LTH19530 (2011–2013), & SRD17530 (2011–2012) | 1 | |
| **15-023** | 532429636 | 1/2" x 101-1/2" | **Premium Belt** – Deck<br>Fits models LT152 (2011), LT1942 (2012), LT2223A2 (2010), LTH152 (2010–2012), LTH174 (2011), LTH1842, LTH2142 (2013), YTA19K42 (2011–2012), YTH2042 (2009–2013), YTH22V42 (2011–2013), & YTH23V42 (2012–2013) | 1 | |
| **15-024** | 539110410 | 1/2" x 105-1/8" | **Premium Belt** – Deck<br>Fits models CZ4217 (2006), CZ42175, Z4217 (2004–2006), Z4218 (2004–2007), Z4219 (2007), Z4824, & Z5426 | 1 | |
| **75-269** | 539110859<br>539101956 | 1-1/8" x 45-1/2" | **Premium Belt** – Wheel Drive<br>Fits models W3212 (2000–2001), W3213, W3613, W3614, W4814, W4815, W3213 (2004–2008), W3613, W4815, WG3213, WG3613, & WG4815 | 5 | |
| **75-819** | 539111949<br>539103687 | 5/8" X 151-7/8" | **Premium Belt** – Deck<br>Fits models iZ4217 (2008), iZ5221, iZ5223, iZ6152, iZ4817 (2004–2007), iZ4818 (2004), iZ4819 (2005–2008), iZ4821 (2004–2008), TRD48 (2009), ZTHKH4818 (2000–2002), ZTHKH4820, ZTHKW4818, & ZTHKW4821 | 1 | |
| **15-129** | 539114557 | 5/8" x 154" | **Premium Belt** – Deck<br>Fits models LSZ4622 (2008), LSZ5422, LSZ5424, MZ5225 (2007), RZ4219 (2009), RZ4619, RZ4620, RZ5422, RZ5424, RZ5422 (2010–2013), RZ5424, RZ5426, & RZ54i | 1 | |
| **15-022** | 584453101<br>532405143 | 1/2" x 105-3/4" | **Premium Belt** – Deck<br>Fits models 2146XLS (2008), 2246LS, 2346XLS, YT46LS (2012), YTH20K46 (2006–2010), YTH21K46 (2009), YTH2146XP (2006–2008), YTH22V46 (2009–2010), YTH2246 (2009), YTH2246 (2006), YTH18K46 (2012), YTH20K46 (2011–2012), YTH2146 (2012–2013), YTH21K46 (2011–2012), YTH223 (2010), YTH224 (2012), YTH2246 (2011–2012), YTH22V46 (2012–2013), & YTH23K46 (2011–2012) | 1 | |
| **Hustler - See Excel** | | | | | |
| **John Deere** | | | | | |
| **15-511** | AM102190 | 1/2" X 43-5/16" | **Premium Belt** | 7 | |
| **75-976** | GC00073 | 3/8" x 39-1/16" | **Premium Belt** – Drive<br>Fits JS-61, 21" walk-behind mower | 1 | |

B

## John Deere

| OREGON | Replaces | Size | Description | Type | Product Code |
|---|---|---|---|---|---|
| **7F5-918** | GC00081 | 3/8" x 35-1/8" | **Premium Belt** – Transmission Drive<br>Fits JS63 series mowers | 8 | |
| **15-034** | GX10062 | 1/2" x 106-1/8" | **Premium Belt** – Traction Drive<br>Fits Sabre models 1438GS, 1438HS, 15.538GS, 15.538HS, 1542GS, 1542HS, 15.542HS, 1742GS, & 1742HS | 1 | |
| **75-979** | GX20006 | 1/2" x 88-5/8" | **Premium Belt** – Transmission Drive<br>Fits models 105, 115, 125, 135, 145, 155C, D110, D120, D130, D140, D150, D160, D170, L105, L107, L108, L110, L111, L118, L120, L130, LA110, LA115, LA120, LA125, LA130, LA135, LA140, LA145, LA150, LA155, LA160, LA165, & LA175 | 2 | |
| **75-919** | GX20072<br>GY20570 | 1/2" x 103-15/16" | **Premium Belt** – Mower Deck Drive<br>For L series mowers | 1 | |
| **175-919** | | | **Belt** – Standard Version of 75-919 | | |
| **75-992** | GX20305<br>GY20571 | 1/2" x 139-11/16" | **Premium Belt** – Deck drive<br>For 48" cut, new L series mowers | 2 | |
| **175-992** | | | **Belt** – Standard Version of 75-992 | | |
| **75-799** | GX21395 | 5/8" x 161-9/16" | **Premium Belt** – Deck Drive<br>Fits 190C, D170, G110, LA150, & LA175 | 1 | |
| **75-800** | GX21833 | 1/2" x 141-3/8" | **Premium Belt** – Deck Drive<br>Fits D140, D150, D160, L120, L130, LA130, LA140, LA145, LA155, LA165, X140, & X165 models | 2 | |
| **75-978** | GX22036<br>GX20241 | 1/2" x 92-3/8" | **Premium Belt** – Transmission Drive<br>For L-100 series lawn tractor | 1 | |
| **75-806** | GX22036 | 1/2" x 92-5/16" | **Premium Belt** – Traction drive<br>Fits 102, D100, L100, & LA100<br>Set of 2 | 1 | |
| **15-483** | GY20572 | 9/16" X 65-1/4" | **Premium Belt** | 7 | |
| **15-485** | M117608 | 9/16" X 60-1/16" | **Premium Belt** – Primary Deck Drive<br>Fits models 240, 245, 260, 285, 320, 325, 335, 345, 355, GT225, GT235, GT242, GT262, GT275, LX255, LX266, LX277, LX279, LX288, & others | 7 | |
| **15-486** | M119872 | 1/2" X 93-3/4" | **Premium Belt** – Primary Deck Drive<br>Fits models 240, 245, 260, 265, 285, 320 with 48" decks | 7 | |
| **15-487** | M125383 | 1-1/4" X 56-3/4" | **Premium Belt** – Torque Converter Drive<br>Fits 6X4 & Diesel Gators | 7 | |
| **15-488** | M136927 | 1/2" X 108-1/16" | **Premium Belt** – Hydro Transmission Drive<br>Fits model G100 Sabre, 1842GV, 1842HV, 1848GV, 1848HV, 1948GV, 948HV, 2148HV, 2048HV, 2254HV, 2354HV, & 2554HV, & Scotts S2048, S2348, & S2554 | 1 | |

# Belts

## John Deere

| OREGON | Replaces | Size | Description | Type | Product Code |
|---|---|---|---|---|---|
| **15-490** | M141627 | 21/32" X 120-9/16" | **Premium Belt** – Secondary Deck Drive<br>Fits 54C decks | 4 | |
| **15-491** | M142997 | 1-3/16" X 129-1/16" | **Premium Belt** – Secondary Deck Drive<br>Fits 62C decks | 4 | |
| **15-492** | M143888<br>M163989 | 21/32" X 112-9/16" | **Premium Belt** – Secondary Deck Drive<br>Fits mid-mount 48C decks | 4 | |
| **15-493** | M147278 | 1/2" X 90" | **Premium Belt** – Drive<br>Fits Powerflow material collection system for 48" decks | 7 | |
| **15-494** | M148556 | 1/2" X 54-9/16" | **Premium Belt** – Primary Deck Drive<br>Fits models SST15, SST16, & SST18 | 7 | |
| **15-497** | M154295 | 21/32" X 150-5/16" | **Premium Belt** | 7 | |
| **15-498** | M154960<br>M143923 | 21/32" X 120-15/16" | **Premium Belt** – Secondary Deck Drive<br>Fits 54 decks | 1 | |
| **15-499** | M155343 | 1/2" X 60" | **Premium Belt** – Deck Drive<br>Fits Z225 Eztrak residential zero turn (080001 - ) | 2 | |
| **15-500** | M155368 | 21/32" X 189-3/8" | **Premium Belt** – Deck Drive<br>Fits X320, X324 Select Series tractors & X500, X520, X534, X540 Multi-Terrain tractors with 48" decks | 1 | |
| **15-501** | M44121<br>M40016<br>M42250 | 21/32" X 67-1/16" | **Premium Belt** – Variable Speed Drive<br>Fits 100 & 200 series lawn & garden tractors | 7 | |
| **75-975** | M41960 | 1/2" x 102-1/8" | **Premium Belt** – Deck<br>For 47" deck on 200 series tractors | 2 | |
| **75-973** | M47765 | 1/2" x 84-1/4" | **Premium Belt** – Primary Drive<br>For 47" deck on 200 series tractors | 1 | |
| **75-672** | M74747 | 1/2" x 105-1/8" | **Premium Belt** – Motion drive<br>Fits STX30, STX38, & STX48 | 1 | |
| **115-206** | M77988<br>M82734 | 5/8" x 60" | **Belt** – Standard Belt for Deck Drive<br>Fits many 38" mowers 100 series, 200 series, GT200 series, LX170 & LX180 series | | |
| **75-248** | M82462 | 1/2" x 66-1/4" | **Premium Belt** – Secondary Drive Sheave<br>Fits series 970 mowers 111, 111H, 112L, 160, 165, 170, 175, 180, & 185, blade to blade belt on LX172, LX176, LX178, LX186, LX188, & STX3 | 1 | |
| **175-248** | | | **Belt** – Standard Version of 75-248 | | |
| **75-360** | M84075 | 1/2" x 79-1/4" | **Premium Belt** – Transmission Drive<br>Fits 111H, 112L, 116H, 165, 175, & 185 models | 1 | |
| **75-974** | M88184 | 1/2" x 60-1/4" | **Premium Belt** – Transmission Drive<br>Fits 108, 111, 112L, 116, STX30, & STX38 lawn tractors | 1 | |

B

## John Deere

| OREGON | Replaces | Size | Description | Type | Product Code |
|---|---|---|---|---|---|
| **75-246** | M110978 | 1/2" x 102" | **Premium Belt** – Hydro Drive<br>Fits LX172, LX173, LX176, LX178, LX186, & LX188 | 1 | |
| **75-296** | M111534 | 5/8" x 130-3/16" | **Premium Belt** – Deck<br>Fits 54" deck on model F725 & F735 | 4 | |
| **75-295** | M110313<br>M154958 | 5/8" x 111-5/16" | **Premium Belt** – Secondary Mower<br>Fits 48" deck on models 240, 245, 260, 265, 285, 320, 325, 345, LX186, LX188, LX255, LX277, LX279, & LX278 lawn & garden tractors | 1 | |
| **175-295** | | | **Belt** – Standard Version of 75-295 | | |
| **75-972** | M112006 | 1/2" x 63-1/4" | **Premium Belt** – Mower Drive<br>Fits GX70, GX75, GX85, GX95, RX63, RX73, RX75, RX95, SX75, SX85, & SX95 riding mowers | 1 | |
| **75-984** | M118685 | 5/8" x 120-1/8" | **Premium Belt** – Secondary Drive<br>Fits 54" deck on G-100 tractor & Scotts model S2554 | 1 | |
| **75-247** | M119539 | 1/2" x 137-3/4" | **Premium Belt** – Mower Drive<br>Fits STX38 & STX48 lawn tractors | 1 | |
| **15-037** | M120381 | 5/8(BB) x 125-3/8" | **Premium Belt** – Deck<br>Fits models F910, F911, F912, F915, F925, F930, F932, & F935 with 60" side discharge decks, models 425, 445, & 455LGT with 60" mid-mount decks, & models X465, X475, X485, X495, X575, X585, X595, X700, X720, X724, X728, X740, & X748 with 60D decks before serial number 030001 | 4 | |
| **75-703** | M122106 | 1/2" x 71-1/4" | **Premium Belt** – Primary Drive<br>Fits GS25, GS30, GS45, & GS75 walk-behind mowers | 1 | |
| **15-035** | M122674 | 1/2" x 92-5/8" | **Premium Belt** – Deck<br>Fits Sabre models 1338G, 1538H, & 1638H with 38" deck | 1 | |
| **75-708** | M122907 | 5/8" x 50-1/8" | **Premium Belt** – Drive<br>Fits G15, GS25, GS30, GS45, & GS75 walk-behind mowers | 6 | |
| **75-297** | M123281 | 1/2" x 143-1/8" | **Premium Belt** – Mower Drive<br>Fits model LT166 with 38" & 46" deck | 1 | |
| **75-299** | M126536 | 1/2" x 114-3/8" | **Premium Belt** – Mower deck drive<br>Fits models LT133, LT150, LT155, LT160, LT166, & LT180 | 1 | |
| **175-299** | | | **Belt** – Standard Version of 75-299 | | |
| **75-298** | M125218 | 1/2" x 96-1/4" | **Premium Belt** – Mower deck<br>Fits 38" black mower deck on model STX38 lawn tractor, S/N 210001 & higher | 1 | |
| **15-036** | M135782 | 5/8(BB) x 137-3/8" | **Premium Belt** – Deck<br>Fits Z-Trak models F620, F680, & F687 with 60" deck | 4 | |
| **75-300** | M143019<br>M118684 | 5/8" x 65-1/8" | **Premium Belt** – Primary mower drive<br>For LX & GX garden tractors, 48c/54c decks | 6 | |
| **175-300** | | | **Belt** – Standard Version of 75-300 | | |

B

# Belts

## John Deere

| OREGON | Replaces | Size | Description | Type | Product Code |
|---|---|---|---|---|---|
| **15-130** | M151276 | 5/8" x 97-5/16" | **Premium Belt** – Traction Drive<br>Fits X500 series Multi-Terrain tractors | 1 | |
| **75-807** | M152284 | 1/2" x 93-9/16" | **Premium Belt** – Traction drive<br>Fits X300 series | 1 | |
| **75-801** | M153160 | 5/8" x 157-13/16" | **Premium Belt** – Deck Drive<br>Fits X300 series, 42M mulching deck before S/N 150001 | 4 | |
| **75-802** | M154601 | 1/2" x 143-5/8" | **Premium Belt** – Deck Drive<br>Fits X300 series, 38" deck with tension handle | 1 | |
| **75-803** | M154621 | 1/2" x 146 -3/16" | **Premium Belt** – Deck Drive<br>Fits X300 & X304 models, 42" deck | 1 | |
| **175-803** | | | **Belt** – Standard Version of 75-803 | | |
| **15-131** | M154897 | 1/2" x 66-9/16" | **Premium Belt** – Engine to Deck Drive<br>Fits X300 42" cut & X500 48" & 54" cut Multi-Terrain tractors | 8 | |
| **75-804** | M155525 | 1/2" x 142-5/16" | **Premium Belt** – Deck Drive<br>Fits X300 series, 38" deck without tension handle | 1 | |
| **75-222** | PT12668<br>PT8666 | 5/8" x 53-5/8" | **Premium Belt** – Engine to Blade<br>For 32" & 36" commercial walk-behind mowers | 1 | |
| **75-221** | PT8675 | 5/8" x 44-5/16" | **Premium Belt** – Wheel<br>For 32"–52" mowers, cogged belt | 6 | |
| **75-223** | PT8676 | 1/2" x 50-3/8" | **Premium Belt** – Blade to blade<br>For 28", 36", & 48" decks | 1 | |
| **15-009** | TCU13195 | 5/8'' x 117-5/16'' | **Premium Belt** – Mule Drive<br>Fits 737 & 757 mid-mount, Z-Trak mower, S/N 030000 & below | 1 | |
| **15-010** | TCU13198 | 5/8'' x 142'' | **Premium Belt** – Deck Spindle Drive<br>Fits 737 mid-mount Z-Trak with 60" deck, 777 Max-Frame Z-Trak with 60" deck, 757 mid-mount Z-Trak with 60" deck, & 797 Max-Frame Z-Trak with 60" deck | 2 | |
| **15-038** | TCU16036 | 7/8" x 173-1/2" | **Premium Belt** – Deck<br>Fits Z-Trak models 777 & 797 with 72" deck | 1 | |
| **15-507** | TCU16092 | 21/32" X 150-7/8" | **Premium Belt** – Deck Drive<br>Fits 717 Mini-Frame Z-Trak & Great Dane Chariot mowers with 48" decks | 1 | |
| **15-039** | TCU16495 | 5/8" x 126" | **Premium Belt** – PTO Drive<br>Fits Z-Trak models 777 & 797 | 1 | |
| **15-508** | TCU16841 | 1-1/8" X 32-5/16" | **Premium Belt** – Pump Drive<br>Fits 777 & 797 Max-Frame Z-Trak mowers | 1 | |
| **15-040** | TCU20002 | 1/2" x 54-9/16" | **Premium Belt** – Mule Drive<br>Fits Z-Trak Mini-Frame models 717A, 717E, & 727A | 2 | |

B

| OREGON | Replaces | Size | Description | Type | Product Code |
|---|---|---|---|---|---|
| **John Deere** | | | | | |
| **15-041** | TCU25673 | 1/2" x 69-1/4" | **Premium Belt** – Traction Drive<br>Fits Z-Trak Pro Series models Z930A, Z950A, Z960A, Z970A, & Z925A before S/N 020001 | 2 | |
| **15-042** | TCU26297 | 5/8" x 180-1/4" | **Premium Belt** – Deck<br>Fits Z-Trak Pro Series models Z920A, Z930A, Z950A, Z960A, & Z925A with 60" deck before S/N 020001 | 1 | |
| **Kees / Yazoo** | | | | | |
| **15-951** | 100023 | 21/32" X 94-1/16" | **Premium Belt** | 7 | |
| **15-952** | 100024 | 21/32" X 52-1/16" | **Premium Belt** | 7 | |
| **15-954** | 101141 | 21/32" X 54-1/16" | **Premium Belt** | 7 | |
| **15-955** | 101228 | 1/2" X 49-1/16" | **Premium Belt** | 7 | |
| **15-956** | 101736 | 21/32" X 106-5/16" | **Premium Belt** | 1 | |
| **15-957** | 101996 | 21/32" X 99-13/16" | **Premium Belt** | 1 | |
| **15-958** | 102549 | 21/32" X 143-5/8" | **Premium Belt** | 1 | |
| **15-959** | 106339 | 1/2" X 159-3/16" | **Premium Belt** | 1 | |
| **75-269** | 100026 | 1-1/8" x 45-1/2" | **Premium Belt** – Wheel drive<br>For double "V" cogged for 36" & 48" | 5 | |
| **75-687** | 104335 | 5/8" x 163-1/4" | **Premium Belt** – Deck<br>For Max 2 series with 52" deck | 1 | |
| **75-688** | 104336 | 5/8" x 183" | **Premium Belt** – Deck<br>For Max 2 series with 61" deck | 1 | |
| **75-036** | 363143 | 5/8" x 88-7/8" | **Premium Belt** – Blade drive<br>For 36" | 2 | |
| **75-221** | 363144 | 5/8" x 44-5/16" | **Premium Belt** – Wheel<br>For variable speed 32", 36", & 48" | 6 | |
| **75-240** | 363145 | 5/8" x 35-1/4" | **Premium Belt** – Engine to transmission<br>For variable speed 32" & 36" | 2 | |
| **75-058** | 483013 | 5/8" x 93-1/4" | **Premium Belt** – Blade drive<br>For 48" | 2 | |
| **15-961** | 205-505 | 1/2" X 80-1/8" | **Premium Belt** | 4 | |
| **15-962** | 205-513 | 21/32" X 96-1/2" | **Premium Belt** | 4 | |
| **15-963** | 205-514 | 21/32" X 116" | **Premium Belt** | 4 | |

# Belts

| OREGON | Replaces | Size | Description | Type | Product Code |
|---|---|---|---|---|---|
| **King Kutter** | | | | | |
| **15-512** | 167133 | 21/32" X 135-7/8" | **Premium Belt** | 2 | |
| **15-513** | 167148 | 1/2" X 151-5/16" | **Premium Belt** | 2 | |
| **15-514** | 167149 | 21/32" X 151-7/8" | **Premium Belt** | 9 | |
| **15-515** | 167163 | 1-3/8" X 165-13/16" | **Premium Belt** | 9 | |
| **Kubota** | | | | | |
| **15-516** | 1G062-97012<br>14911-97010 | 3/8" X 37-5/8" | **Premium Belt** – Fan<br>Fits B21, B2400, B2410, B2910, B7610, B7800, F2260, F2400, F2560, F2680E, F2880F, F3060, F3680, & FZ2400 | 2 | |
| **15-517** | 15481-97010 | 1/2" X 65" | **Premium Belt** | 2 | |
| **15-519** | 62421-62310 | 1/2" X 41" | **Premium Belt** – Set of 2 | 1 | |
| **15-522** | 66101-25080<br>HH6610-25000 | 21/32" X 33-1/2" | **Premium Belt** – PTO | 2 | |
| **15-525** | 70050-94495 | 21/32" X 176-3/8" | **Premium Belt** | 2 | |
| **15-526** | 70050-94497 | 21/32" X 102-13/16" | **Premium Belt** | 2 | |
| **15-529** | 70713-34770 | 21/32" X 84-1/16" | **Premium Belt** | 2 | |
| **15-535** | 76505-34710 | 1/2" X 95-15/16" | **Premium Belt**<br>Fits G1800 & G1900 | 1 | |
| **15-536** | 76516-61510 | 21/32" X 62-5/16" | **Premium Belt**<br>Fits T1700H | 2 | |
| **15-538** | 76529-34710 | 1-3/16" X 111-15/16" | **Premium Belt** – Deck<br>Fits B1550, B1750, G1800 | 9 | |
| **15-539** | 76539-34710 | 1-3/16" X 120" | **Premium Belt** – Deck<br>Fits B1550, B1750 | 9 | |
| **15-541** | 76553-34710 | 1-1/8" X 141" | **Premium Belt** | 9 | |
| **15-544** | K5645-34710 | 1-3/16" X 119-1/2" | **Premium Belt** – Deck<br>Fits ZD18, ZD21, ZD28 | 9 | |
| **15-545** | K5651-34710 | 1-1/8" X 129-5/8" | **Premium Belt** – Deck<br>Fits F2560E, F3060 | 9 | |
| **15-546** | K5651-34711 | 21/32" X 129-1/16" | **Premium Belt** | 9 | |
| **15-547** | K5671-34710 | 21/32" X 137-1/2" | **Premium Belt** – Deck<br>Fits B3030, B7800, F3060, ZD28 | 9 | |
| **15-548** | K5677-34710 | 21/32" X 135-9/16" | **Premium Belt**<br>Fits ZD28, ZD326P, ZD331LP | 9 | |

| OREGON | Replaces | Size | Description | Type | Product Code |
|---|---|---|---|---|---|
| **Kubota** | | | | | |
| **15-549** | K5700-34710<br>K5700-34712 | 1-3/16" X 103-15/16" | **Premium Belt** | 9 | |
| **15-550** | K5763-34710 | 1-3/16" X 119-1/2" | **Premium Belt** | 9 | |
| **15-011** | K5351-34710 | 1-1/4"(2V) x 113-3/16" | **Premium Belt** – Deck Spindle Drive, 2A Banded<br>Fits 54" cut models B2320, B2620, & B2920 with RCK54-29B, B7400, B7500, B7510, & B7610 with RCK54-75B, BX1500 with RCK54-15BX, BX1800, BX1830 BX22, BX2200, BX2230, BX23LB-B, BX23LB-T with RCK54-22BX deck, BX1850, BX1860, BX2350, BX2360, BX24, BX25, BX2660 with RCK54-23BX, & ZD321 with RCK54-321Z | 9 | |
| **15-043** | K5764-34710 | 1-1/4"(2V) x 112-11/16" | **Premium Belt** – Deck<br>For ZD & ZG models with 54" deck | 9 | |
| **15-012** | K5647-34710 | 1-1/4"(2V) x 123-7/16" | **Premium Belt** – Deck Spindle Drive, 2A Banded<br>Fits 60" cut models F2680, F2880 with RCK60R-36 & RCK60P-F36 decks, F2880, F3080, F3680 with RCK60P-F36 & RCK60R decks, & ZD21, ZD25, ZD28, ZD323, ZD326P, ZD331LP, & ZG327 with 60" decks | 9 | |
| **Kuhn Belt** | | | | | |
| **15-553** | 83101670 | 5/8" X 98-7/8" | **Premium Belt** | 2 | |
| **Lawn-Boy** | | | | | |
| **15-561** | 200555<br>705361 | 3/8" X 45-9/16" | **Premium Belt** | 7 | |
| **15-559** | 234594<br>702553 | 3/8" X 46-5/16" | **Premium Belt** | 7 | |
| **115-703** | 110-9429 | 32-1/10 X 3/8" | **Premium Belt** – Blade Belt – NEW<br>10634, 10732, 10734, 17732, 17734 & fits all 20-inch self-propelled Lawn-Boy models (2008–2013) | 1 | |
| **Lesco** | | | | | |
| **15-570** | 68093 | 21/32" X 56-5/16" | **Premium Belt** | 1 | |
| **15-571** | 700151 | 1-3/16" X 52-3/4" | **Premium Belt** | 9 | |
| **15-572** | 705010 | 1/2" X 47" | **Premium Belt** | 1 | |
| **15-573** | 705375 | 1/2" X 114-1/16" | **Premium Belt** | 1 | |
| **15-574** | 705376 | 1/2" X 122-5/16" | **Premium Belt** | 1 | |
| **15-575** | 705377 | 21/32" X 91-7/16" | **Premium Belt** | 1 | |
| **15-576** | 705378 | 21/32" X 87-7/16" | **Premium Belt** | 1 | |
| **15-566** | 07200504 | 21/32" X 84-5/16" | **Premium Belt** | 1 | |
| **15-567** | 7225500 | 1/2" X 40-1/2" | **Premium Belt** | 7 | |
| **15-568** | 7243600 | 1-3/16" X 50-1/2" | **Premium Belt** | 5 | |

# Belts

| OREGON | Replaces | Size | Description | Type | Product Code |
|---|---|---|---|---|---|
| **Little Wonder** | | | | | |
| **75-101** | 177 | 1/2" x 30-1/4" | **Premium Belt**<br>Fits edgers models GE-1 & GE-2 | 1 | |
| **Manco** | | | | | |
| **15-577** | 5959 | 3/4" X 27-1/4" | **Premium Belt** | 10 | |
| **Massey Ferguson** | | | | | |
| **15-578** | 515382M1 | 7/8" X 45-3/4" | **Premium Belt** | 7 | |
| **15-579** | 515383M1 | 21/32" X 60-13/16" | **Premium Belt** | 7 | |
| **McLane** | | | | | |
| **75-120** | 1060 | 1/2" x 19-1/4" | **Premium Belt**<br>For edgers | 1 | |
| **75-101** | 2058 | 1/2" x 30-1/4" | **Premium Belt**<br>For edgers | 1 | |
| **75-123** | 4060 | 1/2" x 20" | **Premium Belt**<br>For reel mowers | 1 | |
| **15-580** | 7102 | 1/2" X 24-1/2" | **Premium Belt** | 2 | |
| **MTD** | | | | | |
| **15-581** | 30779<br>00030779 | 21/32" X 79-9/16" | **Premium Belt** – Deck Drive<br>Fits 1332 walk-behind mowers | 1 | |
| **75-148** | 954-0101A<br>754-0101A<br>754-0101 | 1/2" x 35" | **Premium Belt**<br>Fits 4 HP & 5 HP 20" single stage snow throwers models 150-190 & Yardman model 285-295 | 1 | |
| **15-589** | 954-0125<br>754-0125<br>754-0125A | 1/2" X 105-5/16" | **Premium Belt** – Lower Drive<br>Fits 190-032 & 190-8232-stage snow thrower attachments (2000–2008) | 2 | |
| **75-502** | 54-04260 | 34-1/8 - 3/8" | **Premium Belt** – Deck – NEW<br>Wrapped, clutching two-stage snow throwers and walk-behind mowers | 1 | |
| **75-365** | 754-0131<br>954-0131 | 3/8" x 35-1/2" | **Premium Belt** – Drive<br>Fits snow thrower models 314-600 & 314-800, & rider model 50748 | 6 | |
| **15-590** | 954-0142<br>754-0142<br>OEM-754-0142 | 3/8" X 31" | **Premium Belt** – Shaft Drive<br>For wheeled lawn edgers | 7 | |
| **75-145** | 954-0145A<br>954-0145<br>754-0145A<br>754-0145 | 5/8" x 69-5/16" | **Premium Belt** – Blade<br>Fits 38" deck on 500, 600, 480, & 890 series (1971–1987) | 1 | |

B

## MTD

| OREGON | Replaces | Size | Description | Type | Product Code |
|---|---|---|---|---|---|
| **75-518** | 754-05106<br>954-05106<br>754-05106A | 1/2" x 60" | **Premium Belt** – Deck – NEW<br>Wrapped Clutching<br>Fits 28" Decks (2017 and newer) | 1 | |
| **75-004** | 954-0151<br>754-0151 | 5/8" x 67" | **Premium Belt** – Engine to Variable Speed<br>Fits models 300, 600, & 490 series (1971–1999) | 2 | |
| **15-593** | 954-0181<br>754-0181 | 1/2" X 100-1/16" | **Premium Belt** – Spindle Drive<br>Fits 195-957-000 & 19957S42" mower decks | 1 | |
| **15-594** | 954-0190<br>754-0190 | 1/2" X 39-3/16" | **Premium Belt** – Tine Drive<br>For front tine tillers (1985–1995) | 1 | |
| **75-090** | 954-0194<br>754-0194 | 1/2" x 45-1/4" | **Premium Belt** – Auger Drive<br>Fits snowblower model 980 | 1 | |
| **75-079** | 954-0197<br>754-0197 | 1/2" x 117-1/8" | **Premium Belt** – Deck Pulley<br>Fits 50" deck on 900 series garden tractors | 2 | |
| **15-595** | 954-0218<br>754-0218 | 9/16" X 58-7/8" | **Premium Belt** | 2 | |
| **75-008** | 954-0230<br>754-0230 | 1/2" x 56-1/4" | **Premium Belt** – Engine to Mower<br>Fits garden tractors models 700, 800, & 900 with 42" & 50" decks (1977–1990) | 1 | |
| **75-009** | 954-0240<br>754-0240 | 5/8" x 35-1/8" | **Premium Belt** – Pulley to Transmission<br>Fits variable speed 500 series (1984–1996) | 1 | |
| **75-012** | 954-0241A<br>954-0241<br>754-0241A<br>754-0241 | 5/8" x 35-1/8" | **Premium Belt** – Engine to Pulley<br>Fits variable speed 500 series (1982–1998) | 1 | |
| **175-012** | | | **Belt** – Standard Version of 75-012 | 1 | |
| **15-598** | 954-0264<br>754-0264 | 1/2" X 52-3/8" | **Premium Belt** – Deck Drive<br>For riding mowers with 30" deck (1985-1996) | 1 | |
| **75-016** | 954-0266A<br>954-0266<br>754-0266A<br>754-0266 | 1/2" x 85-1/4" | **Premium Belt** – Transmission Drive<br>Fits 600 series 4-speed tractors (1985–1986) | 1 | |
| **75-002** | 954-0280A<br>954-0280<br>754-0280A<br>754-0280 | 45/64" x 53-3/8" | **Premium Belt** – Engine to Pulley<br>Fits variable speed 300, 400, 500, 600, & 700 series (1982–1998)<br>Use with Oregon® 75-281 | 1 | |
| **175-002** | | | **Belt** – Standard Version of 75-002 | | |
| **75-281** | 954-0281<br>754-0281 | 5/8" x 44-3/16" | **Premium Belt** – Pulley to Transmission<br>Fits variable speed 300, 400, 500, 600, & 700 series (1985–1998)<br>Use with Oregon 75-002 | 1 | |
| **75-018** | 954-0293<br>754-0293 | 1/2" x 74-1/8" | **Premium Belt** – Deck Spindle<br>Fits 44" side discharge 600, 700, & 800 series riders (1984–1990) | 2 | |

# Belts

## MTD

| OREGON | Replaces | Size | Description | Type | Product Code |
|---|---|---|---|---|---|
| **15-601** | 954-0325<br>754-0325 | 1/2" X 57-1/8" | **Premium Belt** – Gear Case Drive<br>For rear tine tillers (1986–1992) | 1 | |
| **75-020** | 954-0343<br>754-0343 | 3/8" x 31-1/4" | **Premium Belt** – Traction Drive<br>Fits self-propelled mowers (1986–1998), & rear wheel drive, side discharge, 2-stage snow thrower models E600E to 6150 | 1 | |
| **75-091** | 954-0346<br>754-0346 | 3/8" x 30-5/16" | **Premium Belt** – Wheel Drive<br>Fits 600 & 700 series snow blowers, model 400 self-propelled mower with gearbox rear wheel drive, & rear discharge mowers (1986–1998) | 1 | |
| **75-021** | 954-0349<br>754-0349 | 1/2" x 79-5/16" | **Premium Belt** – Cross Drive<br>Fits 46" side discharge 600, 700, & 800 series (1987–2000) & MTD Yardman Revolution 2001 & newer | 1 | |
| **75-035** | 954-0350<br>754-0350 | 5/8" x 64-1/4" | **Premium Belt** – Engine to Deck<br>Fits 46" cut, 100, 700, & 800 series (1987–1996) | 1 | |
| **75-023** | 954-0355<br>754-0355 | 1/2" x 67-1/4" | **Premium Belt**<br>Fits 32" cut "D" 300 series decks (1987–1989) | 1 | |
| **75-024** | 954-0358<br>754-0358 | 7/8" x 54-5/8" | **Premium Belt** – Pulley to Engine<br>For variable speed 800 series, 2-speed garden tractor (1988–1996) | 2 | |
| **75-118** | 954-0362<br>754-0362 | 7/8" x 47-7/8" | **Premium Belt** – Drive Transmission<br>For 800 series variable speed, 2-speed garden tractors (1990–1996) | 1 | |
| **75-025** | 954-0364<br>754-0364 | 5/8" x 68-1/4" | **Premium Belt** – Lower Engine Pulley<br>Fits deck on 36" cut, 400, 600, & 800 series (1989–1998) | 1 | |
| **175-025** | | | **Belt** – Standard Version of 75-025 | 1 | |
| **75-157** | 954-0367<br>754-0367 | 3/8" x 34-3/4" | **Premium Belt**<br>Fits single stage snow thrower models 140 & 181 (1990–1996) | 1 | |
| **75-027** | 954-0369<br>754-0369 | 3/8" x 32-3/4" | **Premium Belt** – Drive<br>Fits 22" self-propelled, rear wheel drive, side discharge 200, 500, 700, & 800 series riders (1990–1998) | 1 | |
| **75-119** | 954-0370<br>754-0370 | 5/8" x 49-1/8" | **Premium Belt** – Pulley to Transmission<br>Fits variable speed 600 & 700 series models (1989–2000) | 1 | |
| **175-119** | | | **Belt** – Standard Version of 75-119 | 1 | |
| **75-028** | 954-0371A<br>954-0371<br>754-0371A<br>754-0371 | 5/8" x 74-1/4" | **Premium Belt** – Deck to Lower Engine<br>Fits riders with 42" side discharge, "G" series deep deck (1989–1996) | 1 | |
| **175-028** | | | **Belt** – Standard Version of 75-028 | 1 | |

B

## MTD

| OREGON | Replaces | Size | Description | Type | Product Code |
|---|---|---|---|---|---|
| **75-158** | 954-0431<br>954-0430B<br>954-0430A<br>954-0430<br>754-0431<br>754-0430B<br>754-0430A<br>754-0430 | 3/8" x 35-1/4" | **Premium Belt** – Drive<br>Fits 5 HP dual stage snow throwers, models E600E to 615D (1992–1997)<br>Matched set of 2, priced per set | 6 | |
| **175-029** | | | **Belt** – Standard Version of 75-029 | 1 | |
| **75-029** | 954-0433<br>754-0433<br>754-0329A | 5/8" x 69-1/4" | **Premium Belt**<br>Fits 38" deck on 600 series riders 754-0329A & 954-0329A | 1 | |
| **75-999** | 954-0434<br>754-0434 | 1/2 x 58-1/4" | **Premium Belt** – Forward Drive<br>Fits 430, 440, & 450 series, rear tine tillers (1997 & newer) | 2 | |
| **15-616** | 954-0438<br>OEM-754-0438<br>754-0438 | 1/2" X 51" | **Premium Belt** – Gear Case Drive<br>For rear tine tillers (1994–2008) | 2 | |
| **75-159** | 954-0439<br>754-0439 | 5/8" x 60-1/4" | **Premium Belt** – Engine to Deck<br>Fits 46" deep deck on 600 series (1992–1996) | 1 | |
| **75-161** | 954-0440<br>754-0440 | 1/2" x 99-3/16" | **Premium Belt** – Deck<br>Fits 46" deck on 600 series tractors (1992–1998) | 2 | |
| **75-160** | 954-0441<br>754-0441 | 1/2" x 76-1/8" | **Premium Belt** – Transmission to Engine<br>Fits 42" 600 series lawn tractors (1993–1995) | 2 | |
| **75-109** | 954-0443A<br>954-0443<br>754-0443A<br>754-0443 | 1/2" x 90-1/2" | **Premium Belt** – Mower Deck<br>Fits rear discharge mower model 765 | 4 | |
| **75-674** | 954-0446 | 5/8" x 46-1/4" | **Premium Belt** – Drive<br>Fits variable drive 800 series tractors | 1 | |
| **75-675** | 954-0453 | 5/8 X 36-1/2" | **Premium Belt** – Drive<br>Fits variable drive Yard Bug | 1 | |
| **75-995** | 954-0467A<br>954-0467<br>754-0467A<br>754-0467 | 5/8" x 91" | **Premium Belt** – Lower Drive<br>Fits 600 series auto drive mowers (1999–2003) | 1 | |
| **175-995** | | | **Belt** – Standard Version of 75-995 | 1 | |
| **75-993** | 954-0468<br>754-0468 | 5/8" x 41-3/16" | **Premium Belt** – Upper Drive<br>Fits 600 series auto drive mowers (1999–2003) | 1 | |
| **175-993** | | | **Belt** – Standard Version of 75-993 | | |

B

# Belts

## MTD

| OREGON | Replaces | Size | Description | Type | Product Code |
|---|---|---|---|---|---|
| **75-361** | 954-0472<br>754-0472 | 5/8" x 83-1/4" | **Premium Belt** – Engine to Deck<br>For 42" auto drive units, 1999 model with electric PTO | 1 | |
| **75-362** | 954-0474<br>754-0474 | 5/8" x 102-1/8" | **Premium Belt** – Engine to Deck<br>Fits 46" lawn tractor with electric PTO clutch (1999 & newer) & MTD Yardman Revolution (2001 & newer) | 1 | |
| **75-363** | 954-0475<br>754-0475 | 5/8" x 107-13/16" | **Premium Belt** – Deck to Lower Engine Pulley<br>For auto drive step through frame on 50" garden tractor (1999 & newer) | 2 | |
| **75-364** | 954-0476<br>754-0476 | 5/8" x 100-1/4" | **Premium Belt** – Engine to Deck Belt<br>For 46" deck on auto drive lawn tractors with electric PTO | 1 | |
| **15-619** | 954-0483<br>754-0483 | 3/8" X 38-1/8" | **Premium Belt** – Transmission Drive<br>For 22" front wheel drive self-propelled mowers (2000–2002) | 7 | |
| **75-263** | 954-0485<br>754-0485 | 5/8" x 97-1/4" | **Premium Belt** – PTO<br>For 42" deck with manual PTO (2000 & newer) | 1 | |
| **75-264** | 954-0486A<br>954-0486<br>754-0486A<br>754-0486 | 5/8" x 67-1/4" | **Premium Belt** – PTO<br>For 46" deck with manual PTO (2000 & newer), deck pulley to lower engine pulley | 1 | |
| **75-676** | 954-0497 | 1/2" x 60-3/8" | **Premium Belt** – PTO to Deck<br>Fits 600 serires riders with 42" deck (2 belt type) | 1 | |
| **175-676** | | | **Belt** – Standard Version of 75-676 | 1 | |
| **75-677** | 954-0498 | 1/2" x 67-1/4" | **Premium Belt** – Deck<br>Fits 600 series riders with 42" deck (2 belt type) | 1 | |
| **175-677** | | | **Belt** – Standard Version of 75-677 | | |
| **75-994** | 954-0642<br>754-0642 | 5/8" x 138-3/16" | **Premium Belt** – Deck Drive<br>Fits 54" auto drive model with electric PTO | 1 | |
| **175-994** | | | **Belt** – Standard Version of 75-994 | 1 | |
| **15-623** | 954-0641<br>754-0641 | 1/2" X 105" | **Premium Belt** – Deck Drive<br>For 38" decks | 1 | |
| **75-092** | 754-0935<br>954-0935 | 1/2" x 31-1/4" | **Premium Belt** – Drive<br>Fits SP models 352R & 359R, traction drive for models 640, 642, 646, 660, & 666 snow blowers | 1 | |
| **15-629** | 954-3053<br>754-3053 | 1/2" X 104-7/16" | **Premium Belt** – Spindle to Gear Box Drive<br>Fits 190-0322-stage snow thrower attachments (2009–2013) | 2 | |
| **15-602** | 954-04003A<br>954-04003<br>754-04003 | 3/8" X 32-15/16" | **Premium Belt** – Transmission Drive<br>For 22" front wheel drive self-propelled mowers (2002–2005) | 7 | |
| **15-603** | 954-04013<br>754-04013 | 3/8" X 21-1/2" | **Premium Belt** – Wheel Drive<br>For 2-stage snow throwers (2004–2014) | 2 | |

## MTD

| OREGON | Replaces | Size | Description | Type | Product Code |
|---|---|---|---|---|---|
| **15-604** | 954-04014<br>754-04014 | 3/8" X 27" | **Premium Belt** – Auger Drive<br>For 2-stage snow throwers (2004–2014) | 7 | |
| **15-609** | 954-04100<br>754-04100 | 3/8" X 32-15/16" | **Premium Belt** – Transmission Drive<br>For 22" front wheel drive self-propelled mowers (2006–2010) | 7 | |
| **15-613** | 954-04207<br>754-04207 | 1/2" X 79-3/8" | **Premium Belt** – Hydro Transmision Drive<br>Fits 13AA925, 13AP91G,13AP93G 13AP925, 13AQ92G, 13AR91P, 13AT915, 13AV91G, 13AX915, 13AX91K, & 13AX93K (2010–2014) | 1 | |
| **75-673** | 754-04001<br>754-04001A<br>954-04001<br>954-04001A | 5/8" x 69-3/16" | **Premium Belt** – Engine to Variable Drive Pulley<br>Fits 600 series riders (2003 & newer) | 2 | |
| **175-673** | | | **Belt** – Standard Version of 75-673 | 2 | |
| **75-709** | 954-04002 | 5/8" x 31-15/16" | **Premium Belt** – V<br>Fits variable drive on 600 series tractors (2002 & newer) | 8 | |
| **75-249** | 754-04032B<br>754-0465<br>954-04032B<br>954-0465 | 3/8" x 36-1/4" | **Premium Belt** – Self-Propel<br>Fits 21", 400 & 500 series (1998 & newer) | 1 | |
| **15-013** | 754-04041<br>954-04041 | 5/8" x 111-5/16" | **Premium Belt** – PTO<br>Fits GT2542 (2008 & earlier), GT2186-44, GT2186-48, GT2521-48, GT2544, LT2042, LT2138, & LT2180 with 42" deck | 1 | |
| **115-219** | 954-04050<br>754-04050 | 1/2" X 35" | **Standard Belt** – Auger Drive<br>Fits 2-stage snow throwers (2005–2013) | 6 | |
| **75-600** | 754-04062<br>942-04062 | 1/2'' x 77-7/8'' | **Premium Belt** – Deck Drive<br>Fits 38" cut decks on 700 series (2005 & newer) | | |
| **15-053** | 954-04093 | 3/8" x 35-7/8" | **Premium Belt** – Self-Propel<br>Fits models 12AG836E, 12AG839E, 12AV829C, 12AV834Q, 12AV835Q, 12AV838Q, 12AV839Q, & 12BV829Q | 2 | |
| **15-025** | 754-04122<br>954-04122 | 1/2" x 90-1/4" | **Premium Belt** – Engine to Deck Drive<br>Fits 46" cut mowers, models 13**6**H*** (2006–2009) | 1 | |
| **15-112** | 954-04138A | 5/8" x 143" | **Premium Belt** – Deck Drive<br>Fits RZT54 | 1 | |
| **15-026** | 754-04142<br>954-04142 | 1/2" x 91-1/2" | **Premium Belt** – Engine to Deck Drive<br>Fits 46" cut mowers, models 13**7**H*** (2007–2009) | 1 | |
| **15-052** | 954-04201A | 3/8" x 36" | **Premium Belt** – Snow Thrower Wheel Drive<br>Fits models 31AH54TG, 31AH55LH, 31AH55TH, 31AH64EG, 31AH65FH, 31AH65LG, 31AM62EE, 31AM63EF, 31BM62KE, & 31BM63LF (2009–2011) | 1 | |

B

# Belts

| OREGON | Replaces | Size | Description | Type | Product Code |
|---|---|---|---|---|---|
| **MTD** | | | | | |
| **15-027** | 754-04219<br>954-04219 | 1/2" x 103" | **Premium Belt** – Mower Deck Drive<br>Fits 46" cut mowers (2 blade deck), models 13**7**T*** & 13**9**T*** (2010–2011), Craftsman models 247.288851, 247.28886, 247.28881, & 247.28880 | 1 | |
| **15-028** | 754-04240<br>954-04240 | 1/2" x 162" | **Premium Belt** – Mower Deck Drive<br>Fits 50" cut mowers 13**9**P*** (2010) & Craftsman model 247.289810 | 1 | |
| **15-132** | 954-04252<br>754-04252 | 1/2" x 84-3/16" | **Premium Belt** – Traction Drive<br>For many lawn tractors (2010–2013) | 1 | |
| **15-133** | 954-04259A<br>754-04259<br>754-04259A | 3/8" x 33-3/4" | **Premium Belt** – Traction Drive<br>For many self-propelled mowers (2011–2013) | 1 | |
| **15-100** | 954-04265 | 5/8" x 34" | **Premium Belt** – Upper Variable Speed<br>For some lawn tractors (2010–2012) | 1 | |
| **Murray** | | | | | |
| **15-645** | 3887 | 1/2" X 31" | **Premium Belt** | 7 | |
| **15-630** | 24304 | 1/2" X 83-1/8" | **Premium Belt** | 1 | |
| **15-646** | 581264<br>581264MA | 1/2" X 35-1/4" | **Premium Belt** – Wheel Drive<br>For 2-stage snow throwers (2000–2001) | 7 | |
| **115-209** | 585416<br>585416MA | 1/2" x 38-3/8" | **Belt** – Standard Belt for Auger Drive<br>Fits many 2-stage snow throwers (2004–2011) | | |
| **15-647** | 585436<br>585436MA | 1/2" X 37-13/16" | **Premium Belt** | 7 | |
| **15-648** | 760928<br>760928MA | 3/8" X 35-1/16" | **Premium Belt** – Auger Drive<br>For single stage snow throwers (2000–2003) | 7 | |
| **75-367** | 37X3<br>0037X3<br>0037X3MA | 1/2" x 46-1/4" | **Premium Belt** – Drive<br>For side discharge models with 36" cut decks (1976–1980 & 1983–1988) | 1 | |
| **75-111** | 37X11<br>21615 | 1/2" x 95-1/8" | **Premium Belt** – Transmission Drive<br>For 36", 38", & 42" riding mowers<br>NOT used on uniframe models | 1 | |
| **75-112** | 21649<br>37X12<br>037X12<br>037X12MA | 1/2" x 55-1/8" | **Premium Belt** – Blade<br>For 25", 30", & 36" cut | 1 | |
| **75-040** | 23748<br>37X21<br>37X40<br>037X40<br>037X40MA | 1/2" x 62-1/4" | **Premium Belt** – Blade<br>For 39", 40", & 42" cut | 2 | |

B

## Murray

| OREGON | Replaces | Size | Description | Type | Product Code |
|---|---|---|---|---|---|
| **75-022** | 23749<br>37X22<br>037X22<br>037X22MA | 1/2" x 99-5/16" | **Premium Belt** – Cross Drive<br>For all 38", 39", & 42" decks | 2 | |
| **75-026** | 37X26<br>037X26<br>037X26MA | 1/2" x 88-1/4" | **Premium Belt** – Transmission<br>For 42" lawn tractor | 1 | |
| **15-634** | 37x35 | 1/2" X 90-9/16" | **Premium Belt** | 1 | |
| **75-038** | 37X38<br>037X38<br>037X38MA | 1/2" x 40-1/2" | **Premium Belt** – Transmission<br>For 25" & 30" riding mower | 1 | |
| **75-005** | 37X43<br>037X43<br>037X43MA | 1/2" x 83-1/8" | **Premium Belt**<br>For 36" deck, rear & side discharge uniframe | 1 | |
| **75-045** | 37X45<br>037X45<br>037X45MA | 1/2" x 90-1/8" | **Premium Belt** – Motion Drive<br>For uniframe units with 5-speed transaxle | 1 | |
| **75-057** | 37X57<br>037X57<br>037X57MA<br>MU37X57 | 1/2" x 53-1/4" | **Premium Belt** – Blade Drive<br>For 30" rear engine rider | 1 | |
| **75-061** | 37X61<br>037X61<br>037X61MA<br>710531 | 1/2" x 95" | **Premium Belt** – Drive<br>For 30", 38", & 40" gear & 50" gear drive on LT pan frame tractors & 30", 40", 42", 46", & 48" decks with Peerless Hydro Drive | 1 | |
| **75-041** | 37x62<br>037X62<br>037X62MA | 1/2" x 86-3/8" | **Premium Belt** – Deck<br>For 40" cut LT tractors, models with side discharge (1989 & newer) | 1 | |
| **175-041** | | | **Belt** – Standard Version of 75-041 | | |
| **75-063** | 37X63<br>037X63<br>037X63MA | 1/2" x 83-1/2" | **Premium Belt** – Blade Drive<br>For 38" deck (1989 & newer) | 1 | |
| **75-122** | 37X64<br>037X64<br>037X64MA | 1/4" x 36-5/8" | **Premium Belt** – Drive<br>For 21" rear drive self-propelled 3-n-1 & 2-n-1 mowers (1990 & newer) | 2 | |
| **75-065** | 37X65<br>037X65<br>037X65MA<br>MU37X65 | 1/2" x 30-1/4" | **Premium Belt** – Engine to Transaxle<br>For 25" & 30" rear engine rider & LT tractors (1990 & newer) | 1 | |
| **75-094** | 37X66<br>037X66<br>037X66MA<br>710216 | 1/2" x 47-5/16" | **Premium Belt** – Cross Drive<br>For 40" & 46" decks on GT & LTX trailers, LT & rail frame tractors (1990 & newer) | 2 | |

B

# Belts

## Murray

| OREGON | Replaces | Size | Description | Type | Product Code |
|---|---|---|---|---|---|
| **75-103** | 37X68<br>037X68<br>037X68MA | 1/2" x 101-5/16" | **Premium Belt** – Drive<br>For LT frame & LTX tractors, motion drive belt, gear drive (1990–1998), 5.0.6 tractors with 42" & 46" decks, & GT Frame with 42" & 46" decks | 1 | |
| **75-151** | 37x69<br>037X69<br>037X69MA | 1/2" x 80-3/4" | **Premium Belt** – Blade Drive<br>For Murray & Ultra lawn tractors, 18 HP, 4630 series with 46" cut, LT & GT tractors (1990–1998), & X tractors with 46" deck | 1 | |
| **75-001** | 37X70<br>037X70<br>037X70MA | 1/2" x 76-3/4" | **Premium Belt** – Primary Drive<br>For 46" deck on LT (1990–1995), 14 HP & 18 HP lawn tractors | 1 | |
| **15-638** | 037X73MA<br>037X73 | 3/8" X 44" | **Premium Belt** – Wheel Drive<br>For rear wheel drive self-propelled mowers with Tecumseh engines (1994–1997) | 7 | |
| **75-152** | 37X75 | 1/2" x 91" | **Premium Belt** – Blade Belt<br>Fits 42" cut, 12–18 HP models (1990–1994) | 1 | |
| **15-641** | 037X81MA<br>37X81<br>37X81MA | 1/2" X 88-5/8" | **Premium Belt** – Hydro Transmission Drive<br>Fits 46250, 46254, 46258 lawn tractors (1996) | 1 | |
| **15-642** | 037X83MA<br>37X83 | 1/2" X 79-3/8" | **Premium Belt** – Hydro Transmission Drive<br>Fits 42910 lawn tractors (1996) | 1 | |
| **15-643** | 37X90 | 1/4" X 35-7/16" | **Premium Belt** – Wheel Drive<br>Fits 21975X92C rear wheel drive self-propelled mowers | 7 | |
| **15-644** | 037X97MA<br>37X97 | 1/2" X 95" | **Premium Belt** – Hydro Transmission Drive<br>Fits 461603, 41604, & 521613 garden tractors (2000–2005) | 1 | |
| **75-042** | 37X80<br>037X80<br>037X80MA | 1/2" x 86-1/8" | **Premium Belt** – Motion Driver<br>For Dana & Eaton hydro units on LT series with 40", 42", & 46" decks, & 12.5 HP, 14 HP, & 18 HP LT hydro (1994 & newer) | 1 | |
| **75-266** | 37X86<br>037X86<br>037X86MA<br>710193 | 1/2" x 84-11/16" | **Premium Belt** – Blade Drive<br>For 38" cut, LT tractor | 1 | |
| **75-209** | 37X87<br>037X87<br>037X87MA<br>MU037X87<br>MU037X87MA<br>710341 | 1/2" x 97-1/16" | **Premium Belt**<br>For LT gear drive & 5.0.6 drive on 30", 38", 40", 42", & 46" decks & hydro belt on 42" LT with a Dana or Eaton hydro | 1 | |
| **75-135** | 37X88<br>037X88<br>037X88MA<br>710213 | 1/2" x 89-5/8" | **Premium Belt** – Blade Drive<br>Fits 42" hydro tractor | 1 | |
| **175-135** | | | **Belt** – Standard Version of 75-135 | | |
| **75-129** | 37X89<br>037X89<br>037X89MA<br>710217 | 1/2" x 87-3/8" | **Premium Belt** – Blade Drive<br>For 46" deck on LT tractor | 1 | |

| OREGON | Replaces | Size | Description | Type | Product Code |
|---|---|---|---|---|---|
| **Murray** | | | | | |
| **75-210** | 37X92<br>037X92<br>037X92MA | 1/2" x 53-1/8" | **Premium Belt** – Secondary Mower Deck<br>For 48", 50", & 52" decks on LT rail frame tractors & 52" GT tractors | 2 | |
| **75-267** | 37X93<br>037X93<br>037X93MA | 5/8" x 109-5/16 | **Premium Belt** – Blade Drive<br>For 48", 50", & 52" decks | 1 | |
| **75-964** | 37X96<br>037X96<br>037X96MA | 1/2" x 88-5/8" | **Premium Belt** – Blade Drive<br>For 46" deck on GT rail frame series | 1 | |
| **75-368** | 37X98<br>37X100MA | 3/4" x 34-9/16" | **Premium Belt** – Torque Converter<br>For go-karts | 6 | |
| **75-204** | 37X100 | 3/8" x 34-1/4" | **Premium Belt** – Drive<br>For 22" front drive self-propelled 3-in-1 mower with Briggs & Stratton or Tecumseh Magnum Torque engine with double idler (1999 & newer) | 1 | |
| **75-996** | 37X101<br>37X101MA | 3/8" x 34-1/4" | **Premium Belt** – Drive<br>For 22" side discharge, front wheel drive self-propelled mower with Tecumseh engine | 2 | |
| **75-679** | 37X110<br>37X110MA<br>MU37X110<br>MU37X110MA | 1/2" x 43-7/8" | **Premium Belt** – Motion Drive<br>For rear engine riders with 30" cut deck | 1 | |
| **Noma (also refer to Dynamark)** | | | | | |
| **15-654** | 33125 | 1/2" X 87-7/8" | **Premium Belt** | 7 | |
| **15-655** | 3526 | 1/2" X 30-1/4" | **Premium Belt** | 7 | |
| **15-657** | 45186 | 1/2" X 62-7/8" | **Premium Belt** | 7 | |
| **15-659** | 49878 | 5/8" X 83-7/16" | **Premium Belt** | 7 | |
| **15-660** | 57556 | 1/2" X 89-1/2" | **Premium Belt** | 1 | |
| **15-649** | 300575 | 1/2" X 34-1/16" | **Premium Belt** | 1 | |
| **75-136** | 300680P | 5/8" x 77-3/16" | **Premium Belt** – Deck Drive<br>For 38", 39", & 45" deck, fits Eagle Star | 2 | |
| **75-137** | 300842 | 5/8" x 78-3/16" | **Premium Belt** – Blade<br>Fits 39" mower series 3912–1500, 1600, 2200, & 2201 | 2 | |
| **75-214** | 301935P | 1/2" x 108-1/2" | **Premium Belt** – Blade<br>For 42" deck | 2 | |
| **15-650** | 302289 | 21/32" X 74-1/16" | **Premium Belt** | 7 | |
| **15-651** | 303241 | 1/2" X 90" | **Premium Belt** | 1 | |

# Belts

| OREGON | Replaces | Size | Description | Type | Product Code |
|---|---|---|---|---|---|
| **Noma (also refer to Dynamark)** | | | | | |
| **15-652** | 305148 | 21/32" X 83-5/16" | **Premium Belt** | 1 | |
| **15-653** | 308701 | 21/32" X 80-1/8" | **Premium Belt** | 7 | |
| **75-138** | 314108P | 5/8" x 86-1/4" | **Premium Belt** – Blade<br>Fits 43" cut models D4314-060, D4315-000, & D4318-060 | 1 | |
| **75-934** | 314120 | 1/2" x 87-1/4" | **Premium Belt** | 1 | |
| **75-289** | 319596 | 6-rib x 35-3/16" | **Premium Belt** – Auger<br>For all 3 & 4.5 HP snow throwers, 6V poly rib | 3 | |
| **75-977** | 321205 | 5/8" x 97-1/2". | **Premium Belt** – Drive | 1 | |
| **75-168** | 43066 | 5/8" x 71-1/4" | **Premium Belt**<br>For 36" cut, side discharge | 1 | |
| **75-179** | 48044 | 5/8" x 82-1/8" | **Premium Belt** – Blade Drive<br>For 36" cut, rear discharge | 2 | |
| **75-142** | 57214P | 1/2" x 85-1/4" | **Premium Belt** – Transmission<br>For 38", 39", & 45" mowers | 1 | |
| **75-143** | 58170 | 5/8" x 75-5/16" | **Premium Belt**<br>For 36" & 45" side discharge decks | 1 | |
| **Partner** | | | | | |
| **15-661** | 506070504 | 3/8" X 36-7/16" | **Premium Belt**<br>Fits K950 (16") | 7 | |
| **15-662** | 506070507 | 3/8" X 39-13/16" | **Premium Belt**<br>Fits K1250 | 7 | |
| **75-711** | 506 03 30-31 | 1/4" x 31-5/8" | **Premium Belt** – Cogged V<br>Fits K650 Active, K650 Active II, & K700 Active II cut-off saws | 6 | |
| **75-724** | 506 07 05-03 | 3/8" x 34-5/8" | **Premium Belt** – Cogged V<br>Fits K950 cut-off saws with 12" & 14" blades | 6 | |
| **75-713** | 506 07 05-06 | 3/8" x 31-5/16" | **Premium Belt** – Cogged V<br>Fits K650 Active III & K7000 Active III cut-off saws | 6 | |
| **75-712** | 506 29 67-02 | 6-rib x 32-1/2" | **Premium Belt** – Multi-Ribbed<br>Fits K750 cut-off saws | 3 | |
| **Polaris ATV** | | | | | |
| **15-663** | 3211077 | 1-3/16" X 41-3/8" | **Premium Belt** – Variable Speed | 7 | |

B

| OREGON | Replaces | Size | Description | Type | Product Code |
|---|---|---|---|---|---|
| **Poulan Pro** | | | | | |
| **15-664** | PP12001<br>531307215 | 1/2" X 88-1/4" | **Premium Belt** | 1 | |
| **15-665** | PP12002<br>532138255 | 1/2" X 95-3/8" | **Premium Belt** | 1 | |
| **15-667** | PP12012<br>531307218 | 1/2" X 95" | **Premium Belt** | 1 | |
| **15-668** | PP13006<br>531307219 | 3/8" X 31-15/16" | **Premium Belt** | 7 | |
| **15-669** | PP13007<br>575936701 | 21/32" X 90-1/16" | **Premium Belt** | 1 | |
| **15-670** | PP13008<br>575936801 | 21/32" X 89-1/16" | **Premium Belt** | 1 | |
| **15-672** | PP13010<br>575936901 | 1/2" X 83" | **Premium Belt** | 1 | |
| **15-673** | PP13011<br>575937001 | 21/32" X 143-3/8" | **Premium Belt** | 2 | |
| **Power Trim** | | | | | |
| **75-010** | 339 | 1/2" x 28-1/4" | **Premium Belt**<br>For edgers | 1 | |
| **15-001** | | 1/2" x 27-5/8" | **Premium Belt**<br>For wheeled edgers | 2 | |
| **15-002** | 339-1 | 1/2" x 28-3/8" | **Premium Belt** – Cogged<br>For wheeled edgers | 6 | |
| **Roper** | | | | | |
| **15-688** | 102655X | 1/2" X 38" | **Premium Belt** – Impeller Drive<br>For 2-stage snow throwers | 2 | |
| **15-691** | 106863X<br>108597X | 1/2" X 92" | **Premium Belt** – Deck Drive<br>For garden tractors with 44" decks (1999 & earlier) | 2 | |
| **15-693** | 111924X<br>532111924 | 3/8" X 31-3/4" | **Premium Belt** – Ground Drive<br>For 20" self-propelled mowers (1999 & earlier) | 7 | |
| **15-695** | 124293X<br>532124293X | 1/2" X 79-9/16" | **Premium Belt** – Deck Drive<br>For lawn tractors with 36" decks (1999 & earlier) | 1 | |
| **15-700** | 141416<br>532141416<br>917532141416 | 1/2" X 83-3/4" | **Premium Belt** – Ground Drive<br>For lawn tractors (1995–1999) | 1 | |
| **15-704** | 165555<br>53216555 | 1/2" X 108-1/16" | **Premium Belt** – Deck DriveAA<br>For rear discharge 36" lawn tractors (1999 & earlier) | 4 | |

# Belts

| OREGON | Replaces | Size | Description | Type | Product Code |
|---|---|---|---|---|---|
| **Roper** | | | | | |
| **15-705** | 165631<br>532165631<br>917532165631 | 1/2" X 111-1/16" | **Premium Belt** | 1 | |
| **15-708** | 169178<br>532169178 | 1/2" X 114-9/16" | **Premium Belt** – Deck DriveAA<br>For rear discharge 42" lawn tractors (1999 & earlier) | 4 | |
| **15-711** | 170140<br>532170140<br>917532170140 | 1/2" X 112-11/16" | **Premium Belt** – Ground Drive<br>For rear discharge lawn tractors (2006–2012) | 1 | |
| **15-712** | 179092<br>532179092 | 1/2" X 34-1/2" | **Premium Belt** – Ground Drive<br>For 2-stage snow throwers (2002–2004) | 7 | |
| **15-715** | 917532062828<br>62828 | 1/2" X 69" | **Premium Belt** – Deck Drive<br>For lawn tractors with 36" decks (1999 & earlier) | 1 | |
| **15-716** | 74977 | 3/8" X 35-3/4" | **Premium Belt** | 2 | |
| **15-717** | 850053<br>532850053 | 3/8" X 38-5/16" | **Premium Belt** – Ground Drive<br>For 20" self-propelled mower (1999 & earlier) | 7 | |
| **15-718** | 88074 | 3/8" X 39-1/4" | **Premium Belt** | 2 | |
| **15-719** | 9180R | 1/2" X 41" | **Premium Belt** | 2 | |
| **Scag** | | | | | |
| **75-036** | A48083 | 5/8" x 88-7/8" | **Premium Belt** – Engine to Blade<br>For 61" cut on models with 18 HP Briggs & Stratton | 2 | |
| **15-674** | 48084 | 21/32" X 135-7/8" | **Premium Belt** – Spindle Drive | 4 | |
| **75-154** | 48087 | 5/8" x 53-3/8" | **Premium Belt** – Blade to Blade<br>For SW / SLM48 | 2 | |
| **75-155** | 48088 | 5/8" x 103-3/8" | **Premium Belt** – Engine to Blade<br>For SLM48 | 1 | |
| **75-055** | 48089 | 5/8" x 89-1/4" | **Premium Belt** – Deck Drive<br>For 48" mid-sized mowers | 2 | |
| **75-260** | 48202 | 1-1/8"(2V) x 51-1/4" | **Premium Belt** – Wheel Drive | 5 | |
| **75-043** | 48203 | 1/2" x 40-1/4" | **Premium Belt** – Transmission<br>For all gearbox units | 1 | |
| **75-054** | 48204 | 5/8" x 82-5/16" | **Premium Belt** – Blade to Blade<br>For 36" walk-behind | 1 | |
| **15-680** | 48207 | 21/32" X 86-1/2" | **Premium Belt**<br>For mowers with SM-61 decks | 1 | |
| **75-058** | A48286 | 5/8" x 93-1/4" | **Premium Belt** – Deck Drive<br>For 52" cut | 2 | |

B

## Scag

| OREGON | Replaces | Size | Description | Type | Product Code |
|---|---|---|---|---|---|
| **75-047** | 48265 | 5/8" x 63-1/8" | **Premium Belt** – Right Blade Drive<br>For 61" cut | 1 | |
| **75-048** | 48285 | 5/8" x 56-1/8" | **Premium Belt** – Right Blade Drive<br>For 52" cut | 2 | |
| **15-682** | 48553 | 1/2" X 50-3/8" | **Premium Belt** – Pump Drive | 7 | |
| **75-052** | 48587 | 1/2" x 57-1/4" | **Premium Belt** – Hydro Pump Drive | 1 | |
| **15-683** | 48607 | 1/2" X 134-3/8" | **Premium Belt** – Deck Drive<br>Fits STG-18KH & STHN-20HK models with SM-61 deck | 2 | |
| **75-904** | 48799 | 5/8" x 114-13/16" | **Premium Belt** – Blade Drive | 2 | |
| **15-684** | 48854 | 1/2" X 42-9/16" | **Premium Belt** – Pump Drive<br>Fits SM & STHM models | 7 | |
| **75-044** | 48912 | 5/8" x 117-5/8" | **Premium Belt** – Engine to Blade<br>Fits 61" deck with 20 & 22 HP Kohler engines, models STHM20 & STHM22 | 1 | |
| **75-370** | 48996 | 5/8" x 135-3/8" | **Premium Belt** – Blade Drive<br>For 61" ZTR, wide area walk-behind mowers | 2 | |
| **15-677** | 481498 | 1/2" X 41-1/2" | **Premium Belt** – LH Transmission Drive<br>Fits STR-20CH & STR-22CH | 7 | |
| **15-678** | 481499 | 1/2" X 33-7/8" | **Premium Belt** – RH Transmission Drive<br>Fits STR-20CH & STR-22CH | 7 | |
| **15-679** | 481980 | 21/32" X 162-3/8" | **Premium Belt** – Deck Drive<br>Fits Turf Tiger & Sabre Tooth Tiger models with 72" decks | 2 | |
| **15-681** | 482137 | 21/32" X 117-1/8" | **Premium Belt** – Deck Drive<br>Fits Tiger Cub models with 48" decks | 1 | |
| **75-715** | 481749 | 1/2" x 59-3/8" | **Premium Belt** – Pump Drive<br>For Turf Tigers | 1 | |
| **75-215** | 481460 | 5/8" x 43-1/4" | **Premium Belt** – Deck Drive | 6 | |
| **75-268** | 481461 | 1/2" x 61-3/8" | **Premium Belt** – Hydro Pump Drive<br>For Turf Tiger | 1 | |
| **75-270** | 481557 | 5/8" x 123-5/16" | **Premium Belt** – Blade to Blade<br>For 52" Turf Tiger | 1 | |
| **75-216** | 481558 | 5/8" x 140-1/8" | **Premium Belt** – Deck Drive | 1 | |
| **75-625** | 482090 | 5/8" x 106-3/4" | **Premium Belt** – Deck Drive (wrapped)<br>Fits Tiger Cub 40 | 1 | |
| **75-681** | 482281 | 5/8" x 120-1/8" | **Premium Belt** – Deck<br>For Turf Tiger with 52" deck | 1 | |
| **75-682** | 482529 | 5/8" x 147-7/8" | **Premium Belt** – Deck<br>For Tiger Cub with 48" deck | 1 | |

# Belts

| OREGON | Replaces | Size | Description | Type | Product Code |
|---|---|---|---|---|---|
| **Scag** | | | | | |
| **75-629** | 482530 | 5/8" x 155" | **Premium Belt** – Deck (wrapped)<br>Fits Wildcat 52A | 1 | |
| **75-631** | 482652 | 5/8" x 175-3/4" | **Premium Belt** – Deck (wrapped)<br>Fits Wildcat 61A | 1 | |
| **75-632** | 482716 | 1/2" x 61-15/16" | **Premium Belt** – Hydraulic<br>Fits Wildcat 61A, raw edge | 1 | |
| **15-046** | 482876 | 5/8" x 44" | **Premium Belt** – Deck<br>For Turf Tiger | 6 | |
| **75-634** | 483001 | 5/8" x 132-1/2" | **Premium Belt** – Deck (wrapped)<br>Fits Z Cat 36A | 1 | |
| **75-635** | 483002 | 5/8" x 149-3/8" | **Premium Belt** – Deck (wrapped)<br>Fits Z Cat 42A | 1 | |
| **75-637** | 483157 | 5/8" x 65-3/16" | **Premium Belt** – Deck (cogged)<br>Fits Wildcat 61A, Wildcat 61V, & Tiger Cub 61V, raw edge | 6 | |
| **15-045** | 483166<br>483086 | 5/8" x 81-1/2" | **Premium Belt** – Pump Drive<br>For Turf Tiger | 6 | |
| **75-641** | 483172 | 5/8" x 65-7/8" | **Premium Belt** – Hydraulic (cogged)<br>Fits Wildcat 52A, Wildcat 61A, Wildcat 52V, Wildcat 61V, Tiger Cub 48V, Tiger Cub 52V, & Tiger Cub 61V, raw edge | 6 | |
| **75-642** | 483239 | 5/8" x 50-1/4" | **Premium Belt** – Deck (cogged)<br>Fits Tiger Cub 48V, raw edge | 6 | |
| **75-644** | 483241 | 5/8" x 117-1/2" | **Premium Belt** – Deck Drive (wrapped)<br>Fits Tiger Cub 48V | 1 | |
| **75-645** | 483242 | 5/8" x 125-1/2" | **Premium Belt** – Deck (wrapped)<br>Fits Wildcat 52V, Wildcat 52A, & Tiger Cub 52V | 1 | |
| **75-646** | 483243 | 5/8" x 135-3/4" | **Premium Belt** – Deck Drive (wrapped)<br>Fits Wildcat 61A, Wildcat 61V, & Tiger Cub 61V | 1 | |
| **75-648** | 483325 | 5/8"x 141" | **Premium Belt** – Deck (wrapped)<br>Fits Freedom Z 48 | 1 | |
| **75-649** | 483326 | 5/8" x 148-5/8" | **Premium Belt** – Deck (wrapped)<br>Fits Freedom Z 52 | 1 | |
| **15-134** | 483741 | 5/8" x 137" | **Premium Belt** – Deck Drive<br>Fits some 61V Cheetah & Turf Tiger decks | 1 | |
| **15-135** | 484088 | 5/8" x 152" | **Premium Belt** – Deck Drive<br>Fits some 72V Cheetah & Turf Tiger decks | 1 | |
| **15-136** | 484159 | 5/8" x 77" | **Premium Belt** – RH Deck Drive<br>Fits some 61V & 72V Cheetah & Turf Tiger decks | 6 | |

| OREGON | Replaces | Size | Description | Type | Product Code |
|---|---|---|---|---|---|
| **Scotts** | | | | | |
| **15-685** | 710532 | 1/2" X 53" | **Premium Belt** | 2 | |
| **15-686** | 710533 | 21/32" X 109-3/8" | **Premium Belt** | 1 | |
| **Sears / Craftsman** | | | | | |
| **15-688** | 102655X | 1/2" X 38" | **Premium Belt** – Impeller Drive<br>For 2-stage snow throwers | 2 | |
| **15-691** | 106863X<br>108597X | 1/2" X 92" | **Premium Belt** – Deck Drive<br>For garden tractors with 44" decks (1999 & earlier) | 2 | |
| **15-693** | 111924X<br>532111924 | 3/8" X 31-3/4" | **Premium Belt** – Ground Drive<br>For 20" self-propelled mowers (1999 & earlier) | 7 | |
| **15-695** | 124293X<br>532124293X | 1/2" X 79-9/16" | **Premium Belt** – Deck Drive<br>For lawn tractors with 36" decks (1999 & earlier) | 1 | |
| **15-700** | 141416<br>532141416<br>917532141416 | 1/2" X 83-3/4" | **Premium Belt** – Ground Drive<br>For lawn tractors (1995–1999) | 1 | |
| **15-704** | 165555<br>53216555 | 1/2" X 108-1/16" | **Premium Belt** – Deck DriveAA<br>For rear discharge 36" lawn tractors (1999 & earlier) | 4 | |
| **15-705** | 165631<br>532165631<br>917532165631 | 1/2" X 111-1/16" | **Premium Belt** – Transmission Gear<br>For lawn tractors (1999 & earlier) | 1 | |
| **15-708** | 169178<br>532169178 | 1/2" X 114-9/16" | **Premium Belt** – Deck DriveAA<br>For rear discharge 42" lawn tractors (1999 & earlier) | 4 | |
| **15-711** | 170140<br>532170140<br>917532170140 | 1/2" X 112-11/16" | **Premium Belt** – Ground Drive<br>For rear discharge lawn tractors (2006–2012) | 1 | |
| **15-712** | 179092<br>532179092 | 1/2" X 34-1/2" | **Premium Belt** – Ground Drive<br>For 2-stage snow throwers (2002–2004) | 7 | |
| **15-715** | 917532062828<br>62828 | 1/2" X 69" | **Premium Belt** – Deck Drive<br>For lawn tractors with 36" decks (1999 & earlier) | 1 | |
| **15-716** | 74977 | 3/8" X 35-3/4" | **Premium Belt** | 2 | |
| **15-717** | 850053<br>532850053 | 3/8" X 38-5/16" | **Premium Belt** – Ground Drive<br>For 20" self-propelled mower (1999 & earlier) | 7 | |
| **15-718** | 88074 | 3/8" X 39-1/4" | **Premium Belt** | 2 | |
| **15-719** | 9180R | 1/2" X 41" | **Premium Belt** | 2 | |
| **15-052** | 954-04201A | 3/8" x 36" | **Premium Belt** – Snow Thrower Wheel Drive<br>Fits models 247.88791, 247.88830, & 247.888301 (2009–2011) | 1 | |

# Belts

| OREGON | Replaces | Size | Description | Type | Product Code |
|---|---|---|---|---|---|
| **Simplicity** | | | | | |
| **15-724** | 1657044<br>71657044<br>1657044-2<br>1657044SM | 1/2" X 93" | **Premium Belt** – Spindle Drive<br>For tractors with 48" decks | 2 | |
| **15-729** | 1670835<br>71670835<br>1670835SM | 1/2" X 78-1/2" | **Premium Belt** – Pump Drive<br>Fits tractor models 4211H, 4212H, 611H, & 612H | 2 | |
| **15-731** | 1665638<br>1703466<br>1665638SM<br>1703466SM | 1/2" X 126-1/16" | **Premium Belt** – Deck Drive<br>For 48" decks with shallow-groove pulley | 2 | |
| **15-732** | 1703836 | 1/2" X 91-1/16" | **Premium Belt** – Spindle Drive<br>For 50" decks | 2 | |
| **15-733** | 1666698<br>1716854<br>71666698<br>1666698SM<br>1716854SM | 1/2" X 90-9/16" | **Premium Belt** – Transmission Drive<br>For tractors with gear transaxle | 1 | |
| **15-734** | 1718017<br>1718017SM | 1/2" X 114-1/4" | **Premium Belt** – Spindle Drive<br>For tractors with 44" decks | 1 | |
| **15-735** | 163011<br>1722039SM | 1/2" X 71-5/16" | **Premium Belt** – Spindle Drive<br>For tractors with 54" decks | 1 | |
| **75-371** | 1668066<br>1668066SM | 1/2" x 119-3/4" | **Premium Belt** – Blade<br>Fits 5000 & 6000 series tractors with 42" deck | 2 | |
| **75-372** | 1713515<br>1713515SM | 1/2" x 78-1/8" | **Premium Belt** – Engine to Deck<br>Fits 7100 series & Allis Chalmers 900 series | 1 | |
| **75-218** | 1713549<br>1713549SM | 1/2" x 70-1/8" | **Premium Belt** – Drive<br>For Homesteader 6 HP model (1971–1974), 30" Yoeman tiller, 36" rotary mower arbor drive, & Broadmoor 5000 & 3008 series | 1 | |
| **Sitrex** | | | | | |
| **15-737** | SM31150 | 21/32" X 70-13/16" | **Premium Belt** | 2 | |
| **Snapper** | | | | | |
| **15-739** | 14398<br>7014398<br>7014398YP | 1/2" X 134-3/8" | **Premium Belt** – Deck Drive<br>Fits models LT11000 & LT11001 with 41" decks | 2 | |
| **15-740** | 14799<br>7014799<br>7014799YP | 1/2" X 103" | **Premium Belt** – Deck Drive<br>For mowers with 33", 38", 41", & 42" decks | 2 | |

B

## Snapper

| OREGON | Replaces | Size | Description | Type | Product Code |
|---|---|---|---|---|---|
| **15-741** | 14800<br>1-4800<br>7014800<br>7014800YP | 1/2" X 138-9/16" | **Premium Belt** – Deck Drive<br>For garden tractor with 41" & 42" decks | 2 | |
| **15-742** | 17053<br>7017053<br>7017053YP | 1-1/4" X 54-1/2" | **Premium Belt** | 5 | |
| **15-744** | 23416<br>7023416<br>7023416YP | 3/8" X 30-3/4" | **Premium Belt** | 7 | |
| **15-746** | 24497<br>2-4497<br>1-4525<br>7024497<br>7024497YP | 1/2" X 107-9/16" | **Premium Belt** | 4 | |
| **15-748** | 24618<br>7024618<br>7024618YP | 3/8" X 34-1/8" | **Premium Belt** | 7 | |
| **15-749** | 26305<br>7026305<br>7026305YP | 1/2" X 53-3/8" | **Premium Belt** | 1 | |
| **15-750** | 27346<br>7027346<br>7027346YP | 21/32" X 92-13/16" | **Premium Belt** | 2 | |
| **15-751** | 27347<br>7027347<br>7027347YP | 21/32" X 55-13/16" | **Premium Belt** | 2 | |
| **15-753** | 28051<br>7028051<br>7028334SM | 1/2" X 94-5/16" | **Premium Belt** | 1 | |
| **15-756** | 29101<br>7013938<br>7029101<br>7029101YP | 3/8" X 36-3/16" | **Premium Belt** | 7 | |
| **15-760** | 29641<br>7025042<br>7029641<br>7029641YP | 1/2" X 97-11/16" | **Premium Belt** | 1 | |
| **15-761** | 29907<br>7022541<br>7024511<br>7029907<br>7029907YP | 21/32" X 91-5/16" | **Premium Belt** | 1 | |
| **15-762** | 35710<br>7029255<br>7035710<br>7035710YP | 21/32" X 85-1/16" | **Premium Belt** | 2 | |

# Belts

## Snapper

| OREGON | Replaces | Size | Description | Type | Product Code |
|---|---|---|---|---|---|
| **15-763** | 36585<br>7036585<br>7075235YP | 1/2" X 94-9/16" | **Premium Belt** | 1 | |
| **15-764** | 42735<br>7029269<br>7042735<br>7042735YP | 21/32" X 74-1/16" | **Premium Belt** | 2 | |
| **15-765** | 42813<br>7042813<br>7042813YP | 21/32" X 68" | **Premium Belt** | 2 | |
| **15-766** | 43844<br>7043844<br>7043844YP | 1/2" X 74-9/16" | **Premium Belt** | 4 | |
| **15-767** | 44637<br>7028619<br>7044637<br>7044637YP | 21/32" X 75-5/16" | **Premium Belt** | 1 | |
| **15-768** | 5023256<br>5100881<br>5023256SM | 1/2" X 151-5/16" | **Premium Belt** | 1 | |
| **15-769** | 62465<br>7062465<br>7062465YP | 1/2" X 82" | **Premium Belt** | 1 | |
| **15-771** | 79181<br>7079181<br>7079181YP | 1/2" X 52-13/16" | **Premium Belt** | 4 | |
| **15-773** | 79776<br>7079776<br>7079776YP | 1/2" X 72-51/16" | **Premium Belt** | 2 | |
| **15-774** | 79779<br>7079779<br>7079779YP | 21/32" X 84-15/16" | **Premium Belt** | 2 | |
| **15-776** | 79781<br>7079781<br>7079781YP | 21/32" X 84-5/16" | **Premium Belt** | 2 | |
| **75-068** | 1-0749<br>10749<br>7010749 | 1/2" x 71-7/16" | **Premium Belt**<br>For most 25", 26", 28", & 30" cut decks, rear engine riders | 4 | |
| **175-068** | | | **Belt** – Standard Version of 75-068 | | |
| **75-059** | 1-1117<br>11117<br>7011117 | 6-rib x 20-3/8" | **Premium Belt** – Self-propelled<br>Fits V21 series cast decks - 6-rib | 3 | |

B

## Snapper

| OREGON | Replaces | Size | Description | Type | Product Code |
|---|---|---|---|---|---|
| **75-353** | 1-2353<br>12353<br>7012353 | 3/8" x 25-1/2" | **Premium Belt** – Engine Drive<br>Fits 21PC commercial series, steel deck series 6, 7, 8, 9, & 0, & commercial series 0, 7, & 9 | 6 | |
| **75-354** | 1-2354<br>12354<br>7012354 | 4-rib x 22-1/2" | **Premium Belt** – Transmission<br>Fits 21P steel deck & V-21 self-propelled mowers | 3 | |
| **75-508** | 1-2508<br>12508<br>7012508<br>7011887 | 3/8" x 25" | **Premium Belt** – Engine Drive<br>Fits all 21P standard mowers & most V21 series with 3-1/2 & 4 HP engines | 1 | |
| **75-105** | 1-4525<br>14525<br>7014525<br>7024497 | 1/2" x 108-1/4" | **Premium Belt**<br>For 41" deck on rear rider & 48" deck on tractors | 4 | |
| **175-105** | | | **Belt** – Standard Version of 75-105 | | |
| **75-219** | 2-4891<br>24891<br>7024891 | 1-1/8" x 51-3/4" | **Premium Belt** – Transmission to Wheel<br>Fits Pro 7 series 36", 48", & 52" decks | 5 | |
| **75-073** | 1-8236<br>18236<br>128598<br>22252<br>7018236<br>7022252 | 1/2" x 74-1/8" | **Premium Belt**<br>For 33" cut, new style 30" riders | 4 | |
| **175-073** | | | **Belt** – Standard Version of 75-073 | | |
| **75-036** | 7-6496<br>76496<br>7076496 | 5/8" x 88-7/8" | **Premium Belt** – Engine to Blade<br>For 61" cut deck model with 18 HP Briggs & Stratton engine | 2 | |
| **75-221** | 7-6497<br>76497<br>7076497 | 5/8" x 44-5/16" | **Premium Belt** – Wheel (cogged)<br>For all early models | 6 | |
| **75-058** | 7-6677<br>76677<br>7076677 | 5/8" x 93-1/4" | **Premium Belt**<br>For 48" blade drive | 2 | |
| **75-240** | 7-6680<br>76680<br>7076680 | 5/8" x 35-1/4" | **Premium Belt** – Transmission<br>For 48" deck, series 0 & 1 | 2 | |
| **75-727** | 2-9604<br>29604<br>7029604 | 3/8" x 33" | **Premium Belt** – V<br>Fits 3200 series snow throwers | 1 | |

# Belts

| OREGON | Replaces | Size | Description | Type | Product Code |
|---|---|---|---|---|---|
| **Stihl** | | | | | |
| **15-780** | 94900007850 | 3/8" X 34-3/16" | **Premium Belt** | 7 | |
| **15-781** | 94900007851 | 3/8" X 34-1/2" | **Premium Belt** | 7 | |
| **15-782** | 94900007891 | 3/8" X 36-7/16" | **Premium Belt** | 7 | |
| **15-783** | 94900007900A | 7/16" X 32-3/8" | **Premium Belt** | 3 | |
| **15-784** | 94900007901A | 7/16" X 29-3/8" | **Premium Belt** | 3 | |
| **15-785** | 94900007915 | 9/16" X 39-5/8" | **Premium Belt** | 3 | |
| **15-786** | 94900007920 | 9/16" X 37" | **Premium Belt** | 3 | |
| **75-272** | 9490-000-7850 | 3/8" x 33-3/4" | **Premium Belt** – Drive<br>Fits TS350 cut off saw | 6 | |
| **75-273** | 9490-000-7851 | 3/8" x 34-7/16" | **Premium Belt** – Drive<br>Fits TS400 cut off saw | 6 | |
| **Toro** | | | | | |
| **15-788** | 102742<br>94-2501 | 1/2" X 103" | **Premium Belt** – Deck Drive<br>Fits 260, XT, 5xi series with 52" decks<br>Fits 300 series GT classic tractors with 42" & 48" decks | 2 | |
| **15-789** | 104-6397 | 1/2" X 107-1/2" | **Premium Belt** – Spindle Drive<br>Fits mid-size ProLine mowers with 52" decks (2001–2007) | 4 | |
| **15-790** | 104-6398 | 21/32" X 75-3/16" | **Premium Belt** – PTO to Deck Drive<br>Fits mid-size ProLine mowers with 52" decks (2001) | 1 | |
| **15-791** | 104-8152 | 1-3/16" X 49" | **Premium Belt** – Wheel Drive<br>Fits mid-size ProLine mowers (2001) | 5 | |
| **15-792** | 106125 | 1/2" X 88-5/8" | **Premium Belt** – Spindle Drive<br>For 42" rear discharge decks (1980–2014) | 2 | |
| **15-794** | 110-6774 | 1/2" X 62-1/8" | **Premium Belt** – Hydro Transmission Drive<br>Fits TimeCutter Z4200, Z4202, Z4235, Z5000, Z5020, Z5030, Z5035, Z5040, & Z5060 (2007–2010) | 7 | |
| **15-795** | 110-6892 | 1/2" X 140-1/2" | **Premium Belt** – Deck Drive<br>Fits TimeCutter Z5000, Z5020, Z5030, Z5035, Z5040, & Z5060 with 50" decks (2007–2010) | 2 | |
| **15-797** | 114202<br>114202-09 | 1/2" X 125" | **Premium Belt** – PTO to Deck Drive<br>Fits 50" 78445 & 60" 48475 side discharge decks (1993–1995) | 7 | |
| **15-798** | 1594 | 1/2" X 107-1/16" | **Premium Belt** – Spindle Drive<br>For 42" side discharge decks (1970–1990) | 2 | |
| **15-799** | 21-0890 | 21/32" X 71-13/16" | **Premium Belt** – Spindle Drive<br>For 72" 30721 side discharge decks (1970–1987) | 2 | |
| **15-800** | 44-8990 | 3/8" X 33-5/8" | **Premium Belt** – PTO Drive<br>Fits Groundmaster 200 series (1983–1992) | 5 | |

B

## Toro

| OREGON | Replaces | Size | Description | Type | Product Code |
|---|---|---|---|---|---|
| **15-801** | 47-1410 | 1/2" X 47-7/8" | **Premium Belt** – Transmission Drive<br>For rear engine riders (1983–1992) | 1 | |
| **15-802** | 51-4291 | 1-3/16" X 45-7/8" | **Premium Belt** – Wheel Drive<br>Fits mid-size ProLine gear mowersbuilt 1998-2008 | 5 | |
| **15-803** | 106-4383<br>53-9660<br>23-1820 | 1-3/16" X 42-3/8" | **Premium Belt** – PTO Drive<br>Fits 72" 30721 side discharge decks (1985–1988) | 5 | |
| **15-804** | 55-7660 | 21/32" X 71-5/16" | **Premium Belt** – PTO Drive<br>Fits mid-size ProLine gear mowersbuilt 1988-1999 | 1 | |
| **15-805** | 57-0240 | 21/32" X 147-3/8" | **Premium Belt** – Spindle Drive<br>Fits GM 117/120/200/220, ProLine 118, Z Master Z255, Z256, Z259, Z286E, Z287L, & Z288E with 72" decks (1987–2003) | 4 | |
| **15-807** | 98-0710<br>67-1390 | 1/2" X 51" | **Premium Belt** – PTO Drive<br>For 8 HP rear engine riders with 25" decks (1989–2002) | 7 | |
| **15-809** | 93-8457<br>69-6220 | 21/32" X 136-9/16" | **Premium Belt** | 4 | |
| **15-810** | 74-1330 | 21/32" X 82-5/16" | **Premium Belt** – PTO Drive<br>Fits 62" 30162 side discharge decks (1990–1999) | 1 | |
| **15-812** | 82-2390 | 1/2" X 126-9/16" | **Premium Belt** – Spindle Drive<br>Fits 30148 48" recycler mowers (1991–1992) | 4 | |
| **15-813** | 82-4110 | 1/2" X 47" | **Premium Belt** – Pump Drive<br>Fits mid-size ProLine Hydro mowersbuilt 1991-2007 | 2 | |
| **15-814** | 82-6420 | 21/32" X 84-13/16" | **Premium Belt** – PTO to Deck Drive<br>Fits 30148 48" recycler mowers (1991–1992) | 1 | |
| **15-815** | 8411 | 1/2" X 77-1/16" | **Premium Belt** – Spindle Drive<br>For 36" side discharge decks (1968–1991) | 7 | |
| **15-820** | 92-5588 | 1/2" X 138-1/2" | **Premium Belt** – Spindle Drive<br>Fits 30569, 62" Guardian Recycler mower, Groundsmaster 200 series (2003–2004) | 4 | |
| **15-821** | 93-3884 | 21/32" X 130-1/8" | **Premium Belt** – Spindle Drive<br>Fits 44" side discharge mower, XL series lawn tractors (1995–2003) | 1 | |
| **15-824** | 98-3764 | 21/32" X 144-3/16" | **Premium Belt** – PTO to Deck Drive<br>Fits 74203, Z255 Z Master, with 62" SFS side discharge mower (1999) | 2 | |
| **15-825** | 98-3780 | 21/32" X 141-7/8" | **Premium Belt** – Spindle Drive<br>Fits 74501, Z16-44 & 74601, Z17-44 TimeCutter Z riding mowers (2001), & 100 series Z Master with 44" decks (1999–2006) | 2 | |
| **15-826** | 99-3904 | 21/32" X 158-9/16" | **Premium Belt** – Spindle Drive<br>Fits TimeCutter ZX riding mower with 52" decks (2001–2003)<br>Fits 100 series Z Master with 52" decks (1999–2004) | 1 | |

# Belts

## Toro

| OREGON | Replaces | Size | Description | Type | Product Code |
|---|---|---|---|---|---|
| **15-827** | 99-4627 | 21/32" X 147-9/16" | **Premium Belt** – PTO to Deck Drive<br>Fits 200 series Z Master with 72" side discharge decks (1999–2003) | 1 | |
| **15-828** | 99-4647 | 21/32" X 142-3/8" | **Premium Belt** – PTO to Deck Drive<br>Fits 200 series Z Master with 62" side discharge decks (1999–2003) | 1 | |
| **75-075** | 5-4505<br>3-7274 | 3/8" x 31-5/16" | **Premium Belt**<br>Fits all front wheel drive, self-propelled mowers | 2 | |
| **75-060** | 25-6430<br>23-7350 | 6-rib x 33-1/2" | **Premium Belt**<br>Fits Snowmaster models S200 & S620 – six rib | 3 | |
| **75-043** | 17-0850<br>23-9080<br>26-9670<br>26-9670-09<br>27-0230 | 1/2" x 40-1/4" | **Premium Belt** – Trans Drive<br>For 36", 44", & 52" commercial | 1 | |
| **15-051** | 26-9672 | 1/2" x 30-9/16" | **Premium Belt** – Snow Thrower Auger<br>Fits models 622, 622E, 622R, 722, & 724 (1993 & newer) | 8 | |
| **75-165** | 27-1160<br>271160-09 | 1/2 x 104-1/2" | **Premium Belt** – Blade to Blade<br>For 44" & 52" decks | 4 | |
| **75-980** | 37-9080 | 3/8" x 30" | **Premium Belt**<br>Fits models 421 & 521 snow throwers | 6 | |
| **75-373** | 44-6260 | 1/2" x 123-1/32" | **Premium Belt** – Deck<br>For 62" Groundsmaster | 4 | |
| **75-274** | 51-3530 | 1/2" x 51-1/4" | **Premium Belt** – Blade to Blade<br>For 36" deck | 1 | |
| **75-205** | 51-4290<br>51-4290-09 | 1-1/4"(2V) x 51-1/8" | **Premium Belt** – Drive Wheel<br>For 36", 48", & 52" walk-behind, commercial Proline, 2 groove | 5 | |
| **75-275** | 54-2750<br>54-2750-09 | 5/8" x 70-1/8" | **Premium Belt** – Engine to Deck<br>Fits 36" & 44" cut deck for Proline 30117, 30136, 30144, 30165, 30170, & 30180 | 2 | |
| **75-066** | 55-9300 | 6-rib x 34-7/16" | **Premium Belt**<br>Fits CCR2000 snow thrower (six-rib), Bolens 1737899, & Simplicity 1663885 | 3 | |
| **75-192** | 71-5381<br>71-5380 | 3/8" x 34-3/8" | **Premium Belt** – Drive<br>Fits CCR1000 snow throwers | 1 | |
| **75-225** | 75-9010 | 3/8" x 29-1/4" | **Premium Belt**<br>Fits Powerlite models | 8 | |
| **75-684** | 91-2258 | 3/8" x 35-1/4" | **Premium Belt** – Drive<br>For 22" mowers | 1 | |
| **75-939** | 95-6151 | 5-rib x 34-1/2" | **Premium Belt** – Snow thrower<br>Fits models CCR2400, CCR2450, CCR2500, CCR3000, CCR3600, & CCR3650 | 3 | |
| **75-888** | 106-7350 | 5/8" x 264-13/32" | **Premium Belt** – V<br>For mowers | 1 | |

B

## Toro

| OREGON | Replaces | Size | Description | Type | Product Code |
|---|---|---|---|---|---|
| **75-887** | 105-8783 | 5/8" x 242-13/32" | **Premium Belt** – V<br>For mowers | 1 | |
| **15-002** | 106-2174 | 1/2" x 28-3/8" | **Premium Belt** – Hydro Transmission<br>For TimeCutter Z models: 14-38Z (2003–2004), 16-42Z (2003–2004), 17-42Z (2003–2004), 18-44Z (2004), Z380 (2005–2007), Z420 (2005–2011), Z420T (2009–2011), Z480 (2005–2006), & Z530 (2006–2007) | 6 | |
| **15-016** | 106-7369 | 5/8''X 176'' | **Premium Belt** – Deck Drive<br>For Z Master mowers with 48" & 52" cut, Turbo Force, & 7-gauge side discharge decks | 1 | |
| **15-137** | 108-2693 | 5/8" x 82" | **Premium Belt** – Deck Drive<br>Fits commercial walk-behind mowers with 52" Turbo Force deck (2007–2012) | 1 | |
| **15-138** | 108-2694 | 1/2" x 111-1/2" | **Premium Belt** – Spindle Drive<br>Fits commercial walk-behind mowers with 52" Turbo Force deck (2007–2012) | 1 | |
| **15-139** | 108-2715 | 5/8" x 78-3/16" | **Premium Belt** – Deck Drive<br>Fits commercial walk-behind mowers with 48" Turbo Force deck (2007–2012) | 1 | |
| **15-140** | 108-2716 | 1/2" x 105-1/4" | **Premium Belt** – Spindle Drive<br>Fits commercial walk-behind mowers with 48" Turbo Force deck (2007–2012) | 1 | |
| **15-141** | 110-5049 | 1/2" x 47-3/8" | **Premium Belt** – Pump Drive<br>Fits commercial walk-behind mowers (2007–2012) | 1 | |
| **115-145** | 110-6871 | 1/2" x 112-3/4" | **Standard Belt** – Deck Drive<br>Fits riding mower models RZT420H (2008–2009), TimeCutter Z4200 (2007–2010), TimeCutter Z4220 (2008–2009), TimeCutter Z4235 (2010), & TimeCutter Z4202 (2008–2010) | 1 | |
| **15-049** | 114-0454 | 1/2" x 146-1/4" | **Premium Belt** – Deck<br>For Grand Stand mowers with 52" Turbo Force deck (2009–2011) | 1 | |
| **15-050** | 115-7426 | 5/8" x 183-5/8" | **Premium Belt** – Deck<br>For Z Master G3 mowers with 52" Turbo Force deck (2009–2011) | 1 | |
| **115-146** | 115-9613 | 1/2" X 75-1/2" | **Standard Belt** – Pump Drive<br>Fits Titan ZTR riding mower models ZX5000, ZX5400, ZX6050 (2009–2010), ZX6000 (2009), ZX4800, ZX5450, ZX6030 (2010), ZX5020 (2011), MX4880, MX5480, MX6080, ZX4820, ZX5420, & ZX6020 (2011–2013) | 6 | |
| **15-142** | 119-8819 | 1/2" x 113-1/2" | **Premium Belt** – Deck Drive<br>Fits 42" TimeCutter (2011–2012) | 1 | |
| **15-143** | 119-8820 | 1/2" x 141-1/4" | **Premium Belt** – Deck Drive<br>Fits 50" TimeCutter (2011–2012) | 1 | |
| **15-144** | 1-323744 | 5/8 X 49-3/8 | **Premium Belt** – Wheel Drive<br>Fits commercial walk-behind mowers (2002–2012) | 6 | |

# Belts

## Troy Bilt (also see MTD)

| OREGON | Replaces | Size | Description | Type | Product Code |
|---|---|---|---|---|---|
| **15-829** | 1185651 | 1/2" X 114-1/4" | **Premium Belt** | 2 | |
| **15-833** | 1744706<br>GW-1744706<br>GW-B1744706 | 1/4" X 33-7/16" | **Premium Belt** – Transmission Drive<br>11300 4HP-21" Vacu-Cut self-propelled | 7 | |
| **15-836** | 1755565<br>GW-1755565<br>GW-B1755565 | 3/8" X 41-7/8" | **Premium Belt**<br>Fits 11300 & 11301 4HP-21" Vacu-Cut self-propelled | 7 | |
| **15-837** | 1743875<br>1755537<br>1764007<br>GW-1764007<br>GW-B1755537 | 1/2" X 159-3/4" | **Premium Belt** – Deck Drive<br>Fits 30042SR 42" S.D. mower attachment | 7 | |
| **15-838** | 1755539<br>1764009<br>GW-1764009 | 21/32" X 155-7/8" | **Premium Belt** | 7 | |
| **15-839** | 1830258 | 21/32" X 79-1/16" | **Premium Belt** | 7 | |
| **75-685** | 1128-1 | 1/2" x 21-3/4" | **Premium Belt** – Tiller<br>For Horse models | 1 | |
| **75-686** | 9245 | 1/2" x 22-1/4" | **Premium Belt** – Drive<br>For Horse models | 1 | |
| **75-378** | 1770334 | 1/2" x 58-3/8" | **Premium Belt** – Blade<br>For 22" wide cut mowers | 2 | |
| **75-380** | 1902325 | 5/8" x 29-3/16" | **Premium Belt** – Drive<br>For Super Tomahawk II chipper shredders | 2 | |
| **75-278** | 1909404 | 1/2" x 24-1/4" | **Premium Belt** – Forward Drive | 1 | |
| **75-277** | T1769767 | 1/2 x 65-3/8" | **Premium Belt**<br>For 33" wide cut mowers (replaces 75-377) | 1 | |
| **15-052** | 954-04201A | 3/8" x 36" | **Premium Belt** – Snow Thrower Wheel Drive<br>Fits models Storm 2410, Storm 2620, Storm 2840, Storm 3090, &<br>Storm 3090XP (2009–2011) | 1 | |
| **15-053** | 954-04093 | 3/8" x 35-7/8" | **Premium Belt** – Self-Propel<br>Fits models 12AG836E, 12AG839E 12AV834Q, 12AV835Q, 12AV838Q, & 12AV839Q | 2 | |
| **15-054** | 954-04176A | 3/8" x 34-1/8" | **Premium Belt** – Self-Propel<br>Fits models 12AI832Q, 12AI836M, 12AI836N, 12AI865Q, 12AI867Q, 12AI839F, 12AI839G, 12AI83K, 12AI869F, 12AI869G, 12AI86K, 12AJ867Q, 12AJ836E, & 12AJ836G | 2 | |

B

| OREGON | Replaces | Size | Description | Type | Product Code |
|---|---|---|---|---|---|
| **Walker** | | | | | |
| **15-842** | 6231 | 3/8" X 35-7/8" | **Premium Belt** | 7 | |
| **15-843** | 7230 | 1-3/16" X 37-15/16" | **Premium Belt** | 5 | |
| **15-844** | 7234 | 3/8" X 28-3/8" | **Premium Belt** | 7 | |
| **15-845** | 7235 | 7/16" X 23-7/16" | **Premium Belt** | 7 | |
| **115-212** | 8230 | 1-3/16" x 41-1/4" | **Belt** – Standard Belt for PTO<br>Fits C & T models | 9 | |
| **Woods** | | | | | |
| **15-847** | 10676 | 21/32" X 161-7/8" | **Premium Belt** – Drive<br>Fits mid-mount & under-mount Allis-Chalmers B/C/CAL42<br>Also fits D7221-3 Mow'n Machine | 2 | |
| **15-848** | 10859 | 21/32" X 249-13/16" | **Premium Belt** – Drive<br>ForL306, L59 under-mount & mid-mount | 2 | |
| **15-849** | 10864 | 21/32" X 177-7/8" | **Premium Belt** – Drive<br>For 304K-1 under-mount & mid-mount & L42D10 under-mount & mid-mount | 2 | |
| **15-850** | 11466 | 21/32" X 256-1/2" | **Premium Belt** – Drive<br>For L306, L59, LU306 under-mount & mid-mount | 2 | |
| **115-217** | 13425 | 5/8" x 278-3/4" | **Belt** – Standard Belt for Deck Drive<br>Fits mid-mount mowers LU306ACWD, LU306U, L306AC/WD, L306H274, & L306U | | |
| **15-851** | 13453 | 21/32" X 266-1/2" | **Premium Belt** – Drive<br>For L306, L59, & LU306 under-mount & mid-mount | 2 | |
| **15-852** | 1469 | 1-3/16" X 136-1/2" | **Premium Belt** – Drive<br>For 42C-1, 42C-2, 42C-3, 42C-4, & 59CF-1 under-mount & mid-mount | 2 | |
| **15-853** | 15184 | 2-3/16" X 116-5/8" | **Premium Belt** – Spindle Drive<br>Fits C114-1 multi-spindle | 9 | |
| **15-854** | 15415 | 21/32" X 199-3/4" | **Premium Belt** – Spindle Drive<br>Fits RM372 rear-mount finish mower (02/04/99) | 2 | |
| **15-945** | 16099 | 1/2" X 138-9/16" | **Premium Belt** | 1 | |
| **15-856** | 18186 | 21/32" X 197-15/16" | **Premium Belt** – Drive<br>For 348K, 348MB, 348MF, 348SB, L306-BMC, L59BMC,<br>L59K18, L59KR17, & L59Y186 under-mount & mid-mount | 2 | |
| **15-858** | 18440 | 21/32" X 218-15/16" | **Premium Belt** – Drive<br>For 59LB, 59LB-1, L5915, & L59F15-1 under-mount & mid-mount | 2 | |
| **115-214** | 18879 | 5/8" x 133-1/2" | **Belt** – Standard Belt for Deck Drive<br>Fits finish mowers PRD7200, RD72, & RD7200 | | |
| **15-860** | 18990 | 1-3/8" X 167-7/8" | **Premium Belt** – Spindle Drive<br>Fits P990 & RM990 rear-mount finish mower | 9 | |
| **15-861** | 20644 | 21/32" X 71-5/16" | **Premium Belt** – Spindle Drive<br>Fits RDC54 & RD60 rear discharge, & RM550 rear-mount decks | 2 | |

# Belts

## Woods

| OREGON | Replaces | Size | Description | Type | Product Code |
|---|---|---|---|---|---|
| **15-863** | 21510W | 1/2" X 138-3/8" | **Premium Belt** – Spindle Drive<br>Fits SP59-1 rear-mount finish mower | 2 | |
| **15-864** | 23033 | 21/32" X 201-1/2" | **Premium Belt** – Drive<br>Fits 348F12-2, 348H234-1, 348MF2-1, 348MF-2, 348MF4-1, 348SBK-1, 348SBK-2, L306SBL-1, L59K61, L59K72, & L59SBL-1 under-mount & mid-mount | 2 | |
| **15-865** | 23560 | 1/2" X 155-13/16" | **Premium Belt** | 2 | |
| **15-867** | 23933 | 21/32" X 259-7/8" | **Premium Belt** – Drive<br>Fits L306 JD105, L306-H3, L306AC/54, L306B25, L306F172-1, L306F192, L59AC/WD, & L59U under-mount & mid-mount | 2 | |
| **15-868** | 23943 | 21/32" X 271-5/8" | **Premium Belt** – Drive<br>Fits L306AC/WD, L306D10, L306D12, L306D14, L306U, L59D10, & L59D12 under-mount & mid-mount | 2 | |
| **15-869** | 23990 | 21/32" X 234" | **Premium Belt** – Drive<br>Fits L306B27, L306GM4-1, L306H255, L306H284-1, L306H284-2, L306JD85, L306JD85-2, L306JD95, L306JD95-2, L306K28, L306W35, L59GM4-1, L59H284-1, L59H284-2, L59JD85, L59JD85-2, L59JD95, L59JD95-2, L59K260-1, L59K28, & L59W35 under-mount & mid-mount | 2 | |
| **15-870** | 24102 | 7/8" X 277-5/8" | **Premium Belt** – Spindle Drive<br>Fits RM306-1 rear-mount finish mower | 2 | |
| **15-871** | 2474 | 21/32" X 148-1/8" | **Premium Belt** – Drive<br>Fits 42G-1, 42G-2, 42G-3, & 42G-4 under-mount & mid-mount | 4 | |
| **15-872** | 26354 | 21/32" X 53" | **Premium Belt** – Drive<br>Fits RM42CF-1, RM42CO-1, & RM42LB-1 rear-mount finish mowers | 2 | |
| **15-873** | 26840 | 21/32" X 126-7/8" | **Premium Belt** – Drive<br>Fits RM48JD-1, RM48KB-1, RM48KB-E-1, RM48SB-1, RM48WH-1, & RM48YM-1 rear-mount finish mower | 2 | |
| **15-874** | 27652 | 21/32" X 141-7/8" | **Premium Belt** – Drive<br>Fits 42C-6 under-mount & mid-mount IH Farmall Cub | 2 | |
| **15-875** | 27875 | 21/32" X 209-13/16" | **Premium Belt** – Drive<br>Fits 348KB-1, 348KB-2, 348KBE-2, L59H244, L59H255, & L59K82 under-mount & mid-mount | 2 | |
| **15-938** | 27920 | 21/32" X 138-5/8" | **Premium Belt-Drive**<br>Fits FM72 Flail (set of 2) | 7 | |
| **15-876** | 28167 | 21/32" X 245-5/8" | **Premium Belt** – Drive<br>Fits L306 F10-2, L306GM2, & L59F10-2 under-mount & mid-mount | 2 | |
| **15-877** | 28975 | 21/32" X 105-1/2" | **Premium Belt** – Drive<br>Fits 9144, 9180 Turf Batwing, M1950K, M2050, M2250, M2560, M2760 Mow`n Machine (with 60" decks), & RM500 rear-mount finish mower | 2 | |

B

## Woods

| OREGON | Replaces | Size | Description | Type | Product Code |
|---|---|---|---|---|---|
| **15-878** | 29010 | 21/32" X 86-3/8" | **Premium Belt** – Drive<br>Fits 9144 Turf Batwing, M1950K, M2050, M2250, M2560, M2760 Mow`n Machine (with 50" & 52" decks), & RM400 rear-mount finish mower | 2 | |
| **15-879** | 29229 | 21/32" X 133-1/16" | **Premium Belt** – Drive<br>Fits RM600 rear-mount finish mower | 2 | |
| **15-881** | 29519 | 7/8" X 166" | **Premium Belt** | 2 | |
| **15-882** | 29523 | 21/32" X 143-5/8" | **Premium Belt** – Drive<br>Fits S260 Ditchbank (set of 2) | 2 | |
| **15-883** | 30435 | 21/32" X 286-7/16" | **Premium Belt** – Drive<br>Fits L306AC/WD & L306U under-mount & mid-mount | 2 | |
| **15-884** | 31615<br>1001244 | 21/32" X 118-13/16" | **Premium Belt** – Drive<br>Fits 7144RD, 9180RD, 9204RD Turf Batwing Mowers, RD6000, RD7200, RD8400, & RM48CO-2 rear-mount finish mowers | 2 | |
| **15-885** | 31666 | 21/32" X 220-7/16" | **Premium Belt** – Drive<br>Fits RM306-2 rear-mount finish mowers | 2 | |
| **115-216** | 31700 | 5/8" x 180" | **Belt** – Standard Belt for Deck Drive<br>Fits finish mowers RM59-1, RM59-1, & RM360 | | |
| **15-886** | 31720 | 21/32" X 222-5/8" | **Premium Belt** – Drive<br>Fits F35F15, F35F15-3, F35F170-3, F35JD75-3, F35K72-3, F35K72H-3, F35K82-3, L59F152, L59F152-1, L59F17, & L59F192 under-mount & mid-mount | 1 | |
| **15-887** | 31748 | 1/2" X 130" | **Premium Belt** – Drive<br>Fits 9180, 9204 turf batwing mowers, RM48JD-2, & RM48YM-2 rear-mount finish mowers | 2 | |
| **15-888** | 32650 | 21/32" X 209-1/4" | **Premium Belt** – Drive<br>Fits F35JD65, F35JD65-3, F35Y187-1, F35Y187-2, & F35Y187-3 under-mount & mid-mount | 1 | |
| **15-889** | 32855 | 21/32" X 225-3/8" | **Premium Belt** – Drive<br>Fits F35H244, F35H244-1, F35H244-2, F35H244-3, F35H254-1, F35H254-2, & F35H254-3 under-mount & mid-mount | 1 | |
| **15-890** | 32906 | 21/32" X 202-15/16" | **Premium Belt** – Drive<br>Fits F35H234-1, F35H234-2, F35H235-3, F35H235/M180-3, F35M180-1, F35M180-2, & F35M180-3 under-mount & mid-mount | 2 | |
| **15-891** | 32970 | 21/32" X 229-1/2" | **Premium Belt** – Drive<br>Fits F35H244-3, F35H254-3, F35K72-3, F35K72H-3, F35K82-3, L306K23, & L306K50 under-mount & mid-mount | 1 | |
| **15-892** | 33050 | 21/32" X 264-3/16" | **Premium Belt** – Drive<br>Fits L503AC/B, L503AC/C, & L503F8N under-mount & mid-mount | 2 | |

# Belts

## Woods

| OREGON | Replaces | Size | Description | Type | Product Code |
|---|---|---|---|---|---|
| **15-893** | 33056 | 21/32" X 258-1/4" | **Premium Belt** – Drive<br>Fits L503A & L503A-1 under-mount & mid-mount | 2 | |
| **15-894** | 33105 | 11/16" x 114-13/16" | **Premium Belt** – Drive | 2 | |
| **115-213** | 33652 | 5/8" x 150" | **Belt** – Standard Belt for Deck Drive<br>Fits finish mower RM59-3 | | |
| **15-895** | 33710 | 21/32" X 178-1/16" | **Premium Belt** – Drive<br>Fits RM306-3 rear-mount finish mower | 2 | |
| **15-896** | 34517 | 21/32" X 135-9/16" | **Premium Belt** – Drive<br>Fits C360F152, C360H235, & C360H255 under-mount & mid-mount | 4 | |
| **15-897** | 3492 | 1/2" X 138-3/8" | **Premium Belt** – Drive<br>Fits 348H234-2, 348KB-2, 348KBE-2, 348M180-1, 348M180-2, 348MF-2, 348MF2-1, 348MF4-1, 348YM55-1, 348YM55-2, 59CF-2, 59CL-1, 59CL-2, 59CL-3, 59CL-4, 59CLF-2, 59CLF-3, 59CLF-4, L306K260-1, L306K28, L59 B192, L59K23, L59K260-1, L59K28, L59KD-1, L59M25-1, L59M25-1, L59M25-2, L59S, & L59Y24 under-mount & mid-mount | 2 | |
| **15-898** | 35162 | 1/2" X 134-3/8" | **Premium Belt** – Gearbox to Spindle Drive<br>Fits CM61 commercial walk-behinds | 7 | |
| **15-899** | 35252 | 21/32" X 133" | **Premium Belt** – Spindle Drive<br>Fits CM61 commercial walk-behinds | 4 | |
| **15-900** | 35433 | 9/16" X 44-3/4" | **Premium Belt** – Engine to Deck Gearbox Drive<br>Fits CM48 & CM61 Commercial Walk Behinds | 2 | |
| **15-901** | 3546 | 1/2" X 139-7/8" | **Premium Belt** – Drive<br>Fits 42CF-1, 42CF-6, 42CL-1, 42CL-2, 42CL-3, 42CL-4, 42CL-5, 42CL-6, & L44KL-1 under-mount & mid-mount | 2 | |
| **15-902** | 35543 | 1/2" X 72-11/16" | **Premium Belt** – Deck Drive<br>Fits CM36 commercial walk-behind | 1 | |
| **15-947** | 35583 | 1/2" X 50" | **Premium Belt** – PTO to Deck Drive<br>Fits CM36 commercial walk-behind | 2 | |
| **15-903** | 36365 | 21/32" X 119" | **Premium Belt** – Spindle Drive<br>Fits CM52DH commercial walk-behind | 2 | |
| **15-904** | 36371 | 1-3/16" X 51-7/16" | **Premium Belt** – Wheel Drive<br>Fits CM36BD & CM48BD mowers | 5 | |
| **15-905** | 36496 | 1/2" X 62" | **Premium Belt** – Hydro Drive<br>Fits CM52DH commercial walk-behind | 1 | |
| **15-906** | 3652 | 21/32" X 226-3/4" | **Premium Belt** – Drive<br>Fits 59A-1, 59A-2, 59HB-1, 59HC-1, L306 F10-2, L306-BMC, L306AC/B-1, L306AC/C, L306CA, L306F10-1, L306F8N-1, L306JD85, L306JD85-2, L306JD95, L306K22, L306K24, L306K260-1, L306MF, L306SBL-1, L59A-3, L59AC/B-1, L59AC/C-1, L59BMC, L59CA, L59F10-1, L59F10-2, L59F26, L59F8N, L59F8N-1, L59GM2, L59JD85, L59JD95, L59K260-1, L59MF, & L59SBL-1 under-mount & mid-mount | 2 | |

B

## Woods

| OREGON | Replaces | Size | Description | Type | Product Code |
|---|---|---|---|---|---|
| **15-907** | 37051 | 5/8" X 99-3/16" | **Premium Belt** | 7 | |
| **115-215** | 4152 | 5/8" x 213-7/16" | **Belt** – Standard Belt for Drive<br>Fits mid-mount mowers L59, L59A, 59TB, 59PH, 59CLF-2, 59C-1, L59A-3, & 59AC | | |
| **15-943** | 4927 | 1/2" X 137-11/16" | **Premium Belt** – Drive<br>Fits CO80, DO80, MBO80, MCO80, & MDO80 multi-spindle (set of 4) | 2 | |
| **15-908** | 5082 | 1/2" X 49-1/16" | **Premium Belt** – Spindle Drive<br>Fits FM48-2 front-mount finish mower | 7 | |
| **15-911** | 51344 | 2-3/16" X 88-7/8" | **Premium Belt** – Drive<br>Fits 9128 & 9142 chipper/shredder | 9 | |
| **15-913** | 53418 | 21/32" X 158-5/16" | **Premium Belt** – Spindle Drive<br>Fits FM20.60, FM20.72, FM20.84, FM2060, FM2072, FM2084 front-mount finish mower, PRD6000, PRD7200, PRD8400, RD6000, RD7200, & RD8400 rear-mount finish mower | 2 | |
| **15-914** | 5711 | 21/32" X 241-15/16" | **Premium Belt** – Drive<br>Fits L306A-3, L306JM/H, L306JM/H-1, L306K210, L306K27, L306Y27, L59JM/H, L59K210, L59KL-1, L59KL-2, L59KL-3, L59VAC, LU306H5, LU306KL-1, & LU306VC under-mount & mid-mount | 2 | |
| **15-916** | 66503 | 21/32" X 135-15/16" | **Premium Belt** – Drive<br>Fits C360 under-mount, C360H20 & C360H3040 under-mount & mid-mount | 4 | |
| **15-918** | 6814 | 7/8" X 162-1/16" | **Premium Belt** – Drive<br>Fits 62-1 & 62-2 under-mount & mid-mount | 2 | |
| **15-920** | 70003 | 21/32" X 88-7/8" | **Premium Belt** – Spindle Drive<br>Fits 1250, 1850, 1855, 1860, 2850, 2855, 5180, 5182, 5200, 5210, 5215, & 5250 Mow`n Machine with 44" decks | 7 | |
| **15-921** | 70102 | 21/32" X 65-3/16" | **Premium Belt** – Spindle Drive<br>Fits 1850, 1855, 1860, 2150, 2850, 2855, 5180, 5182, 5200, 5210, 5215, 5250, D5218-2, D5218-3, D5218T, D5221T, D6118T, D6121T, DM5219, & DO4814 Mow`n Machine with 52" decks | 7 | |
| **15-922** | 70132 | 9/16" X 82-1/8" | **Premium Belt** – Spindle Drive<br>Fits 1850, 1855, 1860, 2150, 2850, 2855, 5180, 5182, 5200, 5210, 5215, 5250, D5218-2, D5218-3, D5218T, D5221T, D6118T, D6121T, DM4415, & DM6119 Mow`n Machine with 61" decks | 7 | |
| **15-939** | 70197 | 21/32" X 28-15/16" | **Premium Belt** – PTO Drive<br>Fits 1250 Mow`n Machine | 7 | |
| **15-940** | 70341 | 1/2" X 36" | **Premium Belt** – PTO Drive<br>Fits 1850, 1855, 1860, 2150, 2850, 2855, 2860, 3150, 5120, 5140, 5160, 5180, 5182, 5200, 5210, 5215, 5250, 6140, 6160, 6170, 6180, 6182, 6200, 6210, 6215, 6225, & 6250 Mow`n Machine | 7 | |

# Belts

| OREGON | Replaces | Size | Description | Type | Product Code |
|---|---|---|---|---|---|
| **Woods** | | | | | |
| **15-923** | 70580 | 1/2" X 103" | **Premium Belt** – Blower Drive<br>Fits 1250, 1850, 1855, 1860, 2850, 2855, 5120, 5140, 5180, 5182, 5200, 5210, 5212, 5215, & 5250 Mow`n Machine with 44" decks | 7 | |
| **15-924** | 70581 | 21/32" X 41" | **Premium Belt** – Blower Drive<br>Fits 1250, 1850, 1855, 1860, 2850, 2855, 2860, 3150, 5120, 5140, 5180, 5182, 5200, 5210, 5212, 5215, 5250, D4414, D4818, D5218, D6118, DO4418T, & DO4818 Mow`n Machine with 48" & 52" decks | 7 | |
| **15-926** | 70983 | 21/32" X 94-9/16" | **Premium Belt** – Spindle Drive<br>Fits 1860, 2150, 5180, 5182, 5200, 5210, 5215, D7221, DM7219, & DM7221 Mow`n Machine with 72" decks | 7 | |
| **15-928** | 71429 | 21/32" X 62-1/4" | **Premium Belt** – Spindle Drive<br>Fits 5180, 5182, 5200, 5210, 5212, 5215, 5250, & D4818 Mow`n Machine with 48" decks | 7 | |
| **15-929** | 71506 | 21/32" X 46-1/16" | **Premium Belt** – Blower Drive<br>Fits 1250, 1850, 1855, 1860, 2850, 2855, 2860, 3150, 5120, 5140, 5180, 5182, 5200, 5210, 5212, 5215, 5250, D4414, D4818, D5218-2, D5218-3, D5218T, D5221T, D6118T, DO4418T, & DO4818 Mow`n Machine with 61" decks | 7 | |
| **15-930** | 71526 | 21/32" X 93-3/8" | **Premium Belt** – Spindle Drive<br>Fits 5120, 5140, & DO4814 Mow`n Machine with 48" decks | 7 | |
| **15-931** | 71579 | 1/2" X 37-1/4" | **Premium Belt** – Hydro Drive<br>Fits 5120, 5140, 5160, 6140, & 6160 Mow`n Machine | 7 | |
| **15-932** | 71616 | 21/32" X 93-3/8" | **Premium Belt** – Spindle Drive<br>Fits 5120, 5140, 5180, 5200, 5210, 5215, 5250, D4414, DM4415, & DM5219 Mow`n Machine with 44" decks | 7 | |
| **15-933** | 71838 | 21/32" X 52-1/8" | **Premium Belt** – Spindle Drive<br>Fits D5218, D5221, D6118, D6121, DM5219, & DO4814 Mow`n Machine with 52" decks | 7 | |
| **15-934** | 71879 | 9/16" X 54-7/16" | **Premium Belt** – Spindle Drive<br>Fits D5218, D5221, D6118, D6121, DM4415, & DM6119 Mow`n Machine with 61" decks | 7 | |
| **15-935** | 72818 | 9/16" X 64-5/8" | **Premium Belt** – Spindle Drive<br>Fits 6170 & DO4818 Mow`n Machine with 48" decks | 7 | |
| **15-936** | 73263 | 1/2" X 38" | **Premium Belt** – Hydro Drive<br>Fits 6140, 6160, & 6170 Mow`n Machine | 7 | |
| **Wright Stander** | | | | | |
| **75-952** | 71460002 | 5/8" x 55-1/8" | **Premium Belt** – Deck<br>For 52" deck | 6 | |
| **75-949** | 71460003 | 5/8" x 80-1/4" | **Premium Belt** – Deck<br>For 42" & deck drive belt fo 52", number BX71 | 6 | |

B

| OREGON | Replaces | Size | Description | Type | Product Code |
|---|---|---|---|---|---|
| **Wright Stander** | | | | | |
| **75-951** | 71460010 | 5/8" x 53-7/16" | **Premium Belt** – Deck<br>For 48" deck, number BX50 | 6 | |
| **75-948** | 71460011 | 5/8" x 74" | **Premium Belt** – Deck<br>For 36" & deck drive belt for 48", number BX71 | 6 | |
| **115-218** | 71460033 | 1/2" x 53" | **Belt** – Standard Belt for Mule Drive<br>Fits Standers large & small frame | | |
| **15-056** | 71460064 | 5/8" x 64-5/16" | **Premium Belt** – Pump Drive<br>For Stander X (SN 53014 & up) & Sentar (SN 26980 & up) | 1 | |
| **15-057** | 71460071 | 5/8" x 96-5/16" | **Premium Belt** – Engine to Blade<br>For Standers with 52" deck (SN 49046 & up), Stander X with 52" deck (SN 53014 & up), & Velke GD mowers with 32" decks (SN 32274 & up) | 1 | |
| **15-055** | 71460123 | 5/8" x 78-5/16" | **Premium Belt** – Engine to Blade<br>For Standers with 48" deck (SN 49046 & up) & Stander X with 48" deck<br>(SN 55853 & up) | 1 | |

## Belt Measurer

**75-910**

- Measures belts from 14–100" in length
- Heavy-duty aluminum

## Belt Rack

**75-902**

- 36" wood rack with (6) 5-1/2" hooks
- Adjustable rack has 16 placements for hooks

Can't find what you're looking for?
Try us online to search the latest products available.

OregonProducts.com

# Belts

## Tech Tip — Measure an Aramid Cord Belt

**Aramid Fiber Cord** is the family name of nylons that include Kevlar®. Oregon® Aramid Fiber Cord belts are the best quality, longest-lasting belts available in the market place.

Oregon Aramid cord belts are measured by the outside circumference and can easily replace an A or B belt. Simply add 2 inches to the length for "A" belts and 3 inches to the length for "B" belts.

**Examples**
75-340 = 3/8" x 40" belt
75-468 = 1/2" x 68" belt
75-598 = 5/8" x 98" belt

**Examples**
A48 = 75-450
B40 = 75-543

**Measuring Top Width of Aramid Belts**

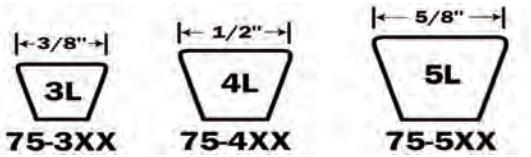


**Aramid Belt Part Numbers**
Part numbers for the Premium Aramid Fiber Cord belts are coded to save look-up time, are five digits and are determined as followed:

A B C
**75-340**

A. First two digits are always 75-
B. Third digit is the width of the belt
   3 = 3/8"
   4 = 1/2"
   5 = 5/8"
C. Forth and fifth digit show the length

## Tech Tip — Measuring a Belt

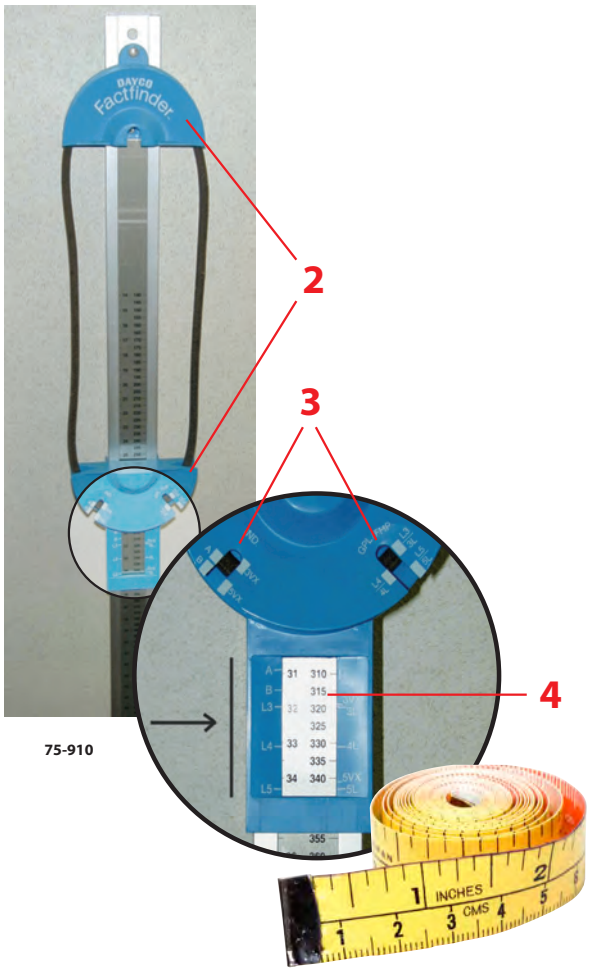


75-910

**Oregon Belt Measurer 75-910**

1. Define type of belt :
   - 3L = 3/8" or 9.5 mm
   - 4L = 1/2" or 12.7 mm
   - 5L = 5/8" or 15.9 mm
2. Fit the belt over the blue plastic split pulley and pull the bottom half down tight.
3. If you are measuring an industrial belt (bulgy top), look at the left-hand slot in the half pulley.

   The size (section) of the belt is indicated by the intersection of the belt top with one of the white blocks, either A or B.

   If you have an FHP belt (flat top), the same procedure applies to the right-hand slot. The belt in the photo is a 4L belt (the section).
4. Now that you know the belt's profile (section), look at the window below the split pulley and find the section number for your belt (3L, 4L, 5L, A or B) printed in white on the left side of the window. The number opposite or closest is the length in inches of the belt you are measuring.

**Cloth Tape Measure**

1. Place the beginning of the cloth measuring tape anywhere on the outside of the belt
2. Wrap the tape around the complete circumference of the belt until it wraps back around to its beginning
3. Where the two meet, read the length given

# Belts – Premium Aramid Cord

| Length | 3/8" Aramid | 1/2" Aramid | 5/8" Aramid |
|---|---|---|---|
| 17" | — | — | — |
| 18" | — | 75-418 | — |
| 19" | — | 75-419 | — |
| 20" | 75-320 | 75-420 | — |
| 21" | 75-321 | 75-421 | — |
| 22" | 75-322 | 75-422 | — |
| 23" | 75-323 | 75-423 | — |
| 24" | 75-324 | 75-424 | — |
| 25" | 75-325 | 75-425 | 75-525 |
| 26" | 75-326 | 75-426 | — |
| 27" | 75-327 | 75-427 | 75-527 |
| 28" | 75-328 | 75-428 | 75-528 |
| 29" | 75-329 | 75-429 | 75-529 |
| 30" | 75-330 | 75-430 | 75-530 |
| 31" | 75-331 | 75-431 | 75-531 |
| 32" | 75-332 | 75-432 | 75-532 |
| 33" | 75-333 | 75-433 | 75-533 |
| 34" | 75-334 | 75-434 | 75-534 |
| 35" | 75-335 | 75-435 | 75-535 |
| 36" | 75-336 | 75-436 | 75-536 |
| 37" | 75-337 | 75-437 | 75-537 |
| 38" | 75-338 | 75-438 | 75-538 |
| 39" | 75-339 | 75-439 | 75-539 |
| 40" | 75-340 | 75-440 | 75-540 |
| 41" | 75-341 | 75-441 | 75-541 |
| 42" | 75-342 | 75-442 | 75-542 |

| Length | 3/8" Aramid | 1/2" Aramid | 5/8" Aramid |
|---|---|---|---|
| 43" | 75-343 | 75-443 | 75-543 |
| 44" | 75-344 | 75-444 | 75-544 |
| 45" | 75-345 | 75-445 | 75-545 |
| 46" | 75-346 | 75-446 | 75-546 |
| 47" | — | 75-447 | 75-547 |
| 48" | 75-348 | 75-448 | 75-548 |
| 49" | 75-349 | 75-449 | 75-549 |
| 50" | 75-350 | 75-450 | 75-550 |
| 51" | — | 75-451 | 75-551 |
| 52" | — | 75-452 | 75-552 |
| 53" | — | 75-453 | 75-553 |
| 54" | — | 75-454 | 75-554 |
| 55" | — | 75-455 | 75-555 |
| 56" | — | 75-456 | 75-556 |
| 57" | — | 75-457 | 75-557 |
| 58" | — | 75-458 | 75-558 |
| 59" | — | 75-459 | 75-559 |
| 60" | — | 75-460 | 75-560 |
| 61" | — | 75-461 | 75-561 |
| 62" | — | 75-462 | 75-562 |
| 63" | — | 75-463 | 75-563 |
| 64" | — | 75-464 | 75-564 |
| 65" | — | 75-465 | 75-565 |
| 66" | — | 75-466 | 75-566 |
| 67" | — | 75-467 | 75-567 |
| 68" | — | 75-468 | 75-568 |

| Length | 3/8" Aramid | 1/2" Aramid | 5/8" Aramid |
|---|---|---|---|
| 69" | — | 75-469 | 75-569 |
| 70" | — | 75-470 | 75-570 |
| 71" | — | 75-471 | 75-571 |
| 72" | — | 75-472 | 75-572 |
| 73" | — | 75-473 | 75-573 |
| 74" | — | 75-474 | 75-574 |
| 75" | — | 75-475 | 75-575 |
| 76" | — | 75-476 | 75-576 |
| 77" | — | 75-477 | 75-577 |
| 78" | — | 75-478 | 75-578 |
| 79" | — | 75-479 | 75-579 |
| 80" | — | 75-480 | 75-580 |
| 81" | — | 75-481 | 75-581 |
| 82" | — | 75-482 | 75-582 |
| 83" | — | 75-483 | 75-583 |
| 84" | — | 75-484 | 75-584 |
| 85" | | 75-485 | 75-585 |
| 86" | — | 75-486 | 75-586 |
| 87" | — | 75-487 | 75-587 |
| 88" | — | 75-488 | 75-588 |
| 89" | — | 75-489 | 75-589 |
| 90" | — | 75-490 | 75-590 |
| 91" | — | 75-491 | 75-591 |
| 92" | — | 75-492 | 75-592 |
| 93" | — | 75-493 | 75-593 |
| 94" | — | 75-494 | 75-594 |

| Length | 3/8" Aramid | 1/2" Aramid | 5/8" Aramid |
|---|---|---|---|
| 95" | — | 75-495 | 75-595 |
| 96" | — | 75-496 | 75-596 |
| 97" | — | 75-497 | 75-597 |
| 98" | — | 75-498 | 75-598 |
| 99" | — | 75-499 | 75-599 |
| 100" | — | 75-400 | 75-500 |
| 101" | — | 75-401 | — |
| 102" | — | 75-402 | — |
| 103" | — | 75-403 | 75-503 |
| 104" | — | 75-404 | — |
| 105" | — | 75-405 | — |
| 106" | — | 75-406 | — |
| 107" | — | 75-407 | — |
| 108" | — | 75-408 | — |
| 109" | — | 75-409 | — |
| 110" | — | 75-410 | — |
| 111" | — | 75-411 | — |
| 112" | — | 75-412 | — |
| 113" | — | 75-413 | — |
| 114" | — | 75-414 | — |
| 117" | — | 75-417 | — |

# Belts – Industrial Polyester Cord

| Length | "A" Section 1/2" | "B" Section 5/8" |
|---|---|---|
| 16" | 75-A14 | – |
| 17" | 75-A15 | – |
| 18" | 75-A16 | – |
| 19" | 75-A17 | – |
| 20" | 75-A18 | – |
| 21" | 75-A19 | – |
| 22" | 75-A20 | 75-B19 |
| 23" | 75-A21 | 75-B20 |
| 24" | 75-A22 | 75-B21 |
| 25" | 75-A23 | 75-B22 |
| 26" | 75-A24 | 75-B23 |
| 27" | 75-A25 | 75-B24 |
| 28" | 75-A26 | 75-B25 |
| 29" | 75-A27 | 75-B26 |
| 30" | 75-A28 | 75-B27 |
| 31" | 75-A29 | 75-B28 |
| 32" | 75-A30 | 75-B29 |
| 33" | 75-A31 | 75-B30 |
| 34" | 75-A32 | 75-B31 |
| 35" | 75-A33 | 75-B32 |
| 36" | 75-A34 | 75-B33 |
| 37" | 75-A35 | 75-B34 |
| 38" | 75-A36 | 75-B35 |
| 39" | 75-A37 | 75-B36 |
| 40" | 75-A38 | 75-B37 |
| 41" | 75-A39 | 75-B38 |
| 42" | 75-A40 | 75-B39 |
| 43" | 75-A41 | 75-B40 |
| 44" | 75-A42 | 75-B41 |
| 45" | 75-A43 | 75-B42 |
| 46" | 75-A44 | 75-B43 |
| 47" | 75-A45 | 75-B44 |
| 48" | 75-A46 | 75-B45 |
| 49" | 75-A47 | 75-B46 |
| 50" | 75-A48 | 75-B47 |
| 51" | 75-A49 | 75-B48 |
| 52" | 75-A50 | 75-B49 |
| 53" | 75-A51 | 75-B50 |
| 54" | 75-A52 | 75-B51 |
| 55" | 75-A53 | 75-B52 |
| 56" | 75-A54 | 75-B53 |
| 57" | 75-A55 | 75-B54 |
| 58" | 75-A56 | 75-B55 |
| 59" | 75-A57 | 75-B56 |
| 60" | 75-A58 | 75-B57 |
| 61" | 75-A59 | 75-B58 |
| 62" | 75-A60 | 75-B59 |
| 63" | 75-A61 | 75-B60 |
| 64" | 75-A62 | 75-B61 |
| 65" | 75-A63 | 75-B62 |
| 66" | 75-A64 | 75-B63 |
| 67" | 75-A65 | 75-B64 |
| 68" | 75-A66 | 75-B65 |
| 69" | 75-A67 | 75-B66 |
| 70" | 75-A68 | 75-B67 |
| 71" | 75-A69 | 75-B68 |
| 72" | 75-A70 | 75-B69 |
| 73" | 75-A71 | 75-B70 |
| 74" | 75-A72 | 75-B71 |
| 75" | 75-A73 | 75-B72 |
| 76" | 75-A74 | 75-B73 |
| 77" | 75-A75 | 75-B74 |
| 78" | 75-A76 | 75-B75 |
| 79" | 75-A77 | 75-B76 |
| 80" | 75-A78 | 75-B77 |
| 81" | 75-A79 | 75-B78 |
| 82" | 75-A80 | 75-B79 |
| 83" | 75-A81 | 75-B80 |
| 84" | 75-A82 | 75-B81 |
| 85" | 75-A83 | 75-B82 |
| 86" | 75-A84 | 75-B83 |
| 87" | 75-A85 | 75-B84 |
| 88" | 75-A86 | 75-B85 |
| 89" | 75-A87 | 75-B86 |
| 90" | 75-A88 | 75-B87 |
| 91" | 75-A89 | 75-B88 |
| 92" | 75-A90 | 75-B89 |
| 93" | 75-A91 | 75-B90 |

| Length | "A" Section 1/2" | "B" Section 5/8" |
|---|---|---|
| **94"** | 75-A92 | 75-B91 |
| **95"** | 75-A93 | 75-B92 |
| **96"** | 75-A94 | 75-B93 |
| **97"** | 75-A95 | 75-B94 |
| **98"** | 75-A96 | 75-B95 |
| **99"** | 75-A97 | 75-B96 |
| **100"** | 75-A98 | 75-B97 |
| **101"** | 75-A99 | 75-B98 |
| **102"** | 75-A100 | 75-B99 |
| **103"** | 75-A101 | 75-B100 |
| **104"** | 75-A102 | 75-B101 |
| **105"** | 75-A103 | 75-B102 |
| **106"** | 75-A104 | 75-B103 |
| **107"** | 75-A105 | 75-B104 |
| **108"** | 75-A106 | 75-B105 |
| **109"** | 75-A107 | 75-B106 |
| **110"** | 75-A108 | 75-B107 |
| **111"** | 75-A109 | 75-B108 |
| **112"** | 75-A110 | 75-B109 |
| **113"** | 75-A111 | 75-B110 |
| **114"** | 75-A112 | 75-B111 |
| **115"** | 75-A113 | 75-B112 |
| **116"** | 75-A114 | 75-B113 |
| **117"** | 75-A115 | 75-B114 |
| **118"** | 75-A116 | 75-B115 |
| **119"** | 75-A117 | 75-B116 |

| Length | "A" Section 1/2" | "B" Section 5/8" |
|---|---|---|
| **120"** | 75-A118 | 75-B117 |
| **121"** | 75-A119 | 75-B118 |
| **122"** | 75-A120 | 75-B119 |
| **123"** | 75-A121 | 75-B120 |
| **124"** | 75-A122 | 75-B121 |
| **125"** | 75-A123 | 75-B122 |
| **126"** | 75-A124 | 75-B123 |
| **127"** | 75-A125 | 75-B124 |
| **128"** | 75-A126 | 75-B125 |
| **129"** | 75-A127 | 75-B126 |
| **130"** | 75-A128 | 75-B127 |
| **131"** | 75-A129 | 75-B128 |
| **132"** | 75-A130 | 75-B129 |
| **133"** | 75-A131 | 75-B130 |
| **134"** | 75-A132 | 75-B131 |
| **135"** | 75-A133 | 75-B132 |
| **136"** | 75-A134 | 75-B133 |
| **137"** | 75-A135 | 75-B134 |
| **138"** | 75-A136 | 75-B135 |
| **139"** | 75-A137 | 75-B136 |
| **140"** | 75-A138 | 75-B137 |
| **141"** | 75-A139 | 75-B138 |
| **142"** | 75-A140 | 75-B139 |
| **143"** | 75-A141 | 75-B140 |
| **144"** | 75-A142 | 75-B141 |
| **145"** | 75-A143 | 75-B142 |

| Length | "A" Section 1/2" | "B" Section 5/8" |
|---|---|---|
| **146"** | 75-A144 | 75-B143 |
| **147"** | 75-A145 | 75-B144 |
| **148"** | 75-A146 | 75-B145 |
| **149"** | 75-A147 | 75-B146 |
| **150"** | 75-A148 | 75-B147 |
| **151"** | 75-A149 | 75-B148 |
| **152"** | 75-A150 | 75-B149 |
| **153"** | – | 75-B150 |

# Belts – Troubleshooting

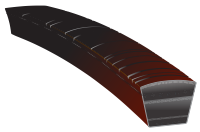
Cracking **A**

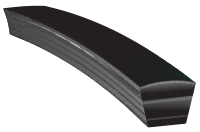
Wear on Sidewalls **B**

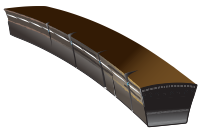
Edge Cord Failure **C**

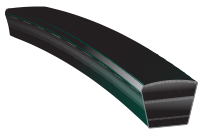
Wear on Top Corner **D**

Surface Flaking Sticky or Swollen **E**

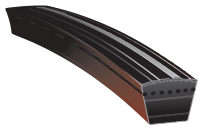
Wear on Top Surface **F**

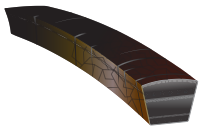
Surface Hard or Stiff **G**

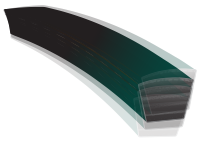
Vibration **H**

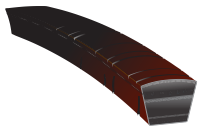
High Belt Temperature **I**

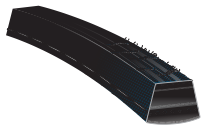
Wear on Bottom Surface **J**

| | Probable Cause | Corrective Action |
|---|---|---|
| **A** | **Cracking** | |
| | Sheaves too small for belt section | Use larger diameter sheaves |
| | Belt slip | Retension to manufacturer's recommendations |
| | Backside idler diameter too small | Increase backside idler to acceptable diameter |
| | Improper belt storage | Don't coil belt too tightly, kink, or bend. Avoid heat & direct sunlight |
| | Excessive hot or cold temperature | Control drive environment |
| **B** | **Wear on Sidewalls** | |
| | Belt slip | Retension to manufacturer's recommendations |
| | Sheave misalignment | Realign drive |
| | Worn sheaves | Replace sheaves |
| | Incorrect belt | Replace with correct belt size |
| **C** | **Edge Core Failure** | |
| | Sheave misalignment | Check alignment & correct |
| | Damaged tensile member | Follow correct installation procedure |
| | Worn or incorrect sheaves | Replace sheaves for correct belt/sheave match |
| **D** | **Wear on Top Corner** | |
| | Belt-to-sheave fit incorrect | Use correct belt/sheave match |
| | Belt rubbing against guard or drive structure | Remove obstruction |
| **E** | **Surface Flaking Sticky or Swollen** | |
| | Oil or chemical contamination | Do not use belt dressing; eliminate sources of oil, grease, or chemical contamination |
| **F** | **Wear on Top Surface** | |
| | Belt rubbing against guard | Repair or replace guard |
| | Damaged idler | Repair or replace idler |
| **G** | **Surface Hard or Stiff** | |
| | Hot drive environment | Improve ventilation to drive |
| | Belt slip | Retension to manufacturer's recommendations |
| **H** | **Unusual Vibration** | |
| | Incorrect belt | Use correct belt/sheave match |
| | Poor equipment structural design | Check structure for adequate strength & rigidity |
| | Excessive sheave eccentricity | Replace defective sheave |
| | Loose drive components | Check machine components, guards, motor mounts, motor pads, bushings, brackets & framework for adequate strength, stability & installation |
| **I** | **High Belt Temperature** | |
| | Hot drive environment | Improve ventilation to drive |
| | Slipping | Retension until slipping stops |
| **J** | **Wear on Bottom Surface** | |
| | Belt bottoming against sheave groove bottom | Use correct belt/sheave match |
| | Worn sheaves | Replace sheaves |
| | Debris in sheaves | Clean sheaves |

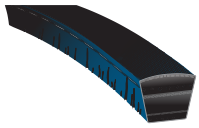

Undercord Cracking **K**

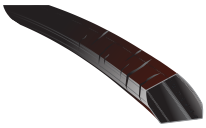

Turns Over or Comes of Drive **L**

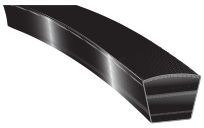

Undercord Sidewall Burn or Hardening **M**

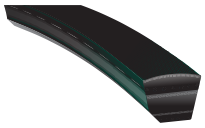

Wear on Bottom Corner **N**

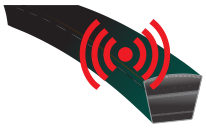

Unusual Noise **O**

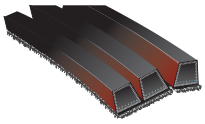

Top of Tie Band Damaged **P**

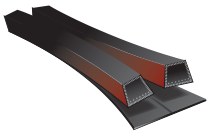

Tie Band Separation **Q**

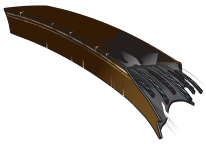

Broken Belt **R**

| | Probable Cause | Corrective Action |
|---|---|---|
| **K** | **Undercord Cracking** | |
| | Sheaves too small for belt section | Use larger diameter sheaves |
| | Belt slip | Retension to manufacturer's recommendations |
| | Backside idler diameter too small | Increase backside idler to acceptable diameter |
| | Excessive hot or cold temperature | Control drive environment |
| | Improper belt storage | Don't coil belt too tightly, kink, or bend. Avoid heat & direct sunlight |
| **L** | **Turns Over or Comes Off Drive** | |
| | Shock loading or vibration | Check drive design |
| | Foreign material in grooves | Shield grooves & drive |
| | Sheave misalignment | Realign drive |
| | Worn sheave grooves | Replace sheaves |
| | Subminimal diameter sheave | Replace sheave with correct diameter |
| **M** | **Sidewall Burn or Hardening** | |
| | Belt slip | Retension to manufacturer's recommendations |
| | Worn sheaves | Replace sheaves |
| | Under-designed drive | Redesign to manufacturer's recommendations |
| | Shaft movement | Check for center distance changes |
| **N** | **Wear on Bottom Corner** | |
| | Belt-to-sheave fit incorrect | Use correct belt/sheave match |
| | Worn sheaves | Replace sheaves |
| **O** | **Unusual Noise** | |
| | Incorrect belt for sheaves | Use correct belt size & type |
| | Incorrect tension | Check belt tension & adjust |
| | Worn sheaves | Replace sheaves |
| | Debris in sheaves | Clean sheaves; improve shielding; remove rust, paint; or remove dirt from grooves |
| | Sheave misalignment | Realign drive |
| **P** | **Top of Tie Band Damage** | |
| | Interference with guard | Check & adjust guard |
| | Backside idler malfunction | Replace or repair backside idler |
| | Debris in sheaves | Clean sheaves |
| **Q** | **Tie Band Separation** | |
| | Improper groove spacing | Use sheaves manufactured to industry specifications |
| | Worn or incorrect sheaves | Replace sheaves |
| | Sheave misalignment | Realign drive |
| **R** | **Broken Belt** | |
| | Under-designed drive | Redesign to manufacturers recommendations |
| | Belt rolled or pried onto sheave | Use drive center distance adjustment when installing |
| | Object falling into drive | Provide adequate guard or drive protection |
| | Severe shock load | Redesign to accommodate shock load |

# Blade Adaptors

| OREGON | Replaces | Description | Product Code |
|---|---|---|---|

## AYP

**65-002*** 193707, 184590, 532193707 (Husqvarna), 532184590 (Husqvarna)

**Blade Adapter**
For walk-behind mowers built after 2005
Diameter: 1"

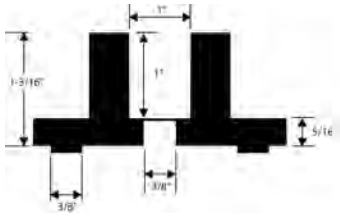


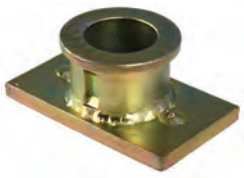

**65-006*** 850977

**Blade Adapter**
For all newer style walk-behind mowers
Depth: 1", diameter: 7/8"
POWDERED METAL

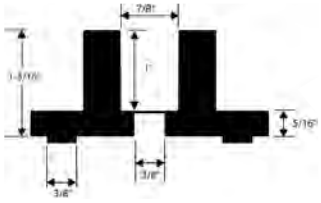


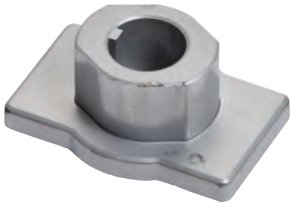

**65-007*** 851514

**Blade Adapter**
For all new-style mulching mowers
Depth: 7/8", diameter: 7/8"
POWDERED METAL

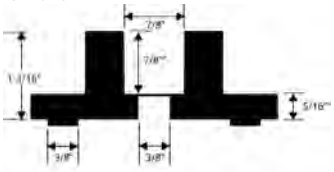


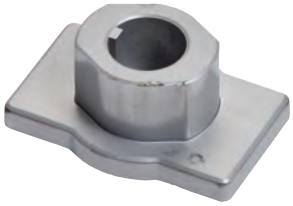

**65-008** AYP 420097, 532420097 (Husqvarna)

**Blade Adaptor**
Fits 21" models PR160N (2009–2010), PR625N, & XT625N, Husqvarna model 6021P

## Bobcat

**80-122**** 71002B, 146281 (Lawn Boy)

**Blade Adapter**
DIECAST

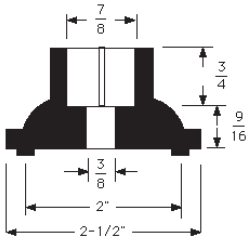

## MTD

**65-220*** 753-0210, 748-0235, 748-0283

**Blade Adapter**
Splined for new style rider
Fits 30" model 796
Side holes: 5/16"
POWDERED METAL

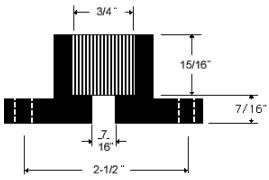


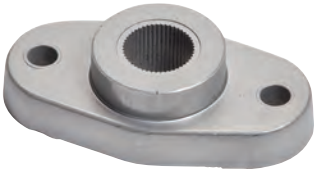



*adaptor only **kit with hardware

| OREGON | Replaces | Description | Product Code |
|---|---|---|---|

## MTD

**65-221***
**80-145****
748-0300 (adapter)

**Blade Adapter**
Splined for riding mower
Fits riders series models (1985–1988) 300, 400, 500, 600, 700, & 800
Side hole: 5/16"
POWDERED METAL

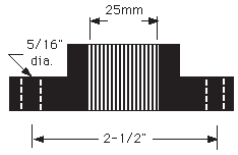

---

**65-222***
753-0348B

**Blade Adapter**
Keyed for push mowers
Side hole: 5/16", keyway: 3/16"
POWDERED METAL

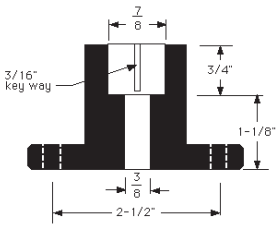

---

**65-224***
**80-146****
748-0323
948-0323 (adapter)
753-0484 (kit)

**Blade Adapter**
Fits push mowers (1986–1996) 010, 020, 030, 040, 050, 060, 070, & 080, self-propelled series 090, 100, 200, 300, 400, 500, 700, & 800
Built-in key: 3/16"
Side holes: 3/8"
POWDERED METAL

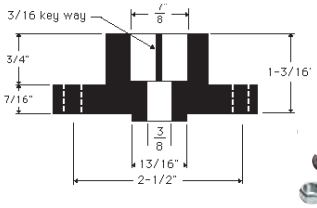

---

**65-226***
748-0324 (adapter)
753-0485 (kit)

**Blade Adapter – Splined**
Fits push mowers (1989–1992) 070, 080, & 090, self-propelled series 100, 200, 400, 500, 700, & 800
Side holes: 3/8"
POWDERED METAL

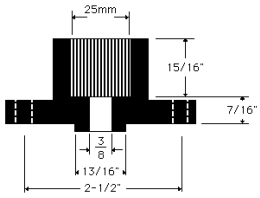


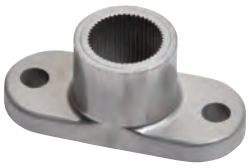

---

**65-228***
748-0365

**Blade Adapter – Splined**
Use with Oregon® 98-537 & 98-538 mulching blades
Bore: 25 mm, side holes: 7/16"
(1994–1996)
POWDERED METAL

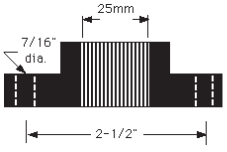

---

**65-009**
736-0524B

**Blade Bell Support**
For many walk-behind mowers (1994–2013)

---

**65-225**
748-0376E
748-0376C
748-0376B
746-0376A

**Blade Adapter**
For many walk-behind mowers (1994–2013)

***adaptor only** ****kit with hardware**

# Blade Adaptors

| OREGON | Replaces | Description | Product Code |
|---|---|---|---|

## Murray

**65-206*** 54211, 20617

**Blade Adapter**
For all riding mowers with double "D" center hole
Keyway: 5/32"
POWDERED METAL

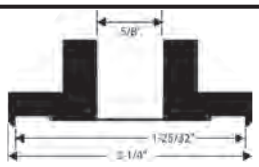

**65-208*** 91926, 92466

**Blade Adapter – Splined**
For blades with round center-hole on riding mower & lawn tractor (1990 to present)
Use with Oregon® 82-243, 82-023, & 82-250 spindles
Diameter: 2-5/32"
Splined shaft: 5/8"
POWDERED METAL

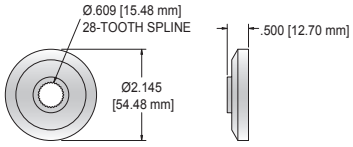

**65-204*** 690411

**Blade Adapter**
For 42", 46", & 52" rail deck frames
Use with Oregon 82-245 spindle
Diameter: 2-5/32"
Splined ID: 5/8"
POWDERED METAL

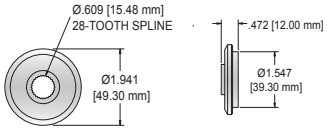

## Sears

**65-006** AYP 850977

**Blade Adapter**
For all newer style walk-behind mowers
Depth: 1"
Diameter: 7/8"
POWDERED METAL

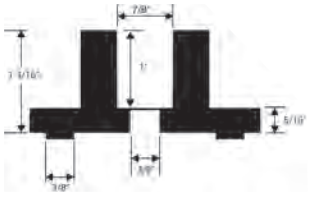


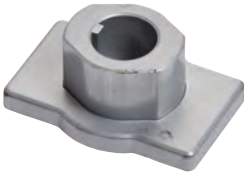

**65-007** AYP 851514

**Blade Adapter**
For all new-style mulching mowers
Depth: 7/8"
Diameter: 7/8"
POWDERED METAL

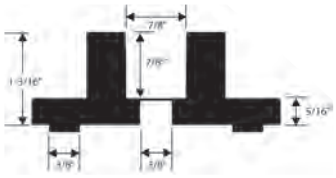


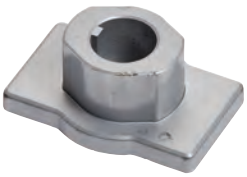

## Snapper

**65-229*** 1-2927, 7012927

**Blade Adapter**
Use with Oregon 99-103, 99-107, & 99-920 blades
For steel deck walk-behind mowers
Keyway: 5/32"
POWDERED METAL

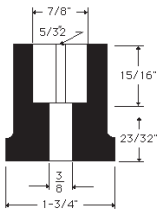


65-229

## Walker

**65-230*** 5706

**Blade Adapter**
Use wth Oregon 91-910, 91-911, 91-912 91-913, & 91-914 blades

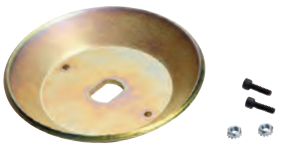



***adaptor only** ****kit with hardware**

X304

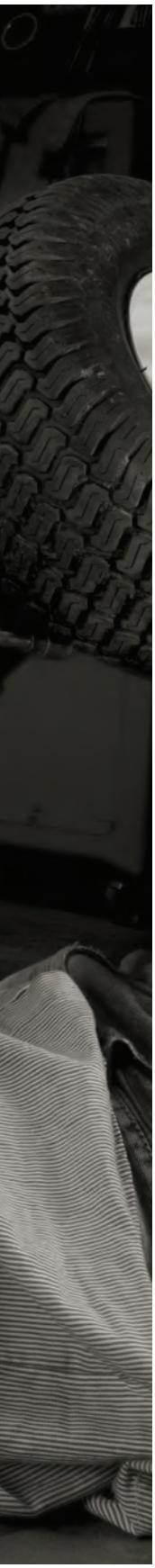

Gator® Mower Blades . . . . . LG 346–347
100-Series and Sand Blades . . . . . LG 348
Common Blade Measurements and Arbor Hole Types . . . . . LG 349
Blades by Length . . . . . LG 350–367
Universal Blades . . . . . LG 368
OEM Exact Replacement Blades . . . . . LG 369–583
Edger Blades . . . . . LG 584–591

B

# Gator® Lawn Mower Blades

The Oregon® Gator series of lawnmower blades deliver a full range of enhancements designed to boost performance and durability. The exclusive Gator Mulcher® feature on every Gator blade provides outstanding bagging and discharge efficiency, saving you time and hassle.

**G3™** Engineered with the core Gator mulching features that make them a great choice for normal and abrasive conditions.

*— G3 blades may include additional features and/or other dimensions than listed below.*

**G5™** An optimum combination for a wide range of mower units. Features a high-lift contour as well as two additional, premium features to improve performance and retain blade sharpness.

**G6®** Heavy-duty blades designed for commercial applications and to withstand punishing conditions, while offering the full-range of features that make Gator series blades unique.

## SPECIFICATIONS

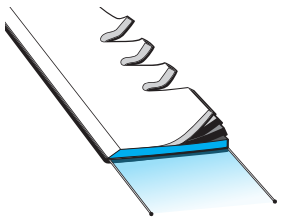

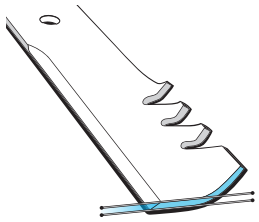

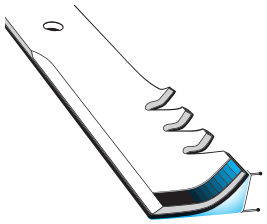

| | Width | Thickness | Air Lift* |
|---|---|---|---|
| **G6** | 3.00"<br>76.2 mm | 0.250"<br>6.35 mm | 1.00"<br>25.4 mm |
| **G5** | 3.00"<br>76.2 mm | ≤ 0.203"<br>≤ 5.156 mm | 1.00"<br>25.4 mm |
| **G3** | ≤ 2.50"<br>≤ 63.5 mm | ≤ 0.203"<br>≤ 5.156 mm | 0.75"<br>19.05 mm |

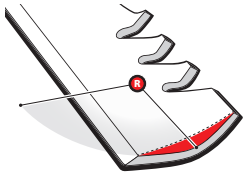

**Radius-cut end**

All Gator blades feature progressive geometry to maintain maximum cutting length throughout the life of the blade.

* tops of Gator teeth extend 1/4" more than the air lift height listed

Oregon® mower blades are created using manufacturing processes that combine the latest technology with a comprehensive range of quality control standards. These processes and standards are designed to provide Oregon blades with the consistency and longevity that professionals demand and homeowners prefer.

**QUALITY CONTROL**

- Oregon blades not only meet specifications, Oregon blades often are the specification
- Oregon consistently delivers quality mower blades through established manufacturing standards for 26 characteristics – look for the Certified Quality label on Oregon blades.

**COMPUTER CONTROLLED STRAIGHTENING**

- Superior straightness and consistency
- Cleaner cut, especially on multi-blade decks
- Reduced vibration

**SELECTION**

- Find a full range of replacement blades for most residential and commercial mowers at oregonproducts.com or in the Oregon catalog.

## FEATURES

| Superior Side Discharge & Bagging | Superior Mulching | Increased Cutting | Preserves Cutting Edge | Superior Longevity |
|---|---|---|---|---|
| 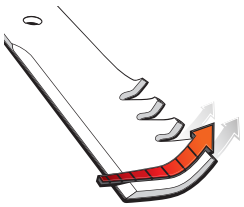 | | 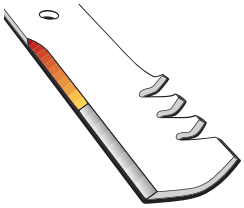 | 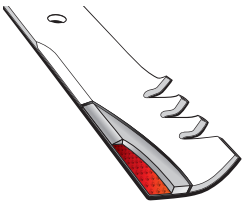 | 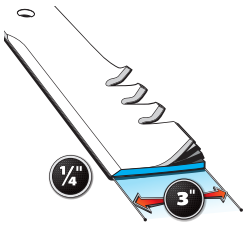 |
| High-lift | Gator Mulcher® | X-Tended Cutting Length™ | Fusion® | Thicker & Wider |
| ★ | ★ | ★ | ★ | ★ |
| ★ | ★ | ★ | ★ | ☆ |
| ★ | ★ | ☆ | ☆ | ☆ |
| The aggressive blade angle increases air flow to push debris up-and-out for superior bagging or side discharge. | Cleaner, more efficient cutting performance can eliminate the need to bag, saving time and hassle. | Up to twice the cutting length optimizes the cutting efficiency with each revolution. | Tungsten carbide is "fused" into the blade – creating an ultra-hard layer at the cutting edge and increasing the time between sharpening. | Greater width and thickness extends blade life and allows for longer lifting arch to improve bagging and mulching. |

B

# Lawn Mower Blades

## 100-Series Blades

**Ultra X-Tended Cutting Edge™**
- Double Bevel Technology
- Reduces overall blade noise by up to 1.5 decibels
- Maximum mulching length

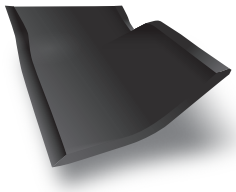

**Made From US Boron Steel**
- Perfect balance between durability & ductility
- Rockwell 43–48 HRc

**Superior Flatness and Straightness**
- Clean cut for manicured look

**Optimum Packaging**
- Labeling includes OEM & aftermarket cross references

## Sand Blades

**Heavy Duty for Abrasive Conditions**
- 2 to 3 times the life of a standard Oregon® blade when used in sandy and abrasive soil conditions
- Currently available for select 16-1/4", 18", & 21" Scag applications only

B

## Common Blade Measurements

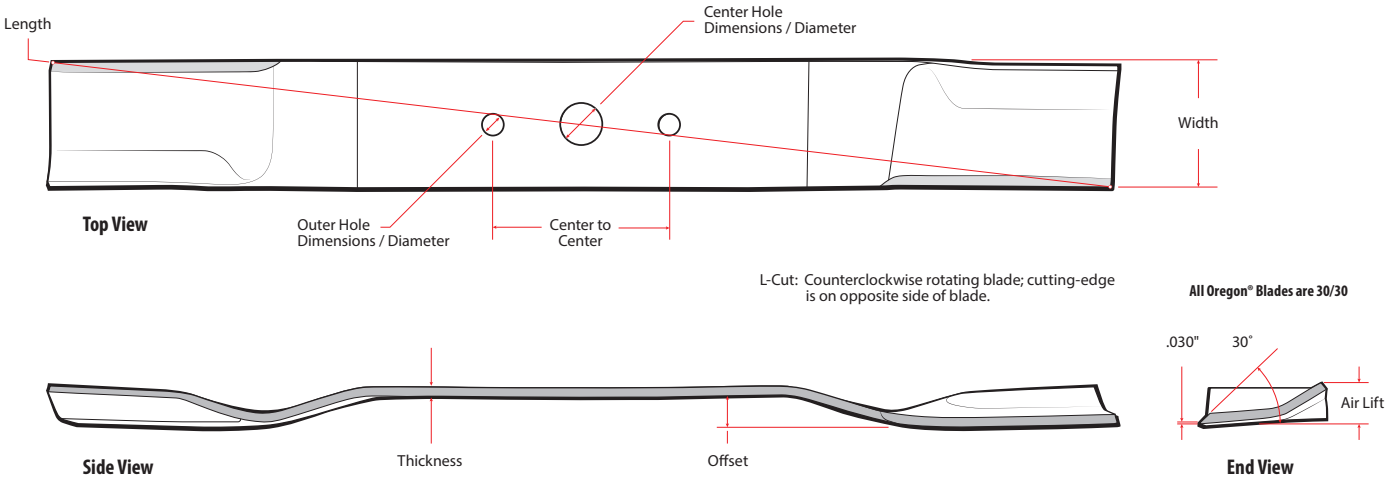


## Blade Arbor Hole Types

**5 or 7-Point Star**
Center holes may be 5 or 7-point star shaped.

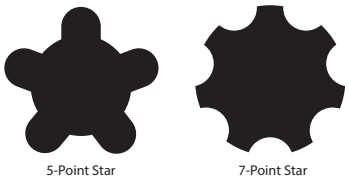


**Square or Rectangular**
The MTD built blades on many walk-behind lawn mowers have a "bow-tie" hole. In this case the Oregon replacement blade will have a rectangular center hole which will fit on the bow-tie pattern on the blade adapter.

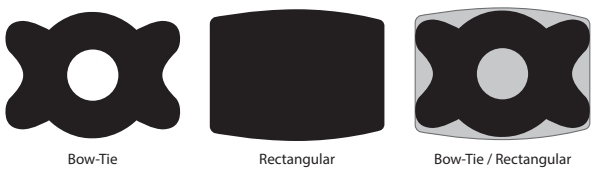


**MTD Blades**
The MTD built blades (Bolens, Cub Cadet, Troy-Bilt, White, Yard Machine and Yardman) may have a 6-point star. Oregon replacement blades will have a "Y" shaped center hole which will fit exactly on the 6-point star on the blade spindle.

**The two sizes of the 6-point star.**
If your blade spindle has a bolt and lock washer that holds the blade to the machine, you would use the 11/16" star or "Y" blade

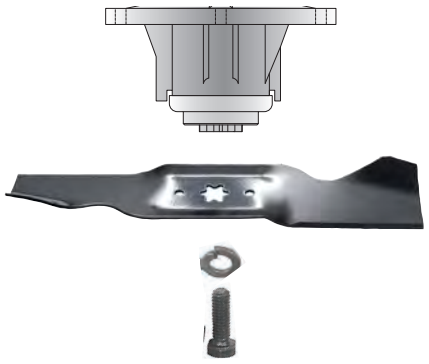

If your blade is secured with a large flange nut, then you would use the 5/8" star or "Y" blade

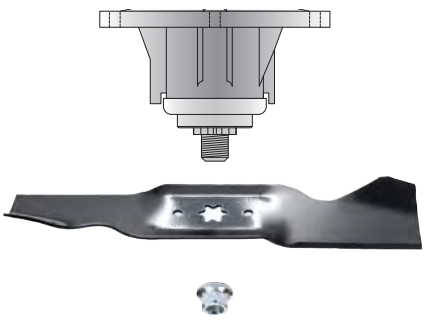

B

# Blades by Length

| OREGON | Length | Center Hole | Outer Hole | Center to Center | Width | Thickness | Offset | Air Lift | L-Cut | Type |
|---|---|---|---|---|---|---|---|---|---|---|
| **94-124** | 5-1/4 | 3/4 | | | 2.500 | 0.187 | 1/2 | 5/8 | | |
| **91-594** | 5-1/4 | 3/4 | | | 2.500 | 0.187 | 1/2 | 5/16 | | |
| **91-767** | 11-3/8 | 7/8 | | | 2.5 | 0.250 | 7/16 | 1-1/4 | L | |
| **96-349** | 11-15/16 | 3/8 | 5/16 | 2-3/8 | 2.5 | 0.203 | 0 | 3/4 | | G3™ |
| **91-802** | 12-1/8 | 3/4 X 5/8 | 1/4 | 1-5/8 | 2 | 0.203 | 0 | 7/8 | | |
| **96-632** | 12-1/8 | 3/4 X 5/8 | 1/4 | 1-5/8 | 2.5 | 0.203 | 0 | 3/4 | | G3™ |
| **91-636** | 12-3/16 | 5/8 | | | 2.5 | 0.203 | 0 | 1 | | |
| **96-661** | 12-3/16 | 5/8 | | | 2.5 | 0.203 | 0 | 1 | | G3™ |
| **91-310** | 13-3/4 | 3/8 | 5/16 | 2-3/8 | 2 | 0.164 | 0 | 1-1/16 | | |
| **92-039** | 13-3/4 | 5/8 | | | 2.5 | 0.203 | 0 | 3/4 | | |
| **90-643** | 13-7/8 | 3/4 | | | 2.5 | 0.203 | 0 | 3/4 | | G3™ |
| **91-244** | 13-7/8 | 5/8 | | | 2 | 0.203 | 1/8 | 1-1/16 | | |
| **91-805** | 13-7/8 | 3/4 | | | 2 | 0.203 | 0 | 1-1/16 | | |
| **92-040** | 13-7/8 | 5/8 | | | 2 | 0.203 | 1/8 | 1-1/16 | | |
| **96-040** | 13-7/8 | 5/8 | | | 2.25 | 0.203 | 0 | 3/4 | | G3™ |
| **96-374** | 14 | 5/8 | | | 2.5 | 0.250 | 0 | 3/4 | | G3™ |
| **91-265** | 14-1/4 | 5/8 | | | 2.5 | 0.203 | 0 | 1 | | |
| **96-324** | 14-1/4 | 5/8 | | | 2.5 | 0.203 | 0 | 1 | | G3™ |
| **91-500** | 14-3/8 | 11/16 | | | 2 | 0.203 | 0 | 13/16 | | |
| **396-714** | 14-1/2 | 5/8 | | | 3 | 0.250 | 0 | 1 | | G6® |
| **596-303** | 14-1/2 | 11/16 | | | 3 | 0.203 | 0 | 1 | | G5™ |
| **91-167** | 14-1/2 | 11/16 | | | 2.5 | 0.187 | 0 | 1-1/4 | | |
| **91-501** | 14-1/2 | 5/8 | | | 2.5 | 0.203 | 0 | 1-1/16 | | |
| **91-712** | 14-1/2 | 3/4 | 3/8 | 3-1/16 | 2 | 0.187 | 0 | 1-1/8 | L | |
| **91-804** | 14-1/2 | 3/4 | | | 2 | 0.203 | 0 | 7/8 | | |
| **92-217** | 14-1/2 | 5/8 | | | 2.5 | 0.203 | 5/16 | 1-1/8 | | |
| **96-303** | 14-1/2 | 11/16 | | | 2.5 | 0.203 | 0 | 1 | | G3™ |
| **96-808** | 14-1/2 | 5/8 | | | 2.5 | 0.203 | 5/16 | 3/4 | | G3™ |
| **95-010** | 14-9/16 | 1-1/4 | 1/2 | 3 | 2.5 | 0.187 | 0 | 1 | | |
| **595-088** | 14-5/8 | 5 pt. star | | | 3 | 0.164 | 0 | 1 | | G5™ |
| **95-084** | 14-5/8 | 5 pt. star | | | 2.5 | 0.203 | 0 | 1 | | |
| **95-088** | 14-5/8 | 5 pt. star | | | 2.5 | 0.203 | 0 | 3/4 | | G3™ |
| **98-056** | 14-13/16 | 11/16 6 pt. star | 5/16 | 2-1/2 | 3 | 0.120 | 5/16 | 1-1/8 | | |
| **98-069** | 14-13/16 | 5/8 6 pt. star | | | 3 | 0.120 | 5/16 | 1-3/16 | | |
| **98-486** | 14-13/16 | 3/8 | 5/16 | 2-1/2 | 3 | 0.149 | 5/16 | 1-1/4 | | |
| **98-670** | 14-13/16 | 5/8 6 pt. star | | | 2.5 | 0.187 | 5/16 | 3/4 | | G3™ |
| **91-327** | 14-7/8 | 3/4 | | | 3 | 0.203 | 5/16 | 1-1/4 | | |
| **91-342** | 14-7/8 | 7/16 | 1/2 | 1-5/8 | 2 | 0.149 | 1/4 | 13/16 | | |
| **95-058** | 14-7/8 | 5/8 | | | 2.5 | 0.203 | 0 | 1 | | |
| **98-061** | 14-7/8 | 5/8 6 pt. star | | | 2.5 | 0.149 | 7/16 | 1-3/16 | | |
| **98-083** | 14-7/8 | 3/4 | | | 2.5 | 0.203 | 7/16 | 1-1/8 | | |
| **98-084** | 14-7/8 | 5/8 6 pt. star | | | 2.5 | 0.203 | 7/16 | 1-1/8 | | |
| **98-637** | 14-7/8 | 5/8 6 pt. star | | | 2.5 | 0.187 | 7/16 | 3/4 | | G3™ |
| **491-530** | 14-15/16 | 11/16 | | | 2.5 | 0.203 | 0 | 1-1/4 | | |
| **496-399** | 14-15/16 | 11/16 | | | 2.5 | 0.203 | 0 | 3/4 | | G3™ |
| **391-608** | 15 | 5/8 | | | 3 | 0.250 | 0 | 1 | | G6® |
| **396-713** | 15 | 1/2 | | | 3 | 0.250 | 5/16 | 1 | | G6® |
| **91-536** | 15 | 1/2 | | | 2.5 | 0.250 | 5/16 | 1 | | |
| **91-557** | 15 | 1/2 | | | 2.5 | 0.250 | 5/16 | 3/4 | | |
| **91-608** | 15 | 5/8 | | | 2.5 | 0.250 | 0 | 1 | | |
| **92-150** | 15 | 1/2 | | | 2.5 | 0.203 | 5/16 | 1-1/4 | | |
| **96-343** | 15 | 1/2 | | | 2.5 | 0.203 | 5/16 | 1 | | G3™ |
| **392-142** | 15-1/8 | 1/2 | | | 3 | 0.250 | 0 | 1 | | G6® |
| **91-414** | 15-1/8 | 3/4 | | | 2.5 | 0.203 | 1/2 | 11/16 | | |
| **92-142** | 15-1/8 | 1/2 | | | 2.5 | 0.203 | 0 | 1 | | |
| **596-327** | 15-1/4 | 5/8 | | | 3 | 0.203 | 0 | 1 | | G5™ |
| **91-369** | 15-1/4 | 5/8 | | | 2.5 | 0.203 | 0 | 1 | | |
| **91-373** | 15-1/4 | 5/8 | | | 2.5 | 0.203 | 0 | 1 | | |

| OREGON | Length | Center Hole | Outer Hole | Center to Center | Width | Thickness | Offset | Air Lift | L-Cut | Type |
|---|---|---|---|---|---|---|---|---|---|---|
| **96-327** | 15-1/4 | 5/8 | | | 2.5 | 0.203 | 0 | 1 | | G3™ |
| **91-097** | 15-5/16 | 3/8 | 3/8 | 2-3/4 | 2 | 0.187 | 0 | 1 | | |
| **92-146** | 15-5/16 | 3/4 | 3/8 | 2-9/16 | 2 | 0.187 | 0 | 1 | | |
| **594-601** | 15-3/8 | 5/8 | 5/16 | 1-1/4 | 3 | 0.134 | 5/16 | 1 | | G5™ |
| **91-430** | 15-3/8 | 11/16 | 3/8 | 1-1/2 | 2 | 0.187 | 0 | 1 | | |
| **95-006** | 15-3/8 | 5 pt. star | | | 2.25 | 0.149 | 1/8 | 15/16 | | |
| **95-014** | 15-3/8 | 3/8 | | | 2.25 | 0.187 | 0 | 1 | | |
| **95-049** | 15-3/8 | 5 pt. star | | | 2.25 | 0.187 | 0 | 1 | | |
| **95-607** | 15-3/8 | 3/8 | | | 2.25 | 0.187 | 0 | 3/4 | | G3™ |
| **595-614** | 15-1/2 | 5 pt. star | | | 3 | 0.164 | 0 | 1 | | G5™ |
| **92-147** | 15-1/2 | 3/4 | | | 2.5 | 0.312 | 1/2 | 0 | | |
| **94-026** | 15-1/2 | 5/8 | | | 2.5 | 0.187 | 5/16 | 3/4 | | |
| **94-039** | 15-1/2 | 5/8 | | | 2.5 | 0.203 | 5/16 | 15/16 | | |
| **94-061** | 15-1/2 | 5/8 | | | 2.5 | 0.187 | 5/16 | 1 | | |
| **94-615** | 15-1/2 | 5/8 | | | 2.5 | 0.203 | 5/16 | 3/4 | | G3™ |
| **95-045** | 15-1/2 | 5 pt. star | | | 2.25 | 0.149 | 1/8 | 1 | | |
| **95-052** | 15-1/2 | 5 pt. star | | | 2.25 | 0.149 | 1/8 | 1 | | |
| **95-614** | 15-1/2 | 5 pt. star | | | 2.5 | 0.187 | 0 | 3/4 | | G3™ |
| **90-205** | 15-11/16 | 5/8 | | | 2.5 | 0.203 | 0 | 13/16 | | |
| **96-302** | 15-11/16 | 5/8 | | | 2.5 | 0.203 | 0 | 1 | | G3™ |
| **597-606** | 15-3/4 | 13/16 | | | 3 | 0.164 | 5/8 | 1 | | G5™ |
| **69-239-0** | 15-3/4 | 1 | 3/8 x 1/2 | 1-7/16 | 2.5 | 0.149 | 0 | 1 | | G3™ |
| **69-247-0** | 15-3/4 | 1 | 3/8 x 1/2 | 1-7/16 | 2.25 | 0.149 | 0 | 5/8 | | |
| **69-248-0** | 15-3/4 | 1 | 3/8 x 1/2 | 1-7/16 | 2.25 | 0.149 | 0 | 5/8 | | |
| **69-250-0** | 15-3/4 | 1 | 3/8 x 1/2 | 1-7/16 | 2.25 | 0.149 | 5/8 | 5/8 | | |
| **69-251-0** | 15-3/4 | 1 | 3/8 x 1/2 | 1-7/16 | 2.25 | 0.149 | 5/8 | 5/8 | | |
| **97-012** | 15-3/4 | 13/16 | | | 2.25 | 0.187 | 5/8 | 1 | | |
| **97-017** | 15-3/4 | 13/16 | | | 2.25 | 0.134 | 11/16 | 1-1/8 | | |
| **97-123** | 15-3/4 | 13/16 | | | 2.25 | 0.134 | 5/8 | 1 | | |
| **97-606** | 15-3/4 | 13/16 | | | 2.5 | 0.187 | 5/8 | 3/4 | | G3™ |
| **591-594** | 15-13/16 | 13/16 | | | 3 | 0.164 | 5/8 | 1 | | G5™ |
| **91-589** | 15-13/16 | 3/4 | | | 2.5 | 0.164 | 5/8 | 3/4 | | |
| **98-080** | 15-15/16 | 3/4 | | | 3 | 0.203 | 7/16 | 1-5/16 | | |
| **396-725** | 16 | 11/16 | | | 3 | 0.250 | 0 | 1 | | G6® |
| **596-373** | 16 | 3/4 | 5/16 | 2-1/2 | 3 | 0.187 | 1/2 | 1 | | G5™ |
| **91-073** | 16 | 3/4 | 5/16 | 2-1/2 | 2.5 | 0.203 | 9/16 | 1-1/8 | | |
| **91-389** | 16 | 11/16 | | | 2 | 0.203 | 0 | 13/16 | | |
| **91-448** | 16 | 11/16 | | | 2.5 | 0.203 | 0 | 15/16 | | |
| **91-615** | 16 | 1 | 3/8 | 2-9/16 | 2.5 | 0.203 | 0 | 1-1/4 | | |
| **96-394** | 16 | 11/16 | | | 2.5 | 0.203 | 0 | 1 | | G3™ |
| **96-397** | 16 | 1 | 3/8 | 2-9/16 | 2.5 | 0.203 | 0 | 1 | | G3™ |
| **90-644** | 16-1/16 | 3/4 | | | 2.5 | 0.203 | 0 | 3/4 | | G3™ |
| **91-806** | 16-1/16 | 3/4 | | | 2 | 0.203 | 0 | 15/16 | | |
| **96-013** | 16-1/16 | 3/8 | | | 4 | 0.134 | 0 | 1-1/4 | | |
| **590-685** | 16-1/8 | 3/4 | 3/8 | 2-9/16 | 3 | 0.187 | 0 | 1 | | G5™ |
| **599-132** | 16-1/8 | 3/4 | | | 3 | 0.203 | 0 | 1 | | G5™ |
| **90-685** | 16-1/8 | 3/4 | 3/8 | 2-9/16 | 2.5 | 0.203 | 0 | 3/4 | | G3™ |
| **91-705** | 16-1/8 | 3/4 | 3/8 | 2-9/16 | 2 | 0.203 | 0 | 1-1/16 | | |
| **91-723** | 16-1/8 | 3/4 | 3/8 | 2-9/16 | 2 | 0.203 | 0 | 1-1/8 | | |
| **99-132** | 16-1/8 | 3/4 | | | 2.5 | 0.203 | 0 | 1-1/16 | | |
| **396-809** | 16-3/16 | 5/8 | | | 3 | 0.250 | 3/8 | 1 | | G6® |
| **596-816** | 16-3/16 | 5/8 | | | 3 | 0.203 | 3/8 | 1 | | G5™ |
| **92-153** | 16-3/16 | 5/8 | | | 2.5 | 0.250 | 5/16 | 1-1/8 | | |
| **92-919** | 16-1/4 | 15/16 | | | 3.000 | 0.203 | 0 | 5/8 | | |
| **198-063** | 16-1/4 | 5/8 6 pt. star | | | 2.5 | 0.149 | 7/16 | 1-1/8 | | |
| **392-205** | 16-1/4 | 15/16 | | | 3 | 0.250 | 3/8 | 1 | | G6® |
| **396-321** | 16-1/4 | 15/16 | | | 3 | 0.250 | 0 | 1 | | G6® |
| **396-716** | 16-1/4 | 5/8 | | | 3 | 0.250 | 0 | 1 | | G6® |

# Blades by Length

| OREGON® | Length | Center Hole | Outer Hole | Center to Center | Width | Thickness | Offset | Air Lift | L-Cut | Type |
|---|---|---|---|---|---|---|---|---|---|---|
| **492-726** | 16-1/4 | 15/16 | | | 3 | 0.203 | 3/8 | 1-1/16 | | |
| **593-600** | 16-1/4 | 5/8 | | | 3 | 0.203 | 1/2 | 1 | | G5™ |
| **595-087** | 16-1/4 | 5 pt. star | | | 3 | 0.164 | 0 | 1 | | G5™ |
| **596-310** | 16-1/4 | 5/8 | | | 3 | 0.203 | 0 | 1 | | G5™ |
| **596-321** | 16-1/4 | 15/16 | | | 3 | 0.203 | 0 | 1 | | G5™ |
| **598-627** | 16-1/4 | 11/16 6 pt. star | 5/16 | 2-1/2 | 3 | 0.164 | 5/16 | 1 | | G5™ |
| **598-634** | 16-1/4 | 5/8 6 pt. star | | | 3 | 0.164 | 5/16 | 1 | | G5™ |
| **598-640** | 16-1/4 | 5/8 6 pt. star | | | 3 | 0.164 | 7/16 | 1 | | G5™ |
| **91-180** | 16-1/4 | 5/8 | | | 2.5 | 0.187 | 0 | 1 | | |
| **91-183** | 16-1/4 | 5/8 | | | 2.5 | 0.250 | 0 | 1 | | |
| **91-313** | 16-1/4 | 5/8 | | | 2.5 | 0.203 | 0 | 1 | | |
| **91-330** | 16-1/4 | 3/4 | | | 3 | 0.203 | 5/16 | 1-3/8 | | |
| **91-368** | 16-1/4 | 5/8 | | | 2.5 | 0.203 | 0 | 1 | | |
| **91-480** | 16-1/4 | 5/8 | 1/4 | 1-5/8 | 2.5 | 0.250 | 0 | 1-3/16 | | |
| **92-026** | 16-1/4 | 15/16 | | | 2.5 | 0.203 | 0 | 1 | | |
| **92-029** | 16-1/4 | 15/16 | | | 2.5 | 0.203 | 0 | 1 | | |
| **93-005** | 16-1/4 | 5/8 | 1/4 | 1-5/8 | 2.5 | 0.250 | 0 | 1-3/16 | | |
| **93-009** | 16-1/4 | 5/8 | | | 2.5 | 0.203 | 1/2 | 1-1/8 | | |
| **95-087** | 16-1/4 | 5 pt. star | | | 2.5 | 0.203 | 0 | 1 | | |
| **96-310** | 16-1/4 | 5/8 | | | 2.5 | 0.203 | 0 | 3/4 | | G3™ |
| **96-321** | 16-1/4 | 15/16 | | | 2.5 | 0.203 | 0 | 1 | | G3™ |
| **98-054** | 16-1/4 | 5/8 6 pt. star | | | 3 | 0.120 | 5/16 | 1-3/16 | | |
| **98-057** | 16-1/4 | 11/16 6 pt. star | 5/16 | 2-1/2 | 3 | 0.120 | 5/16 | 1-3/16 | | |
| **98-085** | 16-1/4 | 5/8 6 pt. star | | | 2.5 | 0.203 | 7/16 | 1-1/8 | | |
| **98-487** | 16-1/4 | 3/8 | 5/16 | 2-1/2 | 3 | 0.149 | 5/16 | 1-3/16 | | |
| **98-634** | 16-1/4 | 5/8 6 pt. star | | | 2.5 | 0.187 | 5/16 | 3/4 | | G3™ |
| **98-640** | 16-1/4 | 5/8 6 pt. star | | | 2.5 | 0.187 | 7/16 | 3/4 | | G3™ |
| **99-127** | 16-1/4 | 5/8 | | | 2.5 | 0.203 | 0 | 1-1/16 | | |
| **98-082** | 16-5/16 | 3/4 | | | 2.5 | 0.203 | 7/16 | 1-1/8 | | |
| **91-266** | 16-3/8 | 5/8 | | | 2.5 | 0.203 | 0 | 1 | | |
| **96-328** | 16-3/8 | 5/8 | | | 2.5 | 0.203 | 0 | 1 | | G3™ |
| **94-125** | 16-1/2 | 5/8 | | | 2.500 | 0.250 | 0 | 1-1/8 | | |
| **92-156** | 16-1/2 | 5/8 | | | 3.000 | 0.203 | 0 | 1-1/2 | | |
| **391-606** | 16-1/2 | 13/16 | | | 3 | 0.250 | 0 | 1 | | G6® |
| **391-614** | 16-1/2 | 3/4 | | | 3 | 0.250 | 0 | 1 | | G6® |
| **392-165** | 16-1/2 | 5/8 | | | 3 | 0.250 | 1/2 | 1 | | G6® |
| **396-735** | 16-1/2 | 5/8 | | | 3 | 0.250 | 0 | 1 | | G6® |
| **596-308** | 16-1/2 | 5/8 | | | 3 | 0.203 | 0 | 1 | | G5™ |
| **596-330** | 16-1/2 | 3/4 | 5/16 | 2-1/2 | 3 | 0.187 | 1/2 | 1 | | G5™ |
| **91-056** | 16-1/2 | 3/4 | 5/16 | 2-1/2 | 2.5 | 0.203 | 1/2 | 1-5/16 | | |
| **91-606** | 16-1/2 | 13/16 | | | 2.25 | 0.149 | 0 | 5/8 | | |
| **91-620** | 16-1/2 | 5/8 | | | 2.5 | 0.203 | 0 | 1 | | |
| **91-621** | 16-1/2 | 5/8 | | | 3 | 0.203 | 0 | 1-1/2 | | |
| **92-036** | 16-1/2 | 5/8 | | | 2.5 | 0.250 | 0 | 1 | | |
| **92-054** | 16-1/2 | 9/16 | | | 2.5 | 0.203 | 0 | 1 | | |
| **92-145** | 16-1/2 | 5/8 | | | 2.5 | 0.203 | 0 | 1 | | |
| **92-165** | 16-1/2 | 5/8 | | | 2.5 | 0.203 | 1/2 | 1 | | |
| **92-207** | 16-1/2 | 5/8 | | | 2.5 | 0.203 | 0 | 13/16 | | |
| **92-737** | 16-1/2 | 5/8 | | | 2.5 | 0.203 | 0 | 1-1/16 | | |
| **92-743** | 16-1/2 | 5/8 | | | 2.5 | 0.203 | 0 | 1 | | |
| **96-308** | 16-1/2 | 5/8 | | | 2.5 | 0.203 | 0 | 1 | | G3™ |
| **96-381** | 16-1/2 | 3/4 | | | 3 | 0.203 | 7/16 | 3/4 | | G3™ |
| **98-081** | 16-1/2 | 3/4 | | | 3 | 0.203 | 7/16 | 1-3/8 | | |
| **99-120** | 16-1/2 | 3/8 | | | 2.75 | 0.164 | 1/4 | 7/8 | | |
| **99-126** | 16-1/2 | 5/8 | | | 2.5 | 0.203 | 0 | 1-1/16 | | |
| **99-500** | 16-1/2 | 5/8 | | | 3 | 0.203 | 0 | 1-3/16 | | |
| **392-047** | 16-9/16 | 11/16 | | | 3 | 0.250 | 1/2 | 1 | | G6® |
| **90-697** | 16-9/16 | 3/4 | 5/16 | 2-1/2 | 2.5 | 0.203 | 1/2 | 3/4 | | G3™ |

| OREGON | Length | Center Hole | Outer Hole | Center to Center | Width | Thickness | Offset | Air Lift | L-Cut | Type |
|---|---|---|---|---|---|---|---|---|---|---|
| **91-003** | 16-9/16 | 3/4 | | | 2.5 | 0.203 | 7/16 | 7/8 | | |
| **91-333** | 16-9/16 | 3/4 | 5/16 | 2-1/2 | 2.5 | 0.203 | 1/2 | 15/16 | | |
| **91-401** | 16-9/16 | 13/16 | | | 2.5 | 0.203 | 5/16 | 13/16 | | |
| **91-447** | 16-9/16 | 13/16 | | | 2.5 | 0.203 | 7/16 | 1-1/16 | | |
| **92-047** | 16-9/16 | 11/16 | | | 2.5 | 0.250 | 1/2 | 1-1/8 | | |
| **95-011** | 16-9/16 | 1-1/4 | 1/2 | 3 | 2.5 | 0.187 | 0 | 1 | | |
| **96-047** | 16-9/16 | 11/16 | | | 2.5 | 0.203 | 1/2 | 3/4 | | G3™ |
| **96-618** | 16-9/16 | 13/16 | | | 2.5 | 0.203 | 7/16 | 1 | | G3™ |
| **391-613** | 16-5/8 | 1-1/8 | | | 3 | 0.250 | 1/2 | 1 | | G6® |
| **391-617** | 16-5/8 | 11/16 | | | 3 | 0.250 | 5/16 | 1 | | G6® |
| **392-300** | 16-5/8 | 3/4 | | | 3 | 0.250 | 5/8 | 1 | | G6® |
| **396-732** | 16-5/8 | 13/16 | | | 3 | 0.250 | 3/8 | 1 | | G6® |
| **592-124** | 16-5/8 | 7/8 | | | 3 | 0.203 | 5/8 | 1 | | G5™ |
| **596-332** | 16-5/8 | 13/16 | | | 3 | 0.203 | 3/8 | 1 | | G5™ |
| **91-381** | 16-5/8 | 13/16 | | | 2.5 | 0.203 | 3/8 | 1-3/16 | | |
| **91-383** | 16-5/8 | 13/16 | | | 2.5 | 0.203 | 1/4 | 3/4 | | |
| **91-613** | 16-5/8 | 1-1/8 | | | 2.5 | 0.250 | 9/16 | 1-1/8 | | |
| **92-124** | 16-5/8 | 7/8 | | | 2.5 | 0.250 | 9/16 | 1-1/8 | | |
| **92-300** | 16-5/8 | 3/4 | | | 2.5 | 0.250 | 11/16 | 1-1/8 | | |
| **96-332** | 16-5/8 | 13/16 | | | 2.5 | 0.203 | 3/8 | 1 | | G3™ |
| **195-062** | 16-11/16 | 5 pt. star | 5/16 | 3-15/16 | 2.5 | 0.203 | 0 | 1-1/4 | | |
| **596-615** | 16-11/16 | 5 pt. star | | | 3 | 0.187 | 0 | 1 | | G5™ |
| **91-433** | 16-11/16 | 11/16 | | | 2 | 0.203 | 0 | 1-1/16 | | |
| **91-435** | 16-11/16 | 11/16 | | | 2 | 0.250 | 3/8 | 1-1/16 | | |
| **95-068** | 16-11/16 | 5 pt. star | | | 2.5 | 0.203 | 5/16 | 13/16 | | |
| **96-603** | 16-11/16 | 3/4 | | | 2.5 | 0.203 | 11/16 | 3/4 | | G3™ |
| **96-615** | 16-11/16 | 5 pt. star | | | 2.5 | 0.203 | 0 | 1 | | G3™ |
| **69-241-0** | 16-3/4 | 1 | 3/8 x 1/2 | 1-7/16 | 2.5 | 0.149 | 0 | 1 | | G3™ |
| **69-249-0** | 16-3/4 | 1 | 3/8 x 1/2 | 1-7/16 | 2.25 | 0.149 | 0 | 5/8 | | |
| **69-252-0** | 16-3/4 | 1 | 3/8 x 1/2 | 1-7/16 | 2.25 | 0.149 | 5/8 | 5/8 | | |
| **91-703** | 16-3/4 | 1 | | | 2.5 | 0.203 | 9/16 | 1-1/8 | L | |
| **91-087** | 16-7/8 | 1 | | | 2.5 | 0.203 | 13/16 | 13/16 | | |
| **92-175** | 16-7/8 | 1 | | | 2.5 | 0.250 | 3/4 | 13/16 | L | |
| **92-180** | 16-15/16 | 5/8 | | | 2.500 | 0.203 | 5/16 | 1 | | |
| **396-354** | 16-15/16 | 13/16 | | | 3 | 0.250 | 1/2 | 1 | | G6® |
| **592-160** | 16-15/16 | 5/8 | | | 3 | 0.187 | 5/16 | 1 | | G5™ |
| **596-354** | 16-15/16 | 13/16 | | | 3 | 0.203 | 5/8 | 1 | | G5™ |
| **90-348** | 16-15/16 | 13/16 | | | 2.5 | 0.203 | 9/16 | 1-1/8 | | |
| **91-096** | 16-15/16 | 3/8 | 3/8 | 2-3/4 | 2 | 0.187 | 0 | 1 | | |
| **91-123** | 16-15/16 | 1/2 | | | 2.5 | 0.203 | 5/16 | 1-5/16 | | |
| **91-126** | 16-15/16 | 1/2 | | | 2.5 | 0.203 | 5/16 | 3/4 | | |
| **92-160** | 16-15/16 | 5/8 | | | 2.5 | 0.203 | 5/16 | 1-1/4 | | |
| **92-161** | 16-15/16 | 5/8 | | | 2.5 | 0.203 | 5/16 | 3/4 | | |
| **96-354** | 16-15/16 | 13/16 | | | 2.5 | 0.203 | 9/16 | 3/4 | | G3™ |
| **99-617** | 16-15/16 | 1/2 | | | 2.5 | 0.203 | 5/16 | 3/4 | | G3™ |
| **392-139** | 17 | 3/4 | | | 3 | 0.250 | 7/16 | 1 | | G6® |
| **396-723** | 17 | 5/8 | | | 3 | 0.250 | 0 | 1 | | G6® |
| **396-805** | 17 | 5/8 | | | 3 | 0.250 | 5/16 | 1 | | G6® |
| **590-669** | 17 | 11/16 | | | 3 | 0.203 | 0 | 1 | | G5™ |
| **592-616** | 17 | 7 pt. star | | | 3 | 0.164 | 5/16 | 1 | | G5™ |
| **596-323** | 17 | 5/8 | | | 3 | 0.203 | 0 | 1 | | G5™ |
| **90-669** | 17 | 11/16 | | | 2.5 | 0.203 | 0 | 3/4 | | G3™ |
| **91-108** | 17 | 11/16 | 3/8 | 3-11/16 | 2.5 | 0.164 | 3/8 | 1-3/16 | | |
| **91-117** | 17 | 7/8 x 1-1/4 | | | 2.5 | 0.187 | 7/16 | 1 | | |
| **91-146** | 17 | 11/16 | | | 2.5 | 0.187 | 0 | 1-1/4 | | |
| **91-242** | 17 | 5/8 | | | 2 | 0.203 | 5/16 | 1-1/8 | | |
| **91-502** | 17 | 5/8 | | | 2.5 | 0.203 | 0 | 1-3/16 | | |
| **91-505** | 17 | 5/8 | | | 2.5 | 0.250 | 0 | 1-1/8 | | |

# Blades by Length

| OREGON | Length | Center Hole | Outer Hole | Center to Center | Width | Thickness | Offset | Air Lift | L-Cut | Type |
|---|---|---|---|---|---|---|---|---|---|---|
| **91-508** | 17 | 5/8 | | | 2.5 | 0.250 | 0 | 1-3/16 | | |
| **91-525** | 17 | 5/8 | | | 2.5 | 0.250 | 5/16 | 1-3/16 | | |
| **91-715** | 17 | 3/4 | 3/8 | 2-9/16 | 2 | 0.187 | 0 | 1 | | |
| **92-104** | 17 | 7 pt. star | | | 2.75 | 0.164 | 3/16 | 1-3/16 | | |
| **92-139** | 17 | 3/4 | | | 3 | 0.203 | 7/16 | 1-5/16 | | |
| **92-616** | 17 | 7 pt. star | | | 2.5 | 0.187 | 1/4 | 3/4 | | G3™ |
| **92-675** | 17 | 11/16 | 3/8 | 3-11/16 | 2.5 | 0.187 | 3/8 | 1-3/16 | | G3™ |
| **96-323** | 17 | 5/8 | | | 2.5 | 0.203 | 0 | 1 | | G3™ |
| **191-108** | 17-1/16 | 11/16 | 3/8 | 3-11/16 | 2.51 | 0.164 | 1/4 | 1 | | |
| **396-770** | 17-1/16 | 7/8 | | | 3 | 0.250 | 1/2 | 1 | | G6® |
| **91-079** | 17-1/16 | 7/8 | | | 2.5 | 0.250 | 7/16 | 1-1/16 | | |
| **91-496** | 17-1/16 | 11/16 | 3/8 | 3-11/16 | 2.5 | 0.164 | 1/4 | 1-3/8 | | |
| **91-586** | 17-1/16 | 7 pt. Star | | | 2.5 | 0.187 | 3/16 | 1-3/8 | | |
| **92-105** | 17-1/16 | 7 pt. star | | | 2.75 | 0.164 | 1/4 | 1-1/4 | | |
| **92-144** | 17-1/16 | 7/8 | | | 3 | 0.250 | 7/16 | 1-5/16 | | |
| **92-158** | 17-1/16 | 5/8 | | | 2.5 | 0.250 | 5/16 | 1-1/8 | | |
| **396-738** | 17-3/16 | 11/16 | | | 3 | 0.250 | 0 | 1 | | G6® |
| **90-656** | 17-3/16 | 3/4 | | | 2.5 | 0.203 | 7/16 | 3/4 | | G3™ |
| **91-393** | 17-3/16 | 11/16 | | | 2.5 | 0.203 | 0 | 13/16 | | |
| **91-415** | 17-3/16 | 3/4 | | | 2.5 | 0.203 | 1/2 | 11/16 | | |
| **98-152** | 17-1/4 | 5/8 5 pt. star | | | 2.500 | 0.164 | 9-16 | 1-3/16 | | |
| **392-141** | 17-1/4 | 1/2 | | | 3 | 0.250 | 0 | 1 | | G6® |
| **92-141** | 17-1/4 | 1/2 | | | 2.5 | 0.203 | 0 | 1 | | |
| **98-037** | 17-1/4 | 3/8 | 5/16 | 2-1/2 | 2.5 | 0.187 | 5/16 | 1-1/8 | | |
| **598-064** | 17-5/16 | 5/8 6 pt. star | | | 3 | 0.149 | 5/16 | 1 | | G5™ |
| **98-064-1** | 17-5/16 | 5/8 6 pt. star | | | 2.5 | 0.187 | 1/4 | 1-3/16 | | |
| **595-609** | 17-3/8 | 5 pt. star | | | 3 | 0.164 | 0 | 1 | | G5™ |
| **95-018** | 17-3/8 | 5 pt. star | | | 2.25 | 0.149 | 1/8 | 15/16 | | |
| **95-027** | 17-3/8 | 3/8 | | | 2.25 | 0.187 | 0 | 1 | | |
| **95-050** | 17-3/8 | 5 pt. star | | | 2.25 | 0.187 | 0 | 1 | | |
| **95-609** | 17-3/8 | 5 pt. star | | | 2.5 | 0.187 | 0 | 3/4 | | G3™ |
| **92-912** | 17-1/2 | 15/16 | | | 3.000 | 0.203 | 3/8 | 1 | | |
| **392-206** | 17-1/2 | 15/16 | | | 3 | 0.250 | 3/8 | 1 | | G6® |
| **492-731** | 17-1/2 | 15/16 | | | 3 | 0.203 | 3/8 | 1-1/16 | | |
| **594-078** | 17-1/2 | 5/8 | | | 3 | 0.164 | 3/8 | 1 | | G5™ |
| **594-085** | 17-1/2 | 5/8 | | | 3 | 0.203 | 0 | 1 | | G5™ |
| **91-573** | 17-1/2 | 3/8 | 3/8 | 3 | 2.5 | 0.187 | 1/2 | 3/4 | | G3™ |
| **94-059** | 17-1/2 | 5/8 | | | 2.25 | 0.164 | 7/16 | 1-3/16 | | |
| **94-063** | 17-1/2 | 5/8 | | | 2.25 | 0.164 | 1/2 | 15/16 | | |
| **94-085** | 17-1/2 | 5/8 | | | 2.5 | 0.250 | 0 | 1 | | |
| **94-128** | 17-1/2 | 5/8 | | | 2.25 | 0.164 | 5/16 | 1-1/4 | | |
| **96-382** | 17-1/2 | 5/8 | | | 2.25 | 0.187 | 7/16 | 3/4 | | G3™ |
| **97-018** | 17-11/16 | 13/16 | | | 2.25 | 0.149 | 3/8 | 1-1/8 | | |
| **198-086** | 17-3/4 | 5/8 6 pt. star | | | 2.5 | 0.149 | 7/8 | 3/4 | | |
| **595-077** | 17-3/4 | 5 pt. star | | | 3 | 0.164 | 0 | 1 | | G5™ |
| **69-242-0** | 17-3/4 | 1 | 3/8 x 1/2 | 1-7/16 | 2.5 | 0.149 | 0 | 1 | | G3™ |
| **69-253-0** | 17-3/4 | 1 | 3/8 x 1/2 | 1-7/16 | 2.25 | 0.149 | 5/8 | 5/8 | | |
| **69-258-0** | 17-3/4 | 1 | 3/8 x 1/2 | 1-7/16 | 2.25 | 0.149 | 0 | 5/8 | | |
| **69-263-0** | 17-3/4 | 1 | 3/8 x 1/2 | 1-7/16 | 2.5 | 0.149 | 5/8 | 1 | | G3™ |
| **90-142** | 17-3/4 | 3/8 | 3/8 x 1-3/8 | 2-1/2 | 2.25 | 0.149 | 1/8 | 5/8 | | |
| **95-077** | 17-3/4 | 5 pt. star | | | 2.5 | 0.203 | 0 | 1 | | |
| **596-387** | 17-13/16 | 3/4 | | | 3 | 0.164 | 15/16 | 1 | | G5™ |
| **92-174** | 17-13/16 | 5/8 | | | 2.5 | 0.203 | 0 | 7/8 | | |
| **96-387** | 17-13/16 | 3/4 | | | 2.5 | 0.187 | 1 | 3/4 | | G3™ |
| **92-136** | 17-7/8 | 5/8 | | | 3.000 | 0.203 | 0 | 1-1/2 | | |
| **396-704** | 17-7/8 | 5/8 | | | 3 | 0.250 | 0 | 1 | | G6® |
| **591-938** | 17-7/8 | 5/8 6 pt. star | | | 3 | 0.164 | 15/16 | 1 | | G5™ |
| **592-015** | 17-7/8 | 3/4 | | | 3 | 0.164 | 0 | 1 | | G5™ |

| OREGON | Length | Center Hole | Outer Hole | Center to Center | Width | Thickness | Offset | Air Lift | L-Cut | Type |
|---|---|---|---|---|---|---|---|---|---|---|
| **596-704** | 17-7/8 | 5/8 | | | 3 | 0.203 | 0 | 1 | | G5™ |
| **90-206** | 17-7/8 | 5/8 | | | 2.5 | 0.203 | 0 | 13/16 | | |
| **90-207** | 17-7/8 | 5/8 | | | 3 | 0.250 | 5/8 | 1 | | |
| **90-618** | 17-7/8 | 3/8 | 3/8 x 1-3/8 | 2-1/2 | 2.25 | 0.149 | 1/4 | 5/8 | | |
| **91-178** | 17-7/8 | 1/2 | | | 2.75 | 0.187 | 9/16 | 3/4 | | |
| **91-938** | 17-7/8 | 5/8 6 pt. star | | | 2.5 | 0.187 | 15/16 | 3/4 | | G3™ |
| **92-015** | 17-7/8 | 3/4 | | | 2.5 | 0.203 | 0 | 1 | | |
| **92-044** | 17-7/8 | 5/8 | | | 2.5 | 0.203 | 0 | 1-1/16 | | |
| **92-211** | 17-7/8 | 5/8 | | | 2.25 | 0.187 | 1/16 | 15/16 | | |
| **92-212** | 17-7/8 | 5/8 | | | 2.5 | 0.203 | 0 | 1 | | |
| **96-318** | 17-7/8 | 5/8 | | | 2.5 | 0.203 | 0 | 3/4 | | G3™ |
| **98-087** | 17-7/8 | 3/4 | | | 2.5 | 0.149 | 1 | 1-1/8 | | |
| **98-094** | 17-7/8 | bow-tie | | | 2.5 | 0.149 | 1 | 1-1/8 | | |
| **98-097** | 17-7/8 | 5/8 6 pt. star | | | 2.5 | 0.149 | 15/16 | 1-3/8 | | |
| **98-671** | 17-7/8 | bow-tie | 5/16 | 2-1/2 | 2.5 | 0.149 | 1 | 3/4 | | G3™ |
| **94-132** | 18 | 5/8 | | | 2.500 | 0.250 | 0 | 1-1/8 | | |
| **94-135** | 18 | 5/8 | | | 2.500 | 0.250 | 0 | 11/16 | | |
| **393-601** | 18 | 5/8 | | | 3 | 0.250 | 1/2 | 1 | | G6® |
| **396-322** | 18 | 15/16 | | | 3 | 0.250 | 0 | 1 | | G6® |
| **396-726** | 18 | 5/8 | | | 3 | 0.250 | 0 | 1 | | G6® |
| **396-729** | 18 | 1/2 | | | 3 | 0.250 | 5/16 | 1 | | G6® |
| **396-806** | 18 | 5/8 | | | 3 | 0.250 | 5/16 | 1 | | G6® |
| **41-104** | 18 | 5/8 | | | 2.5 | 0.203 | 3/4 | 3/4 | | |
| **593-601** | 18 | 5/8 | | | 3 | 0.203 | 1/2 | 1 | | G5™ |
| **595-085** | 18 | 5 pt. star | | | 3 | 0.164 | 0 | 1 | | G5™ |
| **596-322** | 18 | 15/16 | | | 3 | 0.203 | 0 | 1 | | G5™ |
| **596-329** | 18 | 1/2 | | | 3 | 0.203 | 5/16 | 1 | | G5™ |
| **596-344** | 18 | 5/8 | | | 3 | 0.203 | 0 | 1 | | G5™ |
| **596-817** | 18 | 5/8 | | | 3 | 0.203 | 5/16 | 1 | | G5™ |
| **91-039** | 18 | 5/8 | | | 2.5 | 0.203 | 1/2 | 1 | | |
| **91-170** | 18 | 1/2 | | | 2.5 | 0.203 | 0 | 1 | | |
| **91-181** | 18 | 5/8 | | | 2.5 | 0.187 | 0 | 1 | | |
| **91-184** | 18 | 5/8 | | | 2.5 | 0.250 | 0 | 1 | | |
| **91-218** | 18 | 5/8 | | | 2.5 | 0.164 | 0 | 1 | | |
| **91-235** | 18 | 5/8 | | | 2.5 | 0.250 | 0 | 7/8 | | |
| **91-256** | 18 | 5/8 | | | 2.5 | 0.203 | 0 | 1 | | |
| **91-312** | 18 | 5/8 | | | 2.5 | 0.203 | 0 | 1 | | |
| **91-335** | 18 | 5/8 | | | 2.5 | 0.203 | 0 | 1 | | |
| **91-532** | 18 | 1/2 | | | 2.5 | 0.250 | 5/16 | 1 | | |
| **91-535** | 18 | 1/2 | | | 2.5 | 0.250 | 5/16 | 1-3/16 | | |
| **91-538** | 18 | 1/2 | | | 2.5 | 0.203 | 0 | 1 | | |
| **91-558** | 18 | 1/2 | | | 2.5 | 0.250 | 5/16 | 3/4 | | |
| **91-622** | 18 | 5/8 | | | 2.5 | 0.203 | 0 | 1 | | |
| **91-623** | 18 | 5/8 | | | 3 | 0.203 | 0 | 1-1/2 | | |
| **91-637** | 18 | 5/8 | | | 2.5 | 0.203 | 0 | 1 | | |
| **92-027** | 18 | 15/16 | | | 2.5 | 0.203 | 0 | 1 | | |
| **92-030** | 18 | 15/16 | | | 2.5 | 0.203 | 0 | 1 | | |
| **92-151** | 18 | 5/8 | | | 2.5 | 0.250 | 5/16 | 1-1/8 | | |
| **93-006** | 18 | 5/8 | 1/4 | 1-5/8 | 2.5 | 0.250 | 0 | 1-3/16 | | |
| **93-010** | 18 | 5/8 | | | 2.5 | 0.203 | 1/2 | 1-1/8 | | |
| **93-601** | 18 | 5/8 | | | 2.5 | 0.203 | 1/2 | 3/4 | | G3™ |
| **94-018** | 18 | 1/2 | | | 2.5 | 0.187 | 3/16 | 11/16 | | |
| **94-022** | 18 | 1/2 | | | 2.5 | 0.187 | 3/16 | 1 | | |
| **94-053** | 18 | 5/8 | | | 2.5 | 0.250 | 0 | 1 | | |
| **94-064** | 18 | 5/8 | | | 2.5 | 0.187 | 3/16 | 11/16 | | |
| **94-618** | 18 | 1/2 | | | 2.5 | 0.203 | 3/16 | 3/4 | | G3™ |
| **95-085** | 18 | 5 pt. star | | | 2.5 | 0.203 | 0 | 1 | | |
| **96-322** | 18 | 15/16 | | | 2.5 | 0.203 | 0 | 1 | | G3™ |

# Blades by Length

| OREGON | Length | Center Hole | Outer Hole | Center to Center | Width | Thickness | Offset | Air Lift | L-Cut | Type |
|---|---|---|---|---|---|---|---|---|---|---|
| **96-329** | 18 | 1/2 | | | 2.5 | 0.203 | 5/16 | 1 | | G3™ |
| **96-344** | 18 | 5/8 | | | 2.5 | 0.203 | 0 | 3/4 | | G3™ |
| **96-395** | 18 | 5/8 | | | 2.5 | 0.203 | 3/16 | 3/4 | | G3™ |
| **98-065** | 18 | bow-tie | 5/16 | 2-1/2 | 2.25 | 0.134 | 5/16 | 1-1/8 | | |
| **99-501** | 18 | 5/8 | | | 3 | 0.203 | 0 | 1-3/16 | | |
| **390-698** | 18-1/8 | 3/4 | 3/8 | 2-9/16 | 3 | 0.250 | 0 | 1 | | G6® |
| **590-698** | 18-1/8 | 3/4 | 3/8 | 2-9-16 | 3 | 0.187 | 0 | 1 | | G5™ |
| **90-698** | 18-1/8 | 3/4 | 3/8 | 2-9/16 | 2.5 | 0.203 | 0 | 3/4 | | G3™ |
| **91-706** | 18-1/8 | 3/4 | 3/8 | 2-9/16 | 2 | 0.203 | 0 | 1 | | |
| **92-135** | 18-1/8 | 1/2 | | | 2.5 | 0.203 | 0 | 1 | | |
| **595-613** | 18-3/16 | 5 pt. star | | | 3 | 0.164 | 0 | 1 | | G5™ |
| **95-026** | 18-3/16 | 5 pt. star | | | 2.25 | 0.187 | 1/8 | 1 | | |
| **95-034** | 18-3/16 | 3/8 | 3/8 | 10 | 2.5 | 0.187 | 0 | 7/8 | | |
| **95-036** | 18-3/16 | 5 pt. star | | | 2.25 | 0.134 | 1/8 | 1 | | |
| **95-613** | 18-3/16 | 5 pt. star | | | 2.5 | 0.187 | 0 | 3/4 | | G3™ |
| **97-105** | 18-3/16 | 7/8 X 1 | | | 2.25 | 0.149 | 3/16 | 15/16 | | |
| **98-496** | 18-5/16 | 3/8 | 5/16 | 2-1/2 | 3 | 0.149 | 5/16 | 1-1/8 | | |
| **92-179** | 18-3/8 | 1/2 | | | 2.500 | 0.203 | 5/16 | 3/4 | | |
| **92-154** | 18-3/8 | 5/8 | | | 2.500 | 0.203 | 5/16 | 1 | | |
| **592-137** | 18-3/8 | 5/8 | | | 3 | 0.187 | 5/16 | 1 | | G5™ |
| **91-129** | 18-3/8 | 1/2 | | | 2.5 | 0.203 | 5/16 | 1-1/4 | | |
| **92-137** | 18-3/8 | 5/8 | | | 2.5 | 0.203 | 5/16 | 1-1/4 | | |
| **92-163** | 18-3/8 | 5/8 | | | 2.5 | 0.203 | 5/16 | 3/4 | | |
| **96-129** | 18-3/8 | 1/2 | | | 2.5 | 0.203 | 5/16 | 3/4 | | G3™ |
| **596-818** | 18-7/16 | 5/8 | | | 3 | 0.203 | 5/16 | 1 | | G5™ |
| **92-157** | 18-7/16 | 5/8 | | | 2.5 | 0.203 | 5/16 | 1-1/8 | | |
| **195-072** | 18-7/16 | 5 pt. star | 5/16 | 3-15/16 | 2.75 | 0.187 | 1/2 | 1-3/16 | | |
| **595-605** | 18-7/16 | 5 pt. star | | | 3 | 0.164 | 1/2 | 1 | | G5™ |
| **95-082** | 18-7/16 | 5 pt. star | | | 2.5 | 0.187 | 5/16 | 13/16 | | |
| **95-605** | 18-7/16 | 5 pt. star | | | 2.5 | 0.187 | 1/2 | 3/4 | | G3™ |
| **392-208** | 18-1/2 | 5/8 | | | 3 | 0.250 | 0 | 1 | | G6® |
| **398-672** | 18-1/2 | 5/8 6 pt. star | | | 3 | 0.250 | 1/2 | 1 | | G6® |
| **596-333** | 18-1/2 | 3/4 | | | 3 | 0.203 | 1/2 | 1 | | G5™ |
| **596-808** | 18-1/2 | 5/8 | | | 3 | 0.203 | 0 | 1 | | G5™ |
| **598-672** | 18-1/2 | 5/8 6 pt. star | | | 3 | 0.203 | 1/2 | 1 | | G5™ |
| **599-133** | 18-1/2 | 3/4 | | | 3 | 0.203 | 0 | 1 | | G5™ |
| **91-440** | 18-1/2 | 3/4 | | | 3 | 0.203 | 1/2 | 1-1/4 | | |
| **91-713** | 18-1/2 | 3/4 | 3/8 | 2-9/16 | 2 | 0.187 | 0 | 3/4 | | |
| **91-714** | 18-1/2 | 3/4 | 3/8 | 2-9/16 | 2.5 | 0.164 | 0 | 1-5/16 | | |
| **92-042** | 18-1/2 | 5/8 | | | 2.5 | 0.203 | 0 | 1-1/16 | | |
| **92-208** | 18-1/2 | 5/8 | | | 2.5 | 0.203 | 0 | 13/16 | | |
| **92-738** | 18-1/2 | 5/8 | | | 2.5 | 0.203 | 0 | 1 | | |
| **96-133** | 18-1/2 | 3/4 | | | 2.5 | 0.203 | 0 | 3/4 | | G3™ |
| **96-333** | 18-1/2 | 3/4 | | | 2.5 | 0.203 | 1/2 | 3/4 | | G3™ |
| **98-072** | 18-1/2 | 5/8 6 pt. star | | | 3 | 0.203 | 1/2 | 1-1/4 | | |
| **98-672** | 18-1/2 | 5/8 6 pt. star | | | 2.5 | 0.203 | 1/2 | 1 | | G3™ |
| **99-133** | 18-1/2 | 3/4 | | | 2.5 | 0.203 | 0 | 1-1/8 | | |
| **396-748** | 18-5/8 | 11/16 | | | 3 | 0.250 | 1/2 | 1 | | G6® |
| **396-796** | 18-5/8 | 1-1/8 | | | 3 | 0.250 | 1/2 | 1 | | G6® |
| **396-811** | 18-5/8 | 1-1/8 | | | 3 | 0.250 | 5/8 | 1 | | G6® |
| **396-812** | 18-5/8 | 7/8 | | | 3 | 0.250 | 5/8 | 1 | | G6® |
| **592-617** | 18-5/8 | 7 pt. star | | | 3 | 0.164 | 3/8 | 1 | | G5™ |
| **596-812** | 18-5/8 | 7/8 | | | 3 | 0.203 | 5/8 | 1 | | G5™ |
| **91-404** | 18-5/8 | 13/16 | | | 2.5 | 0.203 | 5/16 | 7/8 | | |
| **91-436** | 18-5/8 | 1-1/8 | | | 2.5 | 0.250 | 1/2 | 1-1/16 | | |
| **92-048** | 18-5/8 | 11/16 | | | 2.5 | 0.250 | 1/2 | 1-1/8 | | |
| **92-103** | 18-5/8 | 7 pt. star | | | 2.75 | 0.187 | 1/4 | 1-1/8 | | |
| **92-125** | 18-5/8 | 1-1/8 | | | 2.5 | 0.250 | 5/8 | 1-1/8 | | |

| OREGON | Length | Center Hole | Outer Hole | Center to Center | Width | Thickness | Offset | Air Lift | L-Cut | Type |
|---|---|---|---|---|---|---|---|---|---|---|
| **92-127** | 18-5/8 | 7/8 | | | 2.5 | 0.250 | 9/16 | 1-1/8 | | |
| **92-132** | 18-5/8 | 1-1/8 | | | 2.5 | 0.250 | 5/8 | 13/16 | | |
| **92-617** | 18-5/8 | 7 pt. star | | | 2.5 | 0.187 | 3/8 | 3/4 | | G3™ |
| **96-748** | 18-5/8 | 11/16 | | | 2.5 | 0.203 | 1/2 | 3/4 | | G3™ |
| **98-151** | 18-5/8 | 5/8 5 pt. star | | | 2.500 | 0.164 | 9-16 | 1-3/16 | | |
| **396-706** | 18-11/16 | 13/16 | | | 3 | 0.250 | 3/8 | 1 | | G6® |
| **596-306** | 18-11/16 | 13/16 | | | 3 | 0.203 | 3/8 | 1 | | G5™ |
| **91-380** | 18-11/16 | 13/16 | | | 2.5 | 0.203 | 3/8 | 1-1/8 | | |
| **91-384** | 18-11/16 | 13/16 | | | 2.5 | 0.203 | 3/8 | 3/4 | | |
| **96-306** | 18-11/16 | 13/16 | | | 2.5 | 0.203 | 3/8 | 1 | | G3™ |
| **396-803** | 18-3/4 | 5/8 | | | 3 | 0.250 | 5/16 | 1 | | G6® |
| **69-243-0** | 18-3/4 | 1 | 3/8 x 1/2 | 1-7/16 | 2.5 | 0.149 | 0 | 1 | | G3™ |
| **69-254-0** | 18-3/4 | 1 | 3/8 x 1/2 | 1-7/16 | 2.25 | 0.149 | 5/8 | 5/8 | | |
| **69-259-0** | 18-3/4 | 1 | 3/8 x 1/2 | 1-7/16 | 2.25 | 0.149 | 0 | 5/8 | | |
| **69-264-0** | 18-3/4 | 1 | 3/8 x 1/2 | 1-7/16 | 2.5 | 0.149 | 5/8 | 1 | | G3™ |
| **90-143** | 18-3/4 | 3/8 | 3/8 x 1-3/8 | 2-1/2 | 2.25 | 0.149 | 1/8 | 5/8 | | |
| **91-093** | 18-3/4 | 3/8 | 3/8 | 2-3/4 | 2 | 0.187 | 0 | 1 | | |
| **94-060** | 18-3/4 | 5/8 | | | 2.25 | 0.164 | 5/16 | 1-1/8 | | G3™ |
| **94-070** | 18-3/4 | 5/8 | | | 2.25 | 0.164 | 5/16 | 7/8 | | |
| **96-803** | 18-3/4 | 5/8 | | | 2.25 | 0.164 | 5/16 | 3/4 | | G3™ |
| **90-619** | 18-7/8 | 3/8 | 3/8 x 1-3/8 | 2-1/2 | 2.25 | 0.149 | 1/4 | 5/8 | | |
| **98-019** | 18-7/8 | 3/8 | 5/16 | 2-1/2 | 2 | 0.134 | 5/16 | 7/8 | | |
| **396-719** | 18-15/16 | 13/16 | | | 3 | 0.250 | 1/2 | 1 | | G6® |
| **596-719** | 18-15/16 | 13/16 | | | 3 | 0.203 | 1/2 | 1 | | G5™ |
| **90-354** | 18-15/16 | 13/16 | | | 2.75 | 0.250 | 1/2 | 1-3/8 | | |
| **95-095** | 19 | 5/8 | | | 2.500 | 0.250 | 0 | 1-1/4 | | G3™ |
| **396-769** | 19 | 7/8 | | | 3 | 0.250 | 7/16 | 1 | | G6® |
| **596-351** | 19 | 3/4 | | | 3 | 0.203 | 5/8 | 1 | | G5™ |
| **596-769** | 19 | 7/8 | | | 3 | 0.203 | 7/16 | 1 | | G5™ |
| **91-138** | 19 | 7/8 | | | 2.5 | 0.250 | 7/16 | 1-1/16 | | |
| **92-118** | 19 | 7/8 | | | 3 | 0.250 | 7/16 | 1-5/16 | | |
| **92-140** | 19 | bow-tie | 5/16 | 2-1/2 | 2.25 | 0.134 | 1/4 | 1-1/8 | | |
| **92-149** | 19 | 1/2 | | | 2.5 | 0.250 | 0 | 1-1/4 | | |
| **92-607** | 19 | 9/16 | | | 2.5 | 0.203 | 0 | 3/4 | | G3™ |
| **94-043** | 19 | 1/2 | | | 2.5 | 0.250 | 3/16 | 7/8 | | |
| **95-092** | 19 | 5/8 | | | 2.5 | 0.250 | 0 | 1 | | |
| **96-351** | 19 | 3/4 | | | 3 | 0.203 | 9/16 | 1 | | G3™ |
| **96-364** | 19 | 7/8 | | | 2.5 | 0.203 | 7/16 | 3/4 | | G3™ |
| **96-701** | 19 | 1/2 | | | 2.5 | 0.250 | 3/16 | 1 | | G3™ |
| **98-091** | 19 | 3/4 | | | 3 | 0.203 | 7/16 | 1-5/16 | | |
| **396-800** | 19-3/16 | 7/16 | 3/8 | 1-9/16 | 3 | 0.250 | 0 | 1 | | G6® |
| **595-601** | 19-1/4 | 5 pt. star | | | 3 | 0.164 | 0 | 1 | | G5™ |
| **94-032** | 19-1/4 | 5/8 | | | 2.5 | 0.187 | 9/16 | 3/4 | | |
| **94-602** | 19-1/4 | 5/8 | | | 2.5 | 0.203 | 9/16 | 3/4 | | G3™ |
| **95-031** | 19-1/4 | 3/8 | | | 2.25 | 0.187 | 0 | 1 | | |
| **95-033** | 19-1/4 | 5 pt. star | | | 2.25 | 0.134 | 1/8 | 1 | | |
| **95-038** | 19-1/4 | 5 pt. star | | | 2.25 | 0.187 | 1/8 | 1-1/16 | | |
| **95-047** | 19-1/4 | 5 pt. star | | | 2.25 | 0.187 | 0 | 1 | | |
| **95-601** | 19-1/4 | 5 pt. star | | | 2.5 | 0.187 | 0 | 3/4 | | G3™ |
| **195-003** | 19-5/16 | 5 pt. star | 5/16 | 3-1/8 | 2.25 | 0.134 | 1/8 | 7/8 | | |
| **195-033** | 19-5/16 | 5 pt. star | 3/8 | 3-1/8 | 2.25 | 0.134 | 1/8 | 1-1/16 | | |
| **198-058** | 19-5/16 | 5/8 6 pt. star | | | 2.75 | 0.149 | 3/8 | 1-1/2 | | |
| **598-628** | 19-5/16 | 5/8 6 pt. star | | | 3 | 0.164 | 5/16 | 1 | | G5™ |
| **94-038** | 19-5/16 | 5/8 | | | 2.5 | 0.187 | 9/16 | 1-1/4 | | |
| **98-044** | 19-5/16 | 3/8 | 5/16 | 2-1/2 | 3 | 0.149 | 5/16 | 1-3/8 | | |
| **98-537** | 19-5/16 | 3/8 | 7/16 | 2-1/2 | 3 | 0.149 | 5/16 | 1 | | |
| **98-628** | 19-5/16 | 5/8 6 pt. star | | | 2.5 | 0.187 | 5/16 | 3/4 | | G3™ |
| **98-105** | 19-3/8 | 5/8 | 5/16 | 2-1/2 | 2.750 | 0.138 | 7/16 | 1-1/8 | 5/16 | |

# Blades by Length

| OREGON® | Length | Center Hole | Outer Hole | Center to Center | Width | Thickness | Offset | Air Lift | L-Cut | Type |
|---|---|---|---|---|---|---|---|---|---|---|
| **198-052** | 19-3/8 | 5/8 6 pt. star | | | 3 | 0.149 | 5/16 | 1-1/4 | | |
| **91-057** | 19-3/8 | 3/4 | 5/16 | 2-1/2 | 2.75 | 0.187 | 5/16 | 1-1/2 | | |
| **91-328** | 19-3/8 | 3/4 | | | 3 | 0.203 | 5/16 | 1-5/16 | | |
| **91-329** | 19-3/8 | 3/4 | | | 3 | 0.203 | 5/16 | 7/8 | | |
| **95-015** | 19-3/8 | 3/8 | | | 2.25 | 0.187 | 0 | 1 | | |
| **95-099** | 19-3/8 | 5 pt. star | | | 2.25 | 0.149 | 1/8 | 1 | | |
| **96-697** | 19-3/8 | 3/4 | | | 3 | 0.203 | 5/16 | 3/4 | | G3™ |
| **98-493** | 19-3/8 | 3/8 | 5/16 | 2-1/2 | 3 | 0.149 | 5/16 | 1-3/16 | | |
| **396-352** | 19-7/16 | 7 pt. Star | | | 3 | 0.250 | 7/16 | 1 | | G6® |
| **597-602** | 19-7/16 | 13/16 | | | 3 | 0.164 | 3/8 | 1 | | G5™ |
| **92-109** | 19-7/16 | 7 pt. star | | | 3 | 0.203 | 7/16 | 1-3/4 | | |
| **97-010** | 19-7/16 | 13/16 | | | 2.25 | 0.120 | 3/8 | 1 | | |
| **97-021** | 19-7/16 | 13/16 | | | 2.25 | 0.134 | 5/16 | 1 | | |
| **97-107** | 19-7/16 | 13/16 | | | 2.25 | 0.134 | 5/8 | 1-1/8 | | |
| **97-118** | 19-7/16 | 13/16 | | | 2.25 | 0.187 | 5/8 | 1-3/16 | | |
| **99-614** | 19-7/16 | 1 | | | 2.5 | 0.203 | 3/16 | 3/4 | | G3™ |
| **92-913** | 19-1/2 | 15/16 | | | 3.000 | 0.203 | 3/8 | 1 | | |
| **191-392** | 19-1/2 | 11/16 | 3/8 | 4 | 2.53 | 0.203 | 7/16 | 5/8 | | |
| **396-709** | 19-1/2 | 11/16 | | | 3 | 0.250 | 7/16 | 1 | | G6® |
| **596-309** | 19-1/2 | 11/16 | | | 3 | 0.203 | 7/16 | 1 | | G5™ |
| **91-398** | 19-1/2 | 11/16 | | | 3 | 0.203 | 7/16 | 1-3/4 | | |
| **91-400** | 19-1/2 | 11/16 | | | 3 | 0.203 | 7/16 | 1-1/2 | | |
| **91-403** | 19-1/2 | 11/16 | | | 2.5 | 0.203 | 3/8 | 1-3/16 | | |
| **96-309** | 19-1/2 | 11/16 | | | 2.5 | 0.203 | 7/16 | 3/4 | | G3™ |
| **97-003** | 19-1/2 | 13/16 | | | 2.75 | 0.134 | 1/2 | 15/16 | | |
| **97-016** | 19-5/8 | 3/8 | | | 2.25 | 0.134 | 3/8 | 11/16 | | |
| **96-005** | 19-11/16 | 3/8 | | | 2 | 0.134 | 1/8 | 1/2 | | |
| **69-244-0** | 19-3/4 | 1 | 3/8 x 1/2 | 1-7/16 | 2.5 | 0.149 | 0 | 1 | | G3™ |
| **69-255-0** | 19-3/4 | 1 | 3/8 x 1/2 | 1-7/16 | 2.25 | 0.149 | 5/8 | 5/8 | | |
| **69-260-0** | 19-3/4 | 1 | 3/8 x 1/2 | 1-7/16 | 2.25 | 0.149 | 0 | 5/8 | | |
| **69-265-0** | 19-3/4 | 1 | 3/8 x 1/2 | 1-7/16 | 2.5 | 0.149 | 5/8 | 1 | | G3™ |
| **90-144** | 19-3/4 | 3/8 | 3/8 x 1-3/8 | 2-1/2 | 2.25 | 0.149 | 1/8 | 5/8 | | |
| **96-809** | 19-3/4 | 7/16 | 3/8 | 2-1/2 | 2.25 | 0.134 | 7/16 | 3/4 | | G3™ |
| **90-620** | 19-7/8 | 3/8 | 3/8 x 1-3/8 | 2-1/2 | 2.25 | 0.149 | 1/4 | 5/8 | | |
| **97-022** | 19-7/8 | 3/8 | | | 2.25 | 0.134 | 3/8 | 7/8 | | |
| **595-024** | 19-15/16 | 5/8 | 3/8 | 1-7/8 | 3 | 0.134 | 5/8 | 1 | | G5™ |
| **95-024** | 19-15/16 | 5/8 | 3/8 | 1-7/8 | 2.5 | 0.149 | 9/16 | 7/8 | | |
| **95-041** | 19-15/16 | 5/8 | 3/8 | 1-7/8 | 2.5 | 0.149 | 7/16 | 15/16 | | |
| **91-911** | 20 | 5/8 | 3/16 | 3 | 2.75 | 0.203 | 1-1/16 | 3/4 | | |
| **94-029** | 20 | 5/8 | | | 2.5 | 0.250 | 3/16 | 1 | | |
| **94-620** | 20 | 5/8 | | | 2.5 | 0.203 | 3/16 | 3/4 | | G3™ |
| **95-044** | 20 | 5/8 | 3/8 | 1-7/8 | 2 | 0.134 | 5/16 | 13/16 | | |
| **95-051** | 20 | 5/8 | 3/8 | 1-7/8 | 2.25 | 0.134 | 7/16 | 11/16 | | |
| **96-802** | 20 | 1/2 | | | 2.5 | 0.250 | 1/2 | 3/4 | | G3™ |
| **98-001** | 20 | 13/16 | 3/8 | 2-1/2 | 2.25 | 0.134 | 5/16 | 7/8 | | |
| **98-066** | 20 | bow-tie | 5/16 | 2-1/2 | 2.25 | 0.134 | 5/16 | 1-1/8 | | |
| **98-068** | 20 | bow-tie | 5/16 | 2-1/2 | 2.25 | 0.134 | 5/16 | 13/16 | | |
| **91-452** | 20-1/16 | 1/2 | | | 2 | 0.250 | 1/2 | 7/8 | L | |
| **392-301** | 20-3/16 | 3/4 | | | 3 | 0.250 | 5/8 | 1 | | G6® |
| **91-046** | 20-3/16 | 1/2 | | | 2.5 | 0.250 | 1/2 | 15/16 | L | |
| **91-761** | 20-3/16 | 5/8 | | | 2 | 0.203 | 13/16 | 3/4 | L | |
| **91-762** | 20-3/16 | 5/8 | | | 2 | 0.203 | 13/16 | 11/16 | | |
| **92-301** | 20-3/16 | 3/4 | | | 2.5 | 0.250 | 11/16 | 1-1/8 | | |
| **591-259** | 20-1/4 | 5/8 | | | 3 | 0.164 | 0 | 1 | | G5™ |
| **91-141** | 20-1/4 | 3/4 | | | 2 | 0.250 | 5/8 | 15/16 | | |
| **91-259** | 20-1/4 | 5/8 | | | 2.5 | 0.203 | 0 | 1 | | |
| **96-605** | 20-1/4 | 3/4 | | | 2.5 | 0.203 | 5/8 | 3/4 | | G3™ |
| **97-004** | 20-5/16 | 7/8 | | | 2.75 | 0.134 | 1/2 | 7/8 | | |

| OREGON® | Length | Center Hole | Outer Hole | Center to Center | Width | Thickness | Offset | Air Lift | L-Cut | Type |
|---|---|---|---|---|---|---|---|---|---|---|
| **97-006** | 20-5/16 | 13/16 | | | 2.25 | 0.134 | 3/8 | 1 | | |
| **97-024** | 20-5/16 | 13/16 | | | 2.25 | 0.134 | 5/16 | 1 | | |
| **92-121** | 20-3/8 | 11/16 | | | 2.5 | 0.250 | 5/8 | 1-1/8 | | |
| **92-122** | 20-3/8 | 11/16 | | | 2.5 | 0.250 | 9/16 | 1-1/8 | | |
| **97-109** | 20-3/8 | 13/16 | | | 2.25 | 0.134 | 7/16 | 1-1/16 | | |
| **97-119** | 20-3/8 | 13/16 | | | 2.25 | 0.187 | 7/16 | 1-1/8 | | |
| **97-604** | 20-3/8 | 13/16 | | | 2.5 | 0.187 | 7/16 | 3/4 | | G3™ |
| **91-391** | 20-7/16 | 3/4 | | | 2 | 0.203 | 0 | 1 | | |
| **191-015** | 20-7/16 | 3/4 | | | 2.5 | 0.187 | 1/2 | 15/16 | | |
| **94-126** | 20-1/2 | 5/8 | | | 2.500 | 0.250 | 0 | 1 | | |
| **94-130** | 20-1/2 | 5/8 | | | 2.500 | 0.250 | 0 | 1-1/8 | | |
| **94-133** | 20-1/2 | 5/8 | | | 2.500 | 0.250 | 0 | 11/16 | | |
| **94-138** | 20-1/2 | 4/8 | | | 2.500 | 0.250 | 0 | 1 | | |
| **91-255** | 20-1/2 | 5/8 | | | 2.000 | 0.250 | 0 | 5/8 | | |
| **92-126** | 20-1/2 | 5/8 | | | 3.000 | 0.203 | 0 | 1-1/2 | | |
| **391-574** | 20-1/2 | 3/8 | 3/8 | 3 | 3 | 0.250 | 1/2 | 1 | | G6® |
| **392-025** | 20-1/2 | 15/16 | | | 3 | 0.250 | 0 | 1 | | G6® |
| **396-612** | 20-1/2 | 7/8 | | | 3 | 0.250 | 5/8 | 1 | | G6® |
| **396-734** | 20-1/2 | 7/8 | | | 3 | 0.250 | 0 | 1 | | G6® |
| **396-739** | 20-1/2 | 1/2 | | | 3 | 0.250 | 0 | 1 | | G6® |
| **396-740** | 20-1/2 | 5/8 | | | 3 | 0.250 | 0 | 1 | | G6® |
| **396-807** | 20-1/2 | 5/8 | | | 3 | 0.250 | 5/16 | 1 | | G6® |
| **396-810** | 20-1/2 | 1-1/8 | | | 3 | 0.250 | 5/8 | 1 | | G6® |
| **596-319** | 20-1/2 | 5/8 | | | 3 | 0.203 | 0 | 1 | | G5™ |
| **596-734** | 20-1/2 | 7/8 | | | 3 | 0.203 | 0 | 1 | | G5™ |
| **596-749** | 20-1/2 | 15/16 | | | 3 | 0.203 | 0 | 1 | | G5™ |
| **596-810** | 20-1/2 | 1-1/8 | | | 3 | 0.203 | 5/8 | 1 | | G5™ |
| **596-815** | 20-1/2 | 5/8 | | | 3 | 0.203 | 5/16 | 1 | | G5™ |
| **90-109** | 20-1/2 | 5/8 | | | 3 | 0.250 | 0 | 1-3/16 | | |
| **91-050** | 20-1/2 | 3/8 | 3/8 | 3 | 2.25 | 0.187 | 1/2 | 13/16 | | |
| **91-144** | 20-1/2 | 3/4 | | | 3 | 0.203 | 1/2 | 1-5/16 | | |
| **91-188** | 20-1/2 | 1/2 | | | 2.5 | 0.203 | 0 | 1 | | |
| **91-217** | 20-1/2 | 1/2 | | | 2.5 | 0.203 | 0 | 1 | | |
| **91-239** | 20-1/2 | 5/8 | | | 2.5 | 0.250 | 3/4 | 1-1/16 | | |
| **91-253** | 20-1/2 | 5/8 | | | 2.5 | 0.250 | 0 | 1-1/8 | | |
| **91-264** | 20-1/2 | 5/8 | | | 2.5 | 0.203 | 0 | 1 | | |
| **91-311** | 20-1/2 | 5/8 | | | 2.5 | 0.203 | 0 | 1 | | |
| **91-378** | 20-1/2 | 5/8 | | | 2.5 | 0.203 | 0 | 5/8 | | |
| **91-394** | 20-1/2 | 7/8 | | | 2.5 | 0.312 | 0 | 1 | | |
| **91-503** | 20-1/2 | 5/8 | | | 2.5 | 0.203 | 0 | 1-3/16 | | |
| **91-506** | 20-1/2 | 5/8 | | | 2.5 | 0.250 | 0 | 1-3/16 | | |
| **91-509** | 20-1/2 | 5/8 | | | 2.5 | 0.250 | 0 | 1-1/8 | | |
| **91-527** | 20-1/2 | 5/8 | | | 2.5 | 0.250 | 5/16 | 1-3/16 | | |
| **91-574** | 20-1/2 | 3/8 | 3/8 | 3 | 2.5 | 0.187 | 1/2 | 3/4 | | G3™ |
| **91-732** | 20-1/2 | 3/4 X 5/8 | | | 2.25 | 0.187 | 0 | 7/8 | | |
| **92-025** | 20-1/2 | 15/16 | | | 2.5 | 0.203 | 0 | 1 | | |
| **92-028** | 20-1/2 | 15/16 | | | 3 | 0.203 | 0 | 1-5/16 | | |
| **92-031** | 20-1/2 | 15/16 | | | 2.5 | 0.203 | 0 | 1 | | |
| **92-037** | 20-1/2 | 5/8 | | | 2.5 | 0.203 | 0 | 1-1/16 | | |
| **92-038** | 20-1/2 | 5/8 | | | 2.5 | 0.203 | 0 | 13/16 | | |
| **92-082** | 20-1/2 | 15/16 | | | 2.5 | 0.203 | 0 | 1 | | |
| **92-128** | 20-1/2 | 1-1/8 | | | 2.5 | 0.250 | 5/8 | 1-1/8 | | |
| **92-130** | 20-1/2 | 1-1/8 | | | 2.5 | 0.250 | 5/8 | 13/16 | | |
| **92-159** | 20-1/2 | 5/8 | | | 2.5 | 0.250 | 5/16 | 1-1/8 | | |
| **92-209** | 20-1/2 | 15/16 | | | 3 | 0.203 | 0 | 1-5/16 | | |
| **92-213** | 20-1/2 | 5/8 | | | 2.25 | 0.187 | 1/16 | 15/16 | | |
| **94-055** | 20-1/2 | 5/8 | | | 2.5 | 0.250 | 0 | 1 | | |
| **94-072** | 20-1/2 | 1/2 | | | 2.5 | 0.250 | 0 | 3/4 | | |

# Blades by Length

| OREGON | Length | Center Hole | Outer Hole | Center to Center | Width | Thickness | Offset | Air Lift | L-Cut | Type |
|---|---|---|---|---|---|---|---|---|---|---|
| **96-319** | 20-1/2 | 5/8 | | | 2.5 | 0.203 | 0 | 3/4 | | G3™ |
| **96-363** | 20-1/2 | 1-1/8 | | | 2.5 | 0.203 | 9/16 | 3/4 | | G3™ |
| **96-612** | 20-1/2 | 7/8 | | | 2.5 | 0.203 | 5/8 | 3/4 | | G3™ |
| **96-677** | 20-1/2 | 3/4 | | | 3 | 0.203 | 1/2 | 1 | | G3™ |
| **96-749** | 20-1/2 | 15/16 | | | 2.5 | 0.203 | 0 | 1 | | G3™ |
| **96-801** | 20-1/2 | 1/2 | | | 2.5 | 0.250 | 0 | 1 | | G3™ |
| **96-810** | 20-1/2 | 7/16 | 3/8 | 2.5 | 2.25 | 0.134 | 7/16 | 3/4 | | G3™ |
| **396-787** | 20-9/16 | 1-1/8 | | | 3 | 0.250 | 1/2 | 1 | | G6® |
| **396-816** | 20-9/16 | 1-5/16 | | | 3 | 0.250 | 5/8 | 1 | | G6® |
| **596-787** | 20-9/16 | 1-1/8 | | | 3 | 0.203 | 1/2 | 1 | | G5™ |
| **91-005** | 20-9/16 | 3/8 | | | 2.75 | 0.134 | 5/16 | 1 | | |
| **91-438** | 20-9/16 | 1-1/8 | | | 2.5 | 0.250 | 1/2 | 1-1/8 | | |
| **91-616** | 20-9/16 | 1 | 3/8 | 2-9/16 | 2.5 | 0.203 | 0 | 1-1/4 | | |
| **92-049** | 20-9/16 | 1-1/8 | | | 2.5 | 0.250 | 9/16 | 1-1/8 | | |
| **92-115** | 20-9/16 | 7/8 | | | 2.5 | 0.250 | 5/8 | 3/4 | | |
| **92-123** | 20-9/16 | 7/8 | | | 2.5 | 0.250 | 7/16 | 13/16 | | |
| **96-041** | 20-9/16 | 3/8 | | | 2.75 | 0.134 | 1/4 | 3/4 | | G3™ |
| **96-398** | 20-9/16 | 1 | 3/8 | 2-9/16 | 2.5 | 0.203 | 0 | 1 | | G3™ |
| **96-787** | 20-9/16 | 1-1/8 | | | 2.5 | 0.203 | 1/2 | 3/4 | | G3™ |
| **392-201** | 20-11/16 | 15/16 | | | 3 | 0.250 | 3/8 | 1 | | G6® |
| **492-730** | 20-11/16 | 15/16 | | | 3 | 0.203 | 3/8 | 1-1/16 | | |
| **91-417** | 20-11/16 | 3/4 | 9/16 | 3-9/16 | 2.25 | 0.149 | 1/2 | 11/16 | | |
| **96-620** | 20-11/16 | 3/8 | 3/8 | 2-3/4 | 2.75 | 0.164 | 3/16 | 3/4 | | G3™ |
| **99-103** | 20-11/16 | 3/8 | 3/8 | 2-3/4 | 2.75 | 0.164 | 3/16 | 1 | | |
| **99-107** | 20-11/16 | 3/8 | 3/8 | 2-3/4 | 2.75 | 0.164 | 3/16 | 1 | | |
| **99-119** | 20-11/16 | 3/8 | | | 2.5 | 0.149 | 3/8 | 1-1/8 | | |
| **99-121** | 20-11/16 | 3/8 | 3/8 | 2-3/4 | 2.75 | 0.164 | 3/16 | 1-1/4 | | |
| **92-915** | 20-3/4 | 15/16 | | | 3.000 | 0.203 | 3/8 | 1 | | G3™ |
| **92-920** | 20-3/4 | 15/16 | | | 3.000 | 0.203 | 3/8 | 1-1/8 | | |
| **69-245-0** | 20-3/4 | 1 | 3/8 x 1/2 | 1-7/16 | 2.5 | 0.149 | 0 | 1 | | G3™ |
| **69-256-0** | 20-3/4 | 1 | 3/8 x 1/2 | 1-7/16 | 2.25 | 0.149 | 5/8 | 5/8 | | |
| **69-261-0** | 20-3/4 | 1 | 3/8 x 1/2 | 1-7/16 | 2.25 | 0.149 | 0 | 5/8 | | |
| **69-266-0** | 20-3/4 | 1 | 3/8 x 1/2 | 1-7/16 | 2.5 | 0.149 | 5/8 | 1 | | G3™ |
| **90-145** | 20-3/4 | 3/8 | 3/8 x 1-3/8 | 2-1/2 | 2.25 | 0.149 | 1/8 | 5/8 | | |
| **96-811** | 20-3/4 | 3/8 | 7/16 | 1-15/16 | 2.75 | 0.134 | 3/8 | 3/4 | | G3™ |
| **392-013** | 20-13/16 | 1/2 | | | 3 | 0.250 | 0 | 1 | | G6® |
| **90-651** | 20-13/16 | 13/16 | 3/8 | 3-7/16 | 2.25 | 0.187 | 0 | 3/4 | | G3™ |
| **91-291** | 20-13/16 | 13/16 | 3/8 | 3-7/16 | 2.25 | 0.149 | 0 | 5/8 | | |
| **91-444** | 20-13/16 | 13/16 | 3/8 | 3-7/16 | 2.25 | 0.149 | 3/16 | 1-1/16 | | |
| **92-013** | 20-13/16 | 1/2 | | | 2.5 | 0.250 | 0 | 1 | | |
| **94-051** | 20-13/16 | 7/16 | 3/8 | 2-1/2 | 2.25 | 0.149 | 7/16 | 7/8 | | |
| **396-730** | 20-7/8 | 7/8 | | | 3 | 0.250 | 1/2 | 1 | | G6® |
| **596-730** | 20-7/8 | 7/8 | | | 3 | 0.203 | 1/2 | 1 | | G5™ |
| **90-621** | 20-7/8 | 3/8 | 3/8 x 1-3/8 | 2-1/2 | 2.25 | 0.149 | 1/4 | 5/8 | | |
| **91-078** | 20-7/8 | 7/8 | | | 2.5 | 0.312 | 7/16 | 7/8 | | |
| **91-443** | 20-7/8 | 7/8 | 3/8 | 3-11/16 | 2.75 | 0.134 | 3/8 | 1 | | |
| **91-516** | 20-7/8 | 13/16 | 3/8 | 3-7/16 | 2.25 | 0.120 | 1 | 11/16 | | |
| **91-587** | 20-7/8 | 7/8 | | | 2.5 | 0.250 | 3/8 | 1 | | |
| **92-102** | 20-7/8 | 1-1/4 | 9/16 | 3-1/2 | 2.75 | 0.134 | 9/16 | 0 | | |
| **92-113** | 20-7/8 | 7/8 | | | 3 | 0.250 | 1/2 | 1-1/4 | | |
| **96-660** | 20-7/8 | 7/16 | 3/8 | 2-1/2 | 2.25 | 0.134 | 7/16 | 1 | | G3™ |
| **97-110** | 20-7/8 | 3/8 | 5/16 x 1/2 | 2-5/16 | 2.25 | 0.149 | 3/8 | 3/4 | | |
| **91-080** | 20-15/16 | 15/16 | | | 2.750 | 0.203 | 9/16 | 1-7/16 | | |
| **392-138** | 20-15/16 | 5/8 | | | 3 | 0.250 | 5/16 | 1 | | G6® |
| **396-703** | 20-15/16 | 5/8 | | | 3 | 0.250 | 5/8 | 1 | | G6® |
| **596-627** | 20-15/16 | 1 | | | 3 | 0.203 | 3/4 | 1 | | G5™ |
| **90-208** | 20-15/16 | 5/8 | | | 3 | 0.250 | 5/8 | 1 | | |
| **91-127** | 20-15/16 | 1/2 | | | 2.5 | 0.203 | 5/16 | 3/4 | | |

| OREGON® | Length | Center Hole | Outer Hole | Center to Center | Width | Thickness | Offset | Air Lift | L-Cut | Type |
|---|---|---|---|---|---|---|---|---|---|---|
| **91-128** | 20-15/16 | 1/2 | | | 2.5 | 0.203 | 5/16 | 1-1/4 | | |
| **91-457** | 20-15/16 | 1 | | | 2.5 | 0.203 | 3/4 | 1-3/16 | | |
| **91-584** | 20-15/16 | 1 | 1/2 | 5 | 2.5 | 0.250 | 7/16 | 1 | | |
| **92-011** | 20-15/16 | 5/8 | 1/2 | 2-9/16 | 3 | 0.120 | 11/16 | 7/8 | | |
| **92-138** | 20-15/16 | 5/8 | | | 2.5 | 0.203 | 5/16 | 1-1/4 | | |
| **92-172** | 20-15/16 | 1 | | | 2.5 | 0.250 | 3/4 | 15/16 | | |
| **92-173** | 20-15/16 | 1 | | | 2.5 | 0.312 | 11/16 | 11/16 | | |
| **94-127** | 20-15/16 | 7/16 | 3/8 | 2-7/16 | 2.25 | 0.134 | 5/16 | 7/8 | | |
| **94-770** | 20-15/16 | 7/16 | 3/8 | 2-7/16 | 2.25 | 0.134 | 3/8 | 7/8 | | |
| **96-600** | 20-15/16 | 7/16 | 3/8 | 2-7/16 | 2.25 | 0.134 | 5/16 | 3/4 | | G3™ |
| **98-002** | 20-15/16 | 13/16 | 3/8 | 2-1/2 | 2.25 | 0.134 | 1/4 | 13/16 | | |
| **98-007** | 20-15/16 | 13/16 | 3/8 | 2-1/2 | 2.25 | 0.134 | 5/16 | 15/16 | | |
| **98-102** | 20-15/16 | 13/16 | 3/8 | 2-1/2 | 2.5 | 0.134 | 5/16 | 3/4 | | G3™ |
| **99-615** | 20-15/16 | 1/2 | | | 2.5 | 0.203 | 5/16 | 3/4 | | G3™ |
| **92-166** | 20-15/16 | 5/8 | | | 2.500 | 0.203 | 5/16 | 1 | | |
| **92-181** | 20-15/16 | 5/8 | | | 2.500 | 0.203 | 5/16 | 1 | | |
| **95-096** | 21 | 5/8 | | | 3.000 | 0.250 | 0 | 1-1/2 | | |
| **91-518** | 21 | 7/8 | 7/16 | 3-1/16 | 4.750 | 0.120 | 1 | 7/8 | 7/16 | |
| **91-519** | 21 | 1-1/4 | 3/8 | 3-1/2 | 2.500 | 0.120 | 1/2 | 0 | 3/8 | |
| **95-083** | 21 | 5/8 | 3/8 | 1-7/8 | 2.250 | 0.149 | 9/16 | 1-5/16 | 3/8 | |
| **95-089** | 21 | 5/8 | 3/8 | 1-7/8 | 2.250 | 0.134 | 9/16 | 1-5/16 | 3/8 | |
| **95-093** | 21 | 5/8 5 pt. star | 3/8 | 1-7/8 | 2.250 | 0.149 | 7/16 | 1 | 3/8 | |
| **195-005** | 21 | 5 pt. star | 5/16 | 3-1/8 | 2.25 | 0.134 | 1/8 | 7/8 | | |
| **195-019** | 21 | 5 pt. star | 5/16 | 3-1/8 | 2.25 | 0.149 | 1/8 | 15/16 | | |
| **195-032** | 21 | 5 pt. star | 5/16 | 3-1/8 | 2.25 | 0.149 | 1/8 | 1-1/16 | | |
| **195-039** | 21 | 5 pt. star | 5/16 | 3-1/8 | 2.25 | 0.187 | 1/8 | 1-1/18 | | |
| **195-048** | 21 | 5 pt. star | 5/16 | 3-1/8 | 2.25 | 0.187 | 0 | 3/4 | | |
| **195-067** | 21 | 5/8 | 3/8 | 1-7/8 | 2.25 | 0.134 | 9/16 | 1-1/16 | | |
| **198-049** | 21 | bow-tie | 5/16 | 2-1/2 | 2.25 | 0.134 | 1/4 | 15/16 | | |
| **396-629** | 21 | 1/2 | | | 3 | 0.250 | 0 | 1 | | G6® |
| **396-702** | 21 | 5/8 | | | 3 | 0.250 | 1/2 | 1 | | G6® |
| **396-712** | 21 | 1/2 | | | 3 | 0.250 | 5/16 | 1 | | G6® |
| **396-727** | 21 | 5/8 | | | 3 | 0.250 | 0 | 1 | | G6® |
| **592-608** | 21 | 9/16 | | | 3 | 0.203 | 0 | 1 | | G5™ |
| **595-621** | 21 | 5/8 | 3/8 | 1-7/8 | 3 | 0.149 | 1/2 | 1 | | G5™ |
| **595-622** | 21 | 1-1/4 | 3/8 | 3-7/16 | 3 | 0.134 | 1/2 | 1 | | G5™ |
| **595-623** | 21 | 5 pt. star | | | 3 | 0.164 | 3/8 | 1 | | G5™ |
| **596-300** | 21 | 3/4 | | | 3 | 0.203 | 1/2 | 1 | | G5™ |
| **596-346** | 21 | 1/2 | | | 3 | 0.203 | 5/16 | 1 | | G5™ |
| **596-347** | 21 | 5/8 | | | 3 | 0.203 | 0 | 1 | | G5™ |
| **596-629** | 21 | 1/2 | | | 3 | 0.203 | 0 | 1 | | G5™ |
| **596-702** | 21 | 5/8 | | | 3 | 0.203 | 1/2 | 1 | | G5™ |
| **596-900** | 21 | 5 pt. star | | | 3 | 0.164 | 0 | 1 | | G5™ |
| **598-631** | 21 | bow-tie | 5/16 | 2-1/2 | 3 | 0.149 | 5/16 | 1 | | G5™ |
| **91-035** | 21 | 1/2 | | | 2.5 | 0.250 | 1/4 | 1-1/4 | | |
| **91-071** | 21 | 1/2 | | | 2.25 | 0.250 | 0 | 1 | | |
| **91-135** | 21 | 5/8 | | | 2.5 | 0.203 | 1/2 | 1 | | |
| **91-209** | 21 | 5/8 | | | 2.5 | 0.250 | 0 | 1 | | |
| **91-308** | 21 | 5/8 | | | 2.5 | 0.203 | 0 | 1 | | |
| **91-442** | 21 | 1/2 | | | 2 | 0.250 | 7/16 | 1-1/8 | | |
| **91-482** | 21 | 9/16 | | | 2.5 | 0.203 | 0 | 1 | | |
| **91-517** | 21 | 1-1/4 | 7/16 | 3-7/16 | 2.75 | 0.120 | 1/2 | 0 | | |
| **91-531** | 21 | 1/2 | | | 2.5 | 0.250 | 5/16 | 1 | | |
| **91-534** | 21 | 1/2 | | | 2.5 | 0.250 | 5/16 | 1-3/16 | | |
| **91-537** | 21 | 1/2 | | | 3 | 0.250 | 5/16 | 1-1/4 | | |
| **91-539** | 21 | 1/2 | | | 2.5 | 0.203 | 0 | 1 | | |
| **91-547** | 21 | 1/2 | | | 2.5 | 0.250 | 5/16 | 3/4 | | |
| **91-596** | 21 | 5/8 | | | 2.5 | 0.203 | 0 | 1 | | |

# Blades by Length

| OREGON | Length | Center Hole | Outer Hole | Center to Center | Width | Thickness | Offset | Air Lift | L-Cut | Type |
|---|---|---|---|---|---|---|---|---|---|---|
| **91-626** | 21 | 5/8 | | | 2.5 | 0.203 | 0 | 1 | | |
| **91-628** | 21 | 5/8 | | | 3 | 0.203 | 0 | 1-1/2 | | |
| **91-638** | 21 | 5/8 | | | 2.5 | 0.203 | 0 | 1 | | |
| **92-134** | 21 | 1/2 | | | 2.5 | 0.250 | 0 | 1-1/4 | | |
| **93-008** | 21 | 5/8 | 1/4 | 1-5/8 | 2.5 | 0.250 | 0 | 1-3/16 | | |
| **93-011** | 21 | 5/8 | | | 2.5 | 0.250 | 1/2 | 1-1/8 | | |
| **93-013** | 21 | 5/8 | | | 2.5 | 0.250 | 1/2 | 5/8 | | |
| **94-017** | 21 | 7/16 | 3/8 | 2-7/16 | 2.25 | 0.134 | 5/16 | 7/8 | | |
| **94-079** | 21 | 1/2 | | | 2.5 | 0.250 | 1/2 | 15/16 | | |
| **95-057** | 21 | 5/8 | 3/8 | 1-7/8 | 2.75 | 0.134 | 1/2 | 1-9/16 | | |
| **95-071** | 21 | 5/8 | 3/8 | 1-7/8 | 2.75 | 0.134 | 1/2 | 1-1/8 | | |
| **95-078** | 21 | 5/8 | | | 2.5 | 0.250 | 0 | 1 | | |
| **95-086** | 21 | 5 pt. star | | | 2.5 | 0.203 | 0 | 1.000 | | |
| **95-621** | 21 | 5/8 | 3/8 | 1-7/8 | 2.5 | 0.187 | 1/2 | 3/4 | | G3™ |
| **96-300** | 21 | 3/4 | | | 3 | 0.203 | 1/2 | 1 | | G3™ |
| **96-346** | 21 | 1/2 | | | 2.5 | 0.203 | 5/16 | 1 | | G3™ |
| **96-347** | 21 | 5/8 | | | 2.5 | 0.203 | 0 | 3/4 | | G3™ |
| **96-702** | 21 | 5/8 | | | 2.5 | 0.203 | 1/2 | 1 | | G3™ |
| **96-900** | 21 | 5 pt. star | | | 2.5 | 0.187 | 0 | 3/4 | | G3™ |
| **98-071** | 21 | 3/4 | | | 3 | 0.203 | 1/2 | 1-5/16 | | |
| **98-098** | 21 | bow-tie | 5/16 | 2-1/2 | 2.25 | 0.134 | 1/4 | 13/16 | | |
| **98-631** | 21 | bow-tie | 5/16 | 2-1/2 | 2.5 | 0.187 | 5/16 | 3/4 | | G3™ |
| **99-502** | 21 | 5/8 | | | 3 | 0.203 | 0 | 1-3/16 | | |
| **95-623** | 21 | 5/8 5 pt. star | | | 2.500 | 0.164 | 3/8 | 1-7/8 | | |
| **591-635** | 21-1/8 | 3/4 | 5/16 | 2-1/2 | 3 | 0.164 | 5/16 | 1 | | G5™ |
| **91-058** | 21-1/8 | 3/4 | 5/16 | 2-1/2 | 2.75 | 0.187 | 1/4 | 1-3/8 | | |
| **91-635** | 21-1/8 | 3/4 | 5/16 | 2-1/2 | 2.5 | 0.187 | 1/4 | 3/4 | | G3™ |
| **98-088** | 21-1/8 | 5/8 6 pt. star | | | 3 | 0.164 | 3/8 | 1-5/16 | | |
| **98-090** | 21-1/8 | 5/8 6 pt. star | | | 2.75 | 0.187 | 1/4 | 1-3/8 | | |
| **98-118** | 21-3/16 | 5/8 | 5/16 | 2-1/2 | 3.000 | 0.138 | 7/16 | 1-1/8 | 5/16 | |
| **98-112** | 21-3/16 | 5/8 | 5/16 | 2-1/2 | 2.750 | 0.138 | 7/16 | 1-1/8 | 5/16 | |
| **198-059** | 21-3/16 | 5/8 6 pt. star | | | 2.75 | 0.149 | 3/8 | 1-1/2 | | |
| **198-153** | 21-3/16 | 5/8 6 pt. star | | | 3 | 0.149 | 5/16 | 1-1/4 | | |
| **391-605** | 21-3/16 | 13/16 | | | 3 | 0.250 | 7/16 | 1 | | G6® |
| **391-610** | 21-3/16 | 1 | | | 3 | 0.250 | 7/16 | 1 | | G6® |
| **598-600** | 21-3/16 | 3/8 | 5/16 | 2-1/2 | 3 | 0.149 | 5/16 | 1 | | G5™ |
| **598-629** | 21-3/16 | 5/8 6 pt. star | | | 3 | 0.164 | 5/16 | 1 | | G5™ |
| **91-605** | 21-3/16 | 13/16 | | | 2.25 | 0.149 | 7/16 | 13/16 | | |
| **91-610** | 21-3/16 | 1 | | | 2.25 | 0.149 | 7/16 | 1 | | |
| **96-350** | 21-3/16 | 3/4 | 5/16 | 2-1/2 | 2.5 | 0.203 | 3/8 | 1 | | G3™ |
| **98-093** | 21-3/16 | 5/8 6 pt. star | | | 2.75 | 0.149 | 3/8 | 7/8 | | |
| **98-153** | 21-3/16 | 5/8 6 pt. star | | | 3 | 0.149 | 5/16 | 15/16 | | |
| **98-499** | 21-3/16 | 3/8 | 5/16 | 2-1/2 | 3 | 0.149 | 5/16 | 1-1/4 | | |
| **98-600** | 21-3/16 | 3/8 | 5/16 | 2-1/2 | 2.5 | 0.187 | 5/16 | 3/4 | | G3™ |
| **98-629** | 21-3/16 | 5/8 6 pt. star | | | 2.5 | 0.187 | 5/16 | 3/4 | | G3™ |
| **98-067** | 21-1/4 | 5/8 5 pt. star | | | 2.500 | 0.164 | 9-16 | 1-3/16 | | |
| **98-099** | 21-1/4 | 5/8 | 3/8 | 3 | 2.500 | 0.138 | 7/16 | 1-1/8 | 3/8 | |
| **197-019** | 21-1/4 | 7/8 | 3/8 | 3-9/16 | 2.25 | 0.134 | 3/8 | 1 | | |
| **597-601** | 21-1/4 | 7/8 | | | 3 | 0.164 | 3/8 | 1 | | G5™ |
| **91-332** | 21-1/4 | 3/4 | 5/16 | 2-1/2 | 3 | 0.203 | 3/8 | 15/16 | | |
| **92-101** | 21-1/4 | 3/4 | 3/8 | 3-1/2 | 3.25 | 0.120 | 1-5/16 | 1 | | |
| **97-008** | 21-1/4 | 7/8 | | | 2.25 | 0.149 | 3/8 | 1-1/8 | | |
| **97-013** | 21-1/4 | 7/8 | | | 2.25 | 0.187 | 3/8 | 1-1/8 | | |
| **97-014** | 21-1/4 | 7/8 | | | 2.25 | 0.149 | 7/16 | 13/16 | | |
| **97-020** | 21-1/4 | 7/8 | | | 2.25 | 0.134 | 7/16 | 1 | | |
| **97-601** | 21-1/4 | 7/8 | | | 2.5 | 0.187 | 3/8 | 3/4 | | G3™ |
| **391-607** | 21-5/16 | 13/16 | | | 3 | 0.250 | 0 | 1 | | G6® |
| **91-607** | 21-5/16 | 13/16 | | | 2.25 | 0.149 | 0 | 5/8 | | |

| OREGON | Length | Center Hole | Outer Hole | Center to Center | Width | Thickness | Offset | Air Lift | L-Cut | Type |
|---|---|---|---|---|---|---|---|---|---|---|
| **97-005** | 21-5/16 | 13/16 | | | 2.75 | 0.134 | 5/16 | 13/16 | | |
| **592-615** | 21-3/8 | 7 pt. star | | | 3 | 0.203 | 3/8 | 1 | | G5™ |
| **92-110** | 21-3/8 | 7 pt. star | | | 2.75 | 0.203 | 3/8 | 1-5/16 | | |
| **92-119** | 21-3/8 | 13/16 | | | 2.75 | 0.187 | 7/8 | 1-1/4 | | |
| **92-615** | 21-3/8 | 7 pt. star | | | 2.5 | 0.203 | 1/4 | 3/4 | | G3™ |
| **92-676** | 21-3/8 | 11/16 | 3/8 | 3-11/16 | 2.5 | 0.187 | 3/8 | 1 | | G3™ |
| **192-106** | 21-7/16 | 7 pt. star | | | 2.75 | 0.164 | 7/16 | 7/8 | | |
| **91-446** | 21-7/16 | 13/16 | | | 2.5 | 0.203 | 13/16 | 1-1/4 | | |
| **91-449** | 21-7/16 | 11/16 | | | 2.5 | 0.164 | 7/16 | 1-1/16 | | |
| **91-604** | 21-7/16 | 13/16 | | | 2.5 | 0.203 | 13/16 | 3/4 | | G3™ |
| **96-340** | 21-7/16 | 11/16 | | | 2.5 | 0.203 | 7/16 | 1 | | G3™ |
| **94-019** | 21-1/2 | 1/2 | | | 2.5 | 0.187 | 3/16 | 11/16 | | |
| **94-621** | 21-1/2 | 1/2 | | | 2.5 | 0.203 | 3/16 | 3/4 | | G3™ |
| **92-184** | 21-9/16 | 11/16 | | | 2.500 | 0.250 | 9-16 | 1-1/8 | | |
| **391-612** | 21-9/16 | 11/16 | | | 3 | 0.250 | 5/8 | 1 | | G6® |
| **394-129** | 21-9/16 | 5/8 | | | 3 | 0.250 | 5/16 | 1 | | G6® |
| **94-068** | 21-9/16 | 5/8 | | | 2.25 | 0.164 | 9/16 | 13/16 | | |
| **94-069** | 21-9/16 | 5/8 | | | 2.25 | 0.164 | 5/8 | 1-1/4 | | |
| **96-362** | 21-9/16 | 5/8 | | | 2.25 | 0.187 | 5/8 | 3/4 | | G3™ |
| **596-771** | 21-5/8 | 13/16 | | | 3 | 0.203 | 1/2 | 1 | | G5™ |
| **90-309** | 21-5/8 | 13/16 | | | 2.5 | 0.250 | 1/2 | 1-1/4 | | |
| **91-590** | 21-5/8 | 13/16 | | | 3 | 0.250 | 7/16 | 1-5/16 | | |
| **97-026** | 21-5/8 | 3/8 | | | 2.25 | 0.134 | 7/16 | 13/16 | L | |
| **99-134** | 21-5/8 | 3/8 | 3/8 | 1-7/8 | 2.25 | 0.134 | 1/4 | 1-1/8 | | |
| **396-771** | 21-9/16 | 13/16 | | | 3 | 0.250 | 1/2 | 1 | | G6® |
| **596-362** | 21-9/16 | 5/8 | | | 3 | 0.187 | 5/8 | 1 | | G5™ |
| **191-139** | 21-11/16 | 11/16 | 3/8 | 3-11/16 | 2.52 | 0.164 | 7/16 | 1 | | |
| **94-045** | 21-11/16 | 1/2 | | | 2.5 | 0.250 | 1/2 | 1 | | |
| **94-322** | 21-11/16 | 7/16 | 3/8 | 2-1/2 | 2.25 | 0.149 | 7/16 | 13/16 | | |
| **96-012** | 21-11/16 | 3/8 | | | 4 | 0.134 | 0 | 1-5/16 | | |
| **96-607** | 21-11/16 | 7/16 | 3/8 | 2-1/2 | 2.25 | 0.149 | 7/16 | 3/4 | | G3™ |
| **96-708** | 21-11/16 | 1/2 | | | 2.5 | 0.250 | 1/2 | 1 | | G3™ |
| **195-021** | 21-3/4 | 5/8 | 3/8 | 1-7/8 | 2.25 | 0.134 | 1/2 | 15/16 | | |
| **595-602** | 21-3/4 | 5/8 | 3/8 | 1-7/8 | 3 | 0.149 | 1/2 | 1 | | G5™ |
| **69-246-0** | 21-3/4 | 1 | 3/8 x 1/2 | 1-7/16 | 2.5 | 0.149 | 0 | 1 | | G3™ |
| **69-257-0** | 21-3/4 | 1 | 3/8 x 1/2 | 1-7/16 | 2.25 | 0.149 | 5/8 | 5/8 | | |
| **69-262-0** | 21-3/4 | 1 | 3/8 x 1/2 | 1-7/16 | 2.25 | 0.149 | 0 | 5/8 | | |
| **69-267-0** | 21-3/4 | 1 | 3/8 x 1/2 | 1-7/16 | 2.5 | 0.149 | 5/8 | 1 | | G3™ |
| **90-146** | 21-3/4 | 3/8 | 3/8 x 1-3/8 | 2-1/2 | 2.25 | 0.149 | 1/8 | 5/8 | | |
| **95-023** | 21-3/4 | 5/8 | 3/8 | 1-7/8 | 2.5 | 0.149 | 9/16 | 7/8 | | |
| **95-042** | 21-3/4 | 5/8 | 3/8 | 1-7/8 | 2.5 | 0.149 | 7/16 | 15/16 | | |
| **95-073** | 21-3/4 | 5/8 | 3/8 | 1-7/8 | 2.25 | 0.134 | 9/16 | 1-3/16 | | |
| **95-602** | 21-3/4 | 5/8 | 3/8 | 1-7/8 | 2.5 | 0.187 | 1/2 | 3/4 | | G3™ |
| **97-001** | 21-13/16 | 3/8 | | | 2.25 | 0.149 | 3/8 | 1-5/16 | | |
| **396-710** | 21-7/8 | 7/8 | | | 3 | 0.250 | 3/8 | 1 | | G6® |
| **596-722** | 21-7/8 | 7/8 | | | 3 | 0.203 | 3/8 | 1 | | G5™ |
| **90-622** | 21-7/8 | 3/8 | 3/8 x 1-3/8 | 2-1/2 | 2.25 | 0.149 | 1/4 | 5/8 | | |
| **92-120** | 21-7/8 | 7/8 | | | 2.5 | 0.312 | 3/8 | 7/8 | | |
| **97-015** | 21-7/8 | 3/8 | | | 2.25 | 0.134 | 3/8 | 11/16 | | |
| **92-602** | 21-15/16 | 3/4 | | | 2.5 | 0.203 | 1/2 | 3/4 | | G3™ |
| **95-076** | 21-15/16 | 5 pt. star | | | 2.25 | 0.134 | 9/16 | 13/16 | | |
| **95-615** | 21-15/16 | 5 pt. star | | | 2.25 | 0.134 | 9/16 | 3/4 | | G3™ |
| **98-005** | 21-15/16 | 13/16 | 3/8 | 2-1/2 | 2.25 | 0.134 | 5/16 | 1-1/8 | | |
| **98-050** | 21-15/16 | bow-tie | 5/16 | 2-1/2 | 2.25 | 0.134 | 5/16 | 13/16 | | |
| **98-051** | 21-15/16 | bow-tie | 5/16 | 2-1/2 | 2.25 | 0.134 | 1/4 | 15/16 | | |
| **92-922** | 22 | 7/8 | 1/4 | 3 | 2.750 | 0.164 | 1 1/16 | 13/16 | 1/4 | |
| **92-921** | 22 | 7/8 | 1/4 | 3 | 2.750 | 0.164 | 1 1/16 | 13/16 | 1/4 | |
| **98-095** | 22 | 5/8 5 pt. star | | | 3.148 | 0.149 | 1/4 | 1-1/2 | | |

# Blades by Length

| OREGON | Length | Center Hole | Outer Hole | Center to Center | Width | Thickness | Offset | Air Lift | L-Cut | Type |
|---|---|---|---|---|---|---|---|---|---|---|
| **394-075** | 22 | 1/2 | | | 3 | 0.250 | 1/2 | 1 | | G6® |
| **591-611** | 22 | 3/8 | 3/8 | 2-3/4 | 3 | 0.134 | 5/16 | 1 | | G5™ |
| **91-051** | 22 | 3/8 | 3/8 | 3 | 2.25 | 0.187 | 1/2 | 13/16 | | |
| **91-611** | 22 | 3/8 | 3/8 | 2-3/4 | 2.25 | 0.164 | 3/16 | 1-1/4 | | |
| **91-912** | 22 | 5/8 | 3/16 | 3 | 2.75 | 0.203 | 1-1/16 | 3/4 | L | |
| **91-913** | 22 | 5/8 | 3/16 | 3 | 2.75 | 0.203 | 1-1/16 | 3/4 | | |
| **94-075** | 22 | 1/2 | | | 2.5 | 0.250 | 1/2 | 15/16 | | |
| **94-076** | 22 | 1/2 | | | 2.5 | 0.250 | 1/2 | 1 | | |
| **94-077** | 22 | 1/2 | | | 2.5 | 0.187 | 7/16 | 1 | | |
| **96-075** | 22 | 1/2 | | | 2.5 | 0.187 | 1/2 | 3/4 | | G3™ |
| **391-598** | 22-3/16 | 1/2 | | | 3 | 0.250 | 0 | 1 | | G6® |
| **396-798** | 22-3/16 | 7/16 | 3/8 | 1-9/16 | 3 | 0.250 | 0 | 1 | | G6® |
| **91-598** | 22-3/16 | 1/2 | | | 2.5 | 0.250 | 0 | 1 | | |
| **91-701** | 22-1/4 | 3/4 | 3/8 | 2-9/16 | 2 | 0.203 | 0 | 1-1/16 | | |
| **96-654** | 22-1/4 | 3/4 | 3/8 | 2-9/16 | 2.5 | 0.203 | 0 | 3/4 | | G3™ |
| **391-591** | 22-5/16 | 1/2 | | | 3 | 0.250 | 1/2 | 1 | | G6® |
| **91-591** | 22-5/16 | 1/2 | | | 2.5 | 0.250 | 1/8 | 1-1/8 | | |
| **92-014** | 22-3/8 | 1/2 | | | 2.5 | 0.250 | 1/2 | 5/8 | | |
| **392-677** | 22-1/2 | 3/8 | 3/8 | 3 | 3 | 0.250 | 0 | 1 | | G6® |
| **396-808** | 22-1/2 | 5/8 | | | 3 | 0.250 | 5/16 | 1 | | G6® |
| **596-601** | 22-1/2 | 5/8 | | | 3 | 0.203 | 0 | 1 | | G5™ |
| **92-045** | 22-1/2 | 5/8 | | | 3 | 0.203 | 0 | 1-1/16 | | |
| **92-152** | 22-1/2 | 5/8 | | | 2.5 | 0.250 | 5/16 | 1-1/8 | | |
| **392-203** | 22-11/16 | 15/16 | | | 3 | 0.250 | 3/8 | 1 | | G6® |
| **492-732** | 22-11/16 | 15/16 | | | 3 | 0.203 | 3/8 | 1-1/16 | | |
| **195-070** | 22-7/8 | 5 pt. star | 5/16 | 3-15/16 | 2.75 | 0.164 | 5/16 | 1-1/8 | | |
| **596-370** | 22-7/8 | 5 pt. star | | | 3 | 0.187 | 5/16 | 1 | | G5™ |
| **95-074** | 22-7/8 | 5 pt. star | | | 2.25 | 0.149 | 1/8 | 15/16 | | |
| **95-370** | 22-7/8 | 5 pt. star | | | 2.5 | 0.203 | 5/16 | 1-1/4 | | |
| **96-370** | 22-7/8 | 5 pt. star | | | 2.75 | 0.187 | 1/4 | 3/4 | | G3™ |
| **94-121** | 23 | 1 | 9/16 | 6-1/2 | 2.500 | 0.312 | 11/16 | 3/4 | 9/16 | |
| **91-363** | 23 | 1/2 | 7/16 | 2-7/8 | 2.5 | 0.250 | 0 | 11/16 | L | |
| **91-364** | 23 | 1/2 | 7/16 | 2-7/8 | 2.5 | 0.250 | 0 | 11/16 | | |
| **96-696** | 23 | 1/2 | 3/8 | 2-7/8 | 2.5 | 0.250 | 0 | 1 | L | G3™ |
| **96-795** | 23 | 1/2 | 3/8 | 2-7/8 | 2.5 | 0.250 | 0 | 1 | | G3™ |
| **96-401** | 23-1/4 | 5/8 6 pt. star | | | 3 | 0.149 | 1/4 | 1 | | G3™ |
| **98-096** | 23-1/4 | 5/8 6 pt. star | | | 3.75 | 0.149 | 1/4 | 1-3/8 | | |
| **396-524** | 23-5/16 | 5/8 | | | 3 | 0.250 | 0 | 1 | | G6® |
| **91-528** | 23-5/16 | 5/8 | | | 2.5 | 0.250 | 5/16 | 1-3/16 | | |
| **92-415** | 23-3/4 | 1 | | | 2.5 | 0.203 | 0 | 1 | | |
| **96-415** | 23-3/4 | 1 | | | 2.5 | 0.187 | 0 | 3/4 | | G3™ |
| **98-111** | 23-13/16 | 5/8 | 5/16 | 2-1/2 | 2.250 | 0.122 | 7/16 | 7/8 | 5/16 | |
| **92-739** | 23-7/8 | 5/8 | | | 3 | 0.203 | 0 | 1-1/16 | | |
| **96-215** | 23-7/8 | 5/8 | | | 2.5 | 0.203 | 0 | 3/4 | L | G3™ |
| **96-216** | 23-7/8 | 5/8 | | | 2.5 | 0.203 | 0 | 3/4 | | G3™ |
| **94-122** | 24 | 1 | 9/16 | 6-1/2 | 2.500 | 0.312 | 11/16 | 3/4 | 9/16 | |
| **396-752** | 24-1/16 | 5/8 | | | 3 | 0.250 | 0 | 1 | | G6® |
| **596-752** | 24-1/16 | 5/8 | | | 3 | 0.203 | 0 | 1 | | G5™ |
| **91-453** | 24-1/16 | 1/2 | | | 2 | 0.250 | 1/2 | 7/8 | L | |
| **91-507** | 24-1/16 | 5/8 | | | 2.5 | 0.250 | 0 | 1-1/8 | | |
| **91-515** | 24-1/16 | 5/8 | | | 3 | 0.250 | 0 | 1-1/8 | | |
| **91-142** | 24-1/8 | 3/4 | | | 2.5 | 0.250 | 3/4 | 1-1/8 | | |
| **396-707** | 24-3/16 | 3/4 | | | 3 | 0.250 | 3/4 | 1 | | G6® |
| **91-374** | 24-3/8 | 5/8 | | | 3 | 0.203 | 0 | 1-1/4 | | |
| **96-699** | 24-3/8 | 5/8 | | | 3 | 0.203 | 0 | 3/4 | | G3™ |
| **92-911** | 24-7/16 | 15/16 | | | 3.000 | 0.203 | 0 | 1-1/8 | | G3™ |
| **92-918** | 24-7/16 | 15/16 | | | 3.000 | 0.203 | 0 | 1-1/8 | | G3™ |
| **91-764** | 24-7/16 | 1 | | | 2.5 | 0.203 | 3/4 | 1-3/16 | L | |

| OREGON | Length | Center Hole | Outer Hole | Center to Center | Width | Thickness | Offset | Air Lift | L-Cut | Type |
|---|---|---|---|---|---|---|---|---|---|---|
| **92-033** | 24-7/16 | 15/16 | | | 3 | 0.203 | 0 | 1-1/4 | | |
| **94-131** | 24-1/2 | 5/8 | | | 2.500 | 0.250 | 0 | 1-1/8 | | |
| **94-134** | 24-1/2 | 5/8 | | | 2.500 | 0.250 | 0 | 1 | | |
| **94-136** | 24-1/2 | 5/8 | | | 2.500 | 0.250 | 0 | 11/16 | | |
| **92-917** | 24-1/2 | 15/16 | | | 3.000 | 0.203 | 0 | 5/8 | | |
| **92-742** | 24-1/2 | 5/8 | | | 3.000 | 0.203 | 0 | 1-1/16 | | |
| **392-057** | 24-1/2 | 15/16 | | | 3 | 0.250 | 0 | 1 | | G6® |
| **393-026** | 24-1/2 | 5/8 | | | 3 | 0.250 | 7/16 | 1 | | G6® |
| **396-764** | 24-1/2 | 5/8 | | | 3 | 0.250 | 0 | 1 | | G6® |
| **396-814** | 24-1/2 | 1-1/8 | | | 3 | 0.250 | 5/8 | 1 | | G6® |
| **592-033** | 24-1/2 | 15/16 | | | 3 | 0.203 | 0 | 1 | | G5™ |
| **596-341** | 24-1/2 | 5/8 | | | 3 | 0.203 | 0 | 1 | | G5™ |
| **596-717** | 24-1/2 | 1-1/8 | | | 3 | 0.203 | 5/8 | 1 | | G5™ |
| **91-207** | 24-1/2 | 7/8 | | | 3 | 0.250 | 0 | 1 | | |
| **91-254** | 24-1/2 | 5/8 | | | 2.5 | 0.250 | 3/4 | 1-1/16 | | |
| **91-493** | 24-1/2 | 1-1/8 | | | 2.5 | 0.250 | 9/16 | 7/8 | | |
| **91-627** | 24-1/2 | 5/8 | | | 2.5 | 0.203 | 0 | 1 | | |
| **92-035** | 24-1/2 | 5/8 | | | 3 | 0.250 | 0 | 1-3/16 | | |
| **92-057** | 24-1/2 | 15/16 | | | 3 | 0.203 | 0 | 1 | | |
| **92-084** | 24-1/2 | 15/16 | | | 3 | 0.203 | 0 | 1-3/16 | | |
| **92-116** | 24-1/2 | 1-1/8 | | | 2.5 | 0.250 | 5/8 | 1-3/16 | | |
| **94-071** | 24-1/2 | 1/2 | | | 2.5 | 0.250 | 0 | 3/4 | | G3™ |
| **94-074** | 24-1/2 | 1/2 | | | 2.5 | 0.250 | 0 | 1 | | |
| **96-341** | 24-1/2 | 5/8 | | | 2.5 | 0.203 | 0 | 3/4 | | G3™ |
| **96-372** | 24-1/2 | 1-1/8 | | | 2.5 | 0.203 | 9/16 | 3/4 | | G3™ |
| **92-417** | 24-1/2 | 5/8 | | | 2.500 | 0.250 | 5/16 | 1-1/4 | | |
| **392-133** | 24-9/16 | 3/4 | | | 3 | 0.250 | 5/8 | 1 | | G6® |
| **392-416** | 24-9/16 | 5/8 | | | 3 | 0.250 | 5/16 | 1 | | G6® |
| **92-133** | 24-9/16 | 3/4 | | | 2.5 | 0.250 | 11/16 | 1-1/8 | | |
| **92-416** | 24-9/16 | 5/8 | | | 2.5 | 0.250 | 5/16 | 3/4 | | |
| **91-766** | 24-5/8 | 5/8 | | | 2.5 | 0.250 | 0 | 7/8 | | |
| **92-910** | 24-11/16 | 15/16 | | | 3.000 | 0.203 | 3/8 | 1 | | |
| **392-204** | 24-11/16 | 15/16 | | | 3 | 0.250 | 3/8 | 1 | | G6® |
| **391-731** | 24-3/4 | 1/2 | | | 3 | 0.250 | 0 | 1 | | G6® |
| **91-731** | 24-3/4 | 1/2 | | | 2.5 | 0.250 | 0 | 11/16 | | |
| **96-724** | 24-3/4 | 1/2 | | | 2.5 | 0.250 | 1/2 | 1 | | G3™ |
| **396-728** | 24-7/8 | 1 | 1/2 | 6-1/2 | 3 | 0.250 | 3/4 | 1 | | G6® |
| **91-456** | 24-7/8 | 1 | 1/2 | 6-1/2 | 2.5 | 0.250 | 3/4 | 1-1/8 | | |
| **92-114** | 24-7/8 | 7/8 | | | 3 | 0.250 | 1/2 | 1-1/4 | | |
| **96-624** | 24-7/8 | 7/8 | | | 3 | 0.203 | 13/16 | 3/4 | | G3™ |
| **92-178** | 25 | 1/2 | | | 2.500 | 0.203 | 5/16 | 1-1/4 | | |
| **396-743** | 24-15/16 | 7/8 | | | 3 | 0.250 | 1/2 | 1 | | G6® |
| **396-775** | 24-15/16 | 7/8 | | | 3 | 0.250 | 0 | 1 | | G6® |
| **591-585** | 24-15/16 | 1 | 1/2 | 5 | 3 | 0.203 | 3/8 | 1 | | G5™ |
| **596-775** | 24-15/16 | 7/8 | | | 3 | 0.203 | 0 | 1 | | G5™ |
| **91-352** | 24-15/16 | 7/16 | 7/16 | 2-7/8 | 2.5 | 0.250 | 0 | 13/16 | | |
| **91-395** | 24-15/16 | 7/8 | | | 2.5 | 0.312 | 0 | 1 | | |
| **91-585** | 24-15/16 | 1 | 1/2 | 5 | 2.5 | 0.250 | 3/8 | 1 | | |
| **92-162** | 24-15/16 | 5/8 | | | 2.5 | 0.203 | 5/16 | 1-1/4 | | |
| **93-025** | 24-15/16 | 5/8 | | | 2.5 | 0.250 | 1/2 | 1-1/4 | | |
| **96-602** | 24-15/16 | 3/4 | | | 2.5 | 0.250 | 1/4 | 1 | L | G3™ |
| **95-094** | 25 | 5/8 | | | 2.500 | 0.250 | 0 | 1 | | |
| **396-731** | 25 | 5/8 | | | 3 | 0.250 | 0 | 1 | | G6® |
| **396-737** | 25 | 1/2 | | | 3 | 0.250 | 0 | 1 | | G6® |
| **396-778** | 25 | 1/2 | | | 3 | 0.250 | 5/16 | 1 | | G6® |
| **396-815** | 25 | 3/4 | | | 3 | 0.250 | 0 | 1 | | G6® |
| **596-743** | 25 | 7/8 | | | 3 | 0.203 | 7/16 | 1 | | G5™ |
| **91-034** | 25 | 1/2 | | | 2.25 | 0.250 | 0 | 1 | | |

# Blades by Length

| OREGON® | Length | Center Hole | Outer Hole | Center to Center | Width | Thickness | Offset | Air Lift | L-Cut | Type |
|---|---|---|---|---|---|---|---|---|---|---|
| **91-036** | 25 | 1/2 | | | 2.5 | 0.250 | 1/4 | 1-1/16 | | |
| **91-533** | 25 | 1/2 | | | 2.5 | 0.250 | 5/16 | 1 | | |
| **91-544** | 25 | 1/2 | | | 2.5 | 0.250 | 5/16 | 3/4 | | |
| **91-588** | 25 | 7/8 | | | 2.5 | 0.250 | 3/8 | 1 | | |
| **91-609** | 25 | 5/8 | | | 2.5 | 0.250 | 0 | 1 | | |
| **91-917** | 25 | 5/8 | 3/16 | 3 | 2.75 | 0.203 | 1-1/16 | 7/8 | L | |
| **91-918** | 25 | 5/8 | 3/16 | 3 | 2.75 | 0.203 | 1-1/16 | 7/8 | | |
| **91-919** | 25 | 5/8 | 3/16 | 3 | 2.75 | 0.203 | 1-1/16 | 3/4 | L | |
| **91-920** | 25 | 5/8 | 3/16 | 3 | 2.75 | 0.203 | 1-1/16 | 3/4 | | |
| **92-164** | 25 | 1/2 | | | 2.5 | 0.203 | 0 | 1 | | |
| **92-167** | 25 | 7/8 | 1/4 | 3 | 2.75 | 0.164 | 1-1/16 | 13/16 | L | |
| **92-168** | 25 | 7/8 | 1/4 | 3 | 2.75 | 0.164 | 1-1/16 | 13/16 | | |
| **92-169** | 25 | 5/8 | | | 2.5 | 0.203 | 0 | 1 | | |
| **92-170** | 25 | 1 | 1/2 | 6-1/2 | 2.5 | 0.250 | 11/16 | 13/16 | | |
| **92-171** | 25 | 1 | 1/2 | 6-1/2 | 2.5 | 0.312 | 11/16 | 11/16 | | |
| **94-011** | 25 | 3/4 | | | 2.5 | 0.250 | 1/4 | 1-1/16 | L | |
| **96-778** | 25 | 1/2 | | | 2.5 | 0.250 | 5/16 | 3/4 | | G3™ |
| **91-047** | 25-3/16 | 1/2 | | | 2.5 | 0.250 | 1/2 | 15/16 | L | |
| **94-040** | 25-3/16 | 1/2 | | | 2.5 | 0.250 | 1/4 | 1-1/8 | | |
| **94-073** | 25-3/16 | 1/2 | | | 2.5 | 0.250 | 1/2 | 1-1/8 | | |
| **96-705** | 25-3/16 | 1/2 | | | 2.5 | 0.250 | 1/4 | 1 | | G3™ |
| **391-526** | 26 | 5/8 | | | 3 | 0.250 | 5/16 | 1 | | G6® |
| **91-526** | 26 | 5/8 | | | 2.5 | 0.250 | 5/16 | 1-3/16 | | |
| **96-741** | 26-15/16 | 1/2 | | | 2.5 | 0.250 | 1/2 | 1 | | G3™ |
| **91-593** | 27 | 1 | 9/16 | 6-1/2 | 2.500 | 0.312 | 3/4 | 1-3/8 | 9/16 | |
| **391-595** | 27 | 13/16 | | | 3 | 0.250 | 0 | 1 | | G6® |
| **92-176** | 27 | 5/8 | 3/16 | 3 | 2.75 | 0.203 | 1-1/16 | 7/8 | L | |
| **92-177** | 27 | 5/8 | 3/16 | 3 | 2.75 | 0.203 | 1-1/16 | 7/8 | | |
| **94-049** | 27 | 1/2 | | | 2.5 | 0.250 | 1/2 | 3/4 | | |
| **94-052** | 27 | 1/2 | | | 2.5 | 0.250 | 1/2 | 15/16 | | |
| **596-628** | 27-7/8 | 1-1/16 | 1/2 | 7-1/2 | 3 | 0.187 | 5/16 | 1 | | G5™ |
| **96-628** | 27-7/8 | 1-1/16 | 1/2 | 7-1/2 | 2.75 | 0.187 | 1/4 | 3/4 | | G3™ |
| **99-113** | 28 | 1-1/16 | 1/2 | 7-1/2 | 2.75 | 0.164 | 1/4 | 13/16 | | |
| **99-114** | 28 | 1-1/16 | 1/2 | 7-1/2 | 2.75 | 0.187 | 1/4 | 13/16 | | |
| **99-131** | 28 | 1-1/16 | 1/2 | 7-1/2 | 2.75 | 0.164 | 1/4 | 13/16 | | |
| **392-302** | 28-9/16 | 3/4 | | | 3 | 0.250 | 5/8 | 1 | | G6® |
| **92-302** | 28-9/16 | 3/4 | | | 2.5 | 0.250 | 11/16 | 1-1/8 | | |
| **91-489** | 29 | 1/2 | 1/2 | 6-1/2 | 2.5 | 0.312 | 11/16 | 1 | | |
| **91-399** | 29-9/16 | 11/16 | | | 2.5 | 0.203 | 7/16 | 1-3/8 | | |
| **595-807** | 29-5/8 | 5 pt. star | | | 3 | 0.149 | 5/16 | 1 | | G5™ |
| **99-112** | 29-7/8 | 1-1/16 | 1/2 | 7-1/2 | 2.75 | 0.187 | 1/4 | 13/16 | | |
| **96-630** | 29-15/16 | 1-1/16 | 1/2 | 7-1/2 | 2.75 | 0.187 | 1/16 | 3/4 | | G3™ |
| **96-631** | 29-15/16 | 11/16 | | | 2.75 | 0.203 | 9/16 | 3/4 | | G3™ |
| **98-032** | 29-15/16 | 3/8 | 5/16 | 2-1/2 | 3 | 0.149 | 1/4 | 1-1/4 | | |
| **97-330** | 30 | 13/16 | | | 2.75 | 0.149 | 5/8 | 1-1/8 | | |
| **94-021** | 31-7/16 | 5/8 | | | 2.5 | 0.187 | 5/16 | 1-3/16 | | |
| **94-123** | 32 | 1 | 9/16 | 10 | 2.500 | 0.312 | 13/16 | 3/4 | 9/16 | |
| **96-633** | 32-7/8 | 1-1/16 | 1/2 | 7-1/2 | 2.75 | 0.187 | 1/4 | 3/4 | | G3™ |
| **99-117** | 32-7/8 | 1-1/16 | 1/2 | 7-1/2 | 2.75 | 0.187 | 1/4 | 1 | | |

# Blades – Universal

## Adapter Kits

| OREGON | Description | Product Code |
|---|---|---|
| 02-035 | Adapter Kit for One-For-All Blades<br>Contains adapters for 3/8", 1/2", 9/16", 5/8", 11/16", 3/4", & 13/16" center holes, plus 3/8" & 5/8" center hole blade washers | |

## Universal — Rolled Lift

| OREGON | Length | Center | Outer | C to C | W/T | Offset | Lift | Prod. Code |
|---|---|---|---|---|---|---|---|---|
| 90-142 | 17-3/4 | 3/8 | 3/8 x 1-3/8 | 2-1/2 | 2.25/.149 | 1/8 | 5/8 | |
| 90-143 | 18-3/4 | 3/8 | 3/8 x 1-3/8 | 2-1/2 | 2.25/.149 | 1/8 | 5/8 | |
| 90-144 | 19-3/4 | 3/8 | 3/8 x 1-3/8 | 2-1/2 | 2.25/.149 | 1/8 | 5/8 | |
| 90-145 | 20-3/4 | 3/8 | 3/8 x 1-3/8 | 2-1/2 | 2.25/.149 | 1/8 | 5/8 | |
| 90-146 | 21-3/4 | 3/8 | 3/8 x 1-3/8 | 2-1/2 | 2.25/.149 | 1/8 | 5/8 | |

## Universal — Mulching Blades

| OREGON | Length | Center | Outer | C to C | W/T | Offset | Lift | Prod. Code |
|---|---|---|---|---|---|---|---|---|
| 90-618 | 17-7/8 | 3/8 | 3/8 x 1-3/8 | 2-1/2 | 2.25/.149 | 1/4 | 5/8 | |
| 90-619 | 18-7/8 | 3/8 | 3/8 x 1-3/8 | 2-1/2 | 2.25/.149 | 1/4 | 5/8 | |
| 90-620 | 19-7/8 | 3/8 | 3/8 x 1-3/8 | 2-1/2 | 2.25/.149 | 1/4 | 5/8 | |
| 90-621 | 20-7/8 | 3/8 | 3/8 x 1-3/8 | 2-1/2 | 2.25/.149 | 1/4 | 5/8 | |
| 90-622 | 21-7/8 | 3/8 | 3/8 x 1-3/8 | 2-1/2 | 2.25/.149 | 1/4 | 5/8 | |

## Universal — Dethatcher / Bagger Blades

Dethatcher blades 690-617-0, 690-521-0, & 690-618-0 are supplied with Oregon® 89-801 dethatching spring and Oregon 02-035 adapter kit.

| OREGON | Length | Center | Outer | C to C | W/T | Offset | Lift | Prod. Code |
|---|---|---|---|---|---|---|---|---|
| 690-617-0 | 16 | 1 | 3/8 x 1-1/2 | 3-1/4 | 2.25/.149 | 0 | 1/2 | |
| 690-618-0 | 18 | 1 | 3/8 x 1-1/2 | 3-1/4 | 2.25/.149 | 0 | 1/2 | |
| 690-521-0 | 20 | 1 | 3/8 x 1-1/2 | 3-1/4 | 2.25/.149 | 0 | 1/2 | |

## Replacement Springs for Dethatcher Blades

| OREGON | Description | Product Code |
|---|---|---|
| 89-801 | Replacement dethatcher springs<br>(2) needed for each blade | |

## Allis Chalmers

| | OREGON | OEM No. | Length | Center | Outer | C to C | W / T | Off | Lift | Prod. Code |
|---|---|---|---|---|---|---|---|---|---|---|
| | **99-132** | 1737228A<br>1737228BZYP | **16-1/8** | 3/4 | | | 2.50/.203 | 0 | 1-1/16 | |
| (3) for 46" cut, 130, 23420 | | | | | | | | | | |
| | **599-132** | | 16-1/8 | 3/4 | | | 3.00/.203 | 0 | 1 | |
| Gator® G5™ | | | | | | | High-Lift Xtended Fusion® | | | G5 |
| | **91-605** | 1737816BM<br>1737816BMYP | **21-3/16** | 13/16 | | | 2.25/.149 | 7/16 | 13/16 | |
| (2) for 42" cut | | | | | | | | | | |
| | **391-605** | | 21-3/16 | 13/16 | | | 3.00/.250 | 7/16 | 1 | |
| Gator G6® | | | | | | | Heavy-Duty High-Lift Xtended Fusion® | | | G6 |

## Ariens

| | | | | | | | | | | |
|---|---|---|---|---|---|---|---|---|---|---|
| | **92-040** | 00173800<br>03498400 | **13-7/8** | 5/8 | | | 2.00/.203 | 1/8 | 1-1/16 | |
| (3) for 40" cut, 915035, 915051, & 915075 Zoom 1640, 915043, 915063, 915065, 915317, & 915502 Zoom 1540, 915063 1540 Mini Zoom, 915067 Zoom 1740, 915077, 915087 (000101 – ) HVZ, 915087, 915103, & 915600 Zoom 1840, & 915133 Zoom 2040 | | | | | | | Xtended | | | |
| | **91-244** | | 13-7/8 | 5/8 | | | 2.00/.203 | 1/8 | 1-1/16 | |
| (3) for 40" cut, high-lift, 31220, 34427, 38685, 39000, & 45810, 49225, 51973, 834026, & 834030 GEM, 885005, 887020, & 887029, 915034 & 915074 ZT 1640, 915042 & 915042 ZT 1540, 915044 ZT 1740, 915076 ZT 1840, 991003 PM 100Z, 91005-000101 Pro-Master 100 | | | | | | | | | | |
| | **96-040** | 00272800<br>1600500 | 13-7/8 | 5/8 | | | 2.25/.203 | 0 | 3/4 | |
| Gator G3™ | | | | | | | | | | G3 |
| | **92-217** | 02961600 | **14-1/2** | 5/8 | | | 2.50/.203 | 5/16 | 1-1/8 | |
| (3) for 42" cut | | | | | | | | | | |
| | **96-808** | 02961600 | **14-1/2** | 5/8 | | | 2.50/.203 | 5/16 | 3/4 | |
| (3) for 42" cut | | | | | | | | | | G3 |
| | **94-026** | | **15-1/2** | 5/8 | | | 2.50/.187 | 5/16 | 3/4 | |
| (3) for 44" cut | | | | | | | | | | |
| | **94-039** | | 15-1/2 | 5/8 | | | 2.50/.203 | 5/16 | 15/16 | |
| (3) for 44" cut, high-lift | | | | | | | | | | |

GROUP CONTINUES

B

# Blades - OEM Replacements

## Ariens

| | OREGON | OEM No. | Length | Center | Outer | C to C | W / T | Off | Lift | Prod. Code |
|---|---|---|---|---|---|---|---|---|---|---|
| | | | GROUP CONTINUES | | | | | | | |
| (3) for 44" cut, mulcher | **94-061** | | 15-1/2 | 5/8 | | | 2.50/.187 | 5/16 | 1 | |
| Gator® G3™ | **94-615** | 00272900 | 15-1/2 | 5/8 | | | 2.50/.203 | 5/16 | 3/4 | G3 |
| (3) for 48" cut, Zoom | **92-153** | 00450200<br>02982000 | **16-3/16** | 5/8 | | | 2.50/.250 | 5/16 | 1-1/8 | |
| Gator G5™ | **596-816** | 0027300 | 16-3/16 | 5/8 | | | 3.00/.203 | 3/8 | 1 | High-Lift Xtended Fusion® G5 |
| Gator G6® | **396-809** | | 16-3/16 | 5/8 | | | 3.00/.250 | 3/8 | 1 | Heavy-Duty High-Lift Xtended Fusion® G6 |
| (3) for 48" cut, 915039 (000101 - ) & 915057 (000101 - ) Zoom 2048, 915057 (005000 - ) & 915057 (010000 - ) Zoom 2148, 915081 Zoom 2348, 915600 (000101 - ) 1840, 915601 (000101 - ) 2044, 915602 (000101 - ) 2348, 992099 (000101 - ) Zoom 2148 XL, 992142 (000101 - ) Zoom 2348 XL | **91-183** | 04919100 | **16-1/4** | 5/8 | | | 2.50/.250 | 0 | 1 | |
| (3) for 48" cut | **91-180** | | 16-1/4 | 5/8 | | | 2.50/.187 | 0 | 1 | |
| (3) for 48" cut | **91-313** | | 16-1/4 | 5/8 | | | 2.50/.203 | 0 | 1 | |
| (3) for 48" cut | **99-127** | 00273000<br>04920600 | 16-1/4 | 5/8 | | | 2.50/.203 | 0 | 1-1/16 | |
| (3) for 48" cut, mulching | **91-368** | | 16-1/4 | 5/8 | | | 2.50/.203 | 0 | 1 | Xtended |
| Gator® G3™ | **96-310** | | 16-1/4 | 5/8 | | | 2.50/.203 | 0 | 3/4 | G3 |
| Gator G5™ | **596-310** | | 16-1/4 | 5/8 | | | 3.00/.203 | 0 | 1 | High-Lift Xtended Fusion® G5 |
| Gator G6® | **396-716** | | 16-1/4 | 5/8 | | | 3.00/.250 | 0 | 1 | Heavy-Duty High-Lift Xtended Fusion® G6 |

B

## Ariens

| | OREGON | OEM No. | Length | Center | Outer | C to C | W / T | Off | Lift | Prod. Code |
|---|---|---|---|---|---|---|---|---|---|---|
| (3) for 48" cut, 831031 GT deck | **91-003** | 03027800<br>03027851<br>03027859<br>03123700<br>03123751<br>03123759<br>21085400 | **16-9/16** | 3/4 | | | 2.50/.203 | 7/16 | 7/8 | |
| (3) for 48" cut | **195-062** | 21547939 | **16-11/16** | 5 pt. Star | 5/16 | 3-15/16 | 2.50/.203 | 0 | 1-1/4 | Xtended — 100 |
| (3) for 48" cut, mulching | **95-068** | 21547257 | 16-11/16 | 5 pt. Star | | | 2.50/.203 | 5/16 | 13/16 | Xtended |
| Gator G3 | **96-615** | | 16-11/16 | 5 pt. Star | | | 2.50/.203 | 0 | 1 | G3 |
| Gator G5 | **596-615** | | 16-11/16 | 5 pt. Star | | | 3.00/.187 | 0 | 1 | High-Lift Xtended Fusion® — G5 |
| (2) for 34" cut, (3) for 50" cut, 915061 & 915316 1434 Mini Zoom, 915069 & 915071 1534 Mini Zoom, 915085 & 915135 Zoom 2350, 915087, 915087 (000101 - , HVZ), & 915103 Zoom 1840, 915105 Zoom 2150, 915107 Zoom 2450, & 915133 Zoom 2040 | **91-242** | 08861600<br>08899300 | **17** | 5/8 | | | 2.00/.203 | 5/16 | 1-1/8 | |
| Gator G6 | **396-805** | 08866800 | 17 | 5/8 | | | 3.00/.250 | 5/16 | 1 | Heavy-Duty High-Lift Xtended Fusion® — G6 |
| (2) for 36" cut, (3) for 52" cut, high-lift, Zoom | **92-151** | 00450300<br>03253800 | **18** | 5/8 | | | 2.50/.250 | 5/16 | 1-1/8 | |
| Gator® G5™ | **596-817** | 00273100<br>04916400 | 18 | 5/8 | | | 3.00/.203 | 5/16 | 1 | High-Lift Xtended Fusion® — G5 |
| Gator G6® | **396-806** | | 18 | 5/8 | | | 3.00/.250 | 5/16 | 1 | Heavy-Duty High-Lift Xtended Fusion® — G6 |
| (3) for 54" cut, Zoom | **92-157** | 02961700<br>70763400 | **18-7/16** | 5/8 | | | 2.50/.203 | 5/16 | 1-1/8 | |
| Gator G5 | **596-818** | | 18-7/16 | 5/8 | | | 3.00/.203 | 5/16 | 1 | High-Lift Xtended Fusion® — G5 |

# Blades - OEM Replacements

## Ariens

| | OREGON | OEM No. | Length | Center | Outer | C to C | W / T | Off | Lift | Prod. Code |
|---|---|---|---|---|---|---|---|---|---|---|
| (3) for 54" cut | **195-072** | 21546235 | **18-7/16** | 5 pt. Star | 5/16 | 3-15/16 | 2.75/.187 | 1/2 | 1-3/16 | Xtended — 100 |
| (3) for 54" cut, mulching | **95-082** | 21546848 | 18-7/16 | 5 pt. Star | | | 2.50/.187 | 5/16 | 13/16 | |
| Gator G3™ | **95-605** | | 18-7/16 | 5 pt. Star | | | 2.50/.187 | 1/2 | 3/4 | G3 |
| Gator G5 | **595-605** | | 18-7/16 | 5 pt. Star | | | 3.00/.164 | 1/2 | 1 | High-Lift Xtended Fusion® — G5 |
| (2) for 40" cut, 1440 Sport Zoom, 1440 RER, EZR 1440, 1540, 1640, 1740, Sierra 1340G, 1340H, 1440G, 1440H, 1540H, 1640H, YT13G, YT13H, YT14G, YT15G, YT15H, YT1540, YT16H, & YT16.5H | **191-015** | 03607059<br>03624700<br>03624751<br>03624759 | **20-1/2** | 3/4 | | | 2.50/.187 | 1/2 | 15/16 | Xtended — 100 |
| (2) for 40" cut, high-lift, 1440 Sport Zoom, 1440 RER, EZR 1440, 1540, 1640, 1740, Sierra 1340G, 1340H, 1440G, 1440H, 1540H, 1640H, YT13G, YT13H, YT14G, YT15G, YT15H, YT1540, YT16H, & YT16.5H | **91-144** | | 20-1/2 | 3/4 | | | 3.00/.203 | 1/2 | 1-5/16 | |
| Gator G3 | **96-677** | | 20-1/2 | 3/4 | | | 3.00/.203 | 1/2 | 1 | G3 |
| (3) for 60" cut, Zoom | **92-159** | 03253900<br>08899100<br>09081200<br>70760900 | **20-1/2** | 5/8 | | | 2.50/.250 | 5/16 | 1-1/8 | |
| Gator® G5™ | **596-815** | | 20-1/2 | 5/8 | | | 3.00/.203 | 5/16 | 1 | High-Lift Xtended Fusion® — G5 |
| Gator G6® | **396-807** | | 20-1/2 | 5/8 | | | 3.00/.250 | 5/16 | 1 | Heavy-Duty High-Lift Xtended Fusion® — G6 |
| 21" cut, 911000 series zone start walk-behind | **91-005** | 01120300<br>01128500<br>01137000<br>01137051<br>01137059<br>01182400 | **20-9/16** | 3/8 | | | 2.75/.134 | 5/16 | 1 | |
| Gator G3™ | **96-041** | | 20-9/16 | 3/8 | | | 2.75/.134 | 1/4 | 3/4 | G3 |

B

## Ariens

| | OREGON | OEM No. | Length | Center | Outer | C to C | W / T | Off | Lift | Prod. Code |
|---|---|---|---|---|---|---|---|---|---|---|
| (2) for 42" cut | **195-032** | 21546095 | **21-1/16** | 5 pt. Star | | | 2.25/.149 | 1/8 | 1-1/16 | Xtended 100 |
| (2) for 42" cut, heavy-duty version of 195-032 | **195-039** | | 21-1/16 | 5 pt. Star | 5/16 | 3-1/8 | 2.25/.187 | 1/8 | 1-1/18 | Xtended 100 |
| (2) for 42" cut, sand | **195-048** | | 21-1/16 | 5 pt. Star | 5/16 | 3-1/8 | 2.25/.187 | 0 | 3/4 | Xtended 100 |
| (2) for 42" cut, mulching | **195-005** | | 21-1/16 | 5 pt. Star | | | 2.25/.134 | 1/8 | 7/8 | Xtended 100 |
| (2) for 42" cut, heavy-duty version of 195-005 | **195-019** | | 21-1/16 | 5 pt. Star | | | 2.25/.149 | 1/8 | 15/16 | Xtended 100 |
| Gator G3 | **96-900** | | 21-1/16 | 5 pt. Star | | | 2.50/.187 | 0 | 3/4 | G3 |
| Gator G5 | **596-900** | | 21-1/16 | 5 pt. Star | | | 3.00/.164 | 0 | 1 | High-Lift Xtended Fusion® G5 |
| Gator G3 | **92-602** | 01584500<br>1584500 | **21-15/16** | 3/4 | | | 2.50/.203 | 1/2 | 3/4 | G3 |
| (2) for 46" cut, high-lift | **195-070** | 21546611 | **22-7/8** | 5 pt. Star | 5/16 | 3-15/16 | 2.75/.164 | 5/16 | 1-1/8 | Xtended 100 |
| (2) for 46" cut, heavy-duty | **95-370** | | 22-7/8 | 5 pt. Star | | | 2.50/.203 | 5/16 | 1-1/4 | Xtended |
| (2) for 46" cut, mulching | **95-074** | | 22-7/8 | 5 pt. Star | | | 2.25/.149 | 1/8 | 15/16 | Xtended |
| Gator® G3™ | **96-370** | | 22-7/8 | 5 pt. Star | | | 2.75/.187 | 1/4 | 3/4 | Xtended G3 |
| Gator G5™ | **596-370** | | 22-7/8 | 5 pt. Star | | | 3.00/.187 | 5/16 | 1 | High-Lift Xtended Fusion® G5 |

B

# Blades - OEM Replacements

## Ariens

| | OREGON | OEM No. | Length | Center | Outer | C to C | W / T | Off | Lift | Prod. Code |
|---|---|---|---|---|---|---|---|---|---|---|
| (1) for 24" cut, walk-behind | **92-415** | 04159600 | **23-3/4** | 1 | | | 2.50/.203 | 0 | 1 | |
| Gator G3 | **96-415** | | 23-3/4 | 1 | | | 2.50/.187 | 0 | 3/4 | G3 |
| (3) for 72" cut | **92-416** | 09290500 | **24-9/16** | 5/8 | | | 2.50/.250 | 5/16 | 3/4 | |
| Gator G6® | **392-416** | 09254700<br>09290600 | 24-9/16 | 5/8 | | | 3.00/.250<br>Heavy-Duty High-Lift Xtended Fusion® | 5/16 | 1 | G6 |

## AYP

| | | | | | | | | | | |
|---|---|---|---|---|---|---|---|---|---|---|
| (3) for 38" cut, GT180 | **95-058** | 106038X<br>121657X | **14-7/8** | 5/8 | | | 2.50/.203<br>Xtended | 0 | 1 | |
| (3) for 44" cut | **95-014** | 100140M<br>106635X<br>122265X<br>25034<br>532025034<br>532106635<br>532122265<br>917122265X | **15-3/8** | 3/8 | | | 2.25/.187 | 0 | 1 | |
| Gator® G3™ | **95-607** | | 15-3/8 | 3/8 | | | 2.25/.187 | 0 | 3/4 | G3 |
| (3) for 44" cut | **95-006** | 130652<br>532130652<br>917130652MS<br>917532130652 | **15-3/8** | 5 pt. Star | | | 2.25/.149 | 1/8 | 15/16 | |
| (3) for 44" cut, heavy-duty | **95-049** | | 15-3/8 | 5 pt. Star | | | 2.25/.187 | 0 | 1 | |
| (3) for 46" cut, mulching | **95-045** | 145708<br>152443<br>163819<br>532145708<br>532152443<br>917145708<br>917145708CS<br>917145708MS | **15-1/2** | 5 pt. Star | | | 2.25/.149 | 1/8 | 1 | |
| | | | | | | | | | | |

GROUP CONTINUES

## AYP

| | OREGON | OEM No. | Length | Center | Outer | C to C | W / T | Off | Lift | Prod. Code |
|---|---|---|---|---|---|---|---|---|---|---|
| (3) for 46" cut, high-lift mulching | **95-052** | 144767<br>157033<br>159705<br>170698<br>176084<br>532144767<br>532157033<br>532157353<br>532159705<br>532170698 | 15-1/2<br><br>532176084<br>917144767<br>917157033<br>917170698<br>917532144767<br>917532157353<br>917532170698<br>917532176084 | 5 pt. Star | | | 2.25/.149 | 1/8 | 1 | |
| Gator G3 | **95-614** | | 15-1/2 | 5 pt. Star | | | 2.50/.187 | 0 | 3/4 | G3 |
| Gator G5™ | **595-614** | | 15-1/2 | 5 pt. Star | | | 3.00/.164 | 0 | 1 | G5 |
| (3) for 48" cut | **99-127** | | **16-1/4** | 5/8 | | | 2.50/.203 | 0 | 1-1/16 | |
| (3) for 48" cut | **91-180** | | 16-1/4 | 5/8 | | | 2.50/.187 | 0 | 1 | |
| (3) for 48" cut | **91-183** | | 16-1/4 | 5/8 | | | 2.50/.250 | 0 | 1 | |
| (3) for 48" cut | **91-313** | | 16-1/4 | 5/8 | | | 2.50/.203 | 0 | 1 | |
| (3) for 48" cut, mulcher | **91-368** | | 16-1/4 | 5/8 | | | 2.50/.203 | 0 | 1 | Xtended |
| Gator® G3™ | **96-310** | 106041X<br>121705X | 16-1/4 | 5/8 | | | 2.50/.203 | 0 | 3/4 | G3 |
| Gator G5™ | **596-310** | | 16-1/4 | 5/8 | | | 3.00/.203 | 0 | 1 | High-Lift Xtended Fusion® G5 |
| Gator G6® | **396-716** | | 16-1/4 | 5/8 | | | 3.00/.250 | 0 | 1 | Heavy-Duty High-Lift Xtended Fusion® G6 |

GROUP CONTINUES

# Blades - OEM Replacements

## AYP

| | OREGON | OEM No. | Length | Center | Outer | C to C | W / T | Off | Lift | Prod. Code |
|---|---|---|---|---|---|---|---|---|---|---|
| (3) for 48" cut | **195-062** | 173920<br>180054<br>512258301<br>532173920<br>532180054<br>539107519<br>575938201<br>575938301<br>917173920<br>917532173920<br>917532180054<br>917539107519<br>917577203106<br>954633774 | **16-11/16** | 5 pt. Star | 5/16 | 3-15/16 | 2.50/.203 | 0 | 1-1/4 | Xtended — 100 |
| (3) for 48" cut, mulching | **95-068** | 173921<br>532173921<br>917532173921<br>954633781 | 16-11/16 | 5 pt. Star | | | 2.50/.203 | 5/16 | 13/16 | Xtended |
| Gator G3 | **96-615** | | 16-11/16 | 5 pt. Star | | | 2.50/.203 | 0 | 1 | G3 |
| Gator G5 | **596-615** | | 16-11/16 | 5 pt. Star | | | 3.00/.187 | 0 | 1 | High-Lift Xtended Fusion® — G5 |
| (3) for 50" cut | **95-018** | 137380<br>532137380<br>917137380MS<br>917137380P<br>917532137380 | **17-3/8** | 5 pt. Star | | | 2.25/.149 | 1/8 | 15/16 | |
| (3) for 50" cut, heavy-duty version of 95-018, high-lift for bagging | **95-050** | | 17-3/8 | 5 pt. Star | | | 2.25/.187 | 0 | 1 | |
| Gator® G3™ | **95-609** | | 17-3/8 | 5 pt. Star | | | 2.50/.187 | 0 | 3/4 | G3 |
| Gator G5™ | **595-609** | | 17-3/8 | 5 pt. Star | | | 3.00/.164 | 0 | 1 | High-Lift Xtended Fusion® — G5 |
| (2) for 36" cut | **95-036** | 127841<br>138496<br>532127841<br>532138496<br>917532127841<br>917532138496 | **18-3/16** | 5 pt. Star | | | 2.25/.134 | 1/8 | 1 | |
| (2) for 36" cut, heavy-duty version of 95-036 | **95-026** | | 18-3/16 | 5 pt. Star | | | 2.25/.187 | 1/8 | 1 | |

GROUP CONTINUES

B

## AYP

| | OREGON | OEM No. | Length | Center | Outer | C to C | W / T | Off | Lift | Prod. Code |
|---|---|---|---|---|---|---|---|---|---|---|
| Gator G3 | **95-613** | | 18-3/16 | 5 pt. Star | | | 2.50/.187 | 0 | 3/4 | G3 |
| Gator G5 | **595-613** | | 18-3/16 | 5 pt. Star | | | 3.00/.164 | 0 | 1 | High-Lift Xtended Fusion® G5 |
| (2) for 36" cut, high-lift | **95-034** | 120262X<br>120626X<br>126338X<br>143969<br>532126338<br>532143669<br>917126338X | **18-3/16** | 3/8 | 3/8 | 10 | 2.50/.187 | 0 | 7/8 | |
| (3) for 54" cut | **195-072** | 112053<br>187254<br>187256<br>33954<br>532187254<br>532187256<br>539112053<br>574292401<br>575938401<br>777187256 | **18-7/16** | 5 pt. Star | 5/16 | 3-15/16 | 2.75/.187 | 1/2 | 1-3/16 | Xtended 100 |
| | | | | | | | | | | 917187254<br>917532187254<br>917532187256<br>917539112053<br>917777187256 |
| (3) for 54" cut, mulching | **95-082** | 187255<br>24541<br>532187255<br>575938501<br>917532187255 | 18-7/16 | 5 pt. Star | | | 2.50/.187 | 5/16 | 13/16 | |
| Gator G3<br>(3) for 54" cut | **95-605** | | 18-7/16 | 5 pt. Star | | | 2.50/.187 | 1/2 | 3/4 | G3 |
| Gator® G5™ | **595-605** | | 18-7/16 | 5 pt. Star | | | 3.00/.164 | 1/2 | 1 | High-Lift Xtended Fusion® G5 |
| (2) for 38" cut, high-lift | **95-031** | 121263X<br>143978<br>532121263<br>532143978<br>917121263X<br>917121263XMS<br>917532121263 | **19-1/4** | 3/8 | | | 2.25/.187 | 0 | 1 | |

B

# Blades - OEM Replacements

## AYP

| | OREGON | OEM No. | Length | Center | Outer | C to C | W / T | Off | Lift | Prod. Code |
|---|---|---|---|---|---|---|---|---|---|---|
| (2) for 38" cut | **195-033** | 12784<br>127842<br>138970<br>513897001<br>531307221<br>532127842<br>532138497<br>532138970 | **19-1/4**<br><br><br><br>917127842<br>917138497MS<br>917138970<br>917532138497<br>917532138970 | 5 pt. Star | 3/8 | 3-1/8 | 2.25/.134 | 1/8 | 1-1/16 | Xtended — 100 |
| (2) for 38" cut, heavy-duty version of 195-033 | **95-038** | | 19-1/4 | 5 pt. Star | | | 2.25/.187 | 1/8 | 1-1/16 | |
| (2) for 38" cut, high-lift | **95-047** | 131322<br>532131322<br>917131322 | 19-1/4 | 5 pt. Star | | | 2.25/.187 | 0 | 1 | |
| (2) for 38" cut, mulching | **195-003** | 134148<br>134148M<br>134148X<br>138497<br>139744MS<br>139774<br>193957<br>24692<br>531307220<br>532134148<br>532139774<br>532193957 | 19-1/4<br><br><br>539110324<br>777193957<br>917134148MS<br>917134148X<br>917139774<br>917139774MS<br>917532134148<br>917532139774<br>917532193957 | 5 pt. Star | 5/16 | 3-1/8 | 2.25/.134 | 1/8 | 7/8 | Xtended — 100 |
| (2) for 38" cut, heavy-duty version of 195-003 | **95-099** | | 19-1/4 | 5 pt. Star | | | 2.25/.149 | 1/8 | 1 | |
| Gator® G3™ | **95-601** | | 19-1/4 | 5 pt. Star | | | 2.50/.187 | 0 | 3/4 | G3 |
| Gator G5™ | **595-601** | | 19-1/4 | 5 pt. Star | | | 3.00/.164 | 0 | 1 | High-Lift Xtended Fusion® — G5 |
| (2) for 38" cut | **95-015** | 100669K<br>106634X<br>25036<br>91724691 | **19-3/8** | 3/8 | | | 2.25/.187 | 0 | 1 | |
| 20" cut, walk-behind | **95-024** | 1935957<br>532850972<br>544080204<br>55139204<br>69229<br>701211<br>7133203<br>77193957<br>850972<br>8509725<br>913532193957 | **19-15/16**<br><br><br><br>917145106CS<br>917532850972<br>917532850972MS<br>91756400<br>917701211MS<br>917701211X417<br>917733203<br>917850972 | 5/8 | 3/8 | 1-7/8 | 2.50/.149 | 9/16 | 7/8 | |

GROUP CONTINUES

## AYP

| OREGON | OEM No. | Length | Center | Outer | C to C | W / T | Off | Lift | Prod. Code |
|---|---|---|---|---|---|---|---|---|---|
| | | GROUP CONTINUES | | | | | | | |
| **95-041** | | 19-15/16 | 5/8 | 3/8 | 1-7/8 | 2.50/.149 | 7/16 | 15/16 | |
| 20" cut, mulching | | | | | | | | | |
| **595-024** | | 19-15/16 | 5/8 | 3/8 | 1-7/8 | 3.00/.134 | 5/8 | 1 | |
| Gator G5 | | | | | | High-Lift Xtended Fusion® | | | G5 |
| **95-051** | 133346<br>134871<br>145106<br>532129277<br>532133346<br>532134871<br>532145106<br>532700972<br>532751646<br>575164601<br>751646 | **20**<br><br><br><br>917129277<br>917131694<br>917145106CS<br>917532129277<br>917532751646<br>917700972<br>917751646 | 5/8 | 3/8 | 1-7/8 | 2.25/.134 | 7/16 | 11/16 | |
| 20" cut, walk-behind, mulching | | | | | | | | | |
| **95-044** | 204114-884<br>204340218<br>340218<br>531307212<br>532114884 | 20<br><br><br>532752233<br>752233<br>917532752233 | 5/8 | 3/8 | 1-7/8 | 2.00/.134 | 5/16 | 13/16 | |
| 20" cut, walk-behind, mulching | | | | | | | | | |
| **195-032** | 127843<br>138498<br>138791<br>138971<br>531307224<br>532138498<br>532138971<br>917127843<br>917131323<br>917138498MS<br>917532138498 | **21** | 5 pt. Star | | | 2.25/.149 | 1/8 | 1-1/16 | |
| (2) for 42" cut | | | | | | Xtended | | | 100 |
| **195-039** | | 21 | 5 pt. Star | 5/16 | 3-1/8 | 2.25/.187 | 1/8 | 1-1/18 | |
| (2) for 42" cut, heavy-duty version of 195-032 | | | | | | Xtended | | | 100 |
| **195-048** | 532131323 | 21 | 5 pt. Star | 5/16 | 3-1/8 | 2.25/.187 | 0 | 3/4 | |
| (2) for 42" cut, sand | | | | | | Xtended | | | 100 |
| **195-005** | 134149<br>24676<br>422719<br>424752<br>531005085<br>531307223<br>532134149<br>532422719<br>532424752<br>539110460 | 21<br><br><br>777134149<br>91724676<br>917532422719<br>917532424752<br>917539110460<br>917777134149<br>954636867 | 5 pt. Star | | | 2.25/.134 | 1/8 | 7/8 | |
| (2) for 42" cut, mulching | | | | | | Xtended | | | 100 |

GROUP CONTINUES

# Blades - OEM Replacements

## AYP

| | OREGON | OEM No. | Length | Center | Outer | C to C | W / T | Off | Lift | Prod. Code |
|---|---|---|---|---|---|---|---|---|---|---|
| (2) for 42" cut, heavy-duty version of 195-005 | **195-019** | 139775<br>532139775<br>917139775P<br>917532139775 | 21 | 5 pt. Star | | | 2.25/.149 | 1/8 | 15/16 | Xtended 100 |
| (2) for 42" cut | **95-086** | | 21 | 5 pt. Star | | | 2.50/.203 | 0 | 1.000 | |
| Gator® G3™ | **96-900** | 521981601 | 21 | 5 pt. Star | | | 2.50/.187 | 0 | 3/4 | G3 |
| Gator G5™ | **596-900** | | 21 | 5 pt. Star | | | 3.00/.164 | 0 | 1 | High-Lift Xtended Fusion® G5 |
| 21" cut, walk-behind | **95-071** | 159267<br>531307235<br>532159267<br>917532159267 | **21** | 5/8 | 3/8 | 1-7/8 | 2.75/.134 | 1/2 | 1-1/8 | |
| 21" cut, walk-behind, mulching | **195-067** | 189028<br>531300765<br>532189028<br>539111878 | 21 | 5/8 | 3/8 | 1-7/8 | 2.25/.134 | 9/16 | 1-1/16 | Xtended 100 |
| 21" cut, walk-behind | **95-057** | 165833<br>175064<br>406706<br>406712<br>532165833<br>532175064<br>532176135<br>532406712<br>917175064 | 21 | 5/8 | 3/8 | 1-7/8 | 2.75/.134 | 1/2 | 1-9/16 | 917175064PB<br>917176135<br>917532165833<br>917532175064<br>917532176135 |
| Gator G3 | **95-621** | 580258101<br>580258102 | 21 | 5/8 | 3/8 | 1-7/8 | 2.50/.187 | 1/2 | 3/4 | G3 |
| Gator G5 | **595-621** | | 21 | 5/8 | 3/8 | 1-7/8 | 3.00/.149 | 1/2 | 1 | High-Lift Xtended Fusion® G5 |
| 22" cut, walk-behind | **95-023** | 406713<br>532406713<br>532850973<br>701213<br>7133219<br>850973<br>91733219<br>917532406713 | **21-3/4** | 5/8 | 3/8 | 1-7/8 | 2.50/.149 | 9/16 | 7/8 | 917532850973<br>91756401<br>917701213<br>917701213MS<br>917850973<br>917850973MS |

GROUP CONTINUES

## AYP

| OREGON | OEM No. | Length | Center | Outer | C to C | W / T | Off | Lift | Prod. Code |
|---|---|---|---|---|---|---|---|---|---|
| GROUP CONTINUES | | | | | | | | | |
| **95-042** | | 21-3/4 | 5/8 | 3/8 | 1-7/8 | 2.50/.149 | 7/16 | 15/16 | |
| 22" cut, walk-behind, mulching | | | | | | | | | |
| **195-021** | 33256<br>133348<br>134768<br>141114<br>152202<br>157101<br>700973<br>752234<br>7133269<br>91733256<br>91733269 | 21-3/4<br><br>204335256<br>531301252<br>531307214<br>531307236<br>531307237<br>532134768<br>532141114<br>532152202<br>532752234 | 5/8 | 3/8<br><br>575157101<br>917157101<br>917752234<br>917532134768<br>917532141114<br>917532752234 | 1-7/8 | 2.25/.134 | 1/2 | 15/16 | Xtended — 100 |
| 22" cut, walk-behind, mulching | | | | | | | | | |
| **95-073** | 192682<br>406707<br>532192682<br>532406707<br>582931401<br>917192682<br>917192682X431<br>917532192682<br>917532406707 | 21-3/4 | 5/8 | 3/8 | 1-7/8 | 2.25/.134 | 9/16 | 1-3/16 | |
| Used on PR6252SH, 961240001 | | | | | | | | | |
| **95-602** | | 21-3/4 | 5/8 | 3/8 | 1-7/8 | 2.50/.187 | 1/2 | 3/4 | G3 |
| Gator® G3™ | | | | | | | | | |
| **595-602** | | 21-3/4 | 5/8 | 3/8 | 1-7/8 | 3.00/.149 | 1/2 | 1 | High-Lift Xtended Fusion® — G5 |
| Gator G5™ | | | | | | | | | |
| **95-076** | 420463<br>421825<br>532420463<br>532421825<br>532437601<br>917532420463<br>917532421825 | **21-15/16** | 5 pt. Star | | | 2.25/.134 | 9/16 | 13/16 | |
| (1) for 22" cut, walk-behind mower | | | | | | | | | |
| **95-615** | 580244001<br>585587701 | 21-15/16 | 5 pt. Star | | | 2.25/.134 | 9/16 | 3/4 | G3 |
| Gator G3 | | | | | | | | | |
| **195-070** | 405380<br>532405380<br>575937901<br>777405380<br>917532405380<br>917777405380 | **22-7/8** | 5 pt. Star | 5/16 | 3-15/16 | 2.75/.164 | 5/16 | 1-1/8 | Xtended — 100 |
| (2) for 46" cut, high-lift, YTH2546, YTH2146XP, 2246LS, 2346XLS, Poulan 19546LT. | | | | | | | | | |
| **95-370** | | 22-7/8 | 5 pt. Star | | | 2.50/.203 | 5/16 | 1-1/4 | Xtended |
| (2) for 46" cut, heavy-duty | | | | | | | | | |
| GROUP CONTINUES | | | | | | | | | |

# Blades - OEM Replacements

## AYP

GROUP CONTINUES

| | OREGON | OEM No. | Length | Center | Outer | C to C | W / T | Off | Lift | Prod. Code |
|---|---|---|---|---|---|---|---|---|---|---|
| (2) for 46" cut, mulching | **95-074** | 403107<br>531309715<br>532403107<br>917532403107 | 22-7/8 | 5 pt. Star | | | 2.25/.149 | 1/8 | 15/16 | Xtended |
| Gator® G3™ | **96-370** | | 22-7/8 | 5 pt. Star | | | 2.75/.187 | 1/4 | 3/4 | Xtended G3 |
| Gator G5™ | **596-370** | | 22-7/8 | 5 pt. Star | | | 3.00/.187 | 5/16 | 1 | High-Lift Xtended Fusion® G5 |
| Gator G5, LT2213C, LT2213CA, LZ11577, LZ1577HRB, LZ1577RB, PO12530LT, PXT12530 | **595-807** | 419273<br>419273X431<br>419274<br>532419273<br>532419274<br>777419274<br>917532419273<br>91777419274 | **29-5/8** | 5 pt. Star | | | 3.00/.149 | 5/16 | 1 | High-Lift Xtended Fusion® G5 |

## Befco

| | | | | | | | | | | |
|---|---|---|---|---|---|---|---|---|---|---|
| (3) for 48" cut | **92-300** | 000-6795 | **16-5/8** | 3/4 | | | 2.50/.250 | 11/16 | 1-1/8 | |
| Gator G6® | **392-300** | | 16-5/8 | 3/4 | | | 3.00/.250 | 5/8 | 1 | Heavy-Duty High-Lift Xtended Fusion® G6 |
| (3) for 60" cut | **92-301** | 000-6641 | **20-3/16** | 3/4 | | | 2.50/.250 | 11/16 | 1-1/8 | |
| Gator G6 | **392-301** | | 20-3/16 | 3/4 | | | 3.00/.250 | 5/8 | 1 | Heavy-Duty High-Lift Xtended Fusion® G6 |
| (3) for 72" cut, Cyclone, 112-EZF, 115-EZF, 212, 215, 217, 312, 315, 317-FLX, 412, 415, 417-SFL, 716 | **92-133** | 000-6845 | **24-9/16** | 3/4 | | | 2.50/.250 | 11/16 | 1-1/8 | |
| Gator G6 | **392-133** | | 24-9/16 | 3/4 | | | 3.00/.250 | 5/8 | 1 | Heavy-Duty High-Lift Xtended Fusion® G6 |
| (3) for 84" cut | **92-302** | 000-6690 | **28-9/16** | 3/4 | | | 2.50/.250 | 11/16 | 1-1/8 | |
| Gator G6 | **392-302** | 000-6690 | 28-9/16 | 3/4 | | | 3.00/.250 | 5/8 | 1 | Heavy-Duty High-Lift Xtended Fusion® G6 |

B

## Better Outdoors

| | OREGON | OEM No. | Length | Center | Outer | C to C | W / T | Off | Lift | Prod. Code |
|---|---|---|---|---|---|---|---|---|---|---|
| (3) for 44" cut | **91-369** | 10480-S | **15-1/4** | 5/8 | | | 2.50/.203 | 0 | 1 | |
| | | | | | | | Xtended | | | |
| (3) for 44" cut, mulching | **91-373** | | 15-1/4 | 5/8 | | | 2.50/.203 | 0 | 1 | |
| | | | | | | | Xtended | | | |
| Gator® G3™ | **96-327** | | 15-1/4 | 5/8 | | | 2.50/.203 | 0 | 1 | |
| | | | | | | | Xtended | | | G3 |
| Gator G5™ | **596-327** | | 15-1/4 | 5/8 | | | 3.00/.203 | 0 | 1 | |
| | | | | | | | High-Lift Xtended Fusion® | | | G5 |
| (2) for 32" cut | **91-313** | 10661-S | **16-1/4** | 5/8 | | | 2.50/.203 | 0 | 1 | |
| (2) for 32" cut | **91-180** | | 16-1/4 | 5/8 | | | 2.50/.187 | 0 | 1 | |
| (2) for 32" cut, heavy-duty | **91-183** | | 16-1/4 | 5/8 | | | 2.50/.250 | 0 | 1 | |
| (2) for 32" cut | **99-127** | | 16-1/4 | 5/8 | | | 2.50/.203 | 0 | 1-1/16 | |
| (2) for 32" cut, mulching | **91-368** | | 16-1/4 | 5/8 | | | 2.50/.203 | 0 | 1 | |
| | | | | | | | Xtended | | | |
| Gator G3 | **96-310** | ACC-0022 | 16-1/4 | 5/8 | | | 2.50/.203 | 0 | 3/4 | |
| | | | | | | | | | | G3 |
| Gator G5 | **596-310** | | 16-1/4 | 5/8 | | | 3.00/.203 | 0 | 1 | |
| | | | | | | | High-Lift Xtended Fusion® | | | G5 |
| Gator G6® | **396-716** | | 16-1/4 | 5/8 | | | 3.00/.250 | 0 | 1 | |
| | | | | | | | Heavy-Duty High-Lift Xtended Fusion® | | | G6 |

B

# Blades - OEM Replacements

## Big Bee

| | OREGON | OEM No. | Length | Center | Outer | C to C | W / T | Off | Lift | Prod. Code |
|---|---|---|---|---|---|---|---|---|---|---|
| (3) for 60" cut, left-hand cut | **91-046** | A-19B20<br>FM04-2A | **20-3/16** | 1/2 | | | 2.50/.250 | 1/2 | 15/16 | |
| (3) for 72" cut, left-hand cut | **91-047** | A-19B25<br>FM04-3A | **25-3/16** | 1/2 | | | 2.50/.250 | 1/2 | 15/16 | |

## Bobcat

| | | | | | | | | | | |
|---|---|---|---|---|---|---|---|---|---|---|
| (2) for 32" cut, (3) for 48" cut | **93-005** | 03239<br>32061<br>3239<br>WM132061<br>WMTA3206<br>WMTA32061 | **16-1/4** | 5/8 | 1/4 | 1-5/8 | 2.50/.250 | 0 | 1-3/16 | |
| (2) for 32" cut, (3) for 48" cut | **91-313** | | 16-1/4 | 5/8 | | | 2.50/.203 | 0 | 1 | |
| (2) for 32" cut, (3) for 48" cut | **91-180** | | 16-1/4 | 5/8 | | | 2.50/.187 | 0 | 1 | |
| (2) for 32" cut, (3) for 48" cut | **99-127** | | 16-1/4 | 5/8 | | | 2.50/.203 | 0 | 1-1/16 | |
| (2) for 32" cut, (3) for 48" cut, mulching | **91-368** | | 16-1/4 | 5/8 | | | 2.50/.203 | 0 | 1 | Xtended |
| Gator® G3™ | **96-310** | | 16-1/4 | 5/8 | | | 2.50/.203 | 0 | 3/4 | |
| Gator G5™ | **596-310** | | 16-1/4 | 5/8 | | | 3.00/.203 | 0 | 1 | High-Lift Xtended Fusion® G5 |
| Gator G6® | **396-716** | | 16-1/4 | 5/8 | | | 3.00/.250 | 0 | 1 | Heavy-Duty High-Lift Xtended Fusion® G6 |

GROUP CONTINUES

## Bobcat

| | OREGON | OEM No. | Length | Center | Outer | C to C | W / T | Off | Lift | Prod. Code |
|---|---|---|---|---|---|---|---|---|---|---|
| | | | GROUP CONTINUES | | | | | | | |
| (2) for 32" cut, (3) for 48" cut, high-lift use on XM series | **93-009** | 112111-01 | 16-1/4 | 5/8 | | | 2.50/.203 | 1/2 | 1-1/8 | |
| Gator G5 | **593-600** | | 16-1/4 | 5/8 | | | 3.00/.203 | 1/2 | 1 | High-Lift Xtended Fusion® G5 |
| (2) for 36" cut, (3) for 54" cut, heavy-duty | **93-006** | 32022<br>32022A<br>32022HD<br>WM132022 | **18** | 5/8 | 1/4 | 1-5/8 | 2.50/.250 | 0 | 1-3/16 | Xtended |
| (2) for 36" cut, (3) for 54" cut | **91-622** | | 18 | 5/8 | | | 2.50/.203 | 0 | 1 | Xtended |
| (2) for 36" cut, (3) for 54" cut, high-lift | **91-623** | | 18 | 5/8 | | | 3.00/.203 | 0 | 1-1/2 | Xtended |
| (2) for 36" cut, (3) for 54" cut, low-lift | **91-235** | | 18 | 5/8 | | | 2.50/.250 | 0 | 7/8 | Xtended |
| (2) for 36" cut, (3) for 54" cut | **91-181** | | 18 | 5/8 | | | 2.50/.187 | 0 | 1 | Xtended |
| (2) for 36" cut, (3) for 54" cut | **91-184** | | 18 | 5/8 | | | 2.50/.250 | 0 | 1 | Xtended |
| (2) for 36" cut, (3) for 54" cut | **91-256** | | 18 | 5/8 | | | 2.50/.203 | 0 | 1 | Xtended |
| (2) for 36" cut, (3) for 54" cut | **91-312** | | 18 | 5/8 | | | 2.50/.203 | 0 | 1 | Xtended |
| | | | GROUP CONTINUES | | | | | | | |

B

# Blades - OEM Replacements

## Bobcat

| | OREGON | OEM No. | Length | Center | Outer | C to C | W / T | Off | Lift | Prod. Code |
|---|---|---|---|---|---|---|---|---|---|---|
| | | | GROUP CONTINUES | | | | | | | |
| (2) for 36" cut, (3) for 54" cut | **91-637** | | 18 | 5/8 | | | 2.50/.203 | 0 | 1 | |
| (2) for 36" cut, (3) for 54" cut | **94-053** | | 18 | 5/8 | | | 2.50/.250 | 0 | 1 | |
| (2) for 36" cut, (3) for 54" cut, mulching | **91-335** | | 18 | 5/8 | | | 2.50/.203 | 0 | 1 | Xtended |
| (2) for 36" cut, (3) for 54" cut, mulching | **91-218** | | 18 | 5/8 | | | 2.50/.164 | 0 | 1 | Xtended |
| Gator® G3™ | **96-344** | | 18 | 5/8 | | | 2.50/.203 | 0 | 3/4 | G3 |
| Gator G5™ | **596-344** | | 18 | 5/8 | | | 3.00/.203 | 0 | 1 | High-Lift Xtended Fusion® G5 |
| Gator G6® | **396-726** | | 18 | 5/8 | | | 3.00/.250 | 0 | 1 | Heavy-Duty High-Lift Xtended Fusion® G6 |
| (2) for 36" cut, high-lift, use on XM series | **93-010** | 112111-02 | **18** | 5/8 | | | 2.50/.203 | 1/2 | 1-1/8 | Xtended |
| (3) for 52" cut, (2) for 36" cut, use on XM series | **91-039** | | 18 | 5/8 | | | 2.50/.203 | 1/2 | 1 | |
| Gator G3 | **93-601** | 272254302 | 18 | 5/8 | | | 2.50/.203 | 1/2 | 3/4 | G3 |
| Gator G5 | **593-601** | | 18 | 5/8 | | | 3.00/.203 | 1/2 | 1 | High-Lift Xtended Fusion® G5 |
| Gator G6 | **393-601** | | 18 | 5/8 | | | 3.00/.250 | 1/2 | 1 | Heavy-Duty High-Lift Xtended Fusion® G6 |
| (3) for 61" cut | **93-008** | 42180B<br>WM142180B | **21** | 5/8 | 1/4 | 1-5/8 | 2.50/.250 | 0 | 1-3/16 | Xtended |
| (3) for 61" cut | **91-626** | | 21 | 5/8 | | | 2.50/.203 | 0 | 1 | |

GROUP CONTINUES

B

## Bobcat

| | OREGON | OEM No. | Length | Center | Outer | C to C | W / T | Off | Lift | Prod. Code |
|---|---|---|---|---|---|---|---|---|---|---|
| | | | GROUP CONTINUES | | | | | | | |
| (3) for 61" cut | 91-209 | | 21 | 5/8 | | | 2.50/.250 | 0 | 1 | |
| | | | | | | | Xtended | | | |
| (3) for 61" cut | 91-638 | | 21 | 5/8 | | | 2.50/.203 | 0 | 1 | |
| (3) for 61" cut, high-lift | 91-628 | | 21 | 5/8 | | | 3.00/.203 | 0 | 1-1/2 | |
| | | | | | | | Xtended | | | |
| (3) for 61" cut, mulching | 91-596 | | 21 | 5/8 | | | 2.50/.203 | 0 | 1 | |
| (3) for 61" cut | 91-308 | | 21 | 5/8 | | | 2.50/.203 | 0 | 1 | |
| (3) for 61" cut | 95-078 | | 21 | 5/8 | | | 2.50/.250 | 0 | 1 | |
| Gator® G3™ | 96-347 | | 21 | 5/8 | | | 2.50/.203 | 0 | 3/4 | G3 |
| Gator G5™ | 596-347 | | 21 | 5/8 | | | 3.00/.203 | 0 | 1 | |
| | | | | | | | High-Lift Xtended Fusion® | | | G5 |
| Gator G6® | 396-727 | | 21 | 5/8 | | | 3.00/.250 | 0 | 1 | |
| | | | | | | | Heavy-Duty High-Lift Xtended Fusion® | | | G6 |
| (3) for 61" cut, high-lift, 226ES, Fastcut, FR691V, Preditor Pro, Procut, ZT200, ZT219, ZT220, ZT223, ZT225, ZT226, ZT227, ZT228, ZT231 | 93-011 | 112111-03 | **21** | 5/8 | | | 2.50/.250 | 1/2 | 1-1/8 | |
| | | | | | | | Xtended | | | |
| (3) for 61" cut, 226ES, Fastcut, FR691V, Preditor Pro, Procut, ZT200, ZT219, ZT220, ZT223, ZT225, ZT226, ZT227, ZT228, ZT231 | 93-013 | 112243-03 | 21 | 5/8 | | | 2.50/.250 | 1/2 | 5/8 | |
| | | | | | | | Xtended | | | |
| (3) for 61" cut | 91-135 | | 21 | 5/8 | | | 2.50/.203 | 1/2 | 1 | |
| Gator G3 | 96-702 | 2722453-03 | 21 | 5/8 | | | 2.50/.203 | 1/2 | 1 | G3 |
| | GROUP CONTINUES | | | | | | | | | |

# Blades - OEM Replacements

## Bobcat

| | OREGON | OEM No. | Length | Center | Outer | C to C | W / T | Off | Lift | Prod. Code |
|---|---|---|---|---|---|---|---|---|---|---|
| | | | GROUP CONTINUES | | | | | | | |
| Gator® G5™ | **596-702** | | 21 | 5/8 | | | 3.00/.203 | 1/2 | 1 | G5 (High-Lift Xtended Fusion®) |
| Gator G6® | **396-702** | | 21 | 5/8 | | | 3.00/.250 | 1/2 | 1 | G6 (Heavy-Duty High-Lift Xtended Fusion®) |
| Gator G6 (3) for 72" cut | **393-026** | 112111-07 | **24-1/2** | 5/8 | | | 3.00/.250 | 7/16 | 1 | G6 (Heavy-Duty High-Lift Xtended Fusion®) |
| (3) for 74" cut | **93-025** | 112111-04 | **24-15/16** | 5/8 | | | 2.50/.250 | 1/2 | 1-1/4 | |
| (3) for 72" cut | **91-609** | | **25** | 5/8 | | | 2.50/.250 | 0 | 1 | |
| Gator G6 | **396-731** | 42139B<br>WM142139B | 25 | 5/8 | | | 3.00/.250 | 0 | 1 | G6 (Heavy-Duty High-Lift Xtended Fusion®) |

## Bolens (also see MTD)

| | | | | | | | | | | |
|---|---|---|---|---|---|---|---|---|---|---|
| (1) 98-061 & (2) 198-063 for 46" cut - star center hole, center blade, 3 in 1 mulching | **98-061** | 742-0612<br>742-0612A<br>942-0612<br>942-0612A | **14-7/8** | 5/8<br>6 pt. Star | | | 2.50/.149 | 7/16 | 1-3/16 | Xtended |
| (1) 98-084 & (2) 98-085 for 46" cut | **98-084** | | 14-7/8 | 5/8<br>6 pt. Star | | | 2.50/.203 | 7/16 | 1-1/8 | Xtended |
| Gator G3™ | **98-637** | 742-04049<br>742-04124-X<br>742-0612-X<br>942-04124-X<br>942-0612-X | 14-7/8 | 5/8<br>6 pt. Star | | | 2.50/.187 | 7/16 | 3/4 | G3 |
| (3) for 42" cut, fits models #18300, 30042 & 30042S | **91-097** | 172-7926<br>177-2144 | **15-5/16** | 3/8 | 3/8 | 2-3/4 | 2.00/.187 | 0 | 1 | |
| (2) 198-063 & (1) 98-061 for 46" cut - star center hole, outside blades, 3 in 1 mulching | **198-063** | 742-0611<br>742-0611A<br>942-0611<br>942-0611A | **16-1/4** | 5/8<br>6 pt. Star | | | 2.50/.149 | 7/16 | 1-1/8 | Xtended — 100 |

GROUP CONTINUES

## Bolens (also see MTD)

| | OREGON | OEM No. | Length | Center | Outer | C to C | W / T | Off | Lift | Prod. Code |
|---|---|---|---|---|---|---|---|---|---|---|
| (2)98-085 & (1) 98-084 for 46" cut, outside blades | **98-085** | | 16-1/4 | 5/8 6 pt. Star | | | 2.50/.203 | 7/16 | 1-1/8 | Xtended |
| Gator® G3™ | **98-640** | 742-04043<br>742-04125-X<br>742-0611-X<br>942-04125-X | 16-1/4 | 5/8 6 pt. Star | | | 2.50/.187 | 7/16 | 3/4 | G3 |
| Gator G5™ | **598-640** | | 16-1/4 | 5/8 6 pt. Star | | | 3.00/.164 | 7/16 | 1 | High-Lift Xtended Fusion® G5 |
| (3) for 48" cut, fits models # 30048S, 30048E, 18336, 19211 | **91-096** | 173-0412<br>173-8571<br>177-2145 | **16-15/16** | 3/8 | 3/8 | 2-3/4 | 2.00/.187 | 0 | 1 | |
| (1) for 36" cut, left-hand side, use with deluxe grass catcher | **91-714** | 174-8302 | **18-1/2** | 3/4 | 3/8 | 2-9/16 | 2.50/.164 | 0 | 1-5/16 | |
| (3) for 54" cut, 18110, 19212 | **91-093** | 172-2883<br>172-5522 | **18-3/4** | 3/8 | 3/8 | 2-3/4 | 2.00/.187 | 0 | 1 | |
| (2) for 38" cut, star center hole, mulching, MTD 3-in-1 blade | **198-058** | 742-0610<br>742-0610A<br>742-0610A-0637<br>942-0610<br>942-0610A<br>GW-7420610<br>OEM-742-0610 | **19-5/16** | 5/8 6 pt. Star | | | 2.75/.149 | 3/8 | 1-1/2 | Xtended 100 |
| (2) for 38" cut, use in place of our 198-058 for non-mulching | **198-052** | 742-0654<br>942-0654 | 19-5/16 | 5/8 6 pt. Star | | | 3.00/.149 | 5/16 | 1-1/4 | Xtended 100 |
| Gator G3 | **98-628** | | 19-5/16 | 5/8 6 pt. Star | | | 2.50/.187 | 5/16 | 3/4 | G3 |
| Gator G5 | **598-628** | | 19-5/16 | 5/8 6 pt. Star | | | 3.00/.164 | 5/16 | 1 | High-Lift Xtended Fusion® G5 |
| 20" cut, walk-behind, high-lift | **98-068** | 742-0640<br>942-0640 | **20** | bow-tie | 5/16 | 2-1/2 | 2.25/.134 | 5/16 | 13/16 | |
| 20" cut, walk-behind, mulcher | **98-066** | 742-0740<br>942-0740 | 20 | bow-tie | 5/16 | 2-1/2 | 2.25/.134 | 5/16 | 1-1/8 | |

GROUP CONTINUES

# Blades - OEM Replacements

## Bolens (also see MTD)

| | OREGON | OEM No. | Length | Center | Outer | C to C | W / T | Off | Lift | Prod. Code |
|---|---|---|---|---|---|---|---|---|---|---|
| 21" cut, walk-behind, mulcher | 198-049 | 742-0741<br>942-0741<br>942-0741A | 21 | bow-tie | 5/16 | 2-1/2 | 2.25/.134 | 1/4 | 15/16 | Xtended 100 |
| Gator® G3™ | 98-631 | | 21 | bow-tie | 5/16 | 2-1/2 | 2.50/.187 | 5/16 | 3/4 | G3 |
| Gator G5™ | 598-631 | | 21 | bow-tie | 5/16 | 2-1/2 | 3.00/.149 | 5/16 | 1 | High-Lift Xtended Fusion® G5 |
| (2) for 42" cut, star center hole, mulching, deep deck - 1997 & after; autodrive 1999 & after | 198-059 | 742-0616<br>742-0616A<br>942-0616<br>942-0616A<br>OEM-742-0616 | 21-3/16 | 5/8<br>6 pt. Star | | | 2.75/.149 | 3/8 | 1-1/2 | Xtended 100 |
| (2) for 42" cut, star center hole, use in place of 198-059 for non-mulching | 198-153 | | 21-3/16 | 5/8<br>6 pt. Star | | | 3.00/.149 | 5/16 | 1-1/4 | Xtended 100 |
| (2) for 42" cut, star center hole, deep deck - 1997 & after; autodrive 1999 & after | 98-093 | | 21-3/16 | 5/8<br>6 pt. Star | | | 2.75/.149 | 3/8 | 7/8 | |
| Gator G3 | 98-629 | | 21-3/16 | 5/8<br>6 pt. Star | | | 2.50/.187 | 5/16 | 3/4 | G3 |
| Gator G5 | 598-629 | | 21-3/16 | 5/8<br>6 pt. Star | | | 3.00/.164 | 5/16 | 1 | High-Lift Xtended Fusion® G5 |

## Bunton-Goodall

| | OREGON | OEM No. | Length | Center | Outer | C to C | W / T | Off | Lift | Prod. Code |
|---|---|---|---|---|---|---|---|---|---|---|
| (3) for 48" cut | 91-620 | | 16-1/2 | 5/8 | | | 2.50/.203 | 0 | 1 | Xtended |
| (3) for 48" cut, high-lift | 91-621 | | 16-1/2 | 5/8 | | | 3.00/.203 | 0 | 1-1/2 | |
| (2) for 32" cut, (3) for 48" cut | 92-145 | | 16-1/2 | 5/8 | | | 2.50/.203 | 0 | 1 | |
| Gator® G3™ | 96-308 | | 16-1/2 | 5/8 | | | 2.50/.203 | 0 | 1 | G3 |
| Gator G5™ | 596-308 | | 16-1/2 | 5/8 | | | 3.00/.203 | 0 | 1 | High-Lift Xtended Fusion® G5 |

GROUP CONTINUES

## Bunton-Goodall

| | OREGON | OEM No. | Length | Center | Outer | C to C | W / T | Off | Lift | Prod. Code |
|---|---|---|---|---|---|---|---|---|---|---|
| | | | GROUP CONTINUES | | | | | | | |
| Gator G6® — (3) for 48" cut V series deck | **396-735** | PL4205 | 16-1/2 | 5/8 | | | 3.00/.250 | 0 | 1 | G6 (Heavy-Duty High-Lift Xtended Fusion®) |
| (3) for 50" cut, ZTR, high-lift | **91-505** | PL7329 | **17** | 5/8 | | | 2.50/.250 | 0 | 1-1/8 | Xtended |
| (3) for 50" cut | **91-502** | | 17 | 5/8 | | | 2.50/.203 | 0 | 1-3/16 | Xtended |
| (3) for 50" cut | **91-508** | | 17 | 5/8 | | | 2.50/.250 | 0 | 1-3/16 | Xtended |
| Gator G3 | **96-323** | | 17 | 5/8 | | | 2.50/.203 | 0 | 1 | G3 |
| Gator G5 | **596-323** | | 17 | 5/8 | | | 3.00/.203 | 0 | 1 | G5 (High-Lift Xtended Fusion®) |
| Gator G6 | **396-723** | | 17 | 5/8 | | | 3.00/.250 | 0 | 1 | G6 (Heavy-Duty High-Lift Xtended Fusion®) |
| (3) for 52" cut, (2) for 36" cut | **91-256** | PL4206 | **18** | 5/8 | | | 2.50/.203 | 0 | 1 | Xtended |
| (3) for 52" cut, (2) for 36" cut | **91-622** | | 18 | 5/8 | | | 2.50/.203 | 0 | 1 | Xtended |
| (3) for 52" cut, (2) for 36" cut | **91-637** | | 18 | 5/8 | | | 2.50/.203 | 0 | 1 | |
| (3) for 52" cut, (2) for 36" cut, high-lift | **91-623** | | 18 | 5/8 | | | 3.00/.203 | 0 | 1-1/2 | Xtended |
| Gator® G3™ | **96-344** | | 18 | 5/8 | | | 2.50/.203 | 0 | 3/4 | G3 |
| Gator G5™ | **596-344** | | 18 | 5/8 | | | 3.00/.203 | 0 | 1 | G5 (High-Lift Xtended Fusion®) |
| Gator G6® | **396-726** | | 18 | 5/8 | | | 3.00/.250 | 0 | 1 | G6 (Heavy-Duty High-Lift Xtended Fusion®) |

B

# Blades - OEM Replacements

## Bunton-Goodall

| | OREGON | OEM No. | Length | Center | Outer | C to C | W / T | Off | Lift | Prod. Code |
|---|---|---|---|---|---|---|---|---|---|---|
| (3) for 60" cut, ZTR, high-lift | **91-506** | PL7441 | **20-1/2** | 5/8 | | | 2.50/.250 | 0 | 1-3/16 | |
| | | | | | | | Xtended | | | |
| (3) for 60" cut | **92-037** | | 20-1/2 | 5/8 | | | 2.50/.203 | 0 | 1-1/16 | |
| | | | | | | | Xtended | | | |
| (3) for 60" cut, low-lift | **92-038** | | 20-1/2 | 5/8 | | | 2.50/.203 | 0 | 13/16 | |
| | | | | | | | Xtended | | | |
| (3) for 60" cut, mulching | **91-311** | | 20-1/2 | 5/8 | | | 2.50/.203 | 0 | 1 | |
| | | | | | | | Xtended | | | |
| Gator G3 | **96-319** | | 20-1/2 | 5/8 | | | 2.50/.203 | 0 | 3/4 | G3 |
| Gator® G5™ | **596-319** | | 20-1/2 | 5/8 | | | 3.00/.203 | 0 | 1 | |
| | | | | | | | High-Lift Xtended Fusion® | | | G5 |
| Gator G6® | **396-740** | | 20-1/2 | 5/8 | | | 3.00/.250 | 0 | 1 | |
| | | | | | | | Heavy-Duty High-Lift Xtended Fusion® | | | G6 |

## Bush Hog

| | OREGON | OEM No. | Length | Center | Outer | C to C | W / T | Off | Lift | Prod. Code |
|---|---|---|---|---|---|---|---|---|---|---|
| (3) for 44" cut | **92-142** | | **15-1/8** | 1/2 | | | 2.50/.203 | 0 | 1 | |
| Gator G6 | **392-142** | 50056493 | 15-1/8 | 1/2 | | | 3.00/.250 | 0 | 1 | |
| | | | | | | | Heavy-Duty High-Lift Xtended Fusion® | | | G6 |
| (2) for 36" cut, (3) for 52" cut, ES2052B2, ES2052H2, ES2052K2, HS1736B, HS1836B, HS2036K | **92-135** | 50056498 | **18** | 1/2 | | | 2.50/.203 | 0 | 1 | |
| (3) for 54" & 55" cut, CZ2355, ZT18, ZT180, ZT22, ZT22-W, ZT220, ZT230, ZT25, ZT250, ZT30-D | **92-149** | 50034306<br>50056494 | **19** | 1/2 | | | 2.50/.250 | 0 | 1-1/4 | |
| | | | | | | | Xtended | | | |

B

## Bush Hog

| | OREGON | OEM No. | Length | Center | Outer | C to C | W / T | Off | Lift | Prod. Code |
|---|---|---|---|---|---|---|---|---|---|---|
| (3) for 60" cut, fits models ATH, FTH | **91-035** | 88668 | **21** | 1/2 | | | 2.50/.250 | 1/4 | 1-1/4 | Xtended |
| (3) for 60" cut, fits models ATH, FTH | **91-531** | | 21 | 1/2 | | | 2.50/.250 | 5/16 | 1 | |
| (3) for 60" cut, fits models ATH, FTH | **91-534** | | 21 | 1/2 | | | 2.50/.250 | 5/16 | 1-3/16 | |
| (3) for 60" cut, high-lift fits models ATH, FTH | **91-537** | | 21 | 1/2 | | | 3.00/.250 | 5/16 | 1-1/4 | |
| (3) for 60" cut, low-lift fits models ATH, FTH | **91-547** | | 21 | 1/2 | | | 2.50/.250 | 5/16 | 3/4 | |
| Gator® G3™ | **96-346** | | 21 | 1/2 | | | 2.50/.203 | 5/16 | 1 | G3 |
| Gator G5™ | **596-346** | | 21 | 1/2 | | | 3.00/.203 | 5/16 | 1 | High-Lift Xtended Fusion® G5 |
| Gator G6® | **396-712** | | 21 | 1/2 | | | 3.00/.250 | 5/16 | 1 | Heavy-Duty High-Lift Xtended Fusion® G6 |
| (3) for 60" & 61" cut, CZ2561, ERM, FTH, RDTH, TH, M2260, M2360, M2560, M2560K, M2261 M2361, M2561, M2561K, PZ2761KH3, PZ3061KH3 | **91-071** | 82324 | **21** | 1/2 | | | 2.25/.250 | 0 | 1 | |
| (3) for 60" & 61" cut, CZ2561, ERM, FTH, RDTH, TH, M2260, M2360, M2560, M2560K, M2261 M2361, M2561, M2561K, PZ2761KH3, PZ3061KH3 | **92-134** | 50056493 | 21 | 1/2 | | | 2.50/.250 | 0 | 1-1/4 | Xtended |
| (3) for 60" & 61" cut, mulching, CZ2561, ERM, FTH, RDTH, TH, M2260, M2360, M2560, M2560K, M2261 M2361, M2561, M2561K, PZ2761KH3, PZ3061KH3 | **91-539** | | 21 | 1/2 | | | 2.50/.203 | 0 | 1 | |
| Gator G5 | **596-629** | 50029159<br>50034299<br>50055707<br>95754 | 21 | 1/2 | | | 3.00/.203 | 0 | 1 | High-Lift Xtended Fusion® G5 |
| Gator G6 | **396-629** | | 21 | 1/2 | | | 3.00/.250 | 0 | 1 | Heavy-Duty High-Lift Xtended Fusion® G6 |

B

# Blades - OEM Replacements

## Bush Hog

| | OREGON | OEM No. | Length | Center | Outer | C to C | W / T | Off | Lift | Prod. Code |
|---|---|---|---|---|---|---|---|---|---|---|
| | **91-034** | 82325 | **25** | 1/2 | | | 2.25/.250 | 0 | 1 | |
| (3) for 72" cut, fits models FTH, PX2873, PZ3073, RDTH, TH, ZT18, ZT180, ZT22, ZT22-W, ZT220, ZT220-W, ZT230, ZT25, ZT250, ZT30D | | | | | | | | | | |
| | **92-164** | | 25 | 1/2 | | | 2.50/.203 | 0 | 1 | |
| (2) for 48", (3) for 72" cut, mulching, fits models ATH, FTH | | | | | | | | | | |
| | **396-737** | 50029160<br>50034300<br>50034307<br>50056495<br>95755 | 25 | 1/2 | | | 3.00/.250 | 0 | 1 | |
| Gator G6® | | | | | | | Heavy-Duty High-Lift Xtended Fusion® | | | G6 |
| | **91-036** | 88773 | **25** | 1/2 | | | 2.50/.250 | 1/4 | 1-1/16 | |
| (2) for 48", (3) for 72" cut, fits models ATH, FTH | | | | | | | Xtended | | | |
| | **91-544** | | 25 | 1/2 | | | 2.50/.250 | 5/16 | 3/4 | |
| (2) for 48", (3) for 72" cut, low-lift, fits models ATH, FTH | | | | | | | | | | |
| | **91-533** | | 25 | 1/2 | | | 2.50/.250 | 5/16 | 1 | |
| (2) for 48", (3) for 72" cut, high-lift, fits models ATH, FTH | | | | | | | | | | |
| | **96-778** | | 25 | 1/2 | | | 2.50/.250 | 5/16 | 3/4 | |
| Gator G3™ | | | | | | | | | | G3 |
| | **396-778** | | 25 | 1/2 | | | 3.00/.250 | 5/16 | 1 | |
| Gator G6 | | | | | | | Heavy-Duty High-Lift Xtended Fusion® | | | G6 |
| | **91-489** | 50033779 | **29** | 1/2 | 1/2 | 6-1/2 | 2.50/.312 | 11/16 | 1 | |
| (3) for 84" cut, RDTH 84 | | | | | | | Xtended | | | |

## Caroni

| | | | | | | | | | | |
|---|---|---|---|---|---|---|---|---|---|---|
| | **96-603** | 48007700 | **16-11/16** | 3/4 | | | 2.50/.203 | 11/16 | 3/4 | |
| Gator G3 | | | | | | | | | | G3 |
| | **91-141** | 59006200 | **20-1/4** | 3/4 | | | 2.00/.250 | 5/8 | 15/16 | |
| (3) for 59" cut, model TC590N | | | | | | | | | | |
| | **96-605** | | 20-1/4 | 3/4 | | | 2.50/.203 | 5/8 | 3/4 | |
| Gator G3 | | | | | | | | | | G3 |

B

## Caroni

| | OREGON | OEM No. | Length | Center | Outer | C to C | W / T | Off | Lift | Prod. Code |
|---|---|---|---|---|---|---|---|---|---|---|
| | **91-142** | 71001000 | **24-1/8** | 3/4 | | | 2.50/.250 | 3/4 | 1-1/8 | |
| (3) for 71" cut, model TC710N | | | | | | | | | | |
| | **396-707** | | 24-1/8 | 3/4 | | | 3.00/.250 | 3/4 | 1 | |
| Gator® G6® | | | | | | | Heavy-Duty High-Lift Xtended Fusion® | | | G6 |

## Country Clipper

| | | | | | | | | | | |
|---|---|---|---|---|---|---|---|---|---|---|
| | **92-150** | H1715 | **15** | 1/2 | | | 2.50/.203 | 5/16 | 1-1/4 | |
| (3) for 42" cut, high-lift, JaZee I, JaZee | | | | | | | | | | |
| | **91-557** | H1665 | 15 | 1/2 | | | 2.50/.250 | 5/16 | 3/4 | |
| (3) for 42" cut, low-lift, JaZee I, JaZee | | | | | | | | | | |
| 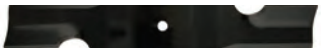 | **91-536** | | 15 | 1/2 | | | 2.50/.250 | 5/16 | 1 | |
| (3) for 42" cut, JaZee I, JaZee | | | | | | | | | | |
| | **96-343** | H2013 | 15 | 1/2 | | | 2.50/.203 | 5/16 | 1 | |
| Gator G3™ | | | | | | | Xtended | | | G3 |
| | **91-123** | H1714 | **16-15/16** | 1/2 | | | 2.50/.203 | 5/16 | 1-5/16 | |
| (3) for 48" cut, high-lift, JaZee, JaZee II/Pro, Charger, Trek Hydro | | | | | | | | | | |
| | **91-126** | H1666 | 16-15/16 | 1/2 | | | 2.50/.203 | 5/16 | 3/4 | |
| (3) for 48" cut, low-lift, JaZee, JaZee II/Pro, Charger, Trek Hydro | | | | | | | | | | |
| | **99-617** | H2202 | 16-15/16 | 1/2 | | | 2.50/.203 | 5/16 | 3/4 | |
| Gator G3 | | | | | | | | | | G3 |
| | **92-160** | H-2653 | **16-15/16** | 5/8 | | | 2.50/.203 | 5/16 | 1-1/4 | |
| (3) for 48" cut, high-lift, Edge, Edge XLT, Wrangler | | | | | | | | | | |
| | **92-161** | H-2659 | 16-15/16 | 5/8 | | | 2.50/.203 | 5/16 | 3/4 | |
| (3) for 48" cut, low-lift, Edge, Edge XLT, Wrangler | | | | | | | | | | |
| | **92-180** NEW | H-2882 | 16-15/16 | 5/8 | | | 2.50/.203 | 5/16 | 1 | |
| (3) for 48" deck. Notched high-lift | | | | | | | | | | |
| | **592-160** | H-2665<br>H-2883 | 16-15/16 | 5/8 | | | 3.00/.187 | 5/16 | 1 | |
| Gator G5™ | | | | | | | High-Lift Xtended Fusion® | | | G5 |

B

# Blades - OEM Replacements

## Country Clipper

| | OREGON | OEM No. | Length | Center | Outer | C to C | W / T | Off | Lift | Prod. Code |
|---|---|---|---|---|---|---|---|---|---|---|
| (3) for 52" cut, (2) for 36" cut , JaZee, Charger, Boss, Trek Hydro | **91-129** | H2246<br>H2499 | **18-3/8** | 1/2 | | | 2.50/.203 | 5/16 | 1-1/4 | |
| (3) for 52" deck, (2) for 36" deck low lift | **92-179**<br>NEW | H-2387 | 18-3/8 | 1/2 | | | 2.50/.203 | 5/16 | 3/4 | |
| Gator® G3™ | **96-129** | H2251<br>H2387 | 18-3/8 | 1/2 | | | 2.50/.203 | 5/16 | 3/4 | G3 |
| (3) for 52" cut, high-lift, Charger, JaZee, JaZee Pro, Wrangler, Edge, Edge XLT, Challenger | **92-137** | H-2654 | **18-3/8** | 5/8 | | | 2.50/.203 | 5/16 | 1-1/4 | |
| (3) for 52" cut, low-lift, Charger, JaZee, JaZee Pro, Wrangler, Edge, Edge XLT, Challenger | **92-163** | H-2660 | 18-3/8 | 5/8 | | | 2.50/.203 | 5/16 | 3/4 | |
| (3) for 52" deck, (2) for 36" deck high-lift, notched blade | **92-154**<br>NEW | H-2883 | 18-3/8 | 5/8 | | | 2.50/.203 | 5/16 | 1 | |
| Gator G5™ | **592-137** | H-2666<br>H-2884 | 18-3/8 | 5/8 | | | 3.00/.187 | 5/16 | 1 | High-Lift Xtended Fusion® G5 |
| (3) for 60" cut, high-lift, JaZee Pro, Charger, Boss | **91-128** | H1708<br>H2500 | **20-15/16** | 1/2 | | | 2.50/.203 | 5/16 | 1-1/4 | |
| (3) for 60" cut, low-lift, JaZee Pro, Charger, Boss | **91-127** | H1667 | 20-15/16 | 1/2 | | | 2.50/.203 | 5/16 | 3/4 | |
| Gator G3 | **99-615** | H2122<br>H2203 | 20-15/16 | 1/2 | | | 2.50/.203 | 5/16 | 3/4 | G3 |
| (3) for 60" cut, (2) for 41" cut, high-lift, 1215L, Boss, Charger, JaZee, JaZee Pro, Wrangler, Edge, Edge XLT, Defender, Challenger | **92-138** | H2649<br>H-2655 | **20-15/16** | 5/8 | | | 2.50/.203 | 5/16 | 1-1/4 | |

GROUP CONTINUES

B

## Country Clipper

| | OREGON | OEM No. | Length | Center | Outer | C to C | W / T | Off | Lift | Prod. Code |
|---|---|---|---|---|---|---|---|---|---|---|
| | **92-166** NEW | H-2885 | 20-15/16 | 5/8 | | | 2.50/.203 | 5/16 | 1 | |
| (3) for 60" deck, (2) for 41" cut high-lift, notched blade | | | | | | | | | | |
| | **92-181** NEW | H-2886 | 20-15/16 | 5/8 | | | 2.50/.203 | 5/16 | 1 | |
| | | | | | | | | | Fusion® | |
| (3) for 60" deck, (2) for 41" cut high-lift, notched blade | | | | | | | | | | |
| | **392-138** | H-2667<br>H-2885<br>H-2886 | 20-15/16 | 5/8 | | | 3.00/.250 | 5/16 | 1 | |
| | | | | | | | | | Heavy-Duty High-Lift Xtended Fusion® | G6 |
| Gator G6® | | | | | | | | | | |
| | **92-162** | H-2650<br>H-2656 | **24-15/16** | 5/8 | | | 2.50/.203 | 5/16 | 1-1/4 | |
| (3) for 72" cut, high-lift, Boss | | | | | | | | | | |
| | **91-533** | | **25** | 1/2 | | | 2.50/.250 | 5/16 | 1 | |
| (3) for 72" cut, high-lift, Boss | | | | | | | | | | |
| | **91-544** | H2397 | 25 | 1/2 | | | 2.50/.250 | 5/16 | 3/4 | |
| (3) for 72" cut, low-lift, Boss | | | | | | | | | | |
| | **92-178** NEW | H-2501 | 25 | 1/2 | | | 2.50/.203 | 5/16 | 1-1/4 | |
| (3) for 72" deck, rolled high-lift | | | | | | | | | | |
| | **91-036** | | 25 | 1/2 | | | 2.50/.250 | 1/4 | 1-1/16 | |
| | | | | | | | | | Xtended | |
| (3) for 72" cut, mulching, Boss | | | | | | | | | | |
| | **96-778** | H2459<br>H2501 | 25 | 1/2 | | | 2.50/.250 | 5/16 | 3/4 | |
| | | | | | | | | | | G3 |
| Gator® G3™ | | | | | | | | | | |

## Craftsman

| | | | | | | | | | | |
|---|---|---|---|---|---|---|---|---|---|---|
| | **95-014** | 106635X<br>25034<br>25034R | **15-3/8** | 3/8 | | | 2.25/.187 | 0 | 1 | |
| (3) for 44" cut | | | | | | | | | | |
| | **95-607** | | 15-3/8 | 3/8 | | | 2.25/.187 | 0 | 3/4 | |
| | | | | | | | | | | G3 |
| Gator G3 | | | | | | | | | | |
| | **95-006** | 130652<br>130652MS | **15-3/8** | 5 pt. Star | | | 2.25/.149 | 1/8 | 15/16 | |
| (3) for 44" cut | | | | | | | | | | |
| | **95-049** | 532130652 | 15-3/8 | 5 pt. Star | | | 2.25/.187 | 0 | 1 | |
| (3) for 44" cut, heavy-duty | | | | | | | | | | |

B

# Blades - OEM Replacements

## Craftsman

| | OREGON | OEM No. | Length | Center | Outer | C to C | W / T | Off | Lift | Prod. Code |
|---|---|---|---|---|---|---|---|---|---|---|
| (3) for 46" cut, high-lift | **95-052** | 157033<br>170698<br>176084 | **15-1/2** | 5 pt.<br>Star | | | 2.25/.149 | 1/8 | 1 | |
| (3) for 46" cut, mulcher | **95-045** | 145708<br>152443<br>163819 | 15-1/2 | 5 pt.<br>Star | | | 2.25/.149 | 1/8 | 1 | |
| Gator G3 | **95-614** | | 15-1/2 | 5 pt.<br>Star | | | 2.50/.187 | 0 | 3/4 | G3 |
| Gator G5™ | **595-614** | | 15-1/2 | 5 pt.<br>Star | | | 3.00/.164 | 0 | 1 | G5<br>High-Lift Xtended Fusion® |
| (1) 91-615 & (2) 91-616 for 54" cut | **91-615** | 1736044AYP | **16** | 1 | 3/8 | 2-9/16 | 2.50/.203 | 0 | 1-1/4 | |
| (3) for 48" cut, high-lift | **195-062** | 173920<br>180054 | **16-11/16** | 5 pt.<br>Star | 5/16 | 3-15/16 | 2.50/.203 | 0 | 1-1/4 | 100<br>Xtended |
| (3) for 48" cut, mulching | **95-068** | 173921 | 16-11/16 | 5 pt.<br>Star | | | 2.50/.203 | 5/16 | 13/16 | Xtended |
| Gator® G3™ | **96-615** | | 16-11/16 | 5 pt.<br>Star | | | 2.50/.203 | 0 | 1 | G3 |
| Gator G5™ | **596-615** | | 16-11/16 | 5 pt.<br>Star | | | 3.00/.187 | 0 | 1 | G5<br>High-Lift Xtended Fusion® |
| (3) for 48" cut | **92-139** | 942-04417 | **17** | 3/4 | | | 3.00/.203 | 7/16 | 1-5/16 | |
| Gator G6® | **392-139** | | 17 | 3/4 | | | 3.00/.250 | 7/16 | 1 | G6<br>Heavy-Duty High-Lift Xtended Fusion® |
| (3) for 50" cut | **95-027** | 121798X | **17-3/8** | 3/8 | | | 2.25/.187 | 0 | 1 | |

B

## Craftsman

| | OREGON | OEM No. | Length | Center | Outer | C to C | W / T | Off | Lift | Prod. Code |
|---|---|---|---|---|---|---|---|---|---|---|
| (3) for 50" cut | **95-018** | 137380 | **17-3/8** | 5 pt. Star | | | 2.25/.149 | 1/8 | 15/16 | |
| (3) for 50" cut, high-lift for bagging, heavy-duty | **95-050** | | 17-3/8 | 5 pt. Star | | | 2.25/.187 | 0 | 1 | |
| Gator G3 | **95-609** | | 17-3/8 | 5 pt. Star | | | 2.50/.187 | 0 | 3/4 | G3 |
| Gator G5 | **595-609** | | 17-3/8 | 5 pt. Star | | | 3.00/.164 | 0 | 1 | High-Lift Xtended Fusion® G5 |
| (2) for 33" cut, wide-area mowers, 247374880 | **98-094** | 742-04154<br>742-04154A<br>942-04154<br>942-04154A | **17-7/8** | bow-tie | | | 2.50/.149 | 1 | 1-1/8 | |
| Gator® G3™ | **98-671** | | 17-7/8 | bow-tie | 5/16 | 2-1/2 | 2.50/.149 | 1 | 3/4 | G3 |
| (2) for 36" cut, high-lift for bagging | **95-034** | 110785X<br>120262X<br>126338X<br>143969 | **18-3/16** | 3/8 | 3/8 | 10 | 2.50/.187 | 0 | 7/8 | |
| (2) for 36" cut | **95-036** | 127841<br>136969<br>138496<br>138969 | **18-3/16** | 5 pt. Star | | | 2.25/.134 | 1/8 | 1 | |
| (2) for 36" cut, heavy-duty version of 95-036 | **95-026** | | 18-3/16 | 5 pt. Star | | | 2.25/.187 | 1/8 | 1 | |
| Gator G3 | **95-613** | | 18-3/16 | 5 pt. Star | | | 2.50/.187 | 0 | 3/4 | G3 |
| Gator G5™ | **595-613** | | 18-3/16 | 5 pt. Star | | | 3.00/.164 | 0 | 1 | High-Lift Xtended Fusion® G5 |
| (3) for 54" cut | **195-072** | 187256 | **18-7/16** | 5 pt. Star | 5/16 | 3-15/16 | 2.75/.187 | 1/2 | 1-3/16 | Xtended 100 |
| (3) for 54" cut, mulching | **95-082** | 187255 | 18-7/16 | 5 pt. Star | | | 2.50/.187 | 5/16 | 13/16 | |

GROUP CONTINUES

# Blades - OEM Replacements

## Craftsman

| | OREGON | OEM No. | Length | Center | Outer | C to C | W / T | Off | Lift | Prod. Code |
|---|---|---|---|---|---|---|---|---|---|---|
| | | | GROUP CONTINUES | | | | | | | |
| Gator G3 | **95-605** | | 18-7/16 | 5 pt. Star | | | 2.50/.187 | 1/2 | 3/4 | G3 |
| Gator G5 | **595-605** | | 18-7/16 | 5 pt. Star | | | 3.00/.164 | 1/2 | 1 | High-Lift Xtended Fusion® G5 |
| (2) for 38" cut, high-lift | **95-031** | 121263X<br>123431X<br>143978X<br>532121263<br>532143978 | **19-1/4** | 3/8 | | | 2.25/.187 | 0 | 1 | |
| (2) for 38" cut | **195-033** | 127842 | **19-1/4** | 5 pt. Star | 3/8 | 3-1/8 | 2.25/.134 | 1/8 | 1-1/16 | Xtended 100 |
| (2) for 38" cut, heavy-duty version of 95-033 | **95-038** | | 19-1/4 | 5 pt. Star | | | 2.25/.187 | 1/8 | 1-1/16 | |
| (2) for 38" cut, high-lift | **95-047** | 131322 | 19-1/4 | 5 pt. Star | | | 2.25/.187 | 0 | 1 | |
| (2) for 38" cut, mulcher | **195-003** | 134148<br>134148M<br>134148X<br>138497<br>139744MS<br>139774<br>24692<br>532134148<br>532139774 | 19-1/4 | 5 pt. Star | 5/16 | 3-1/8 | 2.25/.134 | 1/8 | 7/8 | Xtended 100 |
| (2) for 38" cut, heavy-duty version of 195-003 | **95-099** | | 19-1/4 | 5 pt. Star | | | 2.25/.149 | 1/8 | 1 | |
| Gator® G3™ | **95-601** | | 19-1/4 | 5 pt. Star | | | 2.50/.187 | 0 | 3/4 | G3 |
| Gator G5™ | **595-601** | | 19-1/4 | 5 pt. Star | | | 3.00/.164 | 0 | 1 | High-Lift Xtended Fusion® G5 |
| (2) for 38" cut | **95-015** | 100669K<br>106634X<br>24691<br>25036<br>25036R<br>532106634 | **19-3/8** | 3/8 | | | 2.25/.187 | 0 | 1 | |

B

## Craftsman

| | OREGON | OEM No. | Length | Center | Outer | C to C | W / T | Off | Lift | Prod. Code |
|---|---|---|---|---|---|---|---|---|---|---|
| 20" cut, walk-behind | **95-024** | 33203<br>33204<br>56400<br>69229<br>80204<br>8029<br>850972 | **19-15/16** | 5/8 | 3/8 | 1-7/8 | 2.50/.149 | 9/16 | 7/8 | |
| 20" cut, mulcher | **95-041** | 25744 | 19-15/16 | 5/8 | 3/8 | 1-7/8 | 2.50/.149 | 7/16 | 15/16 | |
| Gator G5 | **595-024** | | 19-15/16 | 5/8 | 3/8 | 1-7/8 | 3.00/.134 | 5/8 | 1 | High-Lift Xtended Fusion® G5 |
| 20" cut, mulcher, walk-behind | **95-051** | 129277<br>131694<br>133346<br>134871<br>145106 | **20** | 5/8 | 3/8 | 1-7/8 | 2.25/.134 | 7/16 | 11/16 | |
| 20" cut, mulching, walk-behind | **95-044** | 114884<br>532752233<br>752233 | 20 | 5/8 | 3/8 | 1-7/8 | 2.00/.134 | 5/16 | 13/16 | |
| (1) 91-615 & (2) 91-616 for 54" cut | **91-616** | 1736043AYP | **20-9/16** | 1 | 3/8 | 2-9/16 | 2.50/.203 | 0 | 1-1/4 | |
| Gator® G3™ | **96-398** | | 20-9/16 | 1 | 3/8 | 2-9/16 | 2.50/.203 | 0 | 1 | G3 |
| 21" cut, mulching | **98-007** | 140026 | **20-15/16** | 13/16 | 3/8 | 2-1/2 | 2.25/.134 | 5/16 | 15/16 | |
| 21" cut | **98-002** | | 20-15/16 | 13/16 | 3/8 | 2-1/2 | 2.25/.134 | 1/4 | 13/16 | |
| Gator G3 | **98-102** | | 20-15/16 | 13/16 | 3/8 | 2-1/2 | 2.50/.134 | 5/16 | 3/4 | G3 |

B

# Blades - OEM Replacements

## Craftsman

| | OREGON | OEM No. | Length | Center | Outer | C to C | W / T | Off | Lift | Prod. Code |
|---|---|---|---|---|---|---|---|---|---|---|
| (2) for 42" cut, sand blade | **195-048** | | **21** | 5 pt. Star | 5/16 | 3-1/8 | 2.25/.187 | 0 | 3/4 | Xtended 100 |
| (2) for 42" cut, high-lift, fits CT12542B | **195-032** | 127843<br>131323<br>138498<br>138791<br>138971 | 21 | 5 pt. Star | | | 2.25/.149 | 1/8 | 1-1/16 | Xtended 100 |
| (2) for 42" cut, heavy-duty version of 195-032 | **195-039** | | 21 | 5 pt. Star | 5/16 | 3-1/8 | 2.25/.187 | 1/8 | 1-1/18 | Xtended 100 |
| (2) for 42" cut, mulcher | **195-005** | 133128<br>134149<br>24676<br>422719<br>424752 | 21 | 5 pt. Star | | | 2.25/.134 | 1/8 | 7/8 | Xtended 100 |
| (2) for 42" cut, mulching, heavy-duty version of 195-005 | **195-019** | 139775 | 21 | 5 pt. Star | | | 2.25/.149 | 1/8 | 15/16 | Xtended 100 |
| (2) for 42" cut | **95-086** | | 21 | 5 pt. Star | | | 2.50/.203 | 0 | 1.000 | |
| Gator® G3™ | **96-900** | | 21 | 5 pt. Star | | | 2.50/.187 | 0 | 3/4 | G3 |
| Gator G5™ | **596-900** | | 21 | 5 pt. Star | | | 3.00/.164 | 0 | 1 | High-Lift Xtended Fusion® G5 |
| 21" cut, walk-behind | **95-071** | 159267 | **21** | 5/8 | 3/8 | 1-7/8 | 2.75/.134 | 1/2 | 1-1/8 | |
| 21" cut, walk-behind | **95-057** | 175064<br>406712 | 21 | 5/8 | 3/8 | 1-7/8 | 2.75/.134 | 1/2 | 1-9/16 | |
| 21" cut, walk-behind, mulching | **195-067** | 189028 | 21 | 5/8 | 3/8 | 1-7/8 | 2.25/.134 | 9/16 | 1-1/16 | Xtended 100 |
| Gator G3 | **95-621** | 580258101<br>580258102 | 21 | 5/8 | 3/8 | 1-7/8 | 2.50/.187 | 1/2 | 3/4 | G3 |
| Gator G5 | **595-621** | | 21 | 5/8 | 3/8 | 1-7/8 | 3.00/.149 | 1/2 | 1 | High-Lift Xtended Fusion® G5 |

B

## Craftsman

| | OREGON | OEM No. | Length | Center | Outer | C to C | W / T | Off | Lift | Prod. Code |
|---|---|---|---|---|---|---|---|---|---|---|
| (2) for 42" cut | **198-059** | 942-0616A | **21-3/16** | 5/8 6 pt. Star | | | 2.75/.149 | 3/8 | 1-1/2 | Xtended 100 |
| Gator G3 | **98-629** | 942-04312 | 21-3/16 | 5/8 6 pt. Star | | | 2.50/.187 | 5/16 | 3/4 | G3 |
| Gator G5 | **598-629** | | 21-3/16 | 5/8 6 pt. Star | | | 3.00/.164 | 5/16 | 1 | High-Lift Xtended Fusion® G5 |
| 21" cut, mulcher | **198-049** | 942-0741 942-0741A | **21** | bow-tie | 5/16 | 2-1/2 | 2.25/.134 | 1/4 | 15/16 | Xtended 100 |
| Gator G3 | **98-631** | 942-0741A-X | 21 | bow-tie | 5/16 | 2-1/2 | 2.50/.187 | 5/16 | 3/4 | G3 |
| Gator G5 | **598-631** | | 21 | bow-tie | 5/16 | 2-1/2 | 3.00/.149 | 5/16 | 1 | High-Lift Xtended Fusion® G5 |
| 22" cut, walk-behind | **95-023** | 33214 33219 406713 532406713 532850973 701213 850973 | **21-3/4** | 5/8 | 3/8 | 1-7/8 | 2.50/.149 | 9/16 | 7/8 | |
| 22" cut, walk-behind, mulching | **95-042** | 133348 532752234 752234 | 21-3/4 | 5/8 | 3/8 | 1-7/8 | 2.50/.149 | 7/16 | 15/16 | |
| 22" cut, walk-behind, mulching | **195-021** | 134768 141114 157101 700973 91333256 91333269 | 21-3/4 | 5/8 | 3/8 | 1-7/8 | 2.25/.134 | 1/2 | 15/16 | Xtended 100 |
| 22" cut, walk-behind, mulching | **95-073** | 406707 532406707 582931401 917532406707 | 21-3/4 | 5/8 | 3/8 | 1-7/8 | 2.25/.134 | 9/16 | 1-3/16 | |
| Gator® G3™ | **95-602** | | 21-3/4 | 5/8 | 3/8 | 1-7/8 | 2.50/.187 | 1/2 | 3/4 | G3 |
| Gator G5™ | **595-602** | | 21-3/4 | 5/8 | 3/8 | 1-7/8 | 3.00/.149 | 1/2 | 1 | High-Lift Xtended Fusion® G5 |

B

# Blades - OEM Replacements

## Craftsman

| | OREGON | OEM No. | Length | Center | Outer | C to C | W / T | Off | Lift | Prod. Code |
|---|---|---|---|---|---|---|---|---|---|---|
| For 22" Walkbehind Star Center Hole | **95-076** | 402463<br>421825 | **21-15/16** | 5 pt.<br>Star | | | 2.25/.134 | 9/16 | 13/16 | |
| Gator G3 | **95-615** | 580244001<br>585587701 | 21-15/16 | 5 pt.<br>Star | | | 2.25/.134 | 9/16 | 3/4 | G3 |
| (2) for 46" cut | **98-096** | 942-04244A<br>942-04290 | **23-1/4** | 5/8<br>6 pt. Star | | | 3.75/.149 | 1/4 | 1-3/8 | |
| Gator G3 | **96-401** | | 23-1/4 | 5/8<br>6 pt. Star | | | 3.00/.149 | 1/4 | 1 | G3 |

## Cub Cadet

| | OREGON | OEM No. | Length | Center | Outer | C to C | W / T | Off | Lift | Prod. Code |
|---|---|---|---|---|---|---|---|---|---|---|
| (1) 98-069 and (2) 98-054, for 46" cut - star center hole, center blade for 46" cut model series 600 and 800 built since 1997 | **98-069** | 742-0645<br>942-0645 | **14-13/16** | 5/8<br>6 pt. Star | | | 3.00/.120 | 5/16 | 1-3/16 | |
| Gator® G3™ | **98-670** | | 14-13/16 | 5/8<br>6 pt. Star | | | 2.50/.187 | 5/16 | 3/4 | G3 |
| (1) 91-327 & (2) 91-330 for 46" cut, center blade on 46 deck | **91-327** | 742-3010<br>742-3010-0637<br>759-3818 | **14-7/8** | 3/4 | | | 3.00/.203 | 5/16 | 1-1/4 | |
| | | | | | | | Xtended | | | |
| (1) 98-083 & (2) 98-082 for 46"cut LT1046, center blade, round hole | **98-083** | 742-04016<br>759-04020 | 14-7/8 | 3/4 | | | 2.50/.203 | 7/16 | 1-1/8 | |
| | | | | | | | Xtended | | | |
| (1) 98-084 & (2) 98-085 for 46" cut LT1046 and i1046, center blade, star hole | **98-084** | 742-04124<br>942-04124 | **14-7/8** | 5/8<br>6 pt. Star | | | 2.50/.203 | 7/16 | 1-1/8 | |
| | | | | | | | Xtended | | | |
| (1) 98-061 & (2) 198-063 for 46" cut, High-lift, LT1046 and i1046, center blade, star hole | **98-061** | | 14-7/8 | 5/8<br>6 pt. Star | | | 2.50/.149 | 7/16 | 1-3/16 | |
| | | | | | | | Xtended | | | |
| Gator G3 | **98-637** | 742-04124-X<br>742-0424-X<br>942-04124-X<br>942-0612-X | 14-7/8 | 5/8<br>6 pt. Star | | | 2.50/.187 | 7/16 | 3/4 | G3 |

B

## Cub Cadet

| | OREGON | OEM No. | Length | Center | Outer | C to C | W / T | Off | Lift | Prod. Code |
|---|---|---|---|---|---|---|---|---|---|---|
| (3) for 44" cut | **91-414** | 742-03002-0637<br>742-3002<br>759-3812<br>IH-59704-C1 | **15-1/8** | 3/4 | | | 2.50/.203 | 1/2 | 11/16 | |
| (3) for 44" cut, Z Force Deck | **91-073** | 742-3036<br>759-3929<br>759-3939<br>OCC-742-3036 | **16** | 3/4 | 5/16 | 2-1/2 | 2.50/.203 | 9/16 | 1-1/8 | |
| (3) for 44" cut, high-lift, Z Force Deck | **98-080** | 01008616<br>02005020<br>02005020-0637 | **16** | 3/4 | | | 3.00/.203 | 7/16 | 1-5/16 | |
| Gator® G5™ | **596-373** | | 16 | 3/4 | 5/16 | 2-1/2 | 3.00/.187 | 1/2 | 1 | G5 (High-Lift Xtended Fusion®) |
| (2) 91-330 & (1) 91-327 for 46" cut, (2) for 32" cut, outside blade for 46" deck | **91-330** | 742-3011<br>742-3011-0637<br>759-3819 | **16-1/4** | 3/4 | | | 3.00/.203 | 5/16 | 1-3/8 | |
| (1) 98-083 & (2) 98-082 for 46"cut LT1046, center blade, round hole | **98-082** | 742-04015<br>759-04019 | **16-5/16** | 3/4 | | | 2.50/.203 | 7/16 | 1-1/8 | Xtended |
| (1) 98-084 & (2) 98-085 for 46" cut LT1046 and i1046, outside blade, star hole | **98-085** | 742-04125<br>942-04125 | **16-1/4** | 5/8<br>6 pt. Star | | | 2.50/.203 | 7/16 | 1-1/8 | Xtended |
| (1) 98-061 & (2) 198-063 for 46" cut, High-lift, LT1046 and i1046, outside blade, star hole | **198-063** | | 16-1/4 | 5/8<br>6 pt. Star | | | 2.50/.149 | 7/16 | 1-1/8 | Xtended — 100 |
| Gator G3™ | **98-640** | 742-04125-X<br>942-04125-X<br>942-0611-X | 16-1/4 | 5/8<br>6 pt. Star | | | 2.50/.187 | 7/16 | 3/4 | G3 |
| Gator G5 | **598-640** | | 16-1/4 | 5/8<br>6 pt. Star | | | 3.00/.164 | 7/16 | 1 | G5 (High-Lift Xtended Fusion®) |
| (2) 98-054 & (1) 98-069 for 46" cut, outside blades for 46" cut model series 600 & 800 built since 1997 | **98-054** | 742-0644<br>942-0644 | **16-1/4** | 5/8<br>6 pt. Star | | | 3.00/.120 | 5/16 | 1-3/16 | |
| Gator G3 | **98-634** | | 16-1/4 | 5/8<br>6 pt. Star | | | 2.50/.187 | 5/16 | 3/4 | G3 |

B

# Blades - OEM Replacements

## Cub Cadet

| | OREGON | OEM No. | Length | Center | Outer | C to C | W / T | Off | Lift | Prod. Code |
|---|---|---|---|---|---|---|---|---|---|---|
| (3) for 48" cut, Z Force deck, high-lift | **98-081** | 1004772 | **16-1/2** | 3/4 | | | 3.00/.203 | 7/16 | 1-3/8 | |
| Gator® G3™ | **96-381** | | 16-1/2 | 3/4 | | | 3.00/.203 | 7/16 | 3/4 | G3 |
| (3) for 48" cut, high-lift | **91-056** | 742-3025<br>759-3826 | **16-1/2** | 3/4 | 5/16 | 2-1/2 | 2.50/.203 | 1/2 | 1-5/16 | |
| (3) for 48" cut, low-lift | **91-333** | 742-3019<br>759-3825<br>OCC-742-3019 | 16-1/2 | 3/4 | 5/16 | 2-1/2 | 2.50/.203 | 1/2 | 15/16 | |
| Gator G3 | **90-697** | | 16-1/2 | 3/4 | 5/16 | 2-1/2 | 2.50/.203 | 1/2 | 3/4 | G3 |
| Gator G5™ | **596-330** | | 16-1/2 | 3/4 | 5/16 | 2-1/2 | 3.00/.187 | 1/2 | 1 | High-Lift Xtended Fusion® G5 |
| (3) for 48" cut, Tank LZ, Tank SZ, Z-Force, Z-Force S | **92-139** | 1005336P<br>2005017<br>742-04417<br>942-04417 | **17** | 3/4 | | | 3.00/.203 | 7/16 | 1-5/16 | |
| Gator G6® | **392-139** | 02005017-X<br>742-04417-X<br>942-04417-X | 17 | 3/4 | | | 3.00/.250 | 7/16 | 1 | Heavy-Duty High-Lift Xtended Fusion® G6 |
| (3) for 50" cut | **91-415** | 742-3003<br>759-3813<br>759-3837<br>IH-61104-C1 | **17-3/16** | 3/4 | | | 2.50/.203 | 1/2 | 11/16 | |
| Gator G3 | **90-656** | | 17-3/16 | 3/4 | | | 2.50/.203 | 7/16 | 3/4 | G3 |
| (3) for 50" cut, Z Force deck, LT1050, RZT-50 | **198-086** | 490-110-C123<br>490-110-M126<br>742-04053<br>742-04053A<br>742-04053B<br>742-04053C<br>942-04053<br>942-04053A | **17-7/8** 6 pt. Star | 5/8 | | | 2.50/.149 | 7/8 | 3/4 | Xtended 100 |
| | | 942-04053B<br>942-04053C<br>OCC-742-04053<br>OEM-742-04053 | | | | | | | | |

GROUP CONTINUES

B

## Cub Cadet

| | OREGON | OEM No. | Length | Center | Outer | C to C | W / T | Off | Lift | Prod. Code |
|---|---|---|---|---|---|---|---|---|---|---|
| (3) for 50" cut, High-lift, Z Force deck, LT1050, RZT-50 | **98-097** | 742-04056<br>742-04056A<br>742-04056A-0637<br>742-04056B<br>742-04056B-0637<br>742-04056C<br>742-04056C-0637<br>942-04056<br>942-04056A | 17-7/8 | 5/8<br>6 pt. Star | | | 2.50/.149 | 15/16 | 1-3/8 | |
| Gator® G3™ | **91-938** | 942-04053C-X<br>942-04053-X | 17-7/8 | 5/8<br>6 pt. Star | | | 2.50/.187 | 15/16 | 3/4 | G3 |
| Gator G5™ | **591-938** | | 17-7/8 | 5/8<br>6 pt. Star | | | 3.00/.164 | 15/16 | 1 | High-Lift Xtended Fusion® G5 |
| (3) for 50" cut, LT1024, LT1050 | **98-087** | 742-04068<br>742-04068C<br>759-04047<br>OCC-742-04068 | **17-7/8** | 3/4 | | | 2.50/.149 | 1 | 1-1/8 | Xtended |
| Gator G3 | **96-387** | | 17-7/8 | 3/4 | | | 2.50/.187 | 1 | 3/4 | Xtended G3 |
| Gator G5 | **596-387** | | 17-7/8 | 3/4 | | | 3.00/.164 | 15/16 | 1 | High-Lift Xtended Fusion® G5 |
| (3) for 50" cut, M50-KHS, Z Force | **92-015** | 01010168<br>01010168-0637<br>01010168-X<br>OCC-01010168 | **17-7/8** | 3/4 | | | 2.50/.203 | 0 | 1 | |
| Gator G5 | **592-015** | | 17-7/8 | 3/4 | | | 3.00/.164 | 0 | 1 | High-Lift Xtended Fusion® G5 |
| (2) For 33" wide-area mowers | **98-094** | 742-04154<br>742-04154A<br>942-04154<br>942-04154A<br>OCC-742-04154 | **17-7/8** | bow-tie | | | 2.50/.149 | 1 | 1-1/8 | |
| Gator G3 | **98-671** | | 17-7/8 | bow-tie | 5/16 | 2-1/2 | 2.50/.149 | 1 | 3/4 | G3 |

# Blades - OEM Replacements

## Cub Cadet

| | OREGON | OEM No. | Length | Center | Outer | C to C | W / T | Off | Lift | Prod. Code |
|---|---|---|---|---|---|---|---|---|---|---|
| (3) for 54" cut, 2002 and newer | **98-072** | 742-0677<br>742-0677A<br>742-0677B<br>942-0677B<br>OCC-742-0677<br>OEM-742-0677 | **18-1/2** | 5/8<br>6 pt. Star | | | 3.00/.203<br>Xtended | 1/2 | 1-1/4 | |
| Gator® G3™ | **98-672** | | 18-1/2 | 5/8<br>6 pt. Star | | | 2.50/.203 | 1/2 | 1 | G3 |
| Gator G5™ | **598-672** | | 18-1/2 | 5/8<br>6 pt. Star | | | 3.00/.203<br>High-Lift Xtended Fusion® | 1/2 | 1 | G5 |
| Gator G6® | **398-672** | | 18-1/2 | 5/8<br>6 pt. Star | | | 3.00/.250<br>Heavy-Duty High-Lift Xtended Fusion® | 1/2 | 1 | G6 |
| (3) for 54" cut, high-lift | **91-440** | 490-110-C121<br>742-3013<br>742-3013-0637<br>759-3820<br>OCC-742-3013 | **18-1/2** | 3/4 | | | 3.00/.203<br>Xtended | 1/2 | 1-1/4 | |
| Gator G3 | **96-333** | 759-3857 | 18-1/2 | 3/4 | | | 2.50/.203 | 1/2 | 3/4 | G3 |
| Gator G5 | **596-333** | | 18-1/2 | 3/4 | | | 3.00/.203<br>High-Lift Xtended Fusion® | 1/2 | 1 | G5 |
| 19" cut, mulching, CC189, CC500, CC550ES, CC550SP | **92-140** | 742-0739<br>942-0739<br>OCC-742-0739 | **19** | bow-tie | 5/16 | 2-1/2 | 2.25/.134 | 1/4 | 1-1/8 | |
| (3) for 54" cut, Tank, M54 | **98-091** | 01005337P<br>1005337<br>2005018<br>942-04416 | **19** | 3/4 | | | 3.00/.203 | 7/16 | 1-5/16 | |
| Gator G3 | **96-351** | 02005018-X<br>742-04416-X<br>942-04416-X | 19 | 3/4 | | | 3.00/.203 | 9/16 | 1 | G3 |
| Gator G5 | **596-351** | | 19 | 3/4 | | | 3.00/.203<br>High-Lift Xtended Fusion® | 5/8 | 1 | G5 |

B

## Cub Cadet

| | OREGON | OEM No. | Length | Center | Outer | C to C | W / T | Off | Lift | Prod. Code |
|---|---|---|---|---|---|---|---|---|---|---|
| (2) 98-537 & (2) 98-539 for 38" cut, side discharge, deep deck - 1992 & after | **98-537** | 742-0537 | **19-5/16** | 3/8 | 7/16 | 2-1/2 | 3.00/.149 | 5/16 | 1 | |
| (2) for 38" deck for bagging, (1) 98-044 & (1) 98-043 - 1986 to 1996 in non-bagging operations, right-hand side | **98-044** | 742-0323<br>742-0473<br>742-0473A<br>742-0504<br>742-0504A<br>942-0504<br>942-0504A<br>OEM-742-0473<br>OEM-742-0473A | 19-5/16 | 3/8 | 5/16 | 2-1/2 | 3.00/.149 | 5/16 | 1-3/8 | |
| (2) for 38" cut, sand blade, deep deck 1986-1996 | **98-493** | 742-0493 | 19-5/16 | 3/8 | 5/16 | 2-1/2 | 3.00/.149 | 5/16 | 1-3/16 | |
| (2) for 38" cut, 2130, 2135 | **91-329** | 742-3009<br>759-3817 | **19-3/8** | 3/4 | | | 3.00/.203 | 5/16 | 7/8 | |
| (2) for 38" cut, mulching, 1515, 1525, 213, 2130, 2135, 2146, LT2138 | **91-057** | 742-0321<br>742-0322<br>742-3032<br>759-3829<br>942-0473A | 19-3/8 | 3/4 | 5/16 | 2-1/2 | 2.75/.187 | 5/16 | 1-1/2 | |
| Gator® G3™ | **96-697** | | 19-3/8 | 3/4 | | | 3.00/.203 | 5/16 | 3/4 | G3 |
| 20" cut walk-behind, mulching | **98-066** | 942-0740 | **20** | bow-tie | 5/16 | 2-1/2 | 2.25/.134 | 5/16 | 1-1/8 | |
| 20" cut walk-behind, high-lift | **98-068** | | 20 | bow-tie | 5/16 | 2-1/2 | 2.25/.134 | 5/16 | 13/16 | |
| (3) for a 60" cut, 3660 and Z Force, some Tanks | **91-144** | 01001805<br>01003280<br>01003805<br>01004719<br>01004719P<br>1004719-0637<br>OCC-01004719 | **20-1/2** | 3/4 | | | 3.00/.203 | 1/2 | 1-5/16 | |
| Gator G3 | **96-677** | | 20-1/2 | 3/4 | | | 3.00/.203 | 1/2 | 1 | G3 |

# Blades - OEM Replacements

## Cub Cadet

| | OREGON | OEM No. | Length | Center | Outer | C to C | W / T | Off | Lift | Prod. Code |
|---|---|---|---|---|---|---|---|---|---|---|
| | **98-002** | | **20-15/16** | 13/16 | 3/8 | 2-1/2 | 2.25/.134 | 1/4 | 13/16 | |
| 21" cut, 312R, 313R, 315R, 488, 828, 848, 100, 400, 500, 800 1993 & after, walk-behinds | | | | | | | | | | |
| | **98-007** | 742-0536<br>742-0563<br>742-0721<br>942-0721<br>OEM-742-0721 | 20-15/16 | 13/16 | 3/8 | 2-1/2 | 2.25/.134 | 5/16 | 15/16 | |
| 21" cut, mulching blade for models 312R, 313R, 315R, 488, 828, 848, 100, 400, 500, 800 1993 & after, walk-behinds | | | | | | | | | | |
| | **98-102** | | 20-15/16 | 13/16 | 3/8 | 2-1/2 | 2.50/.134 | 5/16 | 3/4 | G3 |
| Gator® G3™ | | | | | | | | | | |
| | **98-098** | OEM-742-0641 | **21** | bow-tie | 5/16 | 2-1/2 | 2.25/.134 | 1/4 | 13/16 | |
| 21" cut, 5521, CC439, CC46ES, CC46M, CC46MX, CC469, CC94M, CC94M, CC949, CC997ES, CC997ES, CC98, CC98H, CC98K, CC98M, CC989, CC997ES, CC999ES, PR521, SC500, S621, S621S, SC500E, SC500HW, SC500Z, SC621, SC621E, SRC621, SR621, SRE621 | | | | | | | | | | |
| | **198-049** | 490-100-C089<br>490-100-M084<br>742-04276<br>742-04276S<br>742-0741<br>742-0741A<br>942-04276<br>942-0741<br>942-0741A<br>CC-742-0741<br>OEM-742-0741 | 21 | bow-tie | 5/16 | 2-1/2 | 2.25/.134 | 1/4 | 15/16 | Xtended 100 |
| 21" cut, mulching, 5521, CC439, CC46ES, CC46M, CC46MX, CC469, CC94M, CC94M, CC949, CC997ES, CC997ES, CC98, CC98H, CC98K, CC98M, CC989, CC997ES, CC999ES, PR521, SC500, S621, S621S, SC500E, SC500HW, SC500Z, SC621, SC621E, SRC621, SR621, SRE621 | | | | | | | | | | |
| | **98-631** | 742-04380<br>742-04380-0684<br>742-0741A-X<br>742-0741-X<br>942-04380<br>942-04380-0684<br>942-0741A-X<br>942-0741-X | 21 | bow-tie | 5/16 | 2-1/2 | 2.50/.187 | 5/16 | 3/4 | G3 |
| Gator G3 | | | | | | | | | | |
| | **598-631** | | 21 | bow-tie | 5/16 | 2-1/2 | 3.00/.149 | 5/16 | 1 | High-Lift Xtended Fusion® G5 |
| Gator G5™ | | | | | | | | | | |
| | **91-442** | 759-3411<br>759-3839<br>IH-83614-C1 | **21** | 1/2 | | | 2.00/.250 | 7/16 | 1-1/8 | |
| (3) for 60" cut, 325, 374 | | | | | | | | | | |

B

## Cub Cadet

| | OREGON | OEM No. | Length | Center | Outer | C to C | W / T | Off | Lift | Prod. Code |
|---|---|---|---|---|---|---|---|---|---|---|
| (3) for 60" cut, Tank and RECON | **98-071** | 01005338<br>01005338P<br>02005019<br>742-04415<br>942-04415 | **21** | 3/4 | | | 3.00/.203 | 1/2 | 1-5/16 | |
| Gator® G3™ | **96-300** | 02005019-X<br>742-04415-X<br>742-04415-XG<br>942-04415-X | 21 | 3/4 | | | 3.00/.203 | 1/2 | 1 | G3 |
| Gator G5™ | **596-300** | | 21 | 3/4 | | | 3.00/.203 | 1/2 | 1 | High-Lift Xtended Fusion® G5 |
| (2) for 42" cut, RZT-17 | **98-088** | | **21-1/8** | 5/8<br>6 pt. Star | | | 3.00/.164 | 3/8 | 1-5/16 | |
| (2) for 42" cut, LT1042 | **98-090** | 490-110-C119<br>742-04126<br>942-04126<br>OCC-742-04126 | 21-1/8 | 5/8<br>6 pt. Star | | | 2.75/.187 | 1/4 | 1-3/8 | |
| (2) for 42" cut, mulching, LT1042 | **91-058** | 490-110-C129<br>742-04101<br>759-04081<br>759-3830<br>CC-742-3033<br>OCC-742-04101 | **21-1/8** | 3/4 | 5/16 | 2-1/2 | 2.75/.187 | 1/4 | 1-3/8 | |
| Gator G3 | **91-635** | 759-3830-X | 21-1/8 | 3/4 | 5/16 | 2-1/2 | 2.50/.187 | 1/4 | 3/4 | G3 |
| Gator G5 | **591-635** | | 21-1/8 | 3/4 | 5/16 | 2-1/2 | 3.00/.164 | 5/16 | 1 | High-Lift Xtended Fusion® G5 |
| (2) for 42" cut, mulcher, LTX1040, LTX1042, LTX1042KW, LTX1042KH, LTX1045, RZT42, RZT-S42, RZT-L42 | **198-059** | 490-110-C109<br>490-110-C122<br>490-110-M115<br>7420616<br>742-0616<br>742-0616A<br>942-0616 | **21-3/16** | 5/8<br>6 pt. Star | | | 2.75/.149 | 3/8 | 1-1/2 | Xtended 100 |
| | | 942-0616A<br>GW-7420616<br>OCC-742-0616<br>OEM-742-0616 | | | | | | | | |
| (2) for 42" cut, high-lift, LTX1040, LTX1042, LTX1042KW, LTX1042KH, LTX1045, RZT42, RZT-S42, RZT-L42 | **98-093** | 490-110-M108<br>742-04308<br>742-0656<br>942-04308<br>942-0656<br>OCC-742-04312<br>OEM-742-04308 | 21-3/16 | 5/8<br>6 pt. Star | | | 2.75/.149 | 3/8 | 7/8 | |

GROUP CONTINUES

B

# Blades - OEM Replacements

## Cub Cadet

GROUP CONTINUES

| | OREGON | OEM No. | Length | Center | Outer | C to C | W / T | Off | Lift | Prod. Code |
|---|---|---|---|---|---|---|---|---|---|---|
| (2) for 42" cut, LTX1040, LTX1042, LTX1042KW, LTX1042KH, LTX1045, RZT42, RZT-S42, RZT-L42 | **198-153** | 742-04087<br>942-04087 | 21-3/16 | 5/8<br>6 pt. Star | | | 3.00/.149 | 5/16 | 1-1/4 | Xtended — **100** |
| Gator® G3™ | **98-629** | 742-04312<br>742-04360<br>742-04410<br>942-04126-X<br>942-04308-X<br>942-04312<br>942-04312-X<br>942-04360<br>942-04360-0684<br>942-04410<br>942-04410-0684<br>942-0616-X | 21-3/16 | 5/8<br>6 pt. Star | | | 2.50/.187 | 5/16 | 3/4 | **G3** |
| Gator G5™ | **598-629** | | 21-3/16 | 5/8<br>6 pt. Star | | | 3.00/.164 | 5/16 | 1 | High-Lift Xtended Fusion® — **G5** |
| (2) for 42" deck, star center hole, 2-in-1 blade, side discharges and mulches. Fits two-blade 42" lawn tractors and RZT mowers (1997 and newer). For Troy-Bilt, MTD, MTD Gold, Bolens, White Outdoor, Yard Machines, Yard Man, and Huskee lawn tractors | **98-099** NEW | 942-04312 | **21-1/4** | 5/8 | 3/8 | 3 | 2 .50/.138 | 7/16 | 1-1/8 | |
| (2) for 42" cut, lawn tractors | **91-332** | 742-3018<br>759-3824 | **21-1/4** | 3/4 | 5/16 | 2-1/2 | 3.00/.203 | 3/8 | 15/16 | |
| Gator G3 | **96-350** | 742-04374<br>942-04374 | 21-1/4 | 3/4 | 5/16 | 2-1/2 | 2.50/.203 | 3/8 | 1 | **G3** |
| (2) for 46" cut, LTX1045, LTX1046, LTX1046VT | **98-096** | 490-110-C131<br>742-04244<br>742-04244A<br>742-04290<br>942-04244<br>942-04244A<br>942-04290<br>OCC-742-04244 | **23-1/4** | 5/8<br>6 pt. Star | | | 3.75/.149 | 1/4 | 1-3/8 | |
| Gator G3<br>For stamped decks 2012 and older. Not compatible with stamped decks 2013 and newer | **96-401** | 742-04290-X<br>742-04361<br>942-04244A-X<br>942-04244-X<br>942-04361<br>942-04361-0684 | 23-1/4 | 5/8<br>6 pt. Star | | | 3.00/.149 | 1/4 | 1 | **G3** |
| Gator G6®, (3) for 72" cut, Tank | **396-815** | 01007522<br>742-04418<br>742-04418-0637 | **25** | 3/4 | | | 3.00/.250 | 0 | 1 | Heavy-Duty High-Lift Xtended Fusion® — **G6** |

## Dixie Chopper

| | OREGON | OEM No. | Length | Center | Outer | C to C | W / T | Off | Lift | Prod. Code |
|---|---|---|---|---|---|---|---|---|---|---|
| (3) for 42" cut | **91-501** | 30227-42<br>63227<br>63227-N<br>93227H | **14-1/2** | 5/8 | | | 2.50/.203 | 0 | 1-1/16 | |
| | | | | | | | Xtended | | | |
| Gator® G6® | **396-714** | 63227-H | 14-1/2 | 5/8 | | | 3.00/.250 | 0 | 1 | |
| | | | | | | | Heavy-Duty High-Lift Xtended Fusion® | | | G6 |
| (3) for 42" cut, Zee 1 | **92-142** | 300632<br>301067 | **15-1/8** | 1/2 | | | 2.50/.203 | 0 | 1 | |
| Gator G6 | **392-142** | | 15-1/8 | 1/2 | | | 3.00/.250 | 0 | 1 | |
| | | | | | | | Heavy-Duty High-Lift Xtended Fusion® | | | G6 |
| (3) for 50" cut | **91-502** | 30227-50 | **17** | 5/8 | | | 2.50/.203 | 0 | 1-3/16 | |
| | | | | | | | Xtended | | | |
| (3) for 50" cut, high-lift | **91-505** | 30227-50V | 17 | 5/8 | | | 2.50/.250 | 0 | 1-1/8 | |
| | | | | | | | Xtended | | | |
| (3) for 50" cut, new style with rolled air lift | **91-508** | 30227-50H<br>30227-H<br>30227-N | 17 | 5/8 | | | 2.50/.250 | 0 | 1-3/16 | |
| | | | | | | | Xtended | | | |
| (3) for 44" cut, Iron Eagle, Silver Eagle, for 50" classic x-style blade | **91-525** | 30227-50X | 17 | 5/8 | | | 2.50/.250 | 5/16 | 1-3/16 | |
| Gator G3™ | **96-323** | 30227-50E<br>30227-50T | 17 | 5/8 | | | 2.50/.203 | 0 | 1 | |
| | | | | | | | | | | G3 |
| Gator G5™ | **596-323** | | 17 | 5/8 | | | 3.00/.203 | 0 | 1 | |
| | | | | | | | High-Lift Xtended Fusion® | | | G5 |
| Gator G6 | **396-723** | | 17 | 5/8 | | | 3.00/.250 | 0 | 1 | |
| | | | | | | | Heavy-Duty High-Lift Xtended Fusion® | | | G6 |
| (3) for 48" cut, Zee 1 | **92-141** | 300819<br>301068 | **17-1/4** | 1/2 | | | 2.50/.203 | 0 | 1 | |
| Gator G6 | **392-141** | | 17-1/4 | 1/2 | | | 3.00/.250 | 0 | 1 | |
| | | | | | | | Heavy-Duty High-Lift Xtended Fusion® | | | G6 |

B

# Blades - OEM Replacements

## Dixie Chopper

| | OREGON | OEM No. | Length | Center | Outer | C to C | W / T | Off | Lift | Prod. Code |
|---|---|---|---|---|---|---|---|---|---|---|
| (3) for 52" cut | **92-044** | | **17-7/8** | 5/8 | | | 2.50/.203 | 0 | 1-1/16 | Xtended |
| (3) for 52" cut, low-lift | **90-206** | | 17-7/8 | 5/8 | | | 2.50/.203 | 0 | 13/16 | |
| Gator® G3™ | **96-318** | 30227-52T<br>30227-52X | 17-7/8 | 5/8 | | | 2.50/.203 | 0 | 3/4 | G3 |
| Gator G5™ | **596-704** | | 17-7/8 | 5/8 | | | 3.00/.203 | 0 | 1 | High-Lift Xtended Fusion® G5 |
| Gator G6® | **396-704** | | 17-7/8 | 5/8 | | | 3.00/.250 | 0 | 1 | Heavy-Duty High-Lift Xtended Fusion® G6 |
| (3) for 62" cut | **94-029** | | **20** | 5/8 | | | 2.50/.250 | 3/16 | 1 | |
| Gator G3 | **94-620** | 30227-56T<br>30227-56X | 20 | 5/8 | | | 2.50/.203 | 3/16 | 3/4 | G3 |
| (3) for 60" cut | **91-503** | 30227-60 | **20-1/2** | 5/8 | | | 2.50/.203 | 0 | 1-3/16 | Xtended |
| (3) for 60" cut, high-lift | **91-506** | 30227-60V | 20-1/2 | 5/8 | | | 2.50/.250 | 0 | 1-3/16 | Xtended |
| (3) for 60" cut, low-lift | **91-378** | | 20-1/2 | 5/8 | | | 2.50/.203 | 0 | 5/8 | |
| (3) for 60" cut, mulching | **91-311** | | 20-1/2 | 5/8 | | | 2.50/.203 | 0 | 1 | Xtended |
| (3) for 60" cut, new style with rolled air lift | **91-509** | 30227-60H | 20-1/2 | 5/8 | | | 2.50/.250 | 0 | 1-1/8 | Xtended |
| (3) for 60" cut, classic x-style blade | **91-527** | 30227-60X | 20-1/2 | 5/8 | | | 2.50/.250 | 5/16 | 1-3/16 | |
| (3) for 60" cut | **90-109** | A30227-60N | 20-1/2 | 5/8 | | | 3.00/.250 | 0 | 1-3/16 | Xtended |

GROUP CONTINUES

B

## Dixie Chopper

| | OREGON | OEM No. | Length | Center | Outer | C to C | W / T | Off | Lift | Prod. Code |
|---|---|---|---|---|---|---|---|---|---|---|
| | | | GROUP CONTINUES | | | | | | | |
| (3) for 60" cut | **91-253** | | 20-1/2 | 5/8 | | | 2.50/.250 | 0 | 1-1/8 | |
| (3) for 60" cut | **91-264** | | 20-1/2 | 5/8 | | | 2.50/.203 | 0 | 1 | |
| | | | | | | | Xtended | | | |
| (3) for 60" cut | **92-037** | | 20-1/2 | 5/8 | | | 2.50/.203 | 0 | 1-1/16 | |
| | | | | | | | Xtended | | | |
| (3) for 60" cut | **92-038** | | 20-1/2 | 5/8 | | | 2.50/.203 | 0 | 13/16 | |
| | | | | | | | Xtended | | | |
| (3) for 60" cut | **94-055** | | 20-1/2 | 5/8 | | | 2.50/.250 | 0 | 1 | |
| Gator® G3™ | **96-319** | 30227-60E<br>30227-60T | 20-1/2 | 5/8 | | | 2.50/.203 | 0 | 3/4 | G3 |
| Gator G5™ | **596-319** | | 20-1/2 | 5/8 | | | 3.00/.203 | 0 | 1 | |
| | | | | | | | High-Lift Xtended Fusion® | | | G5 |
| Gator G6® | **396-740** | | 20-1/2 | 5/8 | | | 3.00/.250 | 0 | 1 | |
| | | | | | | | Heavy-Duty High-Lift Xtended Fusion® | | | G6 |
| (3) for 66" cut, all models | **91-528** | 30227-66X | **23-5/16** | 5/8 | | | 2.50/.250 | 5/16 | 1-3/16 | |
| | | | | | | | Xtended | | | |
| Gator G6 | **396-524** | 30227-66E<br>30227-66T | 23-5/16 | 5/8 | | | 3.00/.250 | 0 | 1 | |
| | | | | | | | Heavy-Duty High-Lift Xtended Fusion® | | | G6 |
| (3) for 72" cut, high-lift, all models | **91-507** | 30227-72H | **24-1/16** | 5/8 | | | 2.50/.250 | 0 | 1-1/8 | |
| | | | | | | | Xtended | | | |
| (3) for 72" cut, all models | **91-515** | 30227-72N | 24-1/16 | 5/8 | | | 3.00/.250 | 0 | 1-1/8 | |
| | | | | | | | Xtended | | | |
| Gator G5 | **596-752** | | 24-1/16 | 5/8 | | | 3.00/.203 | 0 | 1 | |
| | | | | | | | High-Lift Xtended Fusion® | | | G5 |
| Gator G6 | **396-752** | 30227-72T<br>30227-72X | 24-1/16 | 5/8 | | | 3.00/.250 | 0 | 1 | |
| | | | | | | | Heavy-Duty High-Lift Xtended Fusion® | | | G6 |

B

# Blades - OEM Replacements

## Dixie Chopper

| | OREGON | OEM No. | Length | Center | Outer | C to C | W / T | Off | Lift | Prod. Code |
|---|---|---|---|---|---|---|---|---|---|---|
| (3) for 74", XCaliber x-style blade | **91-526** | 30227-74X | **26** | 5/8 | | | 2.50/.250 | 5/16 | 1-3/16 | |
| | | | | | | | Xtended | | | |
| Gator® G6® | **391-526** | 30227-74T | 26 | 5/8 | | | 3.00/.250 | 5/16 | 1 | |
| | | | | | | | Heavy-Duty High-Lift Xtended Fusion® | | | G6 |

## Dixon

| | | | | | | | | | | |
|---|---|---|---|---|---|---|---|---|---|---|
| (3) for 42" cut, 1, 2, 3, 421, 422, 423, 424, 426 | **91-500** | 13939<br>13940<br>6092 | **14-1/2** | 11/16 | | | 2.00/.203 | 0 | 13/16 | |
| (3) for 42" cut, high-lift | **91-167** | 13920<br>13938<br>539119838<br>539119853<br>539126275<br>539129683<br>539129700<br>8688 | 14-1/2 | 11/16 | | | 2.50/.187 | 0 | 1-1/4 | |
| Gator G3™ | **96-303** | 13942<br>575139201<br>6236<br>6896 | 14-1/2 | 11/16 | | | 2.50/.203 | 0 | 1 | G3 |
| Gator G5™ | **596-303** | | 14-1/2 | 11/16 | | | 3.00/.203 | 0 | 1 | |
| | | | | | | | High-Lift Xtended Fusion® | | | G5 |
| (3) for 42" cut | **95-084** | 539112078 | **14-5/8** | 5 pt. Star | | | 2.50/.203 | 0 | 1 | |
| Gator G3 | **95-088** | | 14-5/8 | 5 pt. Star | | | 2.50/.203 | 0 | 3/4 | G3 |
| Gator G5 | **595-088** | | 14-5/8 | 5 pt. Star | | | 3.00/.164 | 0 | 1 | |
| | | | | | | | High-Lift Xtended Fusion® | | | G5 |
| (3) for 44" cut, high-lift, Ram | **491-530** | 13867<br>13918<br>13943<br>17279<br>539119836 | **14-15/16** | 11/16 | | | 2.50/.203 | 0 | 1-1/4 | |
| | | | | | | | Xtended Fusion® | | | |
| Gator® G3™ | **496-399** | 13944<br>13945<br>13947<br>17280<br>17281<br>539119862 | 14-15/16 | 11/16 | | | 2.50/.203 | 0 | 3/4 | |
| | | | | | | | Xtended Fusion® | | | G3 |

B

## Dixon

| | OREGON | OEM No. | Length | Center | Outer | C to C | W / T | Off | Lift | Prod. Code |
|---|---|---|---|---|---|---|---|---|---|---|
| (3) for 44" cut | **91-369** | 10710 | **15-1/4** | 5/8 | | | 2.50/.203 | 0 | 1 | |
| | | | | | | | Xtended | | | |
| (3) for 44" cut, mulching | **91-373** | | 15-1/4 | 5/8 | | | 2.50/.203 | 0 | 1 | |
| | | | | | | | Xtended | | | |
| Gator G3 | **96-327** | 10708 | 15-1/4 | 5/8 | | | 2.50/.203 | 0 | 1 | |
| | | | | | | | Xtended | | | G3 |
| Gator G5™ | **596-327** | | 15-1/4 | 5/8 | | | 3.00/.203 | 0 | 1 | |
| | | | | | | | High-Lift Xtended Fusion® | | | G5 |
| (3) for 48" cut | **99-127** | 539106040 | **16-1/4** | 5/8 | | | 2.50/.203 | 0 | 1-1/16 | |
| (3) for 48" cut | **91-183** | | 16-1/4 | 5/8 | | | 2.50/.250 | 0 | 1 | |
| (3) for 48" cut | **91-180** | | 16-1/4 | 5/8 | | | 2.50/.187 | 0 | 1 | |
| (3) for 48" cut | **91-313** | | 16-1/4 | 5/8 | | | 2.50/.203 | 0 | 1 | |
| (3) for 48" cut, mulching | **91-368** | | 16-1/4 | 5/8 | | | 2.50/.203 | 0 | 1 | |
| | | | | | | | Xtended | | | |
| Gator G3 | **96-310** | | 16-1/4 | 5/8 | | | 2.50/.203 | 0 | 3/4 | G3 |
| Gator G5 | **596-310** | | 16-1/4 | 5/8 | | | 3.00/.203 | 0 | 1 | |
| | | | | | | | High-Lift Xtended Fusion® | | | G5 |
| (3) for 48" cut, Ram 48 | **95-087** | 539113425<br>575296401 | **16-1/4** | 5 pt. Star | | | 2.50/.203 | 0 | 1 | |
| Gator® G5™ | **595-087** | | 16-1/4 | 5 pt. Star | | | 3.00/.164 | 0 | 1 | |
| | | | | | | | High-Lift Xtended Fusion® | | | G5 |

B

# Blades - OEM Replacements

## Dixon

| | OREGON | OEM No. | Length | Center | Outer | C to C | W / T | Off | Lift | Prod. Code |
|---|---|---|---|---|---|---|---|---|---|---|
| (3) for 48" cut | **91-620** | 11645<br>539100340 | **16-1/2** | 5/8 | | | 2.50/.203 | 0 | 1 | |
| | | | | | | | Xtended | | | |
| (3) for 48" cut, high-lift, Fas Trak, Sport, X-One | **92-737** | | 16-1/2 | 5/8 | | | 2.50/.203 | 0 | 1-1/16 | |
| | | | | | | | Xtended | | | |
| (3) for 48" cut, mulching, Fas Trak, Sport, X-One | **92-743** | | 16-1/2 | 5/8 | | | 2.50/.203 | 0 | 1 | |
| | | | | | | | Xtended | | | |
| (3) for 48" cut | **92-207** | | 16-1/2 | 5/8 | | | 2.50/.203 | 0 | 13/16 | |
| | | | | | | | Xtended | | | |
| (3) for 48" cut | **91-621** | | 16-1/2 | 5/8 | | | 3.00/.203 | 0 | 1-1/2 | |
| (3) for 48" cut | **92-145** | | 16-1/2 | 5/8 | | | 2.50/.203 | 0 | 1 | |
| (3) for 48" cut | **99-126** | | 16-1/2 | 5/8 | | | 2.50/.203 | 0 | 1-1/16 | |
| Gator G3™ | **96-308** | | 16-1/2 | 5/8 | | | 2.50/.203 | 0 | 1 | G3 |
| Gator G5 | **596-308** | | 16-1/2 | 5/8 | | | 3.00/.203 | 0 | 1 | |
| | | | | | | | High-Lift Xtended Fusion® | | | G5 |
| Gator G6® | **396-735** | | 16-1/2 | 5/8 | | | 3.00/.250 | 0 | 1 | |
| | | | | | | | Heavy-Duty High-Lift Xtended Fusion® | | | G6 |
| (3) for 48" cut | **195-062** | 532180054 | **16-11/16** | 5 pt. Star | 5/16 | 3-15/16 | 2.50/.203 | 0 | 1-1/4 | |
| | | | | | | | Xtended | | | 100 |
| (3) for 48" cut, mulching | **95-068** | | 16-11/16 | 5 pt. Star | | | 2.50/.203 | 5/16 | 13/16 | |
| | | | | | | | Xtended | | | |
| Gator® G3™ | **96-615** | | 16-11/16 | 5 pt. Star | | | 2.50/.203 | 0 | 1 | G3 |
| Gator G5™ | **596-615** | | 16-11/16 | 5 pt. Star | | | 3.00/.187 | 0 | 1 | |
| | | | | | | | High-Lift Xtended Fusion® | | | G5 |

B

## Dixon

| | OREGON | OEM No. | Length | Center | Outer | C to C | W / T | Off | Lift | Prod. Code |
|---|---|---|---|---|---|---|---|---|---|---|
| (3) for 48" cut, high-lift | **91-123** | | **16-15/16** | 1/2 | | | 2.50/.203 | 5/16 | 1-5/16 | |
| (3) for 48" cut, low-lift | **91-126** | 60292 | 16-15/16 | 1/2 | | | 2.50/.203 | 5/16 | 3/4 | |
| Gator G3 | **99-617** | 539129860<br>60460 | 16-15/16 | 1/2 | | | 2.50/.203 | 5/16 | 3/4 | G3 |
| (3) for 48" cut, high-lift | **92-160** | 539127977<br>60296 | **16-15/16** | 5/8 | | | 2.50/.203 | 5/16 | 1-1/4 | |
| (3) for 48" cut, low-lift | **92-161** | | 16-15/16 | 5/8 | | | 2.50/.203 | 5/16 | 3/4 | |
| Gator G5 | **592-160** | | 16-15/16 | 5/8 | | | 3.00/.187 | 5/16 | 1 | High-Lift Xtended Fusion® G5 |
| (3) for 50" cut | **91-508** | 539126431<br>9258<br>9265 | **17** | 5/8 | | | 2.50/.250 | 0 | 1-3/16 | Xtended |
| (3) for 50" cut, high-lift | **91-505** | | 17 | 5/8 | | | 2.50/.250 | 0 | 1-1/8 | Xtended |
| (3) for 50" cut | **91-502** | | 17 | 5/8 | | | 2.50/.203 | 0 | 1-3/16 | Xtended |
| Gator® G3™ | **96-323** | | 17 | 5/8 | | | 2.50/.203 | 0 | 1 | G3 |
| Gator G5™ | **596-323** | | 17 | 5/8 | | | 3.00/.203 | 0 | 1 | High-Lift Xtended Fusion® G5 |
| Gator G6® | **396-723** | | 17 | 5/8 | | | 3.00/.250 | 0 | 1 | Heavy-Duty High-Lift Xtended Fusion® G6 |
| (3) for 50" cut, high-lift, 1950, 2300, 4515B, 4516K, 4518K, Grizzly, Kodiak, Ram, ZTR(1001, 4423, 4425, 4426, 4515B, 4516K, 4518K, 5004, 5005, 5017, 5020, 5022, 5023, 5024, 5502) | **91-146** | 13919<br>539117174<br>539119863<br>9444 | **17** | 11/16 | | | 2.50/.187 | 0 | 1-1/4 | |

GROUP CONTINUES

# Blades - OEM Replacements

## Dixon

| | OREGON | OEM No. | Length | Center | Outer | C to C | W / T | Off | Lift | Prod. Code |
|---|---|---|---|---|---|---|---|---|---|---|
| | | | GROUP CONTINUES | | | | | | | |
| Gator G3 | **90-669** | 13948<br>13949<br>13950<br>13952<br>13955<br>6897<br>9443 | 17 | 11/16 | | | 2.50/.203 | 0 | 3/4 | G3 |
| Gator G5 | **590-669** | | 17 | 11/16 | | | 3.00/.203 | 0 | 1 | High-Lift Xtended Fusion® G5 |
| (3) for 52" cut | **91-256** | 539105712 | **18** | 5/8 | | | 2.50/.203 | 0 | 1 | Xtended |
| (3) for 52" cut, high-lift | **91-623** | | 18 | 5/8 | | | 3.00/.203 | 0 | 1-1/2 | Xtended |
| (3) for 52" cut, mulching | **91-218** | | 18 | 5/8 | | | 2.50/.164 | 0 | 1 | Xtended |
| (3) for 52" cut | **91-622** | | 18 | 5/8 | | | 2.50/.203 | 0 | 1 | Xtended |
| (3) for 52" cut | **91-181** | | 18 | 5/8 | | | 2.50/.187 | 0 | 1 | Xtended |
| (3) for 52" cut | **91-184** | | 18 | 5/8 | | | 2.50/.250 | 0 | 1 | Xtended |
| (3) for 52" cut | **91-312** | | 18 | 5/8 | | | 2.50/.203 | 0 | 1 | Xtended |
| (3) for 52" cut | **91-335** | | 18 | 5/8 | | | 2.50/.203 | 0 | 1 | Xtended |
| (3) for 52" cut | **94-053** | | 18 | 5/8 | | | 2.50/.250 | 0 | 1 | |
| Gator® G3™ | **96-344** | | 18 | 5/8 | | | 2.50/.203 | 0 | 3/4 | G3 |
| Gator G5™ | **596-344** | | 18 | 5/8 | | | 3.00/.203 | 0 | 1 | High-Lift Xtended Fusion® G5 |
| Gator G6® | **396-726** | | 18 | 5/8 | | | 3.00/.250 | 0 | 1 | Heavy-Duty High-Lift Xtended Fusion® G6 |

B

## Dixon

| | OREGON | OEM No. | Length | Center | Outer | C to C | W / T | Off | Lift | Prod. Code |
|---|---|---|---|---|---|---|---|---|---|---|
| (3) for 50 & 52" cut, Kodiak, Ram, Ultra | **95-085** | 10782<br>10881<br>510417801<br>539117911<br>539117973 | **18** | 5 pt. Star | | | 2.50/.203 | 0 | 1 | |
| Gator G5 | **595-085** | | 18 | 5 pt. Star | | | 3.00/.164 | 0 | 1 | G5 |
| | | | | | | | High-Lift Xtended Fusion® | | | |
| (2) for 36" cut | **91-622** | 11633<br>539100341 | **18** | 5/8 | | | 2.50/.203 | 0 | 1 | |
| | | | | | | | Xtended | | | |
| (2) for 36" cut, high-lift | **91-623** | | 18 | 5/8 | | | 3.00/.203 | 0 | 1-1/2 | |
| | | | | | | | Xtended | | | |
| (2) for 36" cut, low-lift | **91-235** | | 18 | 5/8 | | | 2.50/.250 | 0 | 7/8 | |
| | | | | | | | Xtended | | | |
| (2) for 36" cut, mulching | **91-218** | | 18 | 5/8 | | | 2.50/.164 | 0 | 1 | |
| | | | | | | | Xtended | | | |
| (2) for 36" cut | **91-181** | | 18 | 5/8 | | | 2.50/.187 | 0 | 1 | |
| | | | | | | | Xtended | | | |
| (2) for 36" cut | **91-184** | | 18 | 5/8 | | | 2.50/.250 | 0 | 1 | |
| | | | | | | | Xtended | | | |
| (2) for 36" cut | **91-256** | | 18 | 5/8 | | | 2.50/.203 | 0 | 1 | |
| | | | | | | | Xtended | | | |
| (2) for 36" cut | **91-312** | | 18 | 5/8 | | | 2.50/.203 | 0 | 1 | |
| | | | | | | | Xtended | | | |
| (2) for 36" cut | **91-335** | | 18 | 5/8 | | | 2.50/.203 | 0 | 1 | |
| | | | | | | | Xtended | | | |
| (2) for 36" cut | **94-053** | | 18 | 5/8 | | | 2.50/.250 | 0 | 1 | |
| Gator® G3™ | **96-344** | 10715 | 18 | 5/8 | | | 2.50/.203 | 0 | 3/4 | G3 |

GROUP CONTINUES

B

# Blades - OEM Replacements

## Dixon

GROUP CONTINUES

| | OREGON | OEM No. | Length | Center | Outer | C to C | W / T | Off | Lift | Prod. Code |
|---|---|---|---|---|---|---|---|---|---|---|
| Gator G5™ | **596-344** | | 18 | 5/8 | | | 3.00/.203 | 0 | 1 | High-Lift Xtended Fusion® G5 |
| Gator G6® | **396-726** | | 18 | 5/8 | | | 3.00/.250 | 0 | 1 | Heavy-Duty High-Lift Xtended Fusion® G6 |
| (3) for 52" cut | **91-129** | | **18-3/8** | 1/2 | | | 2.50/.203 | 5/16 | 1-1/4 | |
| Gator G3 | **96-129** | 539128189<br>539128819<br>60645<br>61656<br>61695 | 18-3/8 | 1/2 | | | 2.50/.203 | 5/16 | 3/4 | G3 |
| (3) for 54" cut | **195-072** | 532187756 | **18-7/16** | 5 pt. Star | 5/16 | 3-15/16 | 2.75/.187 | 1/2 | 1-3/16 | Xtended 100 |
| (3) for 54" cut, mulching | **95-082** | | 18-7/16 | 5 pt. Star | | | 2.50/.187 | 5/16 | 13/16 | |
| Gator G3 | **95-605** | | 18-7/16 | 5 pt. Star | | | 2.50/.187 | 1/2 | 3/4 | G3 |
| Gator G5 | **595-605** | | 18-7/16 | 5 pt. Star | | | 3.00/.164 | 1/2 | 1 | High-Lift Xtended Fusion® G5 |
| Low lift version of 91-714 | **91-713** | | **18-1/2** | 3/4 | 3/8 | 2-9/16 | 2.00/.187 | 0 | 3/4 | |
| (1) LH side for 63" cut model 361 with catcher | **91-714** | 1352<br>539115245 | 18-1/2 | 3/4 | 3/8 | 2-9/16 | 2.50/.164 | 0 | 1-5/16 | |
| (2) for 36" cut | **99-133** | | **18-1/2** | 3/4 | | | 2.50/.203 | 0 | 1-1/8 | |
| Gator G3 | **96-133** | 11913<br>11914<br>11949<br>539118672<br>539118673 | 18-1/2 | 3/4 | | | 2.50/.203 | 0 | 3/4 | G3 |
| Gator G5™ | **599-133** | | 18-1/2 | 3/4 | | | 3.00/.203 | 0 | 1 | High-Lift Xtended Fusion® G5 |

## Dixon

| | OREGON | OEM No. | Length | Center | Outer | C to C | W / T | Off | Lift | Prod. Code |
|---|---|---|---|---|---|---|---|---|---|---|
| (3) for 54" cut | **95-092** | 575265901 | **19** | 5/8 | | | 2.50/.250 | 0 | 1 | |
| (2) for 38" cut | **195-033** | | **19-1/4** | 5 pt. Star | 3/8 | 3-1/8 | 2.25/.134 | 1/8 | 1-1/16 | Xtended 100 |
| (2) for 38" cut, heavy-duty version of 195-033 | **95-038** | | 19-1/4 | 5 pt. Star | | | 2.25/.187 | 1/8 | 1-1/16 | |
| (2) for 38" cut, high-lift | **95-047** | 13925<br>13932<br>539119842<br>539119849 | 19-1/4 | 5 pt. Star | | | 2.25/.187 | 0 | 1 | |
| (2) for 38" cut, mulching | **195-003** | | 19-1/4 | 5 pt. Star | 5/16 | 3-1/8 | 2.25/.134 | 1/8 | 7/8 | Xtended 100 |
| (2) for 38" cut, heavy-duty version of 195-003 | **95-099** | | 19-1/4 | 5 pt. Star | | | 2.25/.149 | 1/8 | 1 | |
| Gator® G3™ | **95-601** | 13933<br>539119860 | 19-1/4 | 5 pt. Star | | | 2.50/.187 | 0 | 3/4 | G3 |
| Gator G5™ | **595-601** | | 19-1/4 | 5 pt. Star | | | 3.00/.164 | 0 | 1 | High-Lift Xtended Fusion® G5 |
| (3) for 60" cut, model 8025 | **91-253** | 12421<br>13922<br>13956<br>539119871<br>9383 | **20-1/2** | 5/8 | | | 2.50/.250 | 0 | 1-1/8 | |
| (3) for 60" cut, high-lift | **92-037** | | 20-1/2 | 5/8 | | | 2.50/.203 | 0 | 1-1/16 | Xtended |
| (3) for 60" cut, low-lift | **92-038** | | 20-1/2 | 5/8 | | | 2.50/.203 | 0 | 13/16 | Xtended |
| (3) for 60" cut, mulching | **91-311** | | 20-1/2 | 5/8 | | | 2.50/.203 | 0 | 1 | Xtended |
| (3) for 60" cut, Super Z, Z, XR-7 deck | **90-109** | | 20-1/2 | 5/8 | | | 3.00/.250 | 0 | 1-3/16 | Xtended |

GROUP CONTINUES

B

# Blades - OEM Replacements

## Dixon

| | OREGON | OEM No. | Length | Center | Outer | C to C | W / T | Off | Lift | Prod. Code |
|---|---|---|---|---|---|---|---|---|---|---|
| | | | GROUP CONTINUES | | | | | | | |
| (3) for 60" cut | **91-264** | | 20-1/2 | 5/8 | | | 2.50/.203 | 0 | 1 | |
| | | | | | | | Xtended | | | |
| (3) for 60" cut | **91-378** | | 20-1/2 | 5/8 | | | 2.50/.203 | 0 | 5/8 | |
| (3) for 60" cut | **91-503** | | 20-1/2 | 5/8 | | | 2.50/.203 | 0 | 1-3/16 | |
| | | | | | | | Xtended | | | |
| (3) for 60" cut | **91-506** | | 20-1/2 | 5/8 | | | 2.50/.250 | 0 | 1-3/16 | |
| | | | | | | | Xtended | | | |
| (3) for 60" cut | **91-509** | | 20-1/2 | 5/8 | | | 2.50/.250 | 0 | 1-1/8 | |
| | | | | | | | Xtended | | | |
| (3) for 60" cut | **94-055** | | 20-1/2 | 5/8 | | | 2.50/.250 | 0 | 1 | |
| Gator® G3™ | **96-319** | 12451<br>12508<br>13368<br>13869<br>13870<br>13921<br>13957<br>13958<br>13960 | 20-1/2 | 5/8 | | | 2.50/.203 | 0 | 3/4 | G3 |
| Gator G5™ | **596-319** | | 20-1/2 | 5/8 | | | 3.00/.203 | 0 | 1 | |
| | | | | | | | High-Lift Xtended Fusion® | | | G5 |
| Gator G6® | **396-740** | | 20-1/2 | 5/8 | | | 3.00/.250 | 0 | 1 | |
| | | | | | | | Heavy-Duty High-Lift Xtended Fusion® | | | G6 |
| (3) for 60" cut, high-lift | **91-128** | | **20-15/16** | 1/2 | | | 2.50/.203 | 5/16 | 1-1/4 | |
| (3) for 60" cut, low-lift | **91-127** | 539127975<br>60293 | 20-15/16 | 1/2 | | | 2.50/.203 | 5/16 | 3/4 | |
| Gator G3 | **99-615** | 60461 | 20-15/16 | 1/2 | | | 2.50/.203 | 5/16 | 3/4 | G3 |

B

## Dixon

| OREGON | OEM No. | Length | Center | Outer | C to C | W / T | Off | Lift | Prod. Code |
|---|---|---|---|---|---|---|---|---|---|
| **195-032** | 532138971 | **21** | 5 pt. Star | | | 2.25/.149 | 1/8 | 1-1/16 | Xtended 100 |
| (2) for 42" cut | | | | | | | | | |
| **195-039** | | 21 | 5 pt. Star | 5/16 | 3-1/8 | 2.25/.187 | 1/8 | 1-1/18 | Xtended 100 |
| (2) for 42" cut, heavy-duty version of 195-032 | | | | | | | | | |
| **195-048** | 510417901 | 21 | 5 pt. Star | 5/16 | 3-1/8 | 2.25/.187 | 0 | 3/4 | Xtended 100 |
| (2) for 42" cut, sand | | | | | | | | | |
| **195-005** | | 21 | 5 pt. Star | | | 2.25/.134 | 1/8 | 7/8 | Xtended 100 |
| (2) for 42" cut, mulching | | | | | | | | | |
| **195-019** | 532134149 | 21 | 5 pt. Star | | | 2.25/.149 | 1/8 | 15/16 | Xtended 100 |
| (2) for 42" cut, heavy-duty version of 195-005 | | | | | | | | | |
| **95-086** | 13926<br>539119843 | 21 | 5 pt. Star | | | 2.50/.203 | 0 | 1.000 | |
| (2) for 42" cut | | | | | | | | | |
| **96-900** | 539118038<br>539119852 | 21 | 5 pt. Star | | | 2.50/.187 | 0 | 3/4 | G3 |
| Gator® G3™ | | | | | | | | | |
| **596-900** | | 21 | 5 pt. Star | | | 3.00/.164 | 0 | 1 | High-Lift Xtended Fusion® G5 |
| Gator G5™ | | | | | | | | | |
| **95-078** | 539105711 | **21** | 5/8 | | | 2.50/.250 | 0 | 1 | |
| (3) for 60" cut | | | | | | | | | |
| **91-628** | | 21 | 5/8 | | | 3.00/.203 | 0 | 1-1/2 | Xtended |
| (3) for 60" cut, high-lift | | | | | | | | | |
| **91-596** | | 21 | 5/8 | | | 2.50/.203 | 0 | 1 | |
| (3) for 61" cut, mulching | | | | | | | | | |
| **91-308** | | 21 | 5/8 | | | 2.50/.203 | 0 | 1 | |
| (3) for 60" cut | | | | | | | | | |
| **91-209** | | 21 | 5/8 | | | 2.50/.250 | 0 | 1 | Xtended |
| (3) for 60" cut | | | | | | | | | |
| **91-626** | | 21 | 5/8 | | | 2.50/.203 | 0 | 1 | |
| (3) for 60" cut | | | | | | | | | |

GROUP CONTINUES

B

# Blades - OEM Replacements

## Dixon

| | OREGON | OEM No. | Length | Center | Outer | C to C | W / T | Off | Lift | Prod. Code |
|---|---|---|---|---|---|---|---|---|---|---|
| | | | GROUP CONTINUES | | | | | | | |
| (3) for 60" cut | **91-638** | | 21 | 5/8 | | | 2.50/.203 | 0 | 1 | |
| Gator® G3™ | **96-347** | 522829301<br>522936601<br>539109755<br>574481301 | 21 | 5/8 | | | 2.50/.203 | 0 | 3/4 | G3 |
| Gator G5™ | **596-347** | | 21 | 5/8 | | | 3.00/.203 | 0 | 1 | High-Lift Xtended Fusion® G5 |
| Gator G6® | **396-727** | | 21 | 5/8 | | | 3.00/.250 | 0 | 1 | Heavy-Duty High-Lift Xtended Fusion® G6 |
| 21" cut, walk-behind | **95-057** | 532106712 | **21** | 5/8 | 3/8 | 1-7/8 | 2.75/.134 | 1/2 | 1-9/16 | |
| 21" cut, walk-behind | **95-071** | | 21 | 5/8 | 3/8 | 1-7/8 | 2.75/.134 | 1/2 | 1-1/8 | |
| 21" cut, walk-behind, mulching | **195-067** | | 21 | 5/8 | 3/8 | 1-7/8 | 2.25/.134 | 9/16 | 1-1/16 | Xtended 100 |
| Gator® G3™ | **95-621** | | 21 | 5/8 | 3/8 | 1-7/8 | 2.50/.187 | 1/2 | 3/4 | G3 |
| Gator G5™ | **595-621** | | 21 | 5/8 | 3/8 | 1-7/8 | 3.00/.149 | 1/2 | 1 | High-Lift Xtended Fusion® G5 |
| 22" Walk behind D149F22 and D160H22 | **95-076** | 420463<br>421825<br>532420463<br>532421825<br>532437601<br>917532420463<br>917532421825 | **21-15/16** | 5 pt. Star | | | 2.25/.134 | 9/16 | 13/16 | |
| Gator G3 | **95-615** | 580244001<br>585587701 | 21-15/16 | 5 pt. Star | | | 2.25/.134 | 9/16 | 3/4 | G3 |

B

## Dixon

| OREGON | OEM No. | Length | Center | Outer | C to C | W / T | Off | Lift | Prod. Code |
|---|---|---|---|---|---|---|---|---|---|
| **195-070** (2) for 46" cut, high-lift | 532405380 | **22-7/8** | 5 pt. Star | 5/16 | 3-15/16 | 2.75/.164 | 5/16 | 1-1/8 | Xtended — 100 |
| **95-074** (2) for 46" cut, mulching | | 22-7/8 | 5 pt. Star | | | 2.25/.149 | 1/8 | 15/16 | Xtended |
| **96-370** Gator G3 | | 22-7/8 | 5 pt. Star | | | 2.75/.187 | 1/4 | 3/4 | Xtended — G3 |
| **596-370** Gator G5 | | 22-7/8 | 5 pt. Star | | | 3.00/.187 | 5/16 | 1 | High-Lift Xtended Fusion® — G5 |
| **91-627** (3) for 72" cut | 12339<br>13923<br>13961<br>539118957<br>539119841<br>539119876 | **24-1/2** | 5/8 | | | 2.50/.203 | 0 | 1 | Xtended |
| **92-035** (3) for 72" cut, high-lift | | 24-1/2 | 5/8 | | | 3.00/.250 | 0 | 1-3/16 | |
| **96-341** Gator® G3™ | 12452<br>12509<br>13871<br>13962<br>13963<br>13998<br>539119802<br>539119877<br>539119909 | 24-1/2 | 5/8 | | | 2.50/.203 | 0 | 3/4 | G3 |
| **596-341** Gator G5™ | | 24-1/2 | 5/8 | | | 3.00/.203 | 0 | 1 | High-Lift Xtended Fusion® — G5 |
| **396-764** Gator G6® | | 24-1/2 | 5/8 | | | 3.00/.250 | 0 | 1 | Heavy-Duty High-Lift Xtended Fusion® — G6 |
| **91-609** (3) for 72" cut | | **25** | 5/8 | | | 2.50/.250 | 0 | 1 | |
| **396-731** Gator G6 | 539105476 | 25 | 5/8 | | | 3.00/.250 | 0 | 1 | Heavy-Duty High-Lift Xtended Fusion® — G6 |

B

# Blades - OEM Replacements

## Dixon

| | OREGON | OEM No. | Length | Center | Outer | C to C | W / T | Off | Lift | Prod. Code |
|---|---|---|---|---|---|---|---|---|---|---|
| (1) for 30" cut | **595-807** | 532419274 | **29-5/8** | 5 pt. Star | | | 3.00/.149 | 5/16 | 1 | G5 High-Lift Xtended Fusion® |
| Gator G3, 30" cut | **96-631** | 2483<br>2484<br>539119844<br>539119845<br>539119846<br>6894 | **29-15/16** | 11/16 | | | 2.75/.203 | 9/16 | 3/4 | G3 |

## DR

| | | | | | | | | | | |
|---|---|---|---|---|---|---|---|---|---|---|
| (3) for 48" cut, Versa Pro Z | **91-620** | 152871 | **16-1/2** | 5/8 | | | 2.50/.203 | 0 | 1 | Xtended |
| (3) for 48" cut, Versa Pro Z, high-lift | **91-621** | | 16-1/2 | 5/8 | | | 3.00/.203 | 0 | 1-1/2 | |
| (3) for 48" cut, Versa Pro Z, mulching | **92-743** | | 16-1/2 | 5/8 | | | 2.50/.203 | 0 | 1 | Xtended |
| (3) for 48" cut, Versa Pro Z | **92-145** | | 16-1/2 | 5/8 | | | 2.50/.203 | 0 | 1 | |
| (3) for 48" cut, Versa Pro Z | **92-036** | | 16-1/2 | 5/8 | | | 2.50/.250 | 0 | 1 | |
| (3) for 48" cut, Versa Pro Z | **92-737** | | 16-1/2 | 5/8 | | | 2.50/.203 | 0 | 1-1/16 | Xtended |
| (3) for 48" cut, Versa Pro Z | **99-126** | | 16-1/2 | 5/8 | | | 2.50/.203 | 0 | 1-1/16 | |
| Gator® G3™ | **96-308** | | 16-1/2 | 5/8 | | | 2.50/.203 | 0 | 1 | G3 |
| Gator G5™ | **596-308** | | 16-1/2 | 5/8 | | | 3.00/.203 | 0 | 1 | G5 High-Lift Xtended Fusion® |
| Gator G6® | **396-735** | | 16-1/2 | 5/8 | | | 3.00/.250 | 0 | 1 | G6 Heavy-Duty High-Lift Xtended Fusion® |

B

## DR

| | OREGON | OEM No. | Length | Center | Outer | C to C | W / T | Off | Lift | Prod. Code |
|---|---|---|---|---|---|---|---|---|---|---|
| (3) for 52" cut, Versa Pro Z | **91-622** | 225381 | **18** | 5/8 | | | 2.50/.203 | 0 | 1 | |
| | | | | | | | Xtended | | | |
| (3) for 52" cut, Versa Pro Z, high-lift | **91-623** | | 18 | 5/8 | | | 3.00/.203 | 0 | 1-1/2 | |
| | | | | | | | Xtended | | | |
| (3) for 52" cut, Versa Pro Z, low-lift | **91-235** | | 18 | 5/8 | | | 2.50/.250 | 0 | 7/8 | |
| | | | | | | | Xtended | | | |
| (3) for 52" cut, Versa Pro Z, mulching | **91-218** | | 18 | 5/8 | | | 2.50/.164 | 0 | 1 | |
| | | | | | | | Xtended | | | |
| (3) for 52" cut, Versa Pro Z, mulching | **91-335** | | 18 | 5/8 | | | 2.50/.203 | 0 | 1 | |
| | | | | | | | Xtended | | | |
| (3) for 52" cut, Versa Pro Z | **91-181** | | 18 | 5/8 | | | 2.50/.187 | 0 | 1 | |
| | | | | | | | Xtended | | | |
| (3) for 52" cut, Versa Pro Z | **91-184** | | 18 | 5/8 | | | 2.50/.250 | 0 | 1 | |
| | | | | | | | Xtended | | | |
| (3) for 52" cut, Versa Pro Z | **91-256** | | 18 | 5/8 | | | 2.50/.203 | 0 | 1 | |
| | | | | | | | Xtended | | | |
| (3) for 52" cut, Versa Pro Z | **91-312** | | 18 | 5/8 | | | 2.50/.203 | 0 | 1 | |
| | | | | | | | Xtended | | | |
| (3) for 52" cut, Versa Pro Z | **94-053** | | 18 | 5/8 | | | 2.50/.250 | 0 | 1 | |
| (3) for 52" cut, Versa Pro Z | **91-637** | | 18 | 5/8 | | | 2.50/.203 | 0 | 1 | |
| Gator® G3™ | **96-344** | | 18 | 5/8 | | | 2.50/.203 | 0 | 3/4 | G3 |
| Gator G5™ | **596-344** | | 18 | 5/8 | | | 3.00/.203 | 0 | 1 | |
| | | | | | | | High-Lift Xtended Fusion® | | | G5 |
| Gator G6® | **396-726** | | 18 | 5/8 | | | 3.00/.250 | 0 | 1 | |
| | | | | | | | Heavy-Duty High-Lift Xtended Fusion® | | | G6 |

B

# Blades - OEM Replacements

## DR

| | OREGON | OEM No. | Length | Center | Outer | C to C | W / T | Off | Lift | Prod. Code |
|---|---|---|---|---|---|---|---|---|---|---|
| (2) for 42" cut | **195-032** | | **21** | 5 pt. Star | | | 2.25/.149 | 1/8 | 1-1/16 | Xtended 100 |
| (2) for 42" cut, heavy-duty version of 195-032 | **195-039** | | 21 | 5 pt. Star | 5/16 | 3-1/8 | 2.25/.187 | 1/8 | 1-1/18 | Xtended 100 |
| (2) for 42" cut | **195-048** | | 21 | 5 pt. Star | 5/16 | 3-1/8 | 2.25/.187 | 0 | 3/4 | Xtended 100 |
| (2) for 42" cut | **95-086** | | 21 | 5 pt. Star | | | 2.50/.203 | 0 | 1.000 | |
| Gator® G3™ | **96-900** | 151691 | 21 | 5 pt. Star | | | 2.50/.187 | 0 | 3/4 | G3 |
| Gator G5™ | **596-900** | | 21 | 5 pt. Star | | | 3.00/.164 | 0 | 1 | High-Lift Xtended Fusion® G5 |
| (3) for 48" cut, Versa Pro Z, low-lift | **91-207** | | **24-1/2** | 7/8 | | | 3.00/.250 | 0 | 1 | |

## Dynamow

| | | | | | | | | | | |
|---|---|---|---|---|---|---|---|---|---|---|
| Gator G3 (3) for 72" cut | **96-724** | | **24-3/4** | 1/2 | | | 2.50/.250 | 1/2 | 1 | G3 |

B


Can't find what you're looking for?
Try us online to search the latest products available.

OregonProducts.com

## Encore

| | OREGON | OEM No. | Length | Center | Outer | C to C | W / T | Off | Lift | Prod. Code |
|---|---|---|---|---|---|---|---|---|---|---|
| (3) for 42" cut | **91-265** | 423029 | **14-1/4** | 5/8 | | | 2.50/.203 Xtended | 0 | 1 | |
| Gator® G3™ | **96-324** | 423014<br>423173<br>423210 | 14-1/4 | 5/8 | | | 2.50/.203 Xtended | 0 | 1 | G3 |
| (3) for 48" cut, Xtreme | **91-266** | 483035 | **16-3/8** | 5/8 | | | 2.50/.203 Xtended | 0 | 1 | |
| Gator G3 | **96-328** | 483049<br>483050 | 16-3/8 | 5/8 | | | 2.50/.203 | 0 | 1 | G3 |
| (3) for 52" cut | **91-622** | 363291<br>481707<br>482462 | **18** | 5/8 | | | 2.50/.203 Xtended | 0 | 1 | |
| (3) for 52" cut, high-lift | **91-623** | | 18 | 5/8 | | | 3.00/.203 Xtended | 0 | 1-1/2 | |
| (3) for 52" cut, low-lift | **91-235** | | 18 | 5/8 | | | 2.50/.250 Xtended | 0 | 7/8 | |
| (3) for 52" cut, mulching | **91-218** | | 18 | 5/8 | | | 2.50/.164 Xtended | 0 | 1 | |
| (3) for 52" cut | **91-181** | | 18 | 5/8 | | | 2.50/.187 Xtended | 0 | 1 | |
| (3) for 52" cut | **91-184** | | 18 | 5/8 | | | 2.50/.250 Xtended | 0 | 1 | |
| (3) for 52" cut | **91-256** | | 18 | 5/8 | | | 2.50/.203 Xtended | 0 | 1 | |
| (3) for 52" cut | **91-312** | | 18 | 5/8 | | | 2.50/.203 Xtended | 0 | 1 | |
| (3) for 52" cut | **91-335** | | 18 | 5/8 | | | 2.50/.203 Xtended | 0 | 1 | |
| (3) for 52" cut | **94-053** | | 18 | 5/8 | | | 2.50/.250 | 0 | 1 | |

GROUP CONTINUES

B

# Blades - OEM Replacements

## Encore

| | OREGON | OEM No. | Length | Center | Outer | C to C | W / T | Off | Lift | Prod. Code |
|---|---|---|---|---|---|---|---|---|---|---|
| | | | GROUP CONTINUES | | | | | | | |
| Gator® G3™ | **96-344** | | 18 | 5/8 | | | 2.50/.203 | 0 | 3/4 | G3 |
| Gator G5™ | **596-344** | | 18 | 5/8 | | | 3.00/.203 | 0 | 1 | G5 (High-Lift Xtended Fusion®) |
| Gator G6™ | **396-726** | | 18 | 5/8 | | | 3.00/.250 | 0 | 1 | G6 (Heavy-Duty High-Lift Xtended Fusion®) |
| (3) for 52" cut | **92-030** | 543293 | **18** | 15/16 | | | 2.50/.203 | 0 | 1 | (Xtended) |
| (3) for 52" cut, mulching | **92-027** | | 18 | 15/16 | | | 2.50/.203 | 0 | 1 | |
| Gator G3 | **96-322** | | 18 | 15/16 | | | 2.50/.203 | 0 | 1 | G3 (Xtended) |
| Gator G5 | **596-322** | | 18 | 15/16 | | | 3.00/.203 | 0 | 1 | G5 (High-Lift Xtended Fusion®) |
| Gator G6 | **396-322** | | 18 | 15/16 | | | 3.00/.250 | 0 | 1 | G6 (Heavy-Duty High-Lift Xtended Fusion®) |
| (3) for 52" cut | **91-039** | 823004 | **18** | 5/8 | | | 2.50/.203 | 1/2 | 1 | |
| (3) for 52" cut, high-lift | **93-010** | | 18 | 5/8 | | | 2.50/.203 | 1/2 | 1-1/8 | (Xtended) |
| Gator G3 | **93-601** | | 18 | 5/8 | | | 2.50/.203 | 1/2 | 3/4 | G3 |
| Gator G5 | **593-601** | | 18 | 5/8 | | | 3.00/.203 | 1/2 | 1 | G5 (High-Lift Xtended Fusion®) |
| (3) for 60" cut, all models | **91-259** | 603035<br>604035 | **20-1/4** | 5/8 | | | 2.50/.203 | 0 | 1 | (Xtended) |
| Gator G5 | **591-259** | 603055<br>603056 | 20-1/4 | 5/8 | | | 3.00/.164 | 0 | 1 | G5 (High-Lift Xtended Fusion®) |

## Encore

| | OREGON | OEM No. | Length | Center | Outer | C to C | W / T | Off | Lift | Prod. Code |
|---|---|---|---|---|---|---|---|---|---|---|
| (3) for 60" cut | **92-031** | 543294 | **20-1/2** | 15/16 | | | 2.50/.203 | 0 | 1 | |
| | | | | | | | Xtended | | | |
| (3) for 60" cut, high-lift | **92-209** | | 20-1/2 | 15/16 | | | 3.00/.203 | 0 | 1-5/16 | |
| (3) for 60" cut, mulching | **92-028** | | 20-1/2 | 15/16 | | | 3.00/.203 | 0 | 1-5/16 | |
| | | | | | | | Xtended | | | |
| (3) for 60" cut | **92-082** | | 20-1/2 | 15/16 | | | 2.50/.203 | 0 | 1 | |
| | | | | | | | Xtended | | | |
| (3) for 60" cut | **92-025** | | 20-1/2 | 15/16 | | | 2.50/.203 | 0 | 1 | |
| | | | | | | | Xtended | | | |
| Gator® G3™ | **96-749** | | 20-1/2 | 15/16 | | | 2.50/.203 | 0 | 1 | |
| | | | | | | | Xtended | | | G3 |
| Gator G5™ | **596-749** | | 20-1/2 | 15/16 | | | 3.00/.203 | 0 | 1 | |
| | | | | | | | High-Lift Xtended Fusion® | | | G5 |
| Gator G6™ | **392-025** | | 20-1/2 | 15/16 | | | 3.00/.250 | 0 | 1 | |
| | | | | | | | Heavy-Duty High-Lift Xtended Fusion® | | | G6 |
| (3) for 61" cut, high-lift, Prowler | **91-135** | 823006 | **21** | 5/8 | | | 2.50/.203 | 1/2 | 1 | |
| (3) for 61" cut, Prowler | **93-011** | | 21 | 5/8 | | | 2.50/.250 | 1/2 | 1-1/8 | |
| | | | | | | | Xtended | | | |
| (3) for 61" cut, low-lift, Prowler | **93-013** | | 21 | 5/8 | | | 2.50/.250 | 1/2 | 5/8 | |
| | | | | | | | Xtended | | | |
| Gator G3 | **96-702** | | 21 | 5/8 | | | 2.50/.203 | 1/2 | 1 | |
| | | | | | | | | | | G3 |
| Gator G5 | **596-702** | | 21 | 5/8 | | | 3.00/.203 | 1/2 | 1 | |
| | | | | | | | High-Lift Xtended Fusion® | | | G5 |
| Gator G6 | **396-702** | | 21 | 5/8 | | | 3.00/.250 | 1/2 | 1 | |
| | | | | | | | Heavy-Duty High-Lift Xtended Fusion® | | | G6 |

B

# Blades - OEM Replacements

## Encore

| | OREGON | OEM No. | Length | Center | Outer | C to C | W / T | Off | Lift | Prod. Code |
|---|---|---|---|---|---|---|---|---|---|---|
| (3) for 72" cut | **93-025** | 583287 | **24-15/16** | 5/8 | | | 2.50/.250 | 1/2 | 1-1/4 | |

## Everide

| | OREGON | OEM No. | Length | Center | Outer | C to C | W / T | Off | Lift | Prod. Code |
|---|---|---|---|---|---|---|---|---|---|---|
| (3) for 48" cut | **92-054** | 191107 | **16-1/2** | 9/16 | | | 2.50/.203 | 0 | 1 | Xtended |
| Gator G3, (3) for 54" cut | **92-607** | 181042 | **19** | 9/16 | | | 2.50/.203 | 0 | 3/4 | G3 |
| (3) for 60" cut | **91-482** | 181026 | **21** | 9/16 | | | 2.50/.203 | 0 | 1 | Xtended |
| Gator G5™ | **592-608** | | 21 | 9/16 | | | 3.00/.203 | 0 | 1 | High-Lift Xtended Fusion® G5 |

## Exmark

| | OREGON | OEM No. | Length | Center | Outer | C to C | W / T | Off | Lift | Prod. Code |
|---|---|---|---|---|---|---|---|---|---|---|
| (3) for 44" cut, Laser HP | **91-369** | 103-2529<br>103-2529-S<br>1-653101 | **15-1/4** | 5/8 | | | 2.50/.203 | 0 | 1 | Xtended |
| (3) for 44" cut, mulching | **91-373** | 103-2519<br>103-2519-S<br>103-6390<br>103-6390-S<br>1-653102 | 15-1/4 | 5/8 | | | 2.50/.203 | 0 | 1 | Xtended |
| Gator G3 | **96-327** | 103-1579<br>103-1579-S<br>103-2509<br>103-2509-S<br>103-6335<br>103-6335-S<br>116-5171<br>116-5171-S<br>1-653178<br>1-653179 | 15-1/4 | 5/8 | | | 2.50/.203 | 0 | 1 | Xtended G3 |
| Gator G5 | **596-327** | | 15-1/4 | 5/8 | | | 3.00/.203 | 0 | 1 | High-Lift Xtended Fusion® G5 |
| Gator® G5™, (2) for 30" cut, ECKA30 walk-behind | **594-601** | 116-6358<br>116-6358-03<br>116-6358-S | **15-3/8** | 5/8 | 5/16 | 1-1/4 | 3.00/.134 | 5/16 | 1 | High-Lift Xtended Fusion® G5 |

B

## Exmark

| | OREGON | OEM No. | Length | Center | Outer | C to C | W / T | Off | Lift | Prod. Code |
|---|---|---|---|---|---|---|---|---|---|---|
| (3) for 48" cut, (2) for 32" cut Turf Tracer, HP Metro and Viking | **91-313** | 103-2527<br>103-6583<br>103-6583-S<br>1-323515<br>1-403026<br>1-403059<br>323515<br>E323515 | **16-1/4** | 5/8 | | | 2.50/.203 | 0 | 1 | |
| (3) for 48" cut, (2) for 32" cut | **91-180** | | 16-1/4 | 5/8 | | | 2.50/.187 | 0 | 1 | |
| (3) for 48" cut, (2) for 32" cut, heavy-duty | **91-183** | | 16-1/4 | 5/8 | | | 2.50/.250 | 0 | 1 | |
| (3) for 48" cut, (2) for 32" cut | **99-127** | 103-1577<br>103-1577-S<br>1-413438 | 16-1/4 | 5/8 | | | 2.50/.203 | 0 | 1-1/16 | |
| (3) for 48" cut, (2) for 32" cut, mulching | **91-368** | 103-2517<br>103-6581<br>103-6581-S<br>1-403086<br>1-403148 | 16-1/4<br><br><br>403086<br>403148 | 5/8 | | | 2.50/.203<br>Xtended | 0 | 1 | |
| Gator G3™ | **96-310** | 103-2507<br>103-6336<br>103-6336-S<br>103-6401<br>103-6401-S<br>103-6738<br>103-6738-S<br>109-6389<br>109-6389-S<br>109-6391 | 16-1/4<br><br><br>109-6391-S<br>116-5178<br>116-5178-S<br>1-403075<br>1-403149<br>403149<br>E403149 | 5/8 | | | 2.50/.203 | 0 | 3/4 | G3 |
| Gator G5 | **596-310** | | 16-1/4 | 5/8 | | | 3.00/.203<br>High-Lift Xtended Fusion® | 0 | 1 | G5 |
| Gator G6™ | **396-716** | | 16-1/4 | 5/8 | | | 3.00/.250<br>Heavy-Duty High-Lift Xtended Fusion® | 0 | 1 | G6 |
| (2) blades for 32" deck, 3 blades for 48" deck, low lift | **92-919**<br>NEW | 103-6386-S | **16-1/4** | 15/16 | | | 3.00/.203 | 0 | 5/8 | |
| (3) for 48" cut | **92-029** | 103-6401<br>103-6401-S | 16-1/4 | 15/16 | | | 2.50/.203<br>Xtended | 0 | 1 | |
| (3) for 48" cut, mulching | **92-026** | 103-6391<br>103-6391-S | 16-1/4 | 15/16 | | | 2.50/.203<br>Xtended | 0 | 1 | |

GROUP CONTINUES

# Blades - OEM Replacements

## Exmark

GROUP CONTINUES

| | OREGON | OEM No. | Length | Center | Outer | C to C | W / T | Off | Lift | Prod. Code |
|---|---|---|---|---|---|---|---|---|---|---|
| Gator® G3™ | **96-321** | 103-6381<br>103-6381-S<br>103-6396<br>103-6396-S<br>116-5177<br>116-5177-S | 16-1/4 | 15/16 | | | 2.50/.203 | 0 | 1 | G3 |
| Gator G5™ | **596-321** | | 16-1/4 | 15/16 | | | 3.00/.203 | 0 | 1 | High-Lift Xtended Fusion® G5 |
| Gator G6™ | **396-321** | | 16-1/4 | 15/16 | | | 3.00/.250 | 0 | 1 | Heavy-Duty High-Lift Xtended Fusion® G6 |
| (3) for 46" cut, Triton | **492-726** | 103-8370<br>103-8370-S | **16-1/4** | 15/16 | | | 3.00/.203 | 3/8 | 1-1/16 | Fusion® |
| Gator G6 | **392-205** | 103-8250<br>103-8250-S<br>103-8251<br>103-8251-S<br>103-8288<br>103-8288-S<br>103-8296<br>103-8296-S<br>103-8420 | 16-1/4<br><br><br>103-8420-S<br>103-8433<br>103-8433-S<br>103-9614-S<br>109-6460<br>109-6460-S | 15/16 | <br><br><br>109-6466<br>109-6466-S<br>109-9390<br>109-9390-S<br>116-5496-S | | 3.00/.250 | 3/8 | 1 | Heavy-Duty High-Lift Xtended Fusion® G6 |
| (3) blades for 50" deck, high-lift | **92-912** NEW | 103-6461 | **17-1/2** | 15/16 | | | 3.00/.203 | 3/8 | 1 | |
| (3) for 50" cut, high-lift, Quest | **94-128** | 115-5059-03 | **17-1/2** | 5/8 | | | 2.25/.164 | 5/16 | 1-1/4 | |
| Gator G5 | **594-078** | | 17-1/2 | 5/8 | | | 3.00/.164 | 3/8 | 1 | High-Lift Xtended Fusion® G5 |
| (3) for 50" cut, high-lift, Triton | **492-731** | 103-9601<br>103-9601-S<br>103-9605<br>103-9605-S<br>109-6461-S | **17-1/2** | 15/16 | | | 3.00/.203 | 3/8 | 1-1/16 | Fusion® |
| Gator® G6™ | **392-206** | 103-9599<br>103-9599-S<br>103-9600-S<br>103-9610-S<br>103-9615-S<br>109-5876<br>109-5876-S | 17-1/2<br><br><br>109-6467<br>109-6467-S<br>109-9391-S<br>116-5497-S | 15/16 | | | 3.00/.250 | 3/8 | 1 | Heavy-Duty High-Lift Xtended Fusion® G6 |

B

## Exmark

| | OREGON | OEM No. | Length | Center | Outer | C to C | W / T | Off | Lift | Prod. Code |
|---|---|---|---|---|---|---|---|---|---|---|
| (3) for 52" cut, Turf Tracer | **91-170** | 103-3229<br>1-603637 | **18** | 1/2 | | | 2.50/.203<br>Xtended | 0 | 1 | |
| (2) for 36" cut, (3) for 52" cut, Laser Z, Metro, Turf Ranger, Turf Tracer, Viking | **91-181** | 103-2508<br>103-2508-S<br>1-633485<br>633485<br>E633485 | **18** | 5/8 | | | 2.50/.187<br>Xtended | 0 | 1 | |
| (2) for 36" cut, (3) for 52" cut | **93-006** | | 18 | 5/8 | 1/4 | 1-5/8 | 2.50/.250<br>Xtended | 0 | 1-3/16 | |
| (2) for 36" cut, (3) for 52" cut, heavy-duty | **91-184** | 303283 | 18 | 5/8 | | | 2.50/.250<br>Xtended | 0 | 1 | |
| (2) for 36" cut, (3) for 52" cut, Turf Tracer, Turf Ranger & Lazer Z | **91-312** | 103-2528<br>103-6584<br>103-6584-B<br>103-6584-M<br>103-6584-S<br>1-303146 | 18<br><br>1-303283<br>1-633482<br>633482<br>E633482 | 5/8 | | | 2.50/.203<br>Xtended | 0 | 1 | |
| (2) for 36" cut, (3) for 52" cut | **91-256** | 103-1578<br>103-1578-S<br>1-303527<br>303527 | 18 | 5/8 | | | 2.50/.203<br>Xtended | 0 | 1 | |
| (2) for 36" cut, (3) for 52" cut, mulching | **91-218** | | 18 | 5/8 | | | 2.50/.164<br>Xtended | 0 | 1 | |
| (2) for 36" cut, (3) for 52" cut, mulching | **91-335** | 103-2518<br>103-6582<br>103-6582-B<br>103-6582-M<br>103-6582-S | 18<br><br>1-303495<br>1-633484<br>633484 | 5/8 | | | 2.50/.203<br>Xtended | 0 | 1 | |
| Gator® G3™ | **96-344** | 103-6337-S<br>103-6580<br>103-6580-S<br>116-5176-S | 18 | 5/8 | | | 2.50/.203 | 0 | 3/4 | G3 |
| Gator G5™ | **596-344** | | 18 | 5/8 | | | 3.00/.203<br>High-Lift Xtended Fusion® | 0 | 1 | G5 |
| Gator G6™ | **396-726** | | 18 | 5/8 | | | 3.00/.250<br>Heavy-Duty High-Lift Xtended Fusion® | 0 | 1 | G6 |

B

# Blades - OEM Replacements

## Exmark

| | OREGON | OEM No. | Length | Center | Outer | C to C | W / T | Off | Lift | Prod. Code |
|---|---|---|---|---|---|---|---|---|---|---|
| (3) for 52" cut | **92-030** | 103-6402<br>103-6402-S<br>109-6873 | **18** | 15/16 | | | 2.50/.203 | 0 | 1 | Xtended |
| (3) for 52" cut, mulching | **92-027** | 103-6392<br>103-6392-S | 18 | 15/16 | | | 2.50/.203 | 0 | 1 | |
| Gator G3 | **96-322** | 103-6382<br>103-6382-S<br>103-6387<br>103-6387-S<br>103-6397<br>103-6397-S<br>116-5175<br>116-5175-S<br>116-5176<br>116-5176-S | 18 | 15/16 | | | 2.50/.203 | 0 | 1 | Xtended G3 |
| Gator G5 | **596-322** | | 18 | 15/16 | | | 3.00/.203 | 0 | 1 | High-Lift Xtended Fusion® G5 |
| Gator G6 | **396-322** | | 18 | 15/16 | | | 3.00/.250 | 0 | 1 | Heavy-Duty High-Lift Xtended Fusion® G6 |
| (3) for 54" cut, Quest | **94-070** | | **18-3/4** | 5/8 | | | 2.25/.164 | 5/16 | 7/8 | |
| (3) for 54" cut, high-lift, Quest | **94-060** | | 18-3/4 | 5/8 | | | 2.25/.164 | 5/16 | 1-1/8 | G3 |
| Gator G3 | **96-803** | 115-2454-03 | 18-3/4 | 5/8 | | | 2.25/.164 | 5/16 | 3/4 | G3 |
| Gator G6 | **396-803** | | 18-3/4 | 5/8 | | | 3.00/.250 | 5/16 | 1 | Heavy-Duty High-Lift Xtended Fusion® G6 |
| (3) for 56" cut, notched blade, high-lift | **92-913** NEW | 109-6462-S | **19-1/2** | 15/16 | | | 3.00/.203 | 3/8 | 1 | |
| (3) for 60" cut, Explorer | **91-259** | 1-513972<br>513972 | **20-1/4** | 5/8 | | | 2.50/.203 | 0 | 1 | Xtended |
| Gator G5™ | **591-259** | | 20-1/4 | 5/8 | | | 3.00/.164 | 0 | 1 | High-Lift Xtended Fusion® G5 |

B

## Exmark

| | OREGON | OEM No. | Length | Center | Outer | C to C | W / T | Off | Lift | Prod. Code |
|---|---|---|---|---|---|---|---|---|---|---|
| Gator G3 (1) for 21" cut, walk-behind | **96-810** | 116-4500<br>116-4500-03<br>116-4500-S | **20-1/2** | 7/16 | 3/8 | 2.5 | 2.25/.134 | 7/16 | 3/4 | G3 |
| (3) for 60" cut, Turf Tracer models | **91-188** | 103-3233<br>103-3233-S<br>1-603283<br>603283 | **20-1/2** | 1/2 | | | 2.50/.203 | 0 | 1 | |
| | | | | | | | Xtended | | | |
| (3) for 60" cut, Turf Tracer models | **94-072** | 103-3231<br>1-603874<br>603874 | 20-1/2 | 1/2 | | | 2.50/.250 | 0 | 3/4 | |
| (3) for 60" cut, mulcher | **91-217** | 103-3231<br>1-603874<br>603874 | 20-1/2 | 1/2 | | | 2.50/.203 | 0 | 1 | |
| Gator G6™ | **396-739** | | 20-1/2 | 1/2 | | | 3.00/.250 | 0 | 1 | |
| | | | | | | | Heavy-Duty High-Lift Xtended Fusion® | | | G6 |
| (3) for 60" cut, Lazer Z | **91-264** | 103-2530<br>103-2530-B<br>103-2530-M<br>103-2530-S<br>1-633483<br>633483 | **20-1/2** | 5/8 | | | 2.50/.203 | 0 | 1 | |
| | | | | | | | Xtended | | | |
| (3) for 60" cut, low-lift, Lazer Z | **91-378** | 103-2510<br>103-2510-S<br>1-613111<br>613111 | 20-1/2 | 5/8 | | | 2.50/.203 | 0 | 5/8 | |
| (3) for 60" cut, heavy-duty, Lazer Z | **91-506** | | 20-1/2 | 5/8 | | | 2.50/.250 | 0 | 1-3/16 | |
| | | | | | | | Xtended | | | |
| (3) for 60" cut, mulching, Lazer Z | **91-311** | 103-0301<br>103-0301-B<br>103-0301-M<br>103-0301-S<br>1-613112 | 20-1/2 | 5/8 | | | 2.50/.203 | 0 | 1 | |
| | | | | | | | Xtended | | | |
| Gator® G3™ | **96-319** | 103-1580<br>103-1580-B<br>103-1580-M<br>103-1580-S | 20-1/2 | 5/8 | | | 2.50/.203 | 0 | 3/4 | G3 |
| Gator G5™ | **596-319** | | 20-1/2 | 5/8 | | | 3.00/.203 | 0 | 1 | |
| | | | | | | | High-Lift Xtended Fusion® | | | G5 |
| Gator G6™ | **396-740** | | 20-1/2 | 5/8 | | | 3.00/.250 | 0 | 1 | |
| | | | | | | | Heavy-Duty High-Lift Xtended Fusion® | | | G6 |

B

# Blades - OEM Replacements

## Exmark

| | OREGON | OEM No. | Length | Center | Outer | C to C | W / T | Off | Lift | Prod. Code |
|---|---|---|---|---|---|---|---|---|---|---|
| (3) for 60" cut, Bahia Mowers | **92-025** | 103-6383<br>103-6383-S | **20-1/2** | 15/16 | | | 2.50/.203 | 0 | 1<br>Xtended | |
| (3) for 60" cut | **92-031** | 103-6403<br>103-6403-S | 20-1/2 | 15/16 | | | 2.50/.203 | 0 | 1<br>Xtended | |
| (3) for 60" cut, high-lift | **92-209** | | 20-1/2 | 15/16 | | | 3.00/.203 | 0 | 1-5/16 | |
| (3) for 60" cut, low-lift | **92-082** | 103-6388<br>103-6388-S | 20-1/2 | 15/16 | | | 2.50/.203 | 0 | 1<br>Xtended | |
| (3) for 60" cut, mulching, Lazer Z | **92-028** | 103-6393<br>103-6393-S | 20-1/2 | 15/16 | | | 3.00/.203 | 0 | 1-5/16<br>Xtended | |
| Gator G3 | **96-749** | 103-6398<br>103-6398-S<br>116-5174<br>116-5174-S | 20-1/2 | 15/16 | | | 2.50/.203 | 0 | 1<br>Xtended | G3 |
| Gator® G5™ | **596-749** | | 20-1/2 | 15/16 | | | 3.00/.203 | 0 | 1<br>High-Lift Xtended Fusion® | G5 |
| Gator G6™ | **392-025** | | 20-1/2 | 15/16 | | | 3.00/.250 | 0 | 1<br>Heavy-Duty High-Lift Xtended Fusion® | G6 |
| (3) for 60" cut, Triton | **492-730** | 103-8244<br>103-8244-S<br>103-8432<br>103-8432-S<br>109-6463<br>109-6463-S | **20-11/16** | 15/16 | | | 3.00/.203 | 3/8 | 1-1/16<br>Fusion® | |
| Gator G6 | **392-201** | 103-8107<br>103-8107-S<br>103-8239<br>103-8239-S<br>103-8240<br>103-8240-S<br>103-8396<br>103-8396-S | 20-11/16 | 15/16 | 103-8431<br>103-8431-S<br>103-9629-S<br>109-5396<br>109-5396-S | 109-6466<br>109-6466-S<br>109-9393-S<br>116-5494 | 3.00/.250 | 3/8 | 1<br>Heavy-Duty High-Lift Xtended Fusion® | G6 |

## Exmark

| | OREGON | OEM No. | Length | Center | Outer | C to C | W / T | Off | Lift | Prod. Code |
|---|---|---|---|---|---|---|---|---|---|---|
| (1) for 21" cut, walk-behind mower | **94-051** | 108-3762-03<br>108-3762-03P<br>108-3762-S | **20-7/8** | 7/16 | 3/8 | 2-1/2 | 2.25/.149 | 7/16 | 7/8 | |
| Gator G3 | **96-660** | 108-0954<br>108-0954-03<br>108-0954-S | 20-7/8 | 7/16 | 3/8 | 2-1/2 | 2.25/.134 | 7/16 | 1 | G3 |
| (1) for 21" cut, metro, walk-behind mower | **94-017** | 107-4276<br>107-4276-S<br>42-1000<br>42-1000-S | **21** | 7/16 | 3/8 | 2-7/16 | 2.25/.134 | 5/16 | 7/8 | |
| Gator G6 (2) for 42" cut | **394-129** | 131-3939-03 | **21-9/16** | 5/8 | | | 3.00/.250 | 5/16 | 1 | Heavy-Duty High-Lift Xtended Fusion® G6 |
| (2) for 42" cut, Quest | **94-069** | 110-6568-03<br>117-5372-03 | 21-9/16 | 5/8 | | | 2.25/.164 | 5/8 | 1-1/4 | |
| (2) for 42" cut, mulcher | **94-068** | | 21-9/16 | 5/8 | | | 2.25/.164 | 9/16 | 13/16 | |
| Gator® G3™ | **96-362** | | 21-9/16 | 5/8 | | | 2.25/.187 | 5/8 | 3/4 | G3 |
| Gator G5™ | **596-362** | | 21-9/16 | 5/8 | | | 3.00/.187 | 5/8 | 1 | High-Lift Xtended Fusion® G5 |
| (2) for 42" deck, Navigator rear bagger, RHC | **92-921** NEW | 103-4210 | 22 | 7/8 | 1/4 | 3 | 2.75/.164 | 11/16 | 13/16 | |

B

Can't find what you're looking for?
Try us online to search the latest products available.

OregonProducts.com

# Blades - OEM Replacements

## Exmark

| | OREGON | OEM No. | Length | Center | Outer | C to C | W / T | Off | Lift | Prod. Code |
|---|---|---|---|---|---|---|---|---|---|---|
| (3) for 66" cut, high-lift, Triton | **492-732** | 103-9618<br>103-9618-S<br>103-9620<br>103-9620-S<br>103-9818-S<br>109-6464<br>109-6464-S | **22-11/16** | 15/16 | | | 3.00/.203<br>Fusion® | 3/8 | 1-1/16 | |
| Gator G6™ | **392-203** | 103-9612-S<br>103-9616<br>103-9616-S<br>103-9619<br>103-9619-S<br>103-9621<br>103-9621-S<br>103-9630<br>103-9630-S | 22-11/16<br><br><br>109-5878<br>109-5878-S<br>109-6466<br>109-6466-S<br>109-9394-S<br>116-5500-S | 15/16 | | | 3.00/.250<br>Heavy-Duty High-Lift Xtended Fusion® | 3/8 | 1 | G6 |
| (3) for 72" cut, Lazer Z | **91-374** | 103-2531<br>103-2531-B<br>103-2531-M<br>103-2531-S<br>1-643006<br>643006 | **24-3/8** | 5/8 | | | 3.00/.203<br>Xtended | 0 | 1-1/4 | |
| Gator G3 | **96-699** | 103-6339<br>103-6339-S<br>109-9395-S<br>116-5172<br>116-5172-S | 24-3/8 | 5/8 | | | 3.00/.203 | 0 | 3/4 | G3 |
| (3) for 72" cut, Lazer Z, Turf Ranger | **92-057** | 103-6384<br>103-6384-S | 24-1/2 | 15/16 | | | 3.00/.203<br>Xtended | 0 | 1 | |
| (3) for 72" cut, high-lift, Lazer Z, Turf Ranger for 92-033 | **92-033** | 103-6404<br>103-6404-S | 24-1/2 | 15/16 | | | 3.00/.203<br>Xtended | 0 | 1-1/4 | |
| (3) for 72" cut, mulching, Lazer Z, Turf Ranger | **92-084** | 103-6394<br>103-6394-S | 24-1/2 | 15/16 | | | 3.00/.203<br>Xtended | 0 | 1-3/16 | |

GROUP CONTINUES

## Exmark

| | OREGON | OEM No. | Length | Center | Outer | C to C | W / T | Off | Lift | Prod. Code |
|---|---|---|---|---|---|---|---|---|---|---|
| Gator® G5™ | **592-033** | 103-6399<br>103-6399-S<br>116-5171<br>116-5171-S | 24-1/2 | 15/16 | | | 3.00/.203 | 0 | 1 | High-Lift Xtended Fusion® G5 |
| Gator G6™ | **392-057** | | 24-1/2 | 15/16 | | | 3.00/.250 | 0 | 1 | Heavy-Duty High-Lift Xtended Fusion® G6 |
| (3) blades for 72" deck, high-lift | **92-910** NEW | 109-6465-S | **24-11/16** | 15/16 | | | 3.00/.203 | 3/8 | 1 | |
| Gator G6 | **392-204** | 103-9395-S<br>103-9613-S<br>103-9622<br>103-9622-S<br>103-9624<br>103-9624-S<br>103-9625<br>103-9625-S<br>103-9626 | 24-11/16 | 15/16 | | | 3.00/.250 | 3/8 | 1 | Heavy-Duty High-Lift Xtended Fusion® G6 |
| | | 103-9626-S<br>103-9631<br>103-9631-S<br>109-5879<br>109-5879-S<br>109-6465 | | | | | | | | |
| | | 109-6465-S<br>109-6471<br>109-6471-S<br>116-5501<br>116-5501-S | | | | | | | | |
| (1) 92-167 & (1) 92-168 for 48" cut, left-hand cut, Navigator | **92-167** | 103-4208 | **25** | 7/8 | 1/4 | 3 | 2.75/.164 | 1-1/16 | 13/16 | |
| (1) 92-167 & (1) 92-168 for 48" cut, Navigator | **92-168** | 103-4207<br>130-2861 | **25** | 7/8 | 1/4 | 3 | 2.75/.164 | 1-1/16 | 13/16 | |

## Ferris

| | | | | | | | | | | |
|---|---|---|---|---|---|---|---|---|---|---|
| (3) for 44" cut | **91-608** | 5061827S | **15** | 5/8 | | | 2.50/.250 | 0 | 1 | |
| Gator® G6™ - (will not fit ICD decks) | **391-608** | | 15 | 5/8 | | | 3.00/.250 | 0 | 1 | Heavy-Duty High-Lift Xtended Fusion® G6 |
| (3) for 48" cut | **91-183** | 20843<br>20843S<br>5020843<br>5020843S<br>5020843X2 | **16-1/4** | 5/8 | | | 2.50/.250 | 0 | 1 | |
| (3) for 48" cut | **91-180** | | 16-1/4 | 5/8 | | | 2.50/.187 | 0 | 1 | |
| (3) for 48" cut | **91-313** | 5101986<br>5101986S | 16-1/4 | 5/8 | | | 2.50/.203 | 0 | 1 | |

GROUP CONTINUES

# Blades - OEM Replacements

## Ferris

| | OREGON | OEM No. | Length | Center | Outer | C to C | W / T | Off | Lift | Prod. Code |
|---|---|---|---|---|---|---|---|---|---|---|
| | | | GROUP CONTINUES | | | | | | | |
| (3) for 48" cut | **99-127** | | 16-1/4 | 5/8 | | | 2.50/.203 | 0 | 1-1/16 | |
| (3) for 48" cut, mulching | **91-368** | 5103303S<br>5103303X2 | 16-1/4 | 5/8 | | | 2.50/.203 | 0 | 1 | Xtended |
| Gator G3™ | **96-310** | | 16-1/4 | 5/8 | | | 2.50/.203 | 0 | 3/4 | G3 |
| Gator G5™ (will not fit ICD decks) | **596-310** | | 16-1/4 | 5/8 | | | 3.00/.203 | 0 | 1 | High-Lift Xtended Fusion® G5 |
| Gator G6 (will not fit ICD decks) | **396-716** | | 16-1/4 | 5/8 | | | 3.00/.250 | 0 | 1 | Heavy-Duty High-Lift Xtended Fusion® G6 |
| (2) for 36" cut, (3) for 52" cut, low-lift | **91-235** | 21227S<br>5021227<br>5021227S<br>5021227X2 | **18** | 5/8 | | | 2.50/.250 | 0 | 7/8 | Xtended |
| (3) for 52" cut, (2) for 36" cut, high-lift (will not fit ICD decks) | **91-623** | 481711<br>A48185 | 18 | 5/8 | | | 3.00/.203 | 0 | 1-1/2 | Xtended |
| (2) for 36" cut, (3) for 52" cut, mulching | **91-218** | | 18 | 5/8 | | | 2.50/.164 | 0 | 1 | Xtended |
| (2) for 36" cut, (3) for 52" cut, mulching | **91-335** | 5103304S<br>5103304X2 | 18 | 5/8 | | | 2.50/.203 | 0 | 1 | Xtended |
| (2) for 36" cut, (3) for 52" cut | **91-256** | | 18 | 5/8 | | | 2.50/.203 | 0 | 1 | Xtended |
| (2) for 36" cut, (3) for 52" cut | **91-181** | | 18 | 5/8 | | | 2.50/.187 | 0 | 1 | Xtended |
| (2) for 36" cut, (3) for 52" cut | **91-184** | | 18 | 5/8 | | | 2.50/.250 | 0 | 1 | Xtended |
| (2) for 36" cut, (3) for 52" cut | **93-006** | | 18 | 5/8 | 1/4 | 1-5/8 | 2.50/.250 | 0 | 1-3/16 | Xtended |
| | | | GROUP CONTINUES | | | | | | | |

## Ferris

| | OREGON | OEM No. | Length | Center | Outer | C to C | W / T | Off | Lift | Prod. Code |
|---|---|---|---|---|---|---|---|---|---|---|
| | | | GROUP CONTINUES | | | | | | | |
| (2) for 36" cut, (3) for 52" cut | **91-312** | 5101756S<br>5101756X2 | 18 | 5/8 | | | 2.50/.203 | 0 | 1 | |
| | | | | | | | Xtended | | | |
| (2) for 36" cut, (3) for 52" cut | **91-622** | | 18 | 5/8 | | | 2.50/.203 | 0 | 1 | |
| | | | | | | | Xtended | | | |
| (2) for 36" cut, (3) for 52" cut | **91-637** | | 18 | 5/8 | | | 2.50/.203 | 0 | 1 | |
| (2) for 36" cut, (3) for 52" cut | **94-053** | | 18 | 5/8 | | | 2.50/.250 | 0 | 1 | |
| Gator® G3™ | **96-344** | | 18 | 5/8 | | | 2.50/.203 | 0 | 3/4 | G3 |
| Gator G5™ (will not fit ICD decks) | **596-344** | | 18 | 5/8 | | | 3.00/.203 | 0 | 1 | |
| | | | | | | | High-Lift Xtended Fusion® | | | G5 |
| Gator G6™ (will not fit ICD decks) | **396-726** | | 18 | 5/8 | | | 3.00/.250 | 0 | 1 | |
| | | | | | | | Heavy-Duty High-Lift Xtended Fusion® | | | G6 |
| (3) for 61" cut, 1000Z, IS2000Z, IS3100Z, IS4500Z, IS5100Z, PCM4818K, PCM6118K, PCM61200, PCT4818B, PCT6118B, PCW6114K, R61R | **91-209** | 20842<br>20842s<br>5020842<br>5020842s<br>5101755<br>5101755BM<br>5101755S<br>5101755YP | **21** | 5/8 | | | 2.50/.250 | 0 | 1 | |
| | | | | | | | Xtended | | | |
| (3) for 61" cut, 1000Z, IS2000Z, IS3100Z, IS4500Z, IS5100Z, PCM4818K, PCM6118K, PCM61200, PCT4818B, PCT6118B, PCW6114K, R61R | **91-628** | 481712<br>A48304 | 21 | 5/8 | | | 3.00/.203 | 0 | 1-1/2 | |
| | | | | | | | Xtended | | | |
| (3) for 61" cut, 1000Z, IS2000Z, IS3100Z, IS4500Z, IS5100Z, PCM4818K, PCM6118K, PCM61200, PCT4818B, PCT6118B, PCW6114K, R61R | **91-308** | | 21 | 5/8 | | | 2.50/.203 | 0 | 1 | |
| (3) for 61" cut, 1000Z, IS2000Z, IS3100Z, IS4500Z, IS5100Z, PCM4818K, PCM6118K, PCM61200, PCT4818B, PCT6118B, PCW6114K, R61R | **91-626** | | 21 | 5/8 | | | 2.50/.203 | 0 | 1 | |
| | | | GROUP CONTINUES | | | | | | | |

# Blades - OEM Replacements

## Ferris

| | OREGON | OEM No. | Length | Center | Outer | C to C | W / T | Off | Lift | Prod. Code |
|---|---|---|---|---|---|---|---|---|---|---|
| | | | GROUP CONTINUES | | | | | | | |
| | **91-638** | | 21 | 5/8 | | | 2.50/.203 | 0 | 1 | |
| (3) for 61" cut, 1000Z, IS2000Z, IS3100Z, IS4500Z, IS5100Z, PCM4818K, PCM6118K, PCM61200, PCT4818B, PCT6118B, PCW6114K, R61R | | | | | | | | | | |
| | **95-078** | | 21 | 5/8 | | | 2.50/.250 | 0 | 1 | |
| (3) for 61" cut, 1000Z, IS2000Z, IS3100Z, IS4500Z, IS5100Z, PCM4818K, PCM6118K, PCM61200, PCT4818B, PCT6118B, PCW6114K, R61R | | | | | | | | | | |
| | **91-596** | | 21 | 5/8 | | | 2.50/.203 | 0 | 1 | |
| (3) for 61" cut, mulching, 1000Z, IS2000Z, IS3100Z, IS4500Z, IS5100Z, PCM4818K, PCM6118K, PCM61200, PCT4818B, PCT6118B, PCW6114K, R61R | | | | | | | | | | |
| | **96-347** | 5103305S | 21 | 5/8 | | | 2.50/.203 | 0 | 3/4 | G3 |
| Gator® G3™ | | | | | | | | | | |
| | **596-347** | | 21 | 5/8 | | | 3.00/.203 | 0 | 1 | |
| Gator G5™ (will not fit ICD decks) | | | | | | | High-Lift Xtended Fusion® | | | G5 |
| | **396-727** | | 21 | 5/8 | | | 3.00/.250 | 0 | 1 | |
| Gator G6™ (will not fit ICD decks) | | | | | | | Heavy-Duty High-Lift Xtended Fusion® | | | G6 |
| | **91-627** | 48112<br>48113<br>481709 | **24-1/2** | 5/8 | | | 2.50/.203 | 0 | 1 | |
| (3) for 72" cut | | | | | | | Xtended | | | |
| | **92-035** | 48112<br>48113<br>481709 | 24-1/2 | 5/8 | | | 3.00/.250 | 0 | 1-3/16 | |
| (3) for 72" cut | | | | | | | | | | |
| | **96-341** | | 24-1/2 | 5/8 | | | 2.50/.203 | 0 | 3/4 | G3 |
| Gator® G3™ | | | | | | | | | | |
| | **596-341** | | 24-1/2 | 5/8 | | | 3.00/.203 | 0 | 1 | |
| Gator G5™ (will not fit ICD decks) | | | | | | | High-Lift Xtended Fusion® | | | G5 |
| | **396-764** | | 24-1/2 | 5/8 | | | 3.00/.250 | 0 | 1 | |
| Gator G6™ (will not fit ICD decks) | | | | | | | Heavy-Duty High-Lift Xtended Fusion® | | | G6 |
| | **91-609** | 5102227S | **25** | 5/8 | | | 2.50/.250 | 0 | 1 | |
| (3) for 72" cut | | | | | | | | | | |
| | **396-731** | | 25 | 5/8 | | | 3.00/.250 | 0 | 1 | |
| Gator G6 | | | | | | | Heavy-Duty High-Lift Xtended Fusion® | | | G6 |

B

## Ford / New Holland

| | OREGON | OEM No. | Length | Center | Outer | C to C | W / T | Off | Lift | Prod. Code |
|---|---|---|---|---|---|---|---|---|---|---|
| (3) for 42" cut | **91-342** | 330721CJ<br>500904 | **14-7/8** | 7/16 | 1/2 | 1-5/8 | 2.00/.149 | 1/4 | 13/16 | |
| (3) for 48" cut | **91-806** | TR106637 | **16-1/16** | 3/4 | | | 2.00/.203 | 0 | 15/16 | |
| Gator G3 | **90-644** | TR94D9776 | 16-1/16 | 3/4 | | | 2.50/.203 | 0 | 3/4 | G3 |
| (3) for 72" cut, CM274 | **91-207** | 160191<br>84521624 | **24-1/2** | 7/8 | | | 3.00/.250 | 0 | 1 | |
| Gator G3 — (3) for 72" cut | **96-624** | 163442 | **24-7/8** | 7/8 | | | 3.00/.203 | 13/16 | 3/4 | G3 |

## Giant Vac

| | OREGON | OEM No. | Length | Center | Outer | C to C | W / T | Off | Lift | Prod. Code |
|---|---|---|---|---|---|---|---|---|---|---|
| (2) for 32" cut, (3) for 48" cut | **93-005** | 21537<br>3021537<br>3021584 | **16-1/4** | 5/8 | 1/4 | 1-5/8 | 2.50/.250 | 0 | 1-3/16 | |
| Gator® G3™ | **96-310** | | 16-1/4 | 5/8 | | | 2.50/.203 | 0 | 3/4 | G3 |
| Gator G5™ | **596-310** | | 16-1/4 | 5/8 | | | 3.00/.203 | 0 | 1 | High-Lift Xtended Fusion® G5 |
| Gator G6™ | **396-716** | | 16-1/4 | 5/8 | | | 3.00/.250 | 0 | 1 | Heavy-Duty High-Lift Xtended Fusion® G6 |
| (2) for 36" cut, (3) for 52" cut | **93-006** | 21536<br>3021536 | **18** | 5/8 | 1/4 | 1-5/8 | 2.50/.250 | 0 | 1-3/16 | Xtended |
| Gator G3 | **96-344** | | 18 | 5/8 | | | 2.50/.203 | 0 | 3/4 | G3 |
| Gator G5 | **596-344** | | 18 | 5/8 | | | 3.00/.203 | 0 | 1 | High-Lift Xtended Fusion® G5 |
| Gator G6 | **396-726** | | 18 | 5/8 | | | 3.00/.250 | 0 | 1 | Heavy-Duty High-Lift Xtended Fusion® G6 |

B

# Blades - OEM Replacements

## Giant Vac

| | OREGON | OEM No. | Length | Center | Outer | C to C | W / T | Off | Lift | Prod. Code |
|---|---|---|---|---|---|---|---|---|---|---|
| (3) for 61" cut | **93-008** | 21538<br>3021538 | **21** | 5/8 | 1/4 | 1-5/8 | 2.50/.250<br>Xtended | 0 | 1-3/16 | |
| (3) for 61" cut, mulching | **91-596** | | 21 | 5/8 | | | 2.50/.203 | 0 | 1 | |
| Gator G3 | **96-347** | | 21 | 5/8 | | | 2.50/.203 | 0 | 3/4 | G3 |
| Gator G5 | **596-347** | | 21 | 5/8 | | | 3.00/.203<br>High-Lift Xtended Fusion® | 0 | 1 | G5 |
| Gator G6 | **396-727** | | 21 | 5/8 | | | 3.00/.250<br>Heavy-Duty High-Lift Xtended Fusion® | 0 | 1 | G6 |

## Grasshopper

| | OREGON | OEM No. | Length | Center | Outer | C to C | W / T | Off | Lift | Prod. Code |
|---|---|---|---|---|---|---|---|---|---|---|
| (3) for 44" cut, (1) 91-557 & (2) 91-558 for 48" cut | **91-557** | 320231 | **15** | 1/2 | | | 2.50/.250 | 5/16 | 3/4 | |
| (3) for 44" cut, (1) 91-536 & (2) 91-532 for 48" cut, high-lift | **91-536** | 320234 | 15 | 1/2 | | | 2.50/.250 | 5/16 | 1 | |
| (3) for 44" cut | **92-150** | | 15 | 1/2 | | | 2.50/.203 | 5/16 | 1-1/4 | |
| Gator® G3™ | **96-343** | 320233<br>320235<br>320320 | 15 | 1/2 | | | 2.50/.203<br>Xtended | 5/16 | 1 | G3 |
| Gator G6™ | **396-713** | | 15 | 1/2 | | | 3.00/.250<br>Heavy-Duty High-Lift Xtended Fusion® | 5/16 | 1 | G6 |
| (3) for 52" cut, (2) 91-558 & (1) 91-557 for 48" cut | **91-558** | 320236 | **18** | 1/2 | | | 2.50/.250 | 5/16 | 3/4 | |
| (3) for 52" cut, contour blade | **91-535** | 320238 | 18 | 1/2 | | | 2.50/.250 | 5/16 | 1-3/16 | |
| (3) for 52" cut, (2) 91-532 & (1) 91-536 for 48" cut, high-lift | **91-532** | 320239 | 18 | 1/2 | | | 2.50/.250 | 5/16 | 1 | |

GROUP CONTINUES

B

## Grasshopper

| | OREGON | OEM No. | Length | Center | Outer | C to C | W / T | Off | Lift | Prod. Code |
|---|---|---|---|---|---|---|---|---|---|---|
| GROUP CONTINUES | | | | | | | | | | |
| (3) for 52" cut, mulching | **91-538** | 320240 | 18 | 1/2 | | | 2.50/.203 | 0 | 1 | |
| Gator G3 | **96-329** | 320241<br>320321 | 18 | 1/2 | | | 2.50/.203 | 5/16 | 1 | G3 |
| Gator G5™ | **596-329** | | 18 | 1/2 | | | 3.00/.203 | 5/16 | 1 | High-Lift Xtended Fusion® G5 |
| Gator G6 | **396-729** | | 18 | 1/2 | | | 3.00/.250 | 5/16 | 1 | Heavy-Duty High-Lift Xtended Fusion® G6 |
| (3) for 61" cut, (2) for 41" cut, high-lift | **91-531** | 320243<br>320245<br>320245B | **21** | 1/2 | | | 2.50/.250 | 5/16 | 1 | |
| (3) for 61" cut, (2) for 41" cut, high-lift | **91-534** | 320244 | 21 | 1/2 | | | 2.50/.250 | 5/16 | 1-3/16 | |
| (3) for 61" cut, (2) for 41" cut, extreme high-lift | **91-537** | 320246 | 21 | 1/2 | | | 3.00/.250 | 5/16 | 1-1/4 | |
| (3) for 61" cut, (2) for 41" cut, low-lift | **91-547** | 320242 | 21 | 1/2 | | | 2.50/.250 | 5/16 | 3/4 | |
| (3) for 61" cut, (2) for 41" cut, mulching | **91-539** | 320247 | 21 | 1/2 | | | 2.50/.203 | 0 | 1 | |
| Gator® G3™ | **96-346** | 320322 | 21 | 1/2 | | | 2.50/.203 | 5/16 | 1 | G3 |
| Gator G5™ | **596-346** | | 21 | 1/2 | | | 3.00/.203 | 5/16 | 1 | High-Lift Xtended Fusion® G5 |
| Gator G6™ | **396-712** | | 21 | 1/2 | | | 3.00/.250 | 5/16 | 1 | Heavy-Duty High-Lift Xtended Fusion® G6 |
| (3) for 72" cut, high-lift | **91-533** | 320251<br>320253 | **25** | 1/2 | | | 2.50/.250 | 5/16 | 1 | |
| (3 ) for 72" cut, low-lift | **91-544** | 320250 | 25 | 1/2 | | | 2.50/.250 | 5/16 | 3/4 | |

GROUP CONTINUES

B

# Blades - OEM Replacements

## Grasshopper

| | OREGON | OEM No. | Length | Center | Outer | C to C | W / T | Off | Lift | Prod. Code |
|---|---|---|---|---|---|---|---|---|---|---|
| | **91-036** | 320255 | 25 | 1/2 | | | 2.50/.250 | 1/4 | 1-1/16 | |
| (3) for 72" cut, mulching | | | | | | | Xtended | | | |
| | **92-164** | | 25 | 1/2 | | | 2.50/.203 | 0 | 1 | |
| (3) for 72" cut | | | | | | | | | | |
| | **96-778** | 320254 | 25 | 1/2 | | | 2.50/.250 | 5/16 | 3/4 | G3 |
| Gator G3 | | | | | | | | | | |
| | **396-778** | 320252<br>320323 | 25 | 1/2 | | | 3.00/.250 | 5/16 | 1 | G6 |
| Gator G6 | | | | | | | Heavy-Duty | High-Lift | Xtended | Fusion® |

## Gravely

| | | | | | | | | | | |
|---|---|---|---|---|---|---|---|---|---|---|
| | **92-040** | 03498400<br>08899800 | **13-7/8** | 5/8 | | | 2.00/.203 | 1/8 | 1-1/16 | |
| (3) for 40" cut, (915035) (915051) (915075) Zoom1640, (915043) (915063) (915065) (915317) (915502) Zoom1540, (915063) 1540Mini Zoom, 915067 Zoom1740, (915077) (915087-000101 HVZ) (915087) (915103) (915600) Zoom1840, 915133 Zoom2040 | | | | | | | Xtended | | | |
| | **91-244** | 014668 | 13-7/8 | 5/8 | | | 2.00/.203 | 1/8 | 1-1/16 | |
| (3) for 40" cut, high-lift, 31220, 34427, 38685, 39000, 45810, (49225) (51973) (834026) (834030) GEM, 885005, 887020, 887029, (915034) (915074) ZT1640, (915042) (915042) ZT1540, (915044) ZT1740, 915076 ZT1840, 991003 PM100Z, 91005-000101 PROMASTER100 | | | | | | | | | | |
| | **96-040** | 00272800<br>01600500 | 13-7/8 | 5/8 | | | 2.25/.203 | 0 | 3/4 | G3 |
| Gator® G3™ | | | | | | | | | | |
| | **92-217** | 02961600 | **14-1/2** | 5/8 | | | 2.50/.203 | 5/16 | 1-1/8 | |
| (3) for 42" cut | | | | | | | | | | |
| | **96-808** | | 14-1/2 | 5/8 | | | 2.50/.203 | 5/16 | 3/4 | G3 |
| Gator G3 | | | | | | | | | | |
| | **92-153** | 00450200<br>02982000 | **16-3/16** | 5/8 | | | 2.50/.250 | 5/16 | 1-1/8 | |
| (3) for 44" and 48" cut, Compact Pro, Pro Master 44Z, 48Z, 144H, 148H, 144i, 148i, 144M, 148M, 144XDZ, 148XDZ, Pro Turn 148, ZT 2344, 2348, 2644HD, 2648HD | | | | | | | | | | |

GROUP CONTINUES

## Gravely

| | OREGON | OEM No. | Length | Center | Outer | C to C | W / T | Off | Lift | Prod. Code |
|---|---|---|---|---|---|---|---|---|---|---|
| Gator G5™ | **596-816** | | 16-3/16 | 5/8 | | | 3.00/.203 | 3/8 | 1 | High-Lift Xtended Fusion® G5 |
| Gator G6™ | **396-809** | | 16-3/16 | 5/8 | | | 3.00/.250 | 3/8 | 1 | Heavy-Duty High-Lift Xtended Fusion® G6 |
| (3) for 48" cut, 2348, ZT2048, ZT2348, GR1548FX, GR1548FL, HR1548FX, HE1748FL, GR1548FXP, HR1548FLP, HE1748FX, HE1748FXP, HE1748FLP, GR1332FXPCE, (992043) (992078) (992093) (992311) PM148Z, PM144Z, 992101 ZT2148XL, 992143 ZT 2348XL, 992143 ZT 2348XL | **91-183** | 04919100 | **16-1/4** | 5/8 | | | 2.50/.250 | 0 | 1 | |
| (3) for 48" cut | **91-180** | | 16-1/4 | 5/8 | | | 2.50/.187 | 0 | 1 | |
| (3) for 48" cut | **91-313** | | 16-1/4 | 5/8 | | | 2.50/.203 | 0 | 1 | |
| (3) for 48" cut | **99-127** | | 16-1/4 | 5/8 | | | 2.50/.203 | 0 | 1-1/16 | |
| (3) for 48" cut, mulching | **91-368** | | 16-1/4 | 5/8 | | | 2.50/.203 | 0 | 1 | Xtended |
| Gator® G3™ | **96-310** | | 16-1/4 | 5/8 | | | 2.50/.203 | 0 | 3/4 | G3 |
| Gator G5™ | **596-310** | | 16-1/4 | 5/8 | | | 3.00/.203 | 0 | 1 | High-Lift Xtended Fusion® G5 |
| Gator G6™ | **396-716** | | 16-1/4 | 5/8 | | | 3.00/.250 | 0 | 1 | Heavy-Duty High-Lift Xtended Fusion® G6 |
| (3) for 48" cut | **91-620** | | **16-1/2** | 5/8 | | | 2.50/.203 | 0 | 1 | Xtended |
| (3) for 48" cut | **92-145** | | 16-1/2 | 5/8 | | | 2.50/.203 | 0 | 1 | |
| (3) for 48" cut | **92-036** | | 16-1/2 | 5/8 | | | 2.50/.250 | 0 | 1 | |

GROUP CONTINUES

GROUP CONTINUES

# Blades - OEM Replacements

## Gravely

GROUP CONTINUES

| OREGON | OEM No. | Length | Center | Outer | C to C | W / T | Off | Lift | Prod. Code |
|---|---|---|---|---|---|---|---|---|---|
| **91-621** | | 16-1/2 | 5/8 | | | 3.00/.203 | 0 | 1-1/2 | |
| (3) for 48" cut, high-lift | | | | | | | | | |
| **92-207** | GDU10230 | 16-1/2 | 5/8 | | | 2.50/.203 | 0 | 13/16 | |
| | | | | | | Xtended | | | |
| (3) for 48" cut, low-lift | | | | | | | | | |
| **92-737** | | 16-1/2 | 5/8 | | | 2.50/.203 | 0 | 1-1/16 | |
| | | | | | | Xtended | | | |
| (3) for 48" cut | | | | | | | | | |
| **99-126** | | 16-1/2 | 5/8 | | | 2.50/.203 | 0 | 1-1/16 | |
| (3) for 48" cut | | | | | | | | | |
| **92-743** | | 16-1/2 | 5/8 | | | 2.50/.203 | 0 | 1 | |
| | | | | | | Xtended | | | |
| (3) for 48" cut, mulching | | | | | | | | | |
| **96-308** | | 16-1/2 | 5/8 | | | 2.50/.203 | 0 | 1 | |
| | | | | | | | | | G3 |
| Gator® G3™ | | | | | | | | | |
| **596-308** | | 16-1/2 | 5/8 | | | 3.00/.203 | 0 | 1 | |
| | | | | | | High-Lift Xtended Fusion® | | | G5 |
| Gator G5™ | | | | | | | | | |
| **396-735** | | 16-1/2 | 5/8 | | | 3.00/.250 | 0 | 1 | |
| | | | | | | Heavy-Duty High-Lift Xtended Fusion® | | | G6 |
| Gator G6™ | | | | | | | | | |
| **91-003** | 03123700<br>03123751 | **16-9/16** | 3/4 | | | 2.50/.203 | 7/16 | 7/8 | |
| (3) for 48" cut | | | | | | | | | |
| **91-242** | 011234<br>08861600<br>08899300<br>11234 | **17** | 5/8 | | | 2.00/.203 | 5/16 | 1-1/8 | |
| (2) for 32" & 34" cut, (3) for 50" cut, PM50, PM300, GEM, Mini-ZT1434, Mini-ZT1540, Mini-ZT1534, HVZ1840, ZTXL1634, ZT2350, ZT2250, ZT1840, 1734ZT, 2040ZT, 2250ZT, ZT2350, ZTXL1734, ZT2450, ZTXL1734CARB, 915132 2350ZT, 915403 2040YJ, 915404 2550YJ | | | | | | | | | |
| **396-805** | 08866800 | 17 | 5/8 | | | 3.00/.250 | 5/16 | 1 | |
| | | | | | | Heavy-Duty High-Lift Xtended Fusion® | | | G6 |
| Gator G6 | | | | | | | | | |

B

## Gravely

| | OREGON | OEM No. | Length | Center | Outer | C to C | W / T | Off | Lift | Prod. Code |
|---|---|---|---|---|---|---|---|---|---|---|
| Gator® G3™ | **96-323** | 046998<br>08779200<br>08779251<br>C046998 | **17** | 5/8 | | | 2.50/.203 | 0 | 1 | G3 |
| Gator G5™ | **596-323** | | 17 | 5/8 | | | 3.00/.203 | 0 | 1 | High-Lift Xtended Fusion® G5 |
| Gator G6™ | **396-723** | | 17 | 5/8 | | | 3.00/.250 | 0 | 1 | Heavy-Duty High-Lift Xtended Fusion® G6 |
| (2) for 34" cut, high-lift, Compact Pro, GR1334FX, GR1334FXP, PM34M, PM34Z | **92-158** | 09082400<br>09246700 | **17-1/16** | 5/8 | | | 2.50/.250 | 5/16 | 1-1/8 | |
| (2) for 36" cut, (3) for 52" cut | **91-235** | GDU10231 | **18** | 5/8 | | | 2.50/.250 | 0 | 7/8 | Xtended |
| (2) for 36" cut, (3) for 52" cut, high-lift | **92-151** | 00450300<br>03253800 | 18 | 5/8 | | | 2.50/.250 | 5/16 | 1-1/8 | |
| Gator G5 | **596-817** | 00273100<br>04916400 | 18 | 5/8 | | | 3.00/.203 | 5/16 | 1 | High-Lift Xtended Fusion® G5 |
| Gator G6 | **396-806** | | 18 | 5/8 | | | 3.00/.250 | 5/16 | 1 | Heavy-Duty High-Lift Xtended Fusion® G6 |
| (3) for 54" cut, ZTXL54, ZTXL2554 | **92-157** | 02961700 | **18-7/16** | 5/8 | | | 2.50/.203 | 5/16 | 1-1/8 | |
| Gator G5 | **596-818** | | 18-7/16 | 5/8 | | | 3.00/.203 | 5/16 | 1 | High-Lift Xtended Fusion® G5 |
| 21" cut | **91-005** | 0113700<br>01182400<br>0137051 | **20-9/16** | 3/8 | | | 2.75/.134 | 5/16 | 1 | |
| Gator G3 | **96-041** | | 20-9/16 | 3/8 | | | 2.75/.134 | 1/4 | 3/4 | G3 |

B

# Blades - OEM Replacements

## Gravely

| | OREGON | OEM No. | Length | Center | Outer | C to C | W / T | Off | Lift | Prod. Code |
|---|---|---|---|---|---|---|---|---|---|---|
| (2) for 40" deck, (3) for 60" deck | **91-255** NEW | 089046 | **20-1/2** | 5/8 | | | 2.00/.250 | 0 | 5/8 | |
| (3) for 60" cut, high-lift | **91-239** | 048864<br>08781800<br>48864 | 20-1/2 | 5/8 | | | 2.50/.250 | 3/4 | 1-1/16 | |
| (3) for 60" cut | **91-253** | 025124<br>046999<br>08979600<br>8979651 | **20-1/2** | 5/8 | | | 2.50/.250 | 0 | 1-1/8 | |
| Gator® G3™ | **96-319** | | 20-1/2 | 5/8 | | | 2.50/.203 | 0 | 3/4 | G3 |
| Gator G5™ | **596-319** | | 20-1/2 | 5/8 | | | 3.00/.203 | 0 | 1 | High-Lift Xtended Fusion® G5 |
| Gator G6™ | **396-740** | | 20-1/2 | 5/8 | | | 3.00/.250 | 0 | 1 | Heavy-Duty High-Lift Xtended Fusion® G6 |
| (3) for 60" cut, Pro Turn 160 XDZ, Pro Turn 260 XDZ and Pro Master 260 XDZ | **92-159** | 03253900<br>09081200 | **20-1/2** | 5/8 | | | 2.50/.250 | 5/16 | 1-1/8 | |
| Gator G5 | **596-815** | | 20-1/2 | 5/8 | | | 3.00/.203 | 5/16 | 1 | High-Lift Xtended Fusion® G5 |
| Gator G6 | **396-807** | | 20-1/2 | 5/8 | | | 3.00/.250 | 5/16 | 1 | Heavy-Duty High-Lift Xtended Fusion® G6 |
| (2) for 40" cut, 1440 RER, GLT440, Sport ZT1440, ZT1740 | **191-015** | 03624700<br>03624751 | **20-1/2** | 3/4 | | | 2.50/.187 | 1/2 | 15/16 | Xtended 100 |
| (2) for 40" cut, high-lift, 1440 RER, GLT440, Sport ZT1440, ZT1740 | **91-144** | | 20-1/2 | 3/4 | | | 3.00/.203 | 1/2 | 1-5/16 | |

GROUP CONTINUES

## Gravely

| | OREGON | OEM No. | Length | Center | Outer | C to C | W / T | Off | Lift | Prod. Code |
|---|---|---|---|---|---|---|---|---|---|---|
| | | | GROUP ↑ CONTINUES | | | | | | | |
| Gator G3 | **96-677** | | 20-1/2 | 3/4 | | | 3.00/.203 | 1/2 | 1 | G3 |
| (3) for 61" cut | **91-626** | | **21** | 5/8 | | | 2.50/.203 | 0 | 1 | |
| (3) for 61" cut | **91-209** | | 21 | 5/8 | | | 2.50/.250 | 0 | 1 | Xtended |
| (3) for 61" cut | **91-638** | | 21 | 5/8 | | | 2.50/.203 | 0 | 1 | |
| (3) for 61" cut, high-lift | **91-628** | | 21 | 5/8 | | | 3.00/.203 | 0 | 1-1/2 | Xtended |
| (3) for 61" cut, mulching | **91-596** | | 21 | 5/8 | | | 2.50/.203 | 0 | 1 | |
| (3) for 61" cut | **91-308** | GDU10232 | 21 | 5/8 | | | 2.50/.203 | 0 | 1 | |
| (3) for 61" cut | **95-078** | | 21 | 5/8 | | | 2.50/.250 | 0 | 1 | |
| Gator® G3™ | **96-347** | | 21 | 5/8 | | | 2.50/.203 | 0 | 3/4 | G3 |
| Gator G5™ | **596-347** | | 21 | 5/8 | | | 3.00/.203 | 0 | 1 | High-Lift Xtended Fusion® G5 |
| Gator G6™ | **396-727** | | 21 | 5/8 | | | 3.00/.250 | 0 | 1 | Heavy-Duty High-Lift Xtended Fusion® G6 |
| Gator G3 | **92-602** | 01584500 | **21-15/16** | 3/4 | | | 2.50/.203 | 1/2 | 3/4 | G3 |
| (3) for 66" cut, Pro Master 260M, 266H, Pro Turn 266, 266H, 466 | **92-152** | 00360200 | **22-1/2** | 5/8 | | | 2.50/.250 | 5/16 | 1-1/8 | |

B

# Blades - OEM Replacements

## Gravely

| | OREGON | OEM No. | Length | Center | Outer | C to C | W / T | Off | Lift | Prod. Code |
|---|---|---|---|---|---|---|---|---|---|---|
| (1) for 24" cut, walk-behind | **92-415** | 04159600 | **23-3/4** | 1 | | | 2.50/.203 | 0 | 1 | |
| Gator® G3™ | **96-415** | | 23-3/4 | 1 | | | 2.50/.187 | 0 | 3/4 | G3 |
| (3) for 72" cut, high-lift | **91-254** | 047685<br>08983800 | **24-1/2** | 5/8 | | | 2.50/.250 | 3/4 | 1-1/16 | |
| (3) for 72" cut | **92-417**<br>NEW | 09290600 | 24-1/2 | 5/8 | | | 2.50/.250 | 5/16 | 1-1/4 | |
| (3) for 72" cut | **92-416** | 09290500 | **24-9/16** | 5/8 | | | 2.50/.250 | 5/16 | 3/4 | |
| Gator G6™ | **392-416** | 09254700<br>09290600 | 24-9/16 | 5/8 | | | 3.00/.250 | 5/16 | 1 | Heavy-Duty High-Lift Xtended Fusion® G6 |

## Great Dane

| | | | | | | | | | | |
|---|---|---|---|---|---|---|---|---|---|---|
| (3) for 48" cut, all models | **92-207** | D18086<br>GDU10230 | **16-1/2** | 5/8 | | | 2.50/.203 | 0 | 13/16 | Xtended |
| Gator G3 | **96-308** | | 16-1/2 | 5/8 | | | 2.50/.203 | 0 | 1 | G3 |
| Gator G5™ | **596-308** | | 16-1/2 | 5/8 | | | 3.00/.203 | 0 | 1 | High-Lift Xtended Fusion® G5 |
| Gator G6 | **396-735** | | 16-1/2 | 5/8 | | | 3.00/.250 | 0 | 1 | Heavy-Duty High-Lift Xtended Fusion® G6 |
| (3) for 52" cut, all models | **91-235** | D18037<br>GDU10231 | **18** | 5/8 | | | 2.50/.250 | 0 | 7/8 | Xtended |
| Gator G3 | **96-344** | | 18 | 5/8 | | | 2.50/.203 | 0 | 3/4 | G3 |

GROUP CONTINUES

## Great Dane

| | OREGON | OEM No. | Length | Center | Outer | C to C | W / T | Off | Lift | Prod. Code |
|---|---|---|---|---|---|---|---|---|---|---|
| Gator G5 | 596-344 | | 18 | 5/8 | | | 3.00/.203 | 0 | 1 | High-Lift Xtended Fusion® G5 |
| Gator G6 | 396-726 | | 18 | 5/8 | | | 3.00/.250 | 0 | 1 | Heavy-Duty High-Lift Xtended Fusion® G6 |
| (3) for 61" cut, all models | 91-308 | D18036<br>GDU10232 | 21 | 5/8 | | | 2.50/.203 | 0 | 1 | |
| (3) for 61" cut, mulching | 91-596 | | 21 | 5/8 | | | 2.50/.203 | 0 | 1 | |
| Gator® G3™ | 96-347 | | 21 | 5/8 | | | 2.50/.203 | 0 | 3/4 | G3 |
| Gator G5™ | 596-347 | | 21 | 5/8 | | | 3.00/.203 | 0 | 1 | High-Lift Xtended Fusion® G5 |
| Gator G6™ | 396-727 | | 21 | 5/8 | | | 3.00/.250 | 0 | 1 | Heavy-Duty High-Lift Xtended Fusion® G6 |

## Honda

| | OREGON | OEM No. | Length | Center | Outer | C to C | W / T | Off | Lift | Prod. Code |
|---|---|---|---|---|---|---|---|---|---|---|
| 21" cut, walk-behind mower fits HR214, 21KS, 21S, A21, S21, 214, 215, 216, HRA214 & HRA216 | 91-291 | 72511-960-000<br>72511-960-004<br>72511-VA2-690<br>72511-VA4-000<br>M2100-576-91938 | 20-13/16 | 13/16 | 3/8 | 3-7/16 | 2.25/.149 | 0 | 5/8 | |
| 21" cut, walk-behind, high-lift | 91-444 | 72511-960-020 | 20-13/16 | 13/16 | 3/8 | 3-7/16 | 2.25/.149 | 3/16 | 1-1/16 | |
| Gator G3 | 90-651 | | 20-13/16 | 13/16 | 3/8 | 3-7/16 | 2.25/.187 | 0 | 3/4 | G3 |
| (1) 91-516 & (1) 91-517 for 21" cut Harmony Quada-Cut mower, Harmony II HRS | 91-516 | 72511-VE2-000<br>72511-VG4-K00 | 20-7/8 | 13/16 | 3/8 | 3-7/16 | 2.25/.120 | 1 | 11/16 | |
| (1) 91-516 & (1) 91-517 for 21" cut Harmony Quada-Cut mower | 91-517 | 72531-VE2-010<br>72531-VE2-020 | 21 | 1-1/4 | 7/16 | 3-7/16 | 2.75/.120 | 1/2 | 0 | |

# Blades - OEM Replacements

## Honda

| | OREGON | OEM No. | Length | Center | Outer | C to C | W / T | Off | Lift | Prod. Code |
|---|---|---|---|---|---|---|---|---|---|---|
| Upper blade for 21" walk-behind mowers, Micro Cut, Fits Versamow HRX217, use with 91-519 | **191-518** NEW | 72531-VH7-000 | **21** | 7/8 | 7/16 | 3-1/16 | 4.75/.120 | 1 | 7/8 | |
| Lower blade for 21" walk-behind mowers, Micro Cut, Fits Versamow HRX217, use with 91-518 | **191-519** NEW | 72511-VH7-000 | 21 | 1-1/4 | 3/8 | 3-1/2 | 2.50/.120 | 1/2 | 0 | |
| HRC216K2/K3HXA bottom blade | **92-101** | 72511-VK6-000 | **21-1/4** | 3/4 | 3/8 | 3-1/2 | 3.25/.120 | 1-5/16 | 1 | |
| HRC216K2 top blade | **92-102** | 72531-VK6-010 | 20-7/8 | 1-1/4 | 9/16 | 3-1/2 | 2.75/.134 | 9/16 | 0 | |

## Huskee

| | OREGON | OEM No. | Length | Center | Outer | C to C | W / T | Off | Lift | Prod. Code |
|---|---|---|---|---|---|---|---|---|---|---|
| 21" cut, 911000 series zone start walk-behinds | **91-005** | 11285<br>11370<br>1137059 | **20-9/16** | 3/8 | | | 2.75/.134 | 5/16 | 1 | |
| Gator® G3™ | **96-041** | | 20-9/16 | 3/8 | | | 2.75/.134 | 1/4 | 3/4 | G3 |

## Husqvarna

| | OREGON | OEM No. | Length | Center | Outer | C to C | W / T | Off | Lift | Prod. Code |
|---|---|---|---|---|---|---|---|---|---|---|
| Gator G3 | **96-349** | 50668701<br>506668701<br>506676501<br>531005011 | **11-15/16** | 3/8 | 5/16 | 2-3/8 | 2.50/.203 | 0 | 3/4 | Xtended G3 |
| (3) for 42" cut, EZ (4216, 4217, 4220, 4624, 4822, 4824, 5224, 5226), RZ(4219, 4222), YT42XLS, YTH22V42LS | **95-084** | 539112078 | **14-5/8** | 5 pt. Star | | | 2.50/.203 | 0 | 1 | |
| Gator G3 | **95-088** | 573953001<br>577146101 | 14-5/8 | 5 pt. Star | | | 2.50/.203 | 0 | 3/4 | G3 |
| Gator G5™ | **595-088** | | 14-5/8 | 5 pt. Star | | | 3.00/.164 | 0 | 1 | High-Lift Xtended Fusion® G5 |
| (3) for 38" cut, model 970-12 | **95-058** | 539106038<br>103274<br>539103274 | **14-7/8** | 5/8 | | | 2.50/.203 | 0 | 1 | Xtended |

B

## Husqvarna

| | OREGON | OEM No. | Length | Center | Outer | C to C | W / T | Off | Lift | Prod. Code |
|---|---|---|---|---|---|---|---|---|---|---|
| (2) for 44" cut, models GT160, YT161H | **95-014** | 100140M<br>106635X<br>122265X<br>25034<br>25034R<br>532025034<br>532106635<br>532122265<br>91712265X | **15-3/8** | 3/8 | | | 2.25/.187 | 0 | 1 | |
| Gator G3 | **95-607** | | 15-3/8 | 3/8 | | | 2.25/.187 | 0 | 3/4 | G3 |
| (3) for 44" cut | **95-006** | 917532130652 | **15-3/8** | 5 pt. Star | | | 2.25/.149 | 1/8 | 15/16 | |
| (3) for 44" cut, heavy-duty | **95-049** | | 15-3/8 | 5 pt. Star | | | 2.25/.187 | 0 | 1 | |
| (3) for 46" cut, high-lift | **95-052** | 144767<br>157033<br>159705<br>170698<br>176084<br>532144767<br>532157033<br>532157353<br>532159705<br>532170698<br>532176084 | **15-1/2** | 5 pt. Star<br><br>917144767<br>917157033<br>917170698<br>917532144767<br>917532157353<br>917532170698<br>917532176084 | | | 2.25/.149 | 1/8 | 1 | |
| (3) for 46" cut, mulching | **95-045** | 130652<br>145708<br>152443<br>163819<br>532130652<br>532145708<br>532152443<br>917145708CS<br>917145708MS | 15-1/2 | 5 pt. Star<br><br>917152443P<br>917163819<br>91730652MS<br>917532145708<br>917532152443<br>918152443 | | | 2.25/.149 | 1/8 | 1 | |
| Gator® G3™ | **95-614** | | 15-1/2 | 5 pt. Star | | | 2.50/.187 | 0 | 3/4 | G3 |
| Gator G5™ | **595-614** | | 15-1/2 | 5 pt. Star | | | 3.00/.164 | 0 | 1 | High-Lift Xtended Fusion® G5 |

B

# Blades - OEM Replacements

## Husqvarna

| | OREGON | OEM No. | Length | Center | Outer | C to C | W / T | Off | Lift | Prod. Code |
|---|---|---|---|---|---|---|---|---|---|---|
| (2) for 32" cut, (3) for 48" cut | **99-127** | 100340<br>101366<br>539100340<br>539101366<br>539106040 | **16-1/4** | 5/8 | | | 2.50/.203 | 0 | 1-1/16 | |
| (2) for 32" cut, (3) for 48" cut | **91-180** | | 16-1/4 | 5/8 | | | 2.50/.187 | 0 | 1 | |
| (2) for 32" cut, (3) for 48" cut, Heavy Duty | **91-183** | | 16-1/4 | 5/8 | | | 2.50/.250 | 0 | 1 | |
| (2) for 32" cut, (3) for 48" cut | **91-313** | | 16-1/4 | 5/8 | | | 2.50/.203 | 0 | 1 | |
| (2) for 32" cut, (3) for 48" cut, mulching | **91-368** | | 16-1/4 | 5/8 | | | 2.50/.203<br>Xtended | 0 | 1 | |
| Gator® G3™ | **96-310** | 539106041<br>539109756 | 16-1/4 | 5/8 | | | 2.50/.203 | 0 | 3/4 | G3 |
| Gator G5™ | **596-310** | | 16-1/4 | 5/8 | | | 3.00/.203<br>High-Lift Xtended Fusion® | 0 | 1 | G5 |
| Gator G6™ | **396-716** | | 16-1/4 | 5/8 | | | 3.00/.250<br>Heavy-Duty High-Lift Xtended Fusion® | 0 | 1 | G6 |
| (3) for 48" cut, EZ, EZC, GT, GTH, RZ, YT, YTH | **95-087** | 539113425<br>53911342529 | **16-1/4** | 5 pt. Star | | | 2.50/.203 | 0 | 1 | |
| Gator G5 | **595-087** | 522037401 | 16-1/4 | 5 pt. Star | | | 3.00/.164<br>High-Lift Xtended Fusion® | 0 | 1 | G5 |
| (3) for 48" cut | **195-062** | 173920<br>180054<br>512258301<br>532173920<br>532180054<br>539107519<br>575938201<br>575938301<br>577146201 | **16-11/16**<br><br><br>917173920<br>917532173920<br>917532180054<br>917539107519<br>917577203106<br>954633774 | 5 pt. Star | 5/16 | 3-15/16 | 2.50/.203<br>Xtended | 0 | 1-1/4 | 100 |

GROUP CONTINUES

## Husqvarna

| | OREGON | OEM No. | Length | Center | Outer | C to C | W / T | Off | Lift | Prod. Code |
|---|---|---|---|---|---|---|---|---|---|---|
| | | | GROUP CONTINUES | | | | | | | |
| Gator G3 | **96-615** | | 16-11/16 | 5 pt. Star | | | 2.50/.203 | 0 | 1 | G3 |
| Gator G5 | **596-615** | | 16-11/16 | 5 pt. Star | | | 3.00/.187 | 0 | 1 | High-Lift Xtended Fusion® G5 |
| (3) for 50" cut | **95-018** | 137380<br>532137380<br>917137380MS<br>917137380P<br>917532137380 | **17-3/8** | 5 pt. Star | | | 2.25/.149 | 1/8 | 15/16 | |
| (3) for 50" cut, high-lift | **95-050** | | 17-3/8 | 5 pt. Star | | | 2.25/.187 | 0 | 1 | |
| Gator G3 | **95-609** | | 17-3/8 | 5 pt. Star | | | 2.50/.187 | 0 | 3/4 | G3 |
| Gator® G5™ | **595-609** | | 17-3/8 | 5 pt. Star | | | 3.00/.164 | 0 | 1 | High-Lift Xtended Fusion® G5 |
| (3) for 50" cut | **95-027** | 121798X<br>532121798<br>532138496<br>917532121798 | **17-3/8** | 3/8 | | | 2.25/.187 | 0 | 1 | |
| (3) for 52" cut, GT52XLS, GTH27V52LS, GTH2752TF, GTH24V52LS, GTH26V52LS, GTH3052TDF | **95-077** | 574870801 | **17-3/4** | 5 pt. Star | | | 2.50/.203 | 0 | 1 | |
| Gator G5 | **595-077** | 575240701 | 17-3/4 | 5 pt. Star | | | 3.00/.164 | 0 | 1 | High-Lift Xtended Fusion® G5 |
| (2) for 36" cut, (3) for 52" cut | **91-256** | 100341<br>101485<br>539100341<br>539101485<br>539105712 | **18** | 5/8 | | | 2.50/.203 | 0 | 1 | Xtended |
| (2) for 36" cut, (3) for 52" cut, high-lift | **91-623** | | 18 | 5/8 | | | 3.00/.203 | 0 | 1-1/2 | Xtended |
| (2) for 36" cut, (3) for 52" cut, low-lift | **91-235** | | 18 | 5/8 | | | 2.50/.250 | 0 | 7/8 | Xtended |

GROUP CONTINUES

B

# Blades - OEM Replacements

## Husqvarna

GROUP CONTINUES

| | OREGON | OEM No. | Length | Center | Outer | C to C | W / T | Off | Lift | Prod. Code |
|---|---|---|---|---|---|---|---|---|---|---|
| (2) for 36" cut, (3) for 52" cut, mulching | **91-218** | | 18 | 5/8 | | | 2.50/.164 | 0 | 1 | Xtended |
| (2) for 36" cut, (3) for 52" cut, mulching | **91-335** | | 18 | 5/8 | | | 2.50/.203 | 0 | 1 | Xtended |
| (2) for 36" cut, (3) for 52" cut | **91-181** | | 18 | 5/8 | | | 2.50/.187 | 0 | 1 | Xtended |
| (2) for 36" cut, (3) for 52" cut | **91-184** | | 18 | 5/8 | | | 2.50/.250 | 0 | 1 | Xtended |
| (2) for 36" cut, (3) for 52" cut | **91-312** | | 18 | 5/8 | | | 2.50/.203 | 0 | 1 | Xtended |
| (2) for 36" cut, (3) for 52" cut | **91-622** | | 18 | 5/8 | | | 2.50/.203 | 0 | 1 | Xtended |
| (2) for 36" cut, (3) for 52" cut | **91-637** | | 18 | 5/8 | | | 2.50/.203 | 0 | 1 | |
| Gator® G3™ | **96-344** | | 18 | 5/8 | | | 2.50/.203 | 0 | 3/4 | G3 |
| Gator G5™ | **596-344** | | 18 | 5/8 | | | 3.00/.203 | 0 | 1 | High-Lift Xtended Fusion® G5 |
| Gator G6™ | **396-726** | | 18 | 5/8 | | | 3.00/.250 | 0 | 1 | Heavy-Duty High-Lift Xtended Fusion® G6 |
| (3) for 52" cut, EZ(4220, 4624, 4824, 5221, 5224, 5225, 5226, 6124), EZC4824, FD52M, MZ5225 | **95-085** | 510417801<br>539112079<br>577240301 | **18** | 5 pt. Star | | | 2.50/.203 | 0 | 1 | |
| Gator G5 | **595-085** | 521981501 | 18 | 5 pt. Star | | | 3.00/.164 | 0 | 1 | High-Lift Xtended Fusion® G5 |
| (2) for 36" cut, high-lift | **95-034** | 120262X<br>120626X<br>126338X<br>143969<br>532126338<br>532143969<br>917126338X | **18-3/16** | 3/8 | 3/8 | 10 | 2.50/.187 | 0 | 7/8 | |

B

## Husqvarna

| | OREGON | OEM No. | Length | Center | Outer | C to C | W / T | Off | Lift | Prod. Code |
|---|---|---|---|---|---|---|---|---|---|---|
| (2) for 36" cut | **95-036** | 127841<br>138496<br>532127841<br>532138496<br>532138969<br>917532127841<br>917532138496 | **18-3/16** | 5 pt. Star | | | 2.25/.134 | 1/8 | 1 | |
| (2) for 36" cut, heavy-duty version of 95-036 | **95-026** | | 18-3/16 | 5 pt. Star | | | 2.25/.187 | 1/8 | 1 | |
| Gator G3 | **95-613** | | 18-3/16 | 5 pt. Star | | | 2.50/.187 | 0 | 3/4 | G3 |
| Gator G5 | **595-613** | | 18-3/16 | 5 pt. Star | | | 3.00/.164 | 0 | 1 | High-Lift Xtended Fusion® G5 |
| (3) for 54" cut | **195-072** | 112053<br>187254<br>187256<br>33954<br>532187254<br>532187256<br>539112053<br>574292401<br>575938401 | **18-7/16** | 5 pt. Star | 5/16 | 3-15/16 | 2.75/.187 | 1/2 | 1-3/16 | Xtended 100 |
| | | 777187256<br>917187254<br>917532187254<br>917532187256<br>917539112053<br>917777187256 | | | | | | | | |
| (3) for 54" cut, mulching | **95-082** | 187255<br>24541<br>532187255<br>575938501<br>917532187255 | 18-7/16 | 5 pt. Star | | | 2.50/.187 | 5/16 | 13/16 | |
| Gator® G3,™ (3) for 54" cut | **95-605** | | 18-7/16 | 5 pt. Star | | | 2.50/.187 | 1/2 | 3/4 | G3 |
| Gator G5™ | **595-605** | | 18-7/16 | 5 pt. Star | | | 3.00/.164 | 1/2 | 1 | High-Lift Xtended Fusion® G5 |
| (3) for 54" cut, PZ29CE, PZ29FXBF, PZ34FXBF, PZ54, PZ5426FX, PZ6029FX, PZ6029PFX, PZ6030CV, PZ6034FX, PZ6034FXZT, PZ7234FX | **95-092** | 575265901 | **19** | 5/8 | | | 2.50/.250 | 0 | 1 | |
| (3) for 54" deck, Fits 54 in. PZ Series Zero Turn Riders | **95-095** NEW | 525525901 | 19 | 5/8 | | | 2.50/.250 | 0 | 1-1/4 | G3 |

B

# Blades - OEM Replacements

## Husqvarna

| | OREGON | OEM No. | Length | Center | Outer | C to C | W / T | Off | Lift | Prod. Code |
|---|---|---|---|---|---|---|---|---|---|---|
| Gator G6™ (3) for 52" cut | **396-800** | 544175710 | **19-3/16** | 7/16 | 3/8 | 1-9/16 | 3.00/.250 | 0 | 1 | Heavy-Duty High-Lift Xtended Fusion® G6 |
| (2) for 38" cut, high-lift | **95-031** | 121263X<br>143978<br>532121263<br>532143978<br>917121263X<br>917121263XMS<br>917532121263 | **19-1/4** | 3/8 | | | 2.25/.187 | 0 | 1 | |
| (2) for 38" cut | **195-033** | 12784<br>127842<br>131322<br>138970<br>513897001<br>531307221<br>532127842<br>532138497<br>532138970 | **19-1/4**<br><br><br><br><br>917127842<br>917138497MS<br>917138970<br>917532138497<br>917532138970 | 5 pt. Star | 3/8 | 3-1/8 | 2.25/.134 | 1/8 | 1-1/16 | Xtended 100 |
| (2) for 38" cut, heavy-duty version of 195-033 | **95-038** | | 19-1/4 | 5 pt. Star | | | 2.25/.187 | 1/8 | 1-1/16 | |
| (2) for 38" cut, high-lift | **95-047** | 532131322<br>917131322 | 19-1/4 | 5 pt. Star | | | 2.25/.187 | 0 | 1 | |
| (2) for 38" cut, mulching | **195-003** | 134148<br>134148M<br>134148X<br>138497<br>139774<br>193957<br>24692<br>531307220<br>532134148<br>532139774<br>532193957<br>539110324 | 19-1/4<br><br><br><br>581116301<br>777193957<br>917134148MS<br>917134148X<br>917139774<br>917139774MS<br>917532134148<br>917532139774<br>917532193957 | 5 pt. Star | 5/16 | 3-1/8 | 2.25/.134 | 1/8 | 7/8 | Xtended 100 |
| (2) for 38" cut, heavy-duty version of 195-033 | **95-099** | | 19-1/4 | 5 pt. Star | | | 2.25/.149 | 1/8 | 1 | |
| Gator® G3™ | **95-601** | | 19-1/4 | 5 pt. Star | | | 2.50/.187 | 0 | 3/4 | G3 |
| Gator G5™ | **595-601** | | 19-1/4 | 5 pt. Star | | | 3.00/.164 | 0 | 1 | High-Lift Xtended Fusion® G5 |

B

## Husqvarna

| | OREGON | OEM No. | Length | Center | Outer | C to C | W / T | Off | Lift | Prod. Code |
|---|---|---|---|---|---|---|---|---|---|---|
| 20" cut, walk-behind | **95-024** | 1935957<br>532850972<br>544080204<br>55139204<br>69229<br>701211<br>7133203<br>77193957<br>850972<br>8509725<br>917532850972 | **20** | 5/8 | 3/8 | 1-7/8 | 2.50/.149 | 9/16 | 7/8 | |
| | | | | | | | | | | |
| | | | | | | | | | | |
| | | | | | | | | | | |
| | | | | | | | | | | |
| | | 917532850972MS<br>91756400<br>917701211MS<br>917701211X417<br>917733203<br>917850972 | | | | | | | | |
| 20" cut, mulching, walk-behind | **95-051** | 133346<br>134871<br>145106<br>532129277<br>532133346<br>532134871<br>532145106<br>532700972<br>532751646<br>575164601<br>751646 | 20 | 5/8 | 3/8 | 1-7/8 | 2.25/.134 | 7/16 | 11/16 | |
| | | | | | | | | | | |
| | | | | | | | | | | |
| | | | | | | | | | | |
| | | | | | | | | | | |
| | | 917129277<br>917131694<br>917145106CS<br>917532129277<br>917532751646<br>917700972<br>917751646 | | | | | | | | |
| 20" cut, walk-behind, mulching | **95-044** | 204114-884<br>204340218<br>340218<br>531307212<br>532114884<br>532752233 | 20 | 5/8 | 3/8 | 1-7/8 | 2.00/.134 | 5/16 | 13/16 | |
| | | | | | | | | | | |
| | | | | | | | | | | |
| | | | | | | | | | | |
| | | 752233<br>917532752233 | | | | | | | | |
| 20" cut, walk-behind, mulching | **95-041** | | 20 | 5/8 | 3/8 | 1-7/8 | 2.50/.149 | 7/16 | 15/16 | |
| Gator® G5™ | **595-024** | | 20 | 5/8 | 3/8 | 1-7/8 | 3.00/.134 | 5/8 | 1 | |
| | | | | | | | High-Lift Xtended Fusion® | | | G5 |
| (2) for 42" cut | **195-032** | 127843<br>138498<br>138791<br>138971<br>531307224<br>532138498<br>532138971<br>586230101 | **21** | 5 pt. Star | | | 2.25/.149 | 1/8 | 1-1/16 | |
| | | | | | | | Xtended | | | 100 |
| | | 917127843<br>917131323<br>917138489MS<br>917532138498 | | | | | | | | |
| (2) for 42" cut, heavy-duty version of 195-032 | **195-039** | | 21 | 5 pt. Star | 5/16 | 3-1/8 | 2.25/.187 | 1/8 | 1-1/18 | |
| | | | | | | | Xtended | | | 100 |
| (2) for 42" cut, sand | **195-048** | 510417901<br>532131323 | 21 | 5 pt. Star | 5/16 | 3-1/8 | 2.25/.187 | 0 | 3/4 | |
| | | | | | | | Xtended | | | 100 |

GROUP CONTINUES

B

# Blades - OEM Replacements

## Husqvarna

GROUP CONTINUES

| | OREGON | OEM No. | Length | Center | Outer | C to C | W / T | Off | Lift | Prod. Code |
|---|---|---|---|---|---|---|---|---|---|---|
| (2) for 42" cut, mulching | **195-005** | | 21 | 5 pt. Star | | | 2.25/.134 | 1/8 | 7/8 | Xtended 100 |
| (2) for 42" cut, mulching, heavy-duty version of 195-005 | **195-019** | | 21 | 5 pt. Star | | | 2.25/.149 | 1/8 | 15/16 | Xtended 100 |
| (3) for 61" cut, EZ mowers | **95-086** | 539113312<br>577240401 | 21 | 5 pt. Star | | | 2.50/.203 | 0 | 1.000 | |
| Gator G3™ | **96-900** | 521981601 | 21 | 5 pt. Star | | | 2.50/.187 | 0 | 3/4 | G3 |
| Gator G5 | **596-900** | | 21 | 5 pt. Star | | | 3.00/.164 | 0 | 1 | High-Lift Xtended Fusion® G5 |
| (2) for 42" cut, Yard Tractor and Zero Turn mowers | **95-623** NEW | 586918101<br>586918102 | **21** | 5 pt. Star | | | 2.50/.250 | 0 | 1-1/4 | |
| Gator G5 (2) for 42" cut | **595-623** | 58618102<br>586918101 | 21 | 5 pt. Star | | | 3.00/.164 | 3/8 | 1 | High-Lift Xtended Fusion® G5 |
| (2) for 42" cut, mulching | **195-005** | 134149<br>24676<br>422719<br>531005085<br>531307223<br>532134149<br>532422719<br>539110460 | **21**<br><br>777134149<br>91724676<br>917532422719<br>917539110460<br>917777134149<br>954636867 | 5 pt. Star | | | 2.25/.134 | 1/8 | 7/8 | Xtended 100 |
| (2) for 42" cut, mulching | **195-019** | 139775<br>532139775<br>917139775P<br>917532139775 | 21 | 5 pt. Star | | | 2.25/.149 | 1/8 | 15/16 | Xtended 100 |
| Fits 42" decks, reaper blade | **195-093** | 5868569 | **21** | 5 pt. Star | 3/8 | 1-7/8 | 2.25/.149 | 7/16 | 1 | |
| (3) for 60" cut, PZ29CE, PZ29D, PZ29DCE, PZ29FXBF, PZ34FXBF, PZ5426FX, PZ6029D, PZ6029FX, PZ6029PFX, PZ6030CV, PZ6034FX, PZ6034FXZT, PZT6126FS, PZT6128BS, PZ7234FX | **95-078** | 539105711 | **21** | 5/8 | | | 2.50/.250 | 0 | 1 | |

GROUP CONTINUES

## Husqvarna

| | OREGON | OEM No. | Length | Center | Outer | C to C | W / T | Off | Lift | Prod. Code |
|---|---|---|---|---|---|---|---|---|---|---|
| | | | GROUP CONTINUES | | | | | | | |
| (3) for 61" cut, 2348, 30, 4217, 4819, 4821, 5221, 5223, 5225, 5227, 61, 6123, 6125, 6127, 6130, 6134, 7230 | **91-308** | 539101733<br>539102093 | 21 | 5/8 | | | 2.50/.203 | 0 | 1 | |
| (3) for 61" cut, mulching, 2348, 30, 4217, 4819, 4821, 5221, 5223, 5225, 5227, 61, 6123, 6125, 6127, 6130, 6134, 7230 | **91-596** | | 21 | 5/8 | | | 2.50/.203 | 0 | 1 | |
| Gator® G3™ | **96-347** | 522936601<br>539105714 | 21 | 5/8 | | | 2.50/.203 | 0 | 3/4 | G3 |
| Gator G5™ | **596-347** | | 21 | 5/8 | | | 3.00/.203 | 0 | 1 | High-Lift Xtended Fusion® G5 |
| Gator G6™ | **396-727** | | 21 | 5/8 | | | 3.00/.250 | 0 | 1 | Heavy-Duty High-Lift Xtended Fusion® G6 |
| 21" cut, walk-behind | **95-071** | 531307235<br>532159267 | **21** | 5/8 | 3/8 | 1-7/8 | 2.75/.134 | 1/2 | 1-1/8 | |
| 21" cut, walk-behind, mulching | **195-067** | 531300765<br>532189028<br>539111878 | 21 | 5/8 | 3/8 | 1-7/8 | 2.25/.134 | 9/16 | 1-1/16 | Xtended 100 |
| 21" cut, walk-behind | **95-057** | 532175064<br>532406712<br>539112787<br>581694101<br>917752234 | 21 | 5/8 | 3/8 | 1-7/8 | 2.75/.134 | 1/2 | 1-9/16 | |
| Fits 21" Craftsman and Husqvarna walk-behind mowers, 3-in-1 blade | **195-089** NEW | 406706 | 21 | 5/8 | 3/8 | 1-7/8 | 2.25/.134 | 9/16 | 1-5/16 | |
| Gator® G3™ | **95-621** | 580258101<br>580258102 | 21 | 5/8 | 3/8 | 1-7/8 | 2.50/.187 | 1/2 | 3/4 | G3 |
| Gator G5™ | **595-621** | | 21 | 5/8 | 3/8 | 1-7/8 | 3.00/.149 | 1/2 | 1 | High-Lift Xtended Fusion® G5 |

B

# Blades - OEM Replacements

## Husqvarna

| | OREGON | OEM No. | Length | Center | Outer | C to C | W / T | Off | Lift | Prod. Code |
|---|---|---|---|---|---|---|---|---|---|---|
| Gator G5 (1) for 21" cut, walk-behind | **595-622** | 180459<br>532180459<br>917532180459 | **21** | 1-1/4 | 3/8 | 3-7/16 | 3.00/.134 | 1/2 | 1 | High-Lift Xtended Fusion® G5 |
| 22" cut, walk-behind | **95-023** | 406713<br>532406713<br>532850973<br>701213<br>7133219<br>850973<br>91733219<br>917532406713<br>917532850973 | **21-3/4** | 5/8 | 3/8 | 1-7/8 | 2.50/.149 | 9/16 | 7/8 | |
| | | | 91756401<br>917701213<br>917701213MS<br>917850973<br>917850973MS | | | | | | | |
| 22" cut, walk-behind, mulching | **95-042** | | 21-3/4 | 5/8 | 3/8 | 1-7/8 | 2.50/.149 | 7/16 | 15/16 | |
| 22" cut, walk-behind, mulching | **195-021** | 33256<br>133348<br>134768<br>141114<br>152202<br>157101<br>700973<br>752234<br>7133269<br>91733256<br>91733269<br>204-3352-56 | 21-3/4 | 5/8 | 3/8 | 1-7/8 | 2.25/.134 | 1/2 | 15/16 | Xtended 100 |
| | | | 204335256<br>531301252<br>531307214<br>531307236<br>531307237<br>532134768<br>532141114<br>532152202<br>532355256 | | 532752234<br>575157101<br>917157101<br>917700973<br>917752234<br>917532134768<br>917532141114<br>917532752234 | | | | | |
| | **95-073** | 192682<br>406707<br>532192682<br>532406707<br>582931401<br>917192682<br>917192682X431<br>917532192682<br>917532406707 | 21-3/4 | 5/8 | 3/8 | 1-7/8 | 2.25/.134 | 9/16 | 1-3/16 | |
| Gator® G3™ | **95-602** | | **21-3/4** | 5/8 | 3/8 | 1-7/8 | 2.50/.187 | 1/2 | 3/4 | G3 |
| Gator G5™ | **595-602** | | 21-3/4 | 5/8 | 3/8 | 1-7/8 | 3.00/.149 | 1/2 | 1 | High-Lift Xtended Fusion® G5 |
| 22" cut, walk-behind | **95-076** | 420463<br>421825<br>532420463<br>532421825<br>532437601<br>917532420463<br>917532421825 | **21-15/16** | 5 pt. Star | | | 2.25/.134 | 9/16 | 13/16 | |

GROUP CONTINUES

## Husqvarna

| | OREGON | OEM No. | Length | Center | Outer | C to C | W / T | Off | Lift | Prod. Code |
|---|---|---|---|---|---|---|---|---|---|---|
| | | | GROUP CONTINUES | | | | | | | |
| Gator G3 | **95-615** | 580244001<br>585587701 | 21-15/16 | 5 pt. Star | | | 2.25/.134 | 9/16 | 3/4 | G3 |
| (2) for 46" cut, high-lift | **195-070** | 405380<br>532405380<br>575937901<br>777405380<br>917532405380<br>917777405380 | **22-7/8** | 5 pt. Star | 5/16 | 3-15/16 | 2.75/.164 | 5/16 | 1-1/8 | 100 |
| | | | | | | | Xtended | | | |
| (2) for 46" cut, heavy-duty | **95-370** | | 22-7/8 | 5 pt. Star | | | 2.50/.203 | 5/16 | 1-1/4 | |
| | | | | | | | Xtended | | | |
| (2) for 46" cut, mulching | **95-074** | 403107<br>531309715<br>532403107<br>917532403107 | 22-7/8 | 5 pt. Star | | | 2.25/.149 | 1/8 | 15/16 | |
| | | | | | | | Xtended | | | |
| Gator G3 | **96-370** | | 22-7/8 | 5 pt. Star | | | 2.75/.187 | 1/4 | 3/4 | |
| | | | | | | | Xtended | | | G3 |
| Gator G5 | **596-370** | | 22-7/8 | 5 pt. Star | | | 3.00/.187 | 5/16 | 1 | |
| | | | | | | | High-Lift Xtended Fusion® | | | G5 |
| Gator G6 (3) for 61" cut | **396-798** | 544175810 | **22-3/16** | 7/16 | 3/8 | 1-9/16 | 3.00/.250 | 0 | 1 | |
| | | | | | | | Heavy-Duty High-Lift Xtended Fusion® | | | G6 |
| (3) for 72" cut | **91-609** | | **25** | 5/8 | | | 2.50/.250 | 0 | 1 | |
| (3) for 72" cut, mulching, PZ29FXBF, PZ34FXBF, PZ5426FX, PZ6029FX, PZ6029PFX, PZ6030CV, PZ6034FX, PZ6034FXZT, PZ7234FX | **92-169** | 539105571<br>574860902 | 25 | 5/8 | | | 2.50/.203 | 0 | 1 | |
| | | | | | | | Xtended | | | |
| Gator® G6™ | **396-731** | 525341101<br>525544701<br>539105476<br>539110745<br>574481401 | 25 | 5/8 | | | 3.00/.250 | 0 | 1 | |
| | | | | | | | Heavy-Duty High-Lift Xtended Fusion® | | | G6 |

B

# Blades - OEM Replacements

## Husqvarna

| | OREGON | OEM No. | Length | Center | Outer | C to C | W / T | Off | Lift | Prod. Code |
|---|---|---|---|---|---|---|---|---|---|---|
| Gator G5, LT2213C, LT2213CA, LZ11577, LZ1577HRB, LZ1577RB, PO12530LT, PXT12530 | **595-807** | 419273<br>419273X431<br>419274<br>532419273<br>532419274<br>777419274 | **29-5/8** | 5 pt. Star | | | 3.00/.149 | 5/16 | 1<br>High-Lift Xtended Fusion® | G5 |
| | | | 917532419273<br>91777419274 | | | | | | | |

## Hustler

| | | | | | | | | | | |
|---|---|---|---|---|---|---|---|---|---|---|
| (1) 92-039 & (1) 92-038 for 36" cut | **92-039** | 600900<br>600900X<br>600900Y | **13-3/4** | 5/8 | | | 2.50/.203 | 0 | 3/4 | |
| | | | Discontinued | | | | | | | |
| (3) for 44" cut, FasTrak, Super Mini Z, Mini Z | **90-205** | 784256<br>784256X | **15-11/16** | 5/8 | | | 2.50/.203 | 0 | 13/16<br>Xtended | |
| | | | Discontinued | | | | | | | |
| Gator G3™ | **96-302** | 785728<br>785728X<br>787739<br>794693<br>794693X<br>796300<br>796300X | 15-11/16 | 5/8 | | | 2.50/.203 | 0 | 1<br>Xtended | G3 |
| | | | Discontinued | | | | | | | |
| (3) for 48" cut, FasTrak, Sport, X-One | **92-207** | 601014<br>601014X<br>601123<br>601123X<br>601123Y<br>796631<br>796631X<br>796631Y | **16-1/2** | 5/8 | | | 2.50/.203 | 0 | 13/16<br>Xtended | |
| (3) for 48" cut, high-lift, FasTrak, Sport, X-One | **92-737** | 795757<br>795757X<br>795757Y | 16-1/2 | 5/8 | | | 2.50/.203 | 0 | 1-1/16<br>Xtended | |
| | | | Discontinued | | | | | | | |
| (3) for 48" cut, mulching, FasTrak, Sport, X-One | **92-743** | 796623<br>796623X<br>796623Y | 16-1/2 | 5/8 | | | 2.50/.203 | 0 | 1<br>Xtended | |
| | | | Discontinued | | | | | | | |
| (3) for 48" cut,FasTrak, Sport, X-One | **91-620** | | 16-1/2 | 5/8 | | | 2.50/.203 | 0 | 1<br>Xtended | |
| | | | Discontinued | | | | | | | |
| (3) for 48" cut, FasTrak, Sport, X-One | **91-621** | | 16-1/2 | 5/8 | | | 3.00/.203 | 0 | 1-1/2 | |
| | | | Discontinued | | | | | | | |
| (3) for 48" cut, FasTrak, Sport, X-One | **92-145** | | 16-1/2 | 5/8 | | | 2.50/.203 | 0 | 1 | |
| | | | Discontinued | | | | | | | |

GROUP CONTINUES

## Hustler

| | OREGON | OEM No. | Length | Center | Outer | C to C | W / T | Off | Lift | Prod. Code |
|---|---|---|---|---|---|---|---|---|---|---|
| (3) for 48" cut, FasTrak, Sport, X-One | **99-126** | | 16-1/2 | 5/8 | | | 2.50/.203 | 0 | 1-1/16 | |
| | | | **Discontinued** | | | | | | | |
| Gator® G3™ | **96-308** | 796649Y | 16-1/2 | 5/8 | | | 2.50/.203 | 0 | 1 | G3 |
| | | | **Discontinued** | | | | | | | |
| Gator G5™ | **596-308** | | 16-1/2 | 5/8 | | | 3.00/.203 | 0 | 1 | G5 |
| | | | **Discontinued** | | | | High-Lift Xtended Fusion® | | | |
| Gator G6™ | **396-735** | | 16-1/2 | 5/8 | | | 3.00/.250 | 0 | 1 | G6 |
| | | | **Discontinued** | | | | Heavy-Duty High-Lift Xtended Fusion® | | | |
| (3) for 52" cut | **91-178** | 30866<br>396-735 | **17-7/8** | 1/2 | | | 2.75/.187 | 9/16 | 3/4 | |
| | | | **Discontinued** | | | | Xtended | | | |
| (3) for 52" cut, high-lift, FasTrak, Mini Z, X-ONE i | **92-044** | 787721<br>787721X<br>787721Y<br>795526<br>795526X<br>795526Y | **17-7/8** | 5/8 | | | 2.50/.203 | 0 | 1-1/16 | |
| | | | **Discontinued** | | | | Xtended | | | |
| (3) for 52" cut, Raptor | **92-211** | 603995<br>603995X | 17-7/8 | 5/8 | | | 2.25/.187 | 1/16 | 15/16 | |
| (3) for 52" cut, mulching, Raptor | **92-212** | 794198<br>794198X<br>794198Y | 17-7/8 | 5/8 | | | 2.50/.203 | 0 | 1 | |
| | | | **Discontinued** | | | | Xtended | | | |
| (3) for 52" cut, low-lift, FasTrak, Mini Z, X-ONE i | **90-206** | 783753<br>783753X<br>783753Y | 17-7/8 | 5/8 | | | 2.50/.203 | 0 | 13/16 | |
| | | | **Discontinued** | | | | | | | |
| Gator® G3™ | **96-318** | 603848<br>603848X<br>603848Y<br>782532<br>785436<br>785436X<br>785436Y | 17-7/8 | 5/8 | | | 2.50/.203 | 0 | 3/4 | G3 |
| | | | **Discontinued** | | | | | | | |
| Gator G5™ | **596-704** | | 17-7/8 | 5/8 | | | 3.00/.203 | 0 | 1 | G5 |
| | | | **Discontinued** | | | | High-Lift Xtended Fusion® | | | |
| Gator G6™ | **396-704** | | 17-7/8 | 5/8 | | | 3.00/.250 | 0 | 1 | G6 |
| | | | **Discontinued** | | | | Heavy-Duty High-Lift Xtended Fusion® | | | |

GROUP CONTINUES

# Blades - OEM Replacements

## Hustler

| | OREGON | OEM No. | Length | Center | Outer | C to C | W / T | Off | Lift | Prod. Code |
|---|---|---|---|---|---|---|---|---|---|---|
| (3) for 52" cut, Super Z | **90-207** | 781898 | **17-7/8** Discontinued | 5/8 | | | 3.00/.250 | 5/8 | 1 | |
| (3) for 54" cut, standard lift, XR7 decks | **92-208** | 601012<br>601012X<br>601013<br>601013X<br>601124<br>601124X<br>601124Y | **18-1/2** | 5/8 | | | 2.50/.203 | 0 | 13/16 | |
| | | | | | | | Xtended | | | |
| (3) for 54" cut, high-lift, XR7 decks | **92-042** | 797696<br>797696X<br>797696Y | 18-1/2 Discontinued | 5/8 | | | 2.50/.203 | 0 | 1-1/16 | |
| (3) for 54" cut, mulching, XR7 decks | **92-738** | 797704<br>797704X<br>797704Y | 18-1/2 Discontinued | 5/8 | | | 2.50/.203 | 0 | 1 | |
| | | | | | | | Xtended | | | |
| Gator G5 | **596-808** | 602416<br>602416X<br>602416Y<br>797712<br>797712X<br>797712Y | 18-1/2 Discontinued | 5/8 | | | 3.00/.203 | 0 | 1 | |
| | | | | | | | High-Lift Xtended Fusion® | | | G5 |
| Gator G6 | **392-208** | | 18-1/2 Discontinued | 5/8 | | | 3.00/.250 | 0 | 1 | |
| | | | | | | | Heavy-Duty High-Lift Xtended Fusion® | | | G6 |
| (2) for 42" cut, Zeon | **91-188** | | **20-1/2** Discontinued | 1/2 | | | 2.50/.203 | 0 | 1 | |
| | | | | | | | Xtended | | | |
| (2) for 42" cut, mulching, Zeon | **91-217** | 602698<br>602698X | 20-1/2 Discontinued | 1/2 | | | 2.50/.203 | 0 | 1 | |
| Gator® G3™ | **96-801** | 602284<br>602284X<br>602288 | 20-1/2 Discontinued | 1/2 | | | 2.50/.250 | 0 | 1 | G3 |
| Gator G6™ | **396-739** | | 20-1/2 Discontinued | 1/2 | | | 3.00/.250 | 0 | 1 | |
| | | | | | | | Heavy-Duty High-Lift Xtended Fusion® | | | G6 |
| (3) for 60" cut, high-lift, Super Z, Z, XR-7 deck | **92-037** | 794685<br>794685X | **20-1/2** Discontinued | 5/8 | | | 2.50/.203 | 0 | 1-1/16 | |
| | | | | | | | Xtended | | | |

GROUP CONTINUES

B

## Hustler

| | OREGON | OEM No. | Length | Center | Outer | C to C | W / T | Off | Lift | Prod. Code |
|---|---|---|---|---|---|---|---|---|---|---|
| (3) for 60" cut, low-lift, Super Z, Z, XR-7 deck | **92-038** | 600901<br>793794<br>793794X<br>793794Y | 20-1/2 | 5/8 | | | 2.50/.203 | 0 | 13/16 | |
| | | | | | | | Xtended | | | |
| (3) for 60" cut, mulching, Super Z, Z, XR-7 deck | **91-311** | 794214<br>794214X | 20-1/2 | 5/8 | | | 2.50/.203 | 0 | 1 | |
| | | | Discontinued | | | | Xtended | | | |
| (2) for 42" cut | **92-213** | 603992<br>603992X | 20-1/2 | 5/8 | | | 2.25/.187 | 1/16 | 15/16 | |
| (3) for 60" cut, Super Z, Z, XR-7 deck | **90-109** | | 20-1/2 | 5/8 | | | 3.00/.250 | 0 | 1-3/16 | |
| | | | Discontinued | | | | Xtended | | | |
| (3) for 60" cut, Super Z, Z, XR-7 deck | **91-253** | | 20-1/2 | 5/8 | | | 2.50/.250 | 0 | 1-1/8 | |
| | | | Discontinued | | | | | | | |
| (3) for 60" cut, Super Z, Z, XR-7 deck | **91-264** | | 20-1/2 | 5/8 | | | 2.50/.203 | 0 | 1 | |
| | | | Discontinued | | | | Xtended | | | |
| (3) for 60" cut, Super Z, Z, XR-7 deck | **91-378** | | 20-1/2 | 5/8 | | | 2.50/.203 | 0 | 5/8 | |
| | | | Discontinued | | | | | | | |
| (3) for 60" cut, Super Z, Z, XR-7 deck | **91-503** | | 20-1/2 | 5/8 | | | 2.50/.203 | 0 | 1-3/16 | |
| | | | Discontinued | | | | Xtended | | | |
| (3) for 60" cut, Super Z, Z, XR-7 deck | **91-506** | | 20-1/2 | 5/8 | | | 2.50/.250 | 0 | 1-3/16 | |
| | | | Discontinued | | | | Xtended | | | |
| (3) for 60" cut, Super Z, Z, XR-7 deck | **91-509** | | 20-1/2 | 5/8 | | | 2.50/.250 | 0 | 1-1/8 | |
| | | | Discontinued | | | | Xtended | | | |
| (3) for 60" cut, Super Z, Z, XR-7 deck | **94-055** | | 20-1/2 | 5/8 | | | 2.50/.250 | 0 | 1 | |
| | | | Discontinued | | | | | | | |
| Gator® G3™ | **96-319** | 602771<br>602771X<br>794230<br>794230X<br>794230Y | 20-1/2 | 5/8 | | | 2.50/.203 | 0 | 3/4 | G3 |
| | | | Discontinued | | | | | | | |
| Gator G5™ | **596-319** | | 20-1/2 | 5/8 | | | 3.00/.203 | 0 | 1 | |
| | | | Discontinued | | | | High-Lift Xtended Fusion® | | | G5 |

GROUP CONTINUES

B

# Blades - OEM Replacements

## Hustler

GROUP CONTINUES

| | OREGON | OEM No. | Length | Center | Outer | C to C | W / T | Off | Lift | Prod. Code |
|---|---|---|---|---|---|---|---|---|---|---|
| Gator G6™ | 396-740 | | 20-1/2 | 5/8 | | | 3.00/.250 | 0 | 1 | Heavy-Duty High-Lift Xtended Fusion® G6 |
| | | | Discontinued | | | | | | | |
| 60" cut, Super Z | 90-208 | 782516<br>782516X | 20-15/16 | 5/8 | | | 3.00/.250 | 5/8 | 1 | |
| | | | Discontinued | | | | | | | |
| Gator G6 | 396-703 | | 20-15/16 | 5/8 | | | 3.00/.250 | 5/8 | 1 | Heavy-Duty High-Lift Xtended Fusion® G6 |
| | | | Discontinued | | | | | | | |
| (3) for 61" cut, X1, Super Z, Z | 91-308 | 602439<br>602439X<br>602439Y<br>795252<br>795252X<br>795252Y | 21 | 5/8 | | | 2.50/.203 | 0 | 1 | |
| | | | Discontinued | | | | | | | |
| (3) for 61" cut, mulching | 91-596 | 793380<br>793380X<br>793380Y | 21 | 5/8 | | | 2.50/.203 | 0 | 1 | |
| | | | Discontinued | | | | | | | |
| Gator G3 | 96-347 | 794859<br>794859X<br>794859Y | 21 | 5/8 | | | 2.50/.203 | 0 | 3/4 | G3 |
| | | | Discontinued | | | | | | | |
| Gator® G5™ | 596-347 | | 21 | 5/8 | | | 3.00/.203 | 0 | 1 | High-Lift Xtended Fusion® G5 |
| | | | Discontinued | | | | | | | |
| Gator G6™ | 396-727 | | 21 | 5/8 | | | 3.00/.250 | 0 | 1 | Heavy-Duty High-Lift Xtended Fusion® G6 |
| | | | Discontinued | | | | | | | |
| (3) for Z, Super Z, 66, side discharge deck | 92-045 | 798496<br>798496X | 22-1/2 | 5/8 | | | 3.00/.203 | 0 | 1-1/16 | Xtended |
| | | | Discontinued | | | | | | | |
| Gator G5 | 596-601 | 602414<br>602415<br>602864<br>798504<br>798512<br>602414Y<br>602415Y<br>602864X | 22-1/2 | 5/8 | | | 3.00/.203 | 0 | 1 | High-Lift Xtended Fusion® G5 |
| | | | Discontinued | | | | | | | |
| | | | 798504X<br>798504Y<br>798512X<br>798512Y | | | | | | | |
| (3) for 72" cut | 92-739 | 795260<br>795260X<br>795260Y | 23-7/8 | 5/8 | | | 3.00/.203 | 0 | 1-1/16 | |
| | | | Discontinued | | | | | | | |

GROUP CONTINUES

B

## Hustler

| | OREGON | OEM No. | Length | Center | Outer | C to C | W / T | Off | Lift | Prod. Code |
|---|---|---|---|---|---|---|---|---|---|---|
| Gator G3 | **96-216** | 793398<br>793398X<br>793398Y<br>794867<br>794867X<br>794867Y<br>796839<br>796839X<br>796839Y | 23-7/8 | 5/8 | | | 2.50/.203 | 0 | 3/4 | G3 |
| | | | **Discontinued** | | | | | | | |
| Gator G3 (1) 96-215 & (2) 96-216 for 72" cut, rear discharge | **96-215** | 601929<br>601929X<br>604164<br>604164X<br>796508<br>796508X | **23-7/8** | 5/8 | | | 2.50/.203 | 0 | 3/4 | G3 |
| | | | **Discontinued** | | | | | | | |
| (3) for 72" cut | **91-627** | | **24-1/2** | 5/8 | | | 2.50/.203 | 0 | 1 | |
| | | | **Discontinued** | | | | Xtended | | | |
| (3) for 72" cut, high-lift | **92-035** | | 24-1/2 | 5/8 | | | 3.00/.250 | 0 | 1-3/16 | |
| | | | **Discontinued** | | | | | | | |
| Gator® G3™ | **96-341** | 602857<br>602857X<br>798710<br>798710X<br>798728<br>798728X | 24-1/2 | 5/8 | | | 2.50/.203 | 0 | 3/4 | G3 |
| | | | **Discontinued** | | | | | | | |
| Gator G5™ | **596-341** | | 24-1/2 | 5/8 | | | 3.00/.203 | 0 | 1 | |
| | | | **Discontinued** | | | | High-Lift Xtended Fusion® | | | G5 |
| Gator G6™ | **396-764** | | 24-1/2 | 5/8 | | | 3.00/.250 | 0 | 1 | |
| | | | **Discontinued** | | | | Heavy-Duty High-Lift Xtended Fusion® | | | G6 |

## Ingersoll

| | | | | | | | | | | |
|---|---|---|---|---|---|---|---|---|---|---|
| (3) for 48" cut | **91-117** | C31572 | **17** | 7/8 h<br>1-1/4 w | | | 2.50/.187 | 7/16 | 1 | |

B

# Blades - OEM Replacements

## Jacobsen

| | OREGON | OEM No. | Length | Center | Outer | C to C | W / T | Off | Lift | Prod. Code |
|---|---|---|---|---|---|---|---|---|---|---|
| (3) for 42" cut | **91-342** | 330721<br>500904 | **14-7/8** | 7/16 | 1/2 | 1-5/8 | 2.00/.149 | 1/4 | 13/16 | |
| (3) for 48" cut, high-lift, Crew Chief and Crew King | **91-180** | 390666 | **16-1/4** | 5/8 | | | 2.50/.187 | 0 | 1 | |
| (3) for 48" cut | **91-183** | | 16-1/4 | 5/8 | | | 2.50/.250 | 0 | 1 | |
| (3) for 48" cut | **91-313** | | 16-1/4 | 5/8 | | front | 2.50/.203 | 0 | 1 | |
| (3) for 48" cut | **99-127** | | 16-1/4 | 5/8 | | | 2.50/.203 | 0 | 1-1/16 | |
| (3) for 48" cut, mulching | **91-368** | | 16-1/4 | 5/8 | | | 2.50/.203 | 0 | 1 | Xtended |
| Gator® G3™ | **96-310** | | 16-1/4 | 5/8 | | | 2.50/.203 | 0 | 3/4 | G3 |
| Gator G5™ | **596-310** | | 16-1/4 | 5/8 | | | 3.00/.203 | 0 | 1 | High-Lift Xtended Fusion® G5 |
| Gator G6® | **396-716** | | 16-1/4 | 5/8 | | | 3.00/.250 | 0 | 1 | Heavy-Duty High-Lift Xtended Fusion® G6 |
| (2) for 32" cut, (3) for 48" cut | **93-009** | 112111-01 | **16-1/4** | 5/8 | | | 2.50/.203 | 1/2 | 1-1/8 | |
| Gator G5 | **593-600** | | 16-1/4 | 5/8 | | | 3.00/.203 | 1/2 | 1 | High-Lift Xtended Fusion® G5 |

B

## Jacobsen

| | OREGON | OEM No. | Length | Center | Outer | C to C | W / T | Off | Lift | Prod. Code |
|---|---|---|---|---|---|---|---|---|---|---|
| (3) for 50" cut | **91-502** | 302227-50X | **17** | 5/8 | | | 2.50/.203 | 0 | 1-3/16 | |
| | | | | | | | Xtended | | | |
| (3) for 50" cut, high-lift | **91-505** | | 17 | 5/8 | | | 2.50/.250 | 0 | 1-1/8 | |
| | | | | | | | Xtended | | | |
| (3) for 50" cut | **91-508** | | 17 | 5/8 | | | 2.50/.250 | 0 | 1-3/16 | |
| | | | | | | | Xtended | | | |
| (3) for 50" cut | **91-525** | | 17 | 5/8 | | | 2.50/.250 | 5/16 | 1-3/16 | |
| Gator® G3™ | **96-323** | | 17 | 5/8 | | | 2.50/.203 | 0 | 1 | G3 |
| Gator G5™ | **596-323** | | 17 | 5/8 | | | 3.00/.203 | 0 | 1 | |
| | | | | | | | High-Lift Xtended Fusion® | | | G5 |
| Gator G6® | **396-723** | | 17 | 5/8 | | | 3.00/.250 | 0 | 1 | |
| | | | | | | | Heavy-Duty High-Lift Xtended Fusion® | | | G6 |
| (2) for 36" cut, (3) for 52" cut | **91-181** | 363055 | **18** | 5/8 | | | 2.50/.187 | 0 | 1 | |
| | | | | | | | Xtended | | | |
| (2) for 36" cut, (3) for 52" cut, heavy-duty | **91-184** | | 18 | 5/8 | | | 2.50/.250 | 0 | 1 | |
| | | | | | | | Xtended | | | |
| (2) for 36" cut, (3) for 52" cut, high-lift | **91-623** | | 18 | 5/8 | | | 3.00/.203 | 0 | 1-1/2 | |
| | | | | | | | Xtended | | | |
| (2) for 36" cut, (3) for 52" cut, low-lift | **91-235** | | 18 | 5/8 | | | 2.50/.250 | 0 | 7/8 | |
| | | | | | | | Xtended | | | |
| (2) for 36" cut, (3) for 52" cut, mulching | **91-218** | | 18 | 5/8 | | | 2.50/.164 | 0 | 1 | |
| | | | | | | | Xtended | | | |
| (2) for 36" cut, (3) for 52" cut, mulching | **91-335** | | 18 | 5/8 | | | 2.50/.203 | 0 | 1 | |
| | | | | | | | Xtended | | | |
| (2) for 36" cut, (3) for 52" cut | **91-256** | | 18 | 5/8 | | | 2.50/.203 | 0 | 1 | |
| | | | | | | | Xtended | | | |

GROUP CONTINUES

B

# Blades - OEM Replacements

## Jacobsen

| | OREGON | OEM No. | Length | Center | Outer | C to C | W / T | Off | Lift | Prod. Code |
|---|---|---|---|---|---|---|---|---|---|---|
| | | | GROUP CONTINUES | | | | | | | |
| (2) for 36" cut, (3) for 52" cut | **91-312** | | 18 | 5/8 | | | 2.50/.203 | 0 | 1 | Xtended |
| (2) for 36" cut, (3) for 52" cut | **91-622** | | 18 | 5/8 | | | 2.50/.203 | 0 | 1 | Xtended |
| (2) for 36" cut, (3) for 52" cut | **91-637** | | 18 | 5/8 | | | 2.50/.203 | 0 | 1 | |
| (2) for 36" cut, (3) for 52" cut | **94-053** | | 18 | 5/8 | | | 2.50/.250 | 0 | 1 | |
| Gator® G3™ | **96-344** | 390665 | 18 | 5/8 | | | 2.50/.203 | 0 | 3/4 | G3 |
| Gator G5™ | **596-344** | | 18 | 5/8 | | | 3.00/.203 | 0 | 1 | High-Lift Xtended Fusion® G5 |
| Gator G6® | **396-726** | | 18 | 5/8 | | | 3.00/.250 | 0 | 1 | Heavy-Duty High-Lift Xtended Fusion® G6 |
| (2) for 36" cut, (3) for 52" cut | **93-010** | 112111-02 | **18** | 5/8 | | | 2.50/.203 | 1/2 | 1-1/8 | Xtended |
| (2) for 36" cut, (3) for 52" cut | **91-039** | | 18 | 5/8 | | | 2.50/.203 | 1/2 | 1 | |
| Gator G3 | **93-601** | | 18 | 5/8 | | | 2.50/.203 | 1/2 | 3/4 | G3 |
| Gator G5 | **593-601** | | 18 | 5/8 | | | 3.00/.203 | 1/2 | 1 | High-Lift Xtended Fusion® G5 |
| (3) for 60" cut | **94-072** | | **20-1/2** | 1/2 | | | 2.50/.250 | 0 | 3/4 | |
| (3) for 60" cut | **91-188** | | 20-1/2 | 1/2 | | | 2.50/.203 | 0 | 1 | Xtended |
| | | | GROUP CONTINUES | | | | | | | |

## Jacobsen

| | OREGON | OEM No. | Length | Center | Outer | C to C | W / T | Off | Lift | Prod. Code |
|---|---|---|---|---|---|---|---|---|---|---|
| | | | GROUP CONTINUES | | | | | | | |
| (3) for 60" cut, mulching | **91-217** | | 20-1/2 | 1/2 | | | 2.50/.203 | 0 | 1 | |
| Gator® G3™ | **96-801** | 79050 | 20-1/2 | 1/2 | | | 2.50/.250 | 0 | 1 | G3 |
| Gator G6® | **396-739** | | 20-1/2 | 1/2 | | | 3.00/.250 | 0 | 1 | Heavy-Duty High-Lift Xtended Fusion® G6 |
| (3) for 60" cut | **91-503** | 30227-60X | **20-1/2** | 5/8 | | | 2.50/.203 | 0 | 1-3/16 | Xtended |
| (3) for 60" cut, high-lift | **91-506** | 30227-60X | 20-1/2 | 5/8 | | | 2.50/.250 | 0 | 1-3/16 | Xtended |
| (3) for 60" cut, low-lift | **91-378** | 30227-60X | 20-1/2 | 5/8 | | | 2.50/.203 | 0 | 5/8 | |
| (3) for 60" cut, mulching | **91-311** | 30227-60X | 20-1/2 | 5/8 | | | 2.50/.203 | 0 | 1 | Xtended |
| (3) for 60" cut | **91-509** | 30227-60X | 20-1/2 | 5/8 | | | 2.50/.250 | 0 | 1-1/8 | Xtended |
| (3) for 60" cut | **91-527** | 30227-60X | 20-1/2 | 5/8 | | | 2.50/.250 | 5/16 | 1-3/16 | |
| (3) for 60" cut | **90-109** | 30227-60X | 20-1/2 | 5/8 | | | 3.00/.250 | 0 | 1-3/16 | Xtended |
| (3) for 60" cut | **91-253** | 30227-60X | 20-1/2 | 5/8 | | | 2.50/.250 | 0 | 1-1/8 | |
| (3) for 60" cut | **91-264** | 30227-60X | 20-1/2 | 5/8 | | | 2.50/.203 | 0 | 1 | Xtended |
| (3) for 60" cut | **92-037** | 30227-60X | 20-1/2 | 5/8 | | | 2.50/.203 | 0 | 1-1/16 | Xtended |
| (3) for 60" cut | **92-038** | 30227-60X | 20-1/2 | 5/8 | | | 2.50/.203 | 0 | 13/16 | Xtended |
| | | | GROUP CONTINUES | | | | | | | |

B

# Blades - OEM Replacements

## Jacobsen

| | OREGON | OEM No. | Length | Center | Outer | C to C | W / T | Off | Lift | Prod. Code |
|---|---|---|---|---|---|---|---|---|---|---|
| | | | GROUP CONTINUES | | | | | | | |
| (3) for 60" cut | **94-055** | 30227-60X | 20-1/2 | 5/8 | | | 2.50/.250 | 0 | 1 | |
| Gator® G3™ | **96-319** | 30227-60X | 20-1/2 | 5/8 | | | 2.50/.203 | 0 | 3/4 | G3 |
| Gator G5™ | **596-319** | 30227-60X | 20-1/2 | 5/8 | | | 3.00/.203 | 0 | 1 | High-Lift Xtended Fusion® G5 |
| Gator G6® | **396-740** | 30227-60X | 20-1/2 | 5/8 | | | 3.00/.250 | 0 | 1 | Heavy-Duty High-Lift Xtended Fusion® G6 |
| (3) for 60" cut, Turf Cat, (11) for HR 9016 Turbo | **92-013** | 3007759 | **20-13/16** | 1/2 | | | 2.50/.250 | 0 | 1 | |
| Gator G6 | **392-013** | 2810030<br>4119024 | 20-13/16 | 1/2 | | | 3.00/.250 | 0 | 1 | Heavy-Duty High-Lift Xtended Fusion® G6 |
| (3) for 60" cut, 940000-970000 series, Frontline 951, HR6010, LHAM002, LMAB(703,797), LMAC(151-157), Ransomes, RD deck, Turfcat 628D, ZT220D | **93-013** | 112243-03 | **21** | 5/8 | | | 2.50/.250 | 1/2 | 5/8 | Xtended |
| (3) for 60" cut, high-lift, 2260ES, JZT2230, JZT2250, Procut Z, ZT231 | **93-011** | 112111-03 | 21 | 5/8 | | | 2.50/.250 | 1/2 | 1-1/8 | Xtended |
| (3) for 61" cut, high-lift | **91-135** | | 21 | 5/8 | | | 2.50/.203 | 1/2 | 1 | |
| Gator® G3™ | **96-702** | | 21 | 5/8 | | | 2.50/.203 | 1/2 | 1 | G3 |
| Gator G5™ | **596-702** | | 21 | 5/8 | | | 3.00/.203 | 1/2 | 1 | High-Lift Xtended Fusion® G5 |
| Gator G6® | **396-702** | | 21 | 5/8 | | | 3.00/.250 | 1/2 | 1 | Heavy-Duty High-Lift Xtended Fusion® G6 |

B

## Jacobsen

| | OREGON | OEM No. | Length | Center | Outer | C to C | W / T | Off | Lift | Prod. Code |
|---|---|---|---|---|---|---|---|---|---|---|
| (3) for 63" cut, high-lift, Turfcat | **94-076** | 4176600 | **22** | 1/2 | | | 2.50/.250 | 1/2 | 1 | |
| (3) for 63" cut, Turfcat | **94-075** | | 22 | 1/2 | | | 2.50/.250 | 1/2 | 15/16 | |
| (3) for 63" cut, Turfcat | **94-077** | | 22 | 1/2 | | | 2.50/.187 | 7/16 | 1 | |
| Gator G6 | **394-075** | | 22 | 1/2 | | | 3.00/.250 | 1/2 | 1 | Heavy-Duty High-Lift Xtended Fusion® G6 |
| (5) for 90" cut, (7) for 124" cut, high-lift, AR-5, AR-522, AR-722T | **91-591** | 4137186 | **22-5/16** | 1/2 | | | 2.50/.250 | 1/8 | 1-1/8 | |
| (5) for 90" cut, (7) for 124" cut, low-lift, AR-5, AR-522, AR-722T | **92-014** | 4124087 | 22-5/16 | 1/2 | | | 2.50/.250 | 1/2 | 5/8 | |
| Gator G6 | **391-591** | 4163105<br>4163106 | 22-5/16 | 1/2 | | | 3.00/.250 | 1/2 | 1 | Heavy-Duty High-Lift Xtended Fusion® G6 |
| (3) 91-364 & (4) 91-363 per deck, RH cut, fits HR511 model | **91-364** | JT391040 | **23** | 1/2 | 7/16 | 2-7/8 | 2.50/.250 | 0 | 11/16 | |
| Gator G3 | **96-795** | 4186582 | 23 | 1/2 | 3/8 | 2-7/8 | 2.50/.250 | 0 | 1 | G3 |
| (4) 91-363 & (3) 91-364 per deck, LH cut, fits HR511 | **91-363** | JT391039 | **23** | 1/2 | 7/16 | 2-7/8 | 2.50/.250 | 0 | 11/16 | |
| Gator® G3™ | **96-696** | | 23 | 1/2 | 3/8 | 2-7/8 | 2.50/.250 | 0 | 1 | G3 |

B

# Blades - OEM Replacements

## Jacobsen

| | OREGON | OEM No. | Length | Center | Outer | C to C | W / T | Off | Lift | Prod. Code |
|---|---|---|---|---|---|---|---|---|---|---|
| (3) for 72" cut | **91-627** | | **24-1/2** | 5/8 | | | 2.50/.203 | 0 | 1 | Xtended |
| (3) for 72" cut, high-lift | **92-035** | | 24-1/2 | 5/8 | | | 3.00/.250 | 0 | 1-3/16 | |
| Gator G3 | **96-341** | 3970261 | 24-1/2 | 5/8 | | | 2.50/.203 | 0 | 3/4 | G3 |
| Gator G5™ | **596-341** | | 24-1/2 | 5/8 | | | 3.00/.203 | 0 | 1 | High-Lift Xtended Fusion® G5 |
| Gator G6® | **396-764** | | 24-1/2 | 5/8 | | | 3.00/.250 | 0 | 1 | Heavy-Duty High-Lift Xtended Fusion® G6 |
| (3) for 72" cut, Turfcat | **91-352** | 390515 | **24-15/16** | 7/16 | 7/16 | 2-7/8 | 2.50/.250 | 0 | 13/16 | |
| (3) for 72" cut | **93-025** | 112111-04 | **24-15/16** | 5/8 | | | 2.50/.250 | 1/2 | 1-1/4 | |

## John Deere

| | OREGON | OEM No. | Length | Center | Outer | C to C | W / T | Off | Lift | Prod. Code |
|---|---|---|---|---|---|---|---|---|---|---|
| (3) for 44" cut | **91-589** | M121589 | **15-13/16** | 3/4 | | | 2.50/.164 | 5/8 | 3/4 | |
| Gator G5 | **591-594** | AM30698<br>M119798<br>M119799<br>M41237 | 15-13/16 | 13/16 | | | 3.00/.164 | 5/8 | 1 | High-Lift Xtended Fusion® G5 |
| (3) for 46" cut, Model 46-47-48 deck | **91-389** | AM31100<br>M41967 | **16** | 11/16 | | | 2.00/.203 | 0 | 13/16 | |
| (3) for 46" cut, lawn tractor, Used on Scotts mower | **91-448** | M127466 | 16 | 11/16 | | | 2.50/.203 | 0 | 15/16 | |
| Gator® G3™ | **96-394** | | 16 | 11/16 | | | 2.50/.203 | 0 | 1 | G3 |
| Gator G6® | **396-725** | | 16 | 11/16 | | | 3.00/.250 | 0 | 1 | Heavy-Duty High-Lift Xtended Fusion® G6 |

B

## John Deere

| | OREGON | OEM No. | Length | Center | Outer | C to C | W / T | Off | Lift | Prod. Code |
|---|---|---|---|---|---|---|---|---|---|---|
| (3) for 48" cut | **91-620** | | **16-1/2** | 5/8 | | | 2.50/.203 | 0 | 1 | |
| | | | | | | | Xtended | | | |
| (3) for 48" cut, high-lift | **91-621** | | 16-1/2 | 5/8 | | | 3.00/.203 | 0 | 1-1/2 | |
| (3) for 48" cut, low-lift | **92-207** | | 16-1/2 | 5/8 | | | 2.50/.203 | 0 | 13/16 | |
| | | | | | | | Xtended | | | |
| (3) for 48" cut, mulching | **92-743** | | 16-1/2 | 5/8 | | | 2.50/.203 | 0 | 1 | |
| | | | | | | | Xtended | | | |
| (3) for 48" cut | **92-145** | | 16-1/2 | 5/8 | | | 2.50/.203 | 0 | 1 | |
| (3) for 48" cut | **92-737** | | 16-1/2 | 5/8 | | | 2.50/.203 | 0 | 1-1/16 | |
| | | | | | | | Xtended | | | |
| (3) for 48" cut | **99-126** | | 16-1/2 | 5/8 | | | 2.50/.203 | 0 | 1-1/16 | |
| Gator G3<br>(3) for 48" cut, commercial walk-behind V style deck | **96-308** | AM104489<br>M73509<br>PT11136 | 16-1/2 | 5/8 | | | 2.50/.203 | 0 | 1 | G3 |
| Gator G5™ | **596-308** | | 16-1/2 | 5/8 | | | 3.00/.203 | 0 | 1 | |
| | | | | | | | High-Lift Xtended Fusion® | | | G5 |
| Gator G6 | **396-735** | | 16-1/2 | 5/8 | | | 3.00/.250 | 0 | 1 | |
| | | | | | | | Heavy-Duty High-Lift Xtended Fusion® | | | G6 |
| (3) for 48" cut, Yard Tractor, high-lift for bagging | **91-447** | M135589<br>M76466 | **16-9/16** | 13/16 | | | 2.50/.203 | 7/16 | 1-1/16 | |
| Gator® G3™ | **96-618** | | 16-9/16 | 13/16 | | | 2.50/.203 | 7/16 | 1 | G3 |
| (3) for 48" cut, new style | **91-381** | M114581<br>M115328<br>M115495 | **16-5/8** | 13/16 | | | 2.50/.203 | 3/8 | 1-3/16 | |
| (3) for 48" cut | **91-401** | | 16-5/8 | 13/16 | | | 2.50/.203 | 5/16 | 13/16 | |

GROUP CONTINUES

# Blades - OEM Replacements

## John Deere

| | OREGON | OEM No. | Length | Center | Outer | C to C | W / T | Off | Lift | Prod. Code |
|---|---|---|---|---|---|---|---|---|---|---|
| | | | GROUP CONTINUES | | | | | | | |
| | **91-383** | M113517 | 16-5/8 | 13/16 | | | 2.50/.203 | 1/4 | 3/4 | |
| (3) for 48" cut, Tri-cycler | | | | | | | | | | |
| | **96-332** | M111522 | 16-5/8 | 13/16 | | | 2.50/.203 | 3/8 | 1 | G3 |
| Gator G3<br>Do not use with mulching kit installed. | | | | | | | | | | |
| | **596-332** | | 16-5/8 | 13/16 | | | 3.00/.203 | 3/8 | 1 | G5 |
| | | | | | | | | | | High-Lift Xtended Fusion® |
| Gator G5™ — Hi-Lift<br>Do not use with mulching kit installed. | | | | | | | | | | |
| | **396-732** | | 16-5/8 | 13/16 | | | 3.00/.250 | 3/8 | 1 | G6 |
| | | | | | | | | | | Heavy-Duty High-Lift Xtended Fusion® |
| Gator G6®<br>Do not use with mulching kit installed. | | | | | | | | | | |
| | **90-348** | M127500<br>M145476 | **16-15/16** | 13/16 | | | 2.50/.203 | 9/16 | 1-1/8 | |
| (3) for 48" cut, 48C convertible deck X324, Z445 | | | | | | | | | | |
| | **96-354** | M127673 | 16-15/16 | 13/16 | | | 2.50/.203 | 9/16 | 3/4 | G3 |
| Gator G3 | | | | | | | | | | |
| | **596-354** | | 16-15/16 | 13/16 | | | 3.00/.203 | 5/8 | 1 | G5 |
| | | | | | | | | | | High-Lift Xtended Fusion® |
| Gator® G5™ | | | | | | | | | | |
| | **396-354** | | 16-15/16 | 13/16 | | | 3.00/.250 | 1/2 | 1 | G6 |
| | | | | | | | | | | Heavy-Duty High-Lift Xtended Fusion® |
| Gator G6® | | | | | | | | | | |
| | **191-108** | GX20250<br>GY20568 | **17** | 11/16 | 3/8 | 3-11/16 | 2.51/.164 | 1/4 | 1 | 100 |
| | | | | | | | | | | Xtended |
| (3) for 48" cut, L120, L130, Sabre 1642HS, 1742HS, 1948GV, 1948HV, 2148HV | | | | | | | | | | |
| | **91-496** | GX20434 | 17 | 11/16 | 3/8 | 3-11/16 | 2.50/.164 | 1/4 | 1-3/8 | |
| (3) for 48" cut, high-lift | | | | | | | | | | |
| | **92-675** | GX20819 | 17 | 11/16 | 3/8 | 3-11/16 | 2.50/.187 | 3/8 | 1-3/16 | G3 |
| Gator G3™ | | | | | | | | | | |

B

## John Deere

| | OREGON | OEM No. | Length | Center | Outer | C to C | W / T | Off | Lift | Prod. Code |
|---|---|---|---|---|---|---|---|---|---|---|
| (3) for 48" cut, 100 Series, D140/ D160, X140, X165, Z245 | **92-104** | GX21784<br>GY20852 | **17** | 7 pt.<br>Star | | | 2.75/.164 | 3/16 | 1-3/16 | |
| (3) for 48" cut, high-lift, 100 Series, D140/D160, X140, X165, Z245 | **91-586** | GX21785 | 17 | 7 pt.<br>Star | | | 2.50/.187 | 3/16 | 1-3/8 | |
| (3) for 48" cut, mulching, 100 Series, D140/D160, X140, X165, Z245 | **92-105** | GX21786 | 17 | 7 pt.<br>Star | | | 2.75/.164 | 1/4 | 1-1/4 | |
| Gator G3 | **92-616** | AM137757<br>AM137758<br>AM141035<br>AM141036 | 17 | 7 pt.<br>Star | | | 2.50/.187 | 1/4 | 3/4 | G3 |
| Gator G5 | **592-616** | | 17 | 7 pt.<br>Star | | | 3.00/.164 | 5/16 | 1 | G5<br>High-Lift Xtended Fusion® |
| (3) for 48" cut, 7-Iron deck | **91-079** | M136194 | **17-1/16** | 7/8 | | | 2.50/.250 | 7/16 | 1-1/16 | |
| (3) for 48" cut, high-lift, 7-Iron deck | **92-144** | | 17-1/16 | 7/8 | | | 3.00/.250 | 7/16 | 1-5/16 | |
| Gator G6 | **396-770** | M136185<br>TCU14939<br>TCU18678<br>TCU21475<br>TCU30315 | 17-1/16 | 7/8 | | | 3.00/.250 | 1/2 | 1 | G6<br>Heavy-Duty High-Lift Xtended Fusion® |
| (3) for 50" cut, 285 model series | **91-393** | AM39966<br>M86209 | **17-3/16** | 11/16 | | | 2.50/.203 | 0 | 13/16 | |
| Gator® G6® | **396-738** | AM106634<br>M76461 | 17-3/16 | 11/16 | | | 3.00/.250 | 0 | 1 | G6<br>Heavy-Duty High-Lift Xtended Fusion® |
| (2) for 36" cut, (3) for 52" cut 636M and 652M QuikTrak | **91-622** | TCU37208 | **18** | 5/8 | | | 2.50/.203 | 0 | 1 | Xtended |
| (2) for 36" cut, (3) for 52" cut, High Lift 636M and 652M QuikTrak | **91-623** | | 18 | 5/8 | | | 3.00/.203 | 0 | 1-1/2 | Xtended |

GROUP CONTINUES

# Blades - OEM Replacements

## John Deere

GROUP CONTINUES

| | OREGON | OEM No. | Length | Center | Outer | C to C | W / T | Off | Lift | Prod. Code |
|---|---|---|---|---|---|---|---|---|---|---|
| (2) for 36" cut, (3) for 52" cut, low-lift 636M and 652M QuikTrak | **91-235** | | 18 | 5/8 | | | 2.50/.250 | 0 | 7/8 | Xtended |
| (2) for 36" cut, (3) for 52" cut, mulching 636M and 652M QuikTrak | **91-218** | | 18 | 5/8 | | | 2.50/.164 | 0 | 1 | Xtended |
| (2) for 36" cut, (3) for 52" cut, mulching 636M and 652M QuikTrak | **91-335** | PT8721<br>TCU35393 | 18 | 5/8 | | | 2.50/.203 | 0 | 1 | Xtended |
| (2) for 36" cut, (3) for 52" cut, heavy-duty 636M and 652M QuikTrak | **91-184** | | 18 | 5/8 | | | 2.50/.250 | 0 | 1 | Xtended |
| (2) for 36" cut, (3) for 52" cut 636M and 652M QuikTrak | **91-256** | AM104490 | 18 | 5/8 | | | 2.50/.203 | 0 | 1 | Xtended |
| (2) for 36" cut, (3) for 52" cut 636M and 652M QuikTrak | **91-181** | | 18 | 5/8 | | | 2.50/.187 | 0 | 1 | Xtended |
| (2) for 36" cut, (3) for 52" cut 636M and 652M QuikTrak | **91-312** | | 18 | 5/8 | | | 2.50/.203 | 0 | 1 | Xtended |
| (2) for 36" cut, (3) for 52" cut 636M and 652M QuikTrak | **91-637** | | 18 | 5/8 | | | 2.50/.203 | 0 | 1 | |
| (2) for 36" cut, (3) for 52" cut 636M and 652M QuikTrak | **94-053** | | 18 | 5/8 | | | 2.50/.250 | 0 | 1 | |
| Gator® G3™ | **96-344** | | 18 | 5/8 | | | 2.50/.203 | 0 | 3/4 | G3 |
| Gator G5™ | **596-344** | | 18 | 5/8 | | | 3.00/.203 | 0 | 1 | High-Lift Xtended Fusion® G5 |
| Gator G6® | **396-726** | | 18 | 5/8 | | | 3.00/.250 | 0 | 1 | Heavy-Duty High-Lift Xtended Fusion® G6 |

B

## John Deere

| | OREGON | OEM No. | Length | Center | Outer | C to C | W / T | Off | Lift | Prod. Code |
|---|---|---|---|---|---|---|---|---|---|---|
| (3) for 52" cut, Quicktrac 652R, 652B | **91-039** | TCU34280 | **18** | 5/8 | | | 2.50/.203 | 1/2 | 1 | |
| (3) for 52" cut, Quicktrac, high-lift, 652R, 652B | **93-010** | | 18 | 5/8 | | | 2.50/.203 | 1/2 | 1-1/8 | Xtended |
| Gator G3 | **93-601** | | 18 | 5/8 | | | 2.50/.203 | 1/2 | 3/4 | G3 |
| Gator G5 | **593-601** | | 18 | 5/8 | | | 3.00/.203 | 1/2 | 1 | High-Lift Xtended Fusion® G5 |
| Gator G6 | **393-601** | | 18 | 5/8 | | | 3.00/.250 | 1/2 | 1 | Heavy-Duty High-Lift Xtended Fusion® G6 |
| (3) for 54" cut, 100 series and D170 | **92-103** | GX21380<br>GY20679<br>GY20684<br>GY20686 | **18-5/8** | 7 pt. Star | | | 2.75/.187 | 1/4 | 1-1/8 | |
| Gator G3 | **92-617** | | 18-5/8 | 7 pt. Star | | | 2.50/.187 | 3/8 | 3/4 | G3 |
| Gator G5 | **592-617** | | 18-5/8 | 7 pt. Star | | | 3.00/.164 | 3/8 | 1 | High-Lift Xtended Fusion® G5 |
| (3) for 54" cut, new style | **91-380** | GY20569<br>M114582<br>M115329<br>M115496 | **18-11/16** | 13/16 | | | 2.50/.203 | 3/8 | 1-1/8 | |
| (3) for 54" cut, performance blade | **91-404** | M135590<br>M76467 | 18-11/16 | 13/16 | | | 2.50/.203 | 5/16 | 7/8 | |
| (3) for 54" cut, Tricycler | **91-384** | M113518 | 18-11/16 | 13/16 | | | 2.50/.203 | 3/8 | 3/4 | |
| Gator® G3™ | **96-306** | M111523 | 18-11/16 | 13/16 | | | 2.50/.203 | 3/8 | 1 | G3 |
| Gator G5™ | **596-306** | | 18-11/16 | 13/16 | | | 3.00/.203 | 3/8 | 1 | High-Lift Xtended Fusion® G5 |
| Gator G6® | **396-706** | | 18-11/16 | 13/16 | | | 3.00/.250 | 3/8 | 1 | Heavy-Duty High-Lift Xtended Fusion® G6 |

B

# Blades - OEM Replacements

## John Deere

| | OREGON | OEM No. | Length | Center | Outer | C to C | W / T | Off | Lift | Prod. Code |
|---|---|---|---|---|---|---|---|---|---|---|
| (3) for 54" cut, 2210, 4010, 4110, 4115, 4210, 4310, 4410, 4510, 4610, 4710, GT225, GT235, GT235E, GT245, GX255, GX325, GX335, GT345, GX355, LX255, LX266, LX277, LX279, LX280, LX288, X series, Z425, Z445 | **90-354** | M143520 | **18-15/16** | 13/16 | | | 2.75/.250 | 1/2 | 1-3/8 | |
| Gator G5 | **596-719** | M145516<br>M152726 | 18-15/16 | 13/16 | | | 3.00/.203 | 1/2 | 1 | High-Lift Xtended Fusion® G5 |
| Gator G6 | **396-719** | | 18-15/16 | 13/16 | | | 3.00/.250 | 1/2 | 1 | Heavy-Duty High-Lift Xtended Fusion® G6 |
| (3) for 54" cut, 7-Iron deck, Z Track, Signature Series | **91-138** | M134305<br>M136195<br>TCU30316 | **19** | 7/8 | | | 2.50/.250 | 7/16 | 1-1/16 | |
| (3) for 54", high-lift, Z Track, Signature Series | **92-118** | M144652<br>M164016<br>TCU30317 | 19 | 7/8 | | | 3.00/.250 | 7/16 | 1-5/16 | |
| Gator G3 | **96-364** | M135334 | 19 | 7/8 | | | 2.50/.203 | 7/16 | 3/4 | G3 |
| Gator® G5™ | **596-769** | | 19 | 7/8 | | | 3.00/.203 | 7/16 | 1 | High-Lift Xtended Fusion® G5 |
| Gator G6® | **396-769** | | 19 | 7/8 | | | 3.00/.250 | 7/16 | 1 | Heavy-Duty High-Lift Xtended Fusion® G6 |
| (2) for 38" cut | **91-400** | AM100945<br>M84472 | **19-1/2** | 11/16 | | | 3.00/.203 | 7/16 | 1-1/2 | |
| (2) for 38" cut, high-lift | **91-398** | | 19-1/2 | 11/16 | | | 3.00/.203 | 7/16 | 1-3/4 | |
| (2) for 38" cut, low-lift | **191-392** | AM100946<br>M82408 | 19-1/2 | 11/16 | 3/8 | 4 | 2.53/.203 | 7/16 | 5/8 | Xtended 100 |
| (2) for 38" cut, mulcher | **91-403** | M112991 | 19-1/2 | 11/16 | | | 2.50/.203 | 3/8 | 1-3/16 | |
| Gator G3™ | **96-309** | AM104652<br>M112974<br>M118958<br>M74449 | 19-1/2 | 11/16 | | | 2.50/.203 | 7/16 | 3/4 | G3 |

GROUP CONTINUES

## John Deere

| | OREGON | OEM No. | Length | Center | Outer | C to C | W / T | Off | Lift | Prod. Code |
|---|---|---|---|---|---|---|---|---|---|---|
| | | | GROUP CONTINUES | | | | | | | |
| Gator G5 | 596-309 | | 19-1/2 | 11/16 | | | 3.00/.203 | 7/16 | 1 | High-Lift Xtended Fusion® G5 |
| Gator G6 | 396-709 | | 19-1/2 | 11/16 | | | 3.00/.250 | 7/16 | 1 | Heavy-Duty High-Lift Xtended Fusion® G6 |
| (2) for 38" cut, standard deck | 92-109 | AM100991<br>AM137324<br>AM137326<br>AM141041<br>M153118<br>M154159<br>M83459 | 19-7/16 | 7 pt. Star | | | 3.00/.203 | 7/16 | 1-3/4 | |
| Gator G6 | 396-352 | | 19-7/16 | 7 pt. Star | | | 3.00/.250 | 7/16 | 1 | Heavy-Duty High-Lift Xtended Fusion® G6 |
| (3) for 60" cut, 1476, 160, 260, 261, 318, 400, 420, 430 | 91-391 | AM35557<br>M112847<br>M48452 | 20-7/16 | 3/4 | | | 2.00/.203 | 0 | 1 | Xtended |
| (3) 60" cut, 160, 2210, 261, 318, 400, 4010, 4100, 4110, 4115, 420, 4200, 4210, 430, 4300, 4310, 4400, 4410, 4500, 4510, 4600, 4610, 4700, 4710, 655, 755, 802, 855, 955 | 91-394 | AM100538<br>M141785<br>M87622 | 20-1/2 | 7/8 | | | 2.50/.312 | 0 | 1 | |
| Gator® G5™<br>Supplied with washer. Washer must be used on all models. | 596-734 | M113878 | 20-1/2 | 7/8 | | | 3.00/.203 | 0 | 1 | High-Lift Xtended Fusion® G5 |
| Gator G6® | 396-734 | | 20-1/2 | 7/8 | | | 3.00/.250 | 0 | 1 | Heavy-Duty High-Lift Xtended Fusion® G6 |
| 21" cut, JS20, JS25, JS30, JS40, JS45, MowMentum | 99-119 | GX22250 | 20-11/16 | 3/8 | | | 2.50/.149 | 3/8 | 1-1/8 | |
| 21" cut walk-behind JS60, JS61, JS 63 and 8800 Fairway Mower, Gator G3™ | 96-811 | GC00032<br>GC00175<br>GC00344<br>GX22190 | 20-3/4 | 3/8 | 7/16 | 1-15/16 | 2.75/.134 | 3/8 | 3/4 | G3 |
| 21" cut, Tri-cycler walk-behind mower, 145Z | 91-443 | M111453<br>M112738<br>M112972<br>M125413<br>M77178 | 20-7/8 | 7/8 | 3/8 | 3-11/16 | 2.75/.134 | 3/8 | 1 | |

B

# Blades - OEM Replacements

## John Deere

| | OREGON | OEM No. | Length | Center | Outer | C to C | W / T | Off | Lift | Prod. Code |
|---|---|---|---|---|---|---|---|---|---|---|
| | **91-078** | M128485 | **20-7/8** | 7/8 | | | 2.50/.312 | 7/16 | 7/8 | |

(3) for 60" cut, 7 Iron decks, 1400, 1500, 2520, 495, 4100, 4200, 4400, 4500, 4600, 4700, 595, 600L, M665, Z-Trac (520, 667, 757, 797,720, 820, 830, 840, 850, 860, 915)

| | | | | | | | | | | |
|---|---|---|---|---|---|---|---|---|---|---|
| | **92-113** | M144196<br>TCU15881 | 20-7/8 | 7/8 | | | 3.00/.250 | 1/2 | 1-1/4 | |

(3) for 60" cut, high-lift, 7 Iron decks, 1400, 1500, 2520, 495, 4100, 4200, 4400, 4500, 4600, 4700, 595, 600L, M665, Z-Trac (520, 667, 757, 797,720, 820, 830, 840, 850, 860, 915)

| | | | | | | | | | | |
|---|---|---|---|---|---|---|---|---|---|---|
| | **91-587** | M131958<br>M168223 | 20-7/8 | 7/8 | | | 2.50/.250 | 3/8 | 1 | |

(3) for 60" cut, mulching, 7 Iron decks, 1400, 1500, 2520, 495, 4100, 4200, 4400, 4500, 4600, 4700, 595, 600L, M665, Z-Trac (520, 667, 757, 797,720, 820, 830, 840, 850, 860, 915)

| | | | | | | | | | | |
|---|---|---|---|---|---|---|---|---|---|---|
| | **596-730** | M133381<br>M163983<br>TCU18990 | 20-7/8 | 7/8 | | | 3.00/.203 | 1/2 | 1 | |
| | | | | | | | High-Lift Xtended Fusion® | | | G5 |

Gator® G5™
Supplied with washer. Washer must be used on all models

| | | | | | | | | | | |
|---|---|---|---|---|---|---|---|---|---|---|
| | **396-730** | | 20-7/8 | 7/8 | | | 3.00/.250 | 1/2 | 1 | |
| | | | | | | | Heavy-Duty High-Lift Xtended Fusion® | | | G6 |

Gator G6®

| | | | | | | | | | | |
|---|---|---|---|---|---|---|---|---|---|---|
| | **91-080**<br>NEW | M163983 | **20-15/16** | 15/16 | | | 2.75/.203 | 9/16 | 1-7/16 | |

(3) for 60" deck, fits models John Deere 737, 757, 777, 797, 997, and 7 Iron

| | | | | | | | | | | |
|---|---|---|---|---|---|---|---|---|---|---|
| | **92-011** | PT14764<br>PT7132 | 20-15/16 | 5/8 | 1/2 | 2-9/16 | 3.00/.120 | 11/16 | 7/8 | |

21" cut, walk-behind mower made by Lawn Boy tri-cut design.

| | | | | | | | | | | |
|---|---|---|---|---|---|---|---|---|---|---|
| | **91-584** | SWP1001513KT | **20-15/16** | 1 | 1/2 | 5 | 2.50/.250 | 7/16 | 1 | |

(3) for 60" cut, grooming mower

| | | | | | | | | | | |
|---|---|---|---|---|---|---|---|---|---|---|
| | **91-135** | TCU34281 | **21** | 5/8 | | | 2.50/.203 | 1/2 | 1 | |

(3) for 61" cut, 661R QuikTrak

| | | | | | | | | | | |
|---|---|---|---|---|---|---|---|---|---|---|
| | **93-011** | | 21 | 5/8 | | | 2.50/.250 | 1/2 | 1-1/8 | |
| | | | | | | | Xtended | | | |

(3) for 61" cut, High Lift, 661R QuikTrak

| | | | | | | | | | | |
|---|---|---|---|---|---|---|---|---|---|---|
| | **93-013** | | 21 | 5/8 | | | 2.50/.250 | 1/2 | 5/8 | |
| | | | | | | | Xtended | | | |

(3) for 61" cut, low-lift, 661R QuikTrak

GROUP CONTINUES

## John Deere

| | OREGON | OEM No. | Length | Center | Outer | C to C | W / T | Off | Lift | Prod. Code |
|---|---|---|---|---|---|---|---|---|---|---|
| | | | GROUP CONTINUES | | | | | | | |
| (3) for 61" cut, mulching, 661R QuikTrak | **91-596** | TCU35394 | 21 | 5/8 | | | 2.50/.203 | 0 | 1 | |
| Gator G3™ | **96-702** | | 21 | 5/8 | | | 2.50/.203 | 1/2 | 1 | G3 |
| Gator G5 | **596-702** | | 21 | 5/8 | | | 3.00/.203 | 1/2 | 1 | High-Lift Xtended Fusion® G5 |
| Gator G6 | **396-702** | | 21 | 5/8 | | | 3.00/.250 | 1/2 | 1 | Heavy-Duty High-Lift Xtended Fusion® G6 |
| (2) for a 42" cut, 100 series tractor | **191-139** | GX20249<br>GX20433<br>GY20567 | **21-3/8** | 11/16 | 3/8 | 3-11/16 | 2.52/.164 | 7/16 | 1 | Xtended 100 |
| Gator G3 | **92-676** | | 21-3/8 | 11/16 | 3/8 | 3-11/16 | 2.50/.187 | 3/8 | 1 | G3 |
| (2) for 42" cut, 102, 105, 107S, 115, 125, 135, D100, D105, D110, D120, D125, D130, LA100, LA105, LA110, LA115, LA120, LA125, LA135, LT160, LT180, SST15, SST16, X110, X120, X125, X145, X225, X300, X304, Z225, Z235 | **92-110** | AM137327<br>AM137329<br>AM141032<br>AM141034<br>M154061<br>M154062 | **21-3/8** | 7 pt. Star | | | 2.75/.203 | 3/8 | 1-5/16 | |
| (2) for 42" cut, mulching, 102, 105, 107S, 115, 125, 135, D100, D105, D110, D120, D125, D130, LA100, LA105, LA110, LA115, LA120, LA125, LA135, LT160, LT180, SST15, SST16, X110, X120, X125, X145, X225, X300, X304, Z225, Z235 | **192-106** | AM137328<br>AM137330<br>AM137333<br>AM141031<br>AM141033<br>GX22151<br>GY20850<br>M149422 | 21-3/8 | 7 pt. Star | | | 2.75/.164 | 7/16 | 7/8 | Xtended 100 |
| Gator® G3™, left-hand blade / CCW rotation (2) for 42" cut, 102/115/125/135 | **92-615** | | 21-3/8 | 7 pt. Star | | | 2.50/.203 | 1/4 | 3/4 | G3 |
| Gator G5™ | **592-615** | | 21-3/8 | 7 pt. Star | | | 3.00/.203 | 3/8 | 1 | High-Lift Xtended Fusion® G5 |
| (2) for 42" cut, model GT225, LX225, LX279, GT225, GT235 | **91-446** | M139976<br>M148613 | **21-7/16** | 13/16 | | | 2.50/.203 | 13/16 | 1-1/4 | |

GROUP CONTINUES

# Blades - OEM Replacements

## John Deere

| | OREGON | OEM No. | Length | Center | Outer | C to C | W / T | Off | Lift | Prod. Code |
|---|---|---|---|---|---|---|---|---|---|---|
| | | | GROUP CONTINUES | | | | | | | |
| (2) for 42" cut, model GT225, LX225, LX279, GT225, GT235 | **92-119** | | **21-7/16** | 13/16 | | | 2.75/.187 | 7/8 | 1-1/4 | |
| Gator G3 | **91-604** | M139975<br>M139977<br>M159046<br>M159047 | 21-7/16 | 13/16 | | | 2.50/.203 | 13/16 | 3/4 | G3 |
| (2) for 42" cut, yard tractor, mulcher models made by John Deere | **91-449** | M127129<br>M139802 | **21-7/16** | 11/16 | | | 2.50/.164 | 7/16 | 1-1/16 | |
| Gator G3 | **96-340** | M124896<br>M139803<br>M145969<br>M156416 | 21-7/16 | 11/16 | | | 2.50/.203 | 7/16 | 1 | G3 |
| (3) for 62" cut, 2305, 2000/3000/4000 series compact utility tractors, X(465, 475, 485, 495, 575, 585, 595, 700, 720, 724, 728, 740, 744, 748) | **90-309** | M143504 | **21-5/8** | 13/16 | | | 2.50/.250 | 1/2 | 1-1/4 | |
| (3) for 62" cut, High Lift,2305, 2000/3000/4000 series compact utility tractors, X(465, 475, 485, 495, 575, 585, 595, 700, 720, 724, 728, 740, 744, 748) | **91-590** | M152727 | 21-5/8 | 13/16 | | | 3.00/.250 | 7/16 | 1-5/16 | |
| Gator® G5™ | **596-771** | | 21-5/8 | 13/16 | | | 3.00/.203 | 1/2 | 1 | High-Lift Xtended Fusion® G5 |
| Gator G6® | **396-771** | | 21-5/8 | 13/16 | | | 3.00/.250 | 1/2 | 1 | Heavy-Duty High-Lift Xtended Fusion® G6 |
| (3) for 62" cut, high-lift | **92-120** | TCU51118 | **21-7/8** | 7/8 | | | 2.50/.312 | 3/8 | 7/8 | |
| Gator G5 | **596-722** | M144297<br>M144935 | 21-7/8 | 7/8 | | | 3.00/.203 | 3/8 | 1 | High-Lift Xtended Fusion® G5 |
| Gator G6 | **396-710** | | 21-7/8 | 7/8 | | | 3.00/.250 | 3/8 | 1 | Heavy-Duty High-Lift Xtended Fusion® G6 |

B

## John Deere

| | OREGON | OEM No. | Length | Center | Outer | C to C | W / T | Off | Lift | Prod. Code |
|---|---|---|---|---|---|---|---|---|---|---|
| (3) for 72" cut | **91-395** | AM102401<br>AM38314<br>M141786<br>M80783 | **24-15/16** | 7/8 | | | 2.50/.312 | 0 | 1 | |
| Gator G5<br>Supplied with washer. Washer must be used on all models. | **596-775** | | 24-15/16 | 7/8 | | | 3.00/.203 | 0 | 1 | High-Lift Xtended Fusion® G5 |
| Gator G6 | **396-775** | | 24-15/16 | 7/8 | | | 3.00/.250 | 0 | 1 | Heavy-Duty High-Lift Xtended Fusion® G6 |
| (2) for 48" cut, (3) for 72" cut, grooming mower | **91-585** | 5WP1008199K2<br>5WP1008199KT | **24-15/16** | 1 | 1/2 | 5 | 2.50/.250 | 3/8 | 1 | |
| Gator® G5™ | **591-585** | 5WP1001511K2<br>5WP100511KT | 24-15/16 | 1 | 1/2 | 5 | 3.00/.203 | 3/8 | 1 | High-Lift Xtended Fusion® G5 |
| (3) for 72" cut, high-lift, 7-Iron Deck | **92-114** | TCU15882 | **25** | 7/8 | | | 3.00/.250 | 1/2 | 1-1/4 | |
| (3) for 72" cut, mulching, 7-Iron Deck | **91-588** | M142514 | 25 | 7/8 | | | 2.50/.250 | 3/8 | 1 | |
| Gator G5 | **596-743** | | 25 | 7/8 | | | 3.00/.203 | 7/16 | 1 | High-Lift Xtended Fusion® G5 |
| Gator G6® | **396-743** | EPC201693<br>M141669 | 25 | 7/8 | | | 3.00/.250 | 1/2 | 1 | Heavy-Duty High-Lift Xtended Fusion® G6 |
| (1) for 27" cut, 7400, Gator G6 | **391-595** | TCU27401<br>TCU27876 | **27** | 13/16 | | | 3.00/.250 | 0 | 1 | Heavy-Duty High-Lift Xtended Fusion® G6 |
| 30" cut, formed center for washer, standard-lift | **91-399** | AM101538<br>AM36407<br>M89454 | **29-9/16** | 11/16 | | | 2.50/.203 | 7/16 | 1-3/8 | |

B

# Blades - OEM Replacements

## Kees

| | OREGON | OEM No. | Length | Center | Outer | C to C | W / T | Off | Lift | Prod. Code |
|---|---|---|---|---|---|---|---|---|---|---|
| (3) for 42" cut, ZEK42200 | **95-084** | 539112078 | **14-5/8** | 5 pt. Star | | | 2.50/.203 | 0 | 1 | |
| Gator G3™ | **95-088** | | 14-5/8 | 5 pt. Star | | | 2.50/.203 | 0 | 3/4 | G3 |
| Gator G5 | **595-088** | | 14-5/8 | 5 pt. Star | | | 3.00/.164 | 0 | 1 | High-Lift Xtended Fusion® G5 |
| (3) for 48" cut, W48 series, W32 series, high-lift | **93-005** | | **16-1/4** | 5/8 | 1/4 | 1-5/8 | 2.50/.250 | 0 | 1-3/16 | |
| (3) for 48" cut | **91-180** | 483011 | 16-1/4 | 5/8 | | | 2.50/.187 | 0 | 1 | |
| (3) for 48" cut | **91-313** | | 16-1/4 | 5/8 | | | 2.50/.203 | 0 | 1 | |
| (2) for 32"cut, (3) for 48" cut, newer style models, HKW4814, HVG48161, MKW48121, MKW48141, MKH48141, ZMB48181, ZMKW48191 | **99-127** | 100340<br>101366 | 16-1/4 | 5/8 | | | 2.50/.203 | 0 | 1-1/16 | |
| (3) for 48" cut, mulching | **91-368** | | 16-1/4 | 5/8 | | | 2.50/.203 | 0 | 1 | Xtended |
| (3) for 48" cut, heavy-duty | **91-183** | | 16-1/4 | 5/8 | | | 2.50/.250 | 0 | 1 | |
| Gator® G3™ | **96-310** | | 16-1/4 | 5/8 | | | 2.50/.203 | 0 | 3/4 | G3 |
| Gator G5™ | **596-310** | | 16-1/4 | 5/8 | | | 3.00/.203 | 0 | 1 | High-Lift Xtended Fusion® G5 |
| Gator G6® | **396-716** | | 16-1/4 | 5/8 | | | 3.00/.250 | 0 | 1 | Heavy-Duty High-Lift Xtended Fusion® G6 |

B

## Kees

| | OREGON | OEM No. | Length | Center | Outer | C to C | W / T | Off | Lift | Prod. Code |
|---|---|---|---|---|---|---|---|---|---|---|
| | **95-087** | 539113425 | **16-1/4** | 5 pt. Star | | | 2.50/.203 | 0 | 1 | |
| (3) for 48" cut, ZEKH48240 | | | | | | | | | | |
| | **595-087** | | 16-1/4 | 5 pt. Star | | | 3.00/.164 | 0 | 1 | |
| | | | | | | | High-Lift Xtended Fusion® | | | G5 |
| Gator G5 | | | | | | | | | | |
| | **91-181** | 363055 | **18** | 5/8 | | | 2.50/.187 | 0 | 1 | |
| | | | | | | | Xtended | | | |
| (2) for 36" cut, (3) for 52" cut, use on series 0,1 medium duty | | | | | | | | | | |
| | **91-256** | 100341<br>101485 | 18 | 5/8 | | | 2.50/.203 | 0 | 1 | |
| | | | | | | | Xtended | | | |
| (2) for 36" cut, (3) for 52" cut, heavy-duty<br>HKW52141, HVG52161, HKH52181, MKW36121, MKW36141,<br>ZMKH52231, ZKH5221, ZKH52251, ZMKW52231, ZWKH52253 | | | | | | | | | | |
| | **91-184** | | 18 | 5/8 | | | 2.50/.250 | 0 | 1 | |
| | | | | | | | Xtended | | | |
| (2) for 36" cut, (3) for 52" cut, heavy-duty, W36 series | | | | | | | | | | |
| | **91-312** | | 18 | 5/8 | | | 2.50/.203 | 0 | 1 | |
| | | | | | | | Xtended | | | |
| (2) for 36" cut, (3) for 52" cut | | | | | | | | | | |
| | **91-218** | | 18 | 5/8 | | | 2.50/.164 | 0 | 1 | |
| | | | | | | | Xtended | | | |
| (2) for 36" cut, (3) for 52" cut, mulching | | | | | | | | | | |
| | **91-335** | | 18 | 5/8 | | | 2.50/.203 | 0 | 1 | |
| | | | | | | | Xtended | | | |
| (2) for 36" cut, (3) for 52" cut, mulching | | | | | | | | | | |
| | **96-344** | | 18 | 5/8 | | | 2.50/.203 | 0 | 3/4 | |
| | | | | | | | | | | G3 |
| Gator® G3™ | | | | | | | | | | |
| | **596-344** | | 18 | 5/8 | | | 3.00/.203 | 0 | 1 | |
| | | | | | | | High-Lift Xtended Fusion® | | | G5 |
| Gator G5™ | | | | | | | | | | |
| | **396-726** | | 18 | 5/8 | | | 3.00/.250 | 0 | 1 | |
| | | | | | | | Heavy-Duty High-Lift Xtended Fusion® | | | G6 |
| Gator G6® | | | | | | | | | | |
| | **91-308** | 101733 | **21** | 5/8 | | | 2.50/.203 | 0 | 1 | |
| (3) for 61" cut, ZKH61121, ZKH61251, ZMKW61231,<br>ZVH061242, ZVKH61272, ZVKW61252, ZWKH61303,<br>ZWKH61243, ZWKH61273 | | | | | | | | | | |
| | **91-209** | | 21 | 5/8 | | | 2.50/.250 | 0 | 1 | |
| | | | | | | | Xtended | | | |
| (3) for 61" cut | | | | | | | | | | |

GROUP CONTINUES

B

# Blades - OEM Replacements

## Kees

| | OREGON | OEM No. | Length | Center | Outer | C to C | W / T | Off | Lift | Prod. Code |
|---|---|---|---|---|---|---|---|---|---|---|
| | | | GROUP CONTINUES | | | | | | | |
| (3) for 61" cut | **91-626** | | 21 | 5/8 | | | 2.50/.203 | 0 | 1 | |
| (3) for 61" cut | **91-638** | | 21 | 5/8 | | | 2.50/.203 | 0 | 1 | |
| (3) for 61" cut | **95-078** | | 21 | 5/8 | | | 2.50/.250 | 0 | 1 | |
| (3) for 61" cut, high-lift | **91-628** | | 21 | 5/8 | | | 3.00/.203 | 0 | 1-1/2 | |
| | | | | | | | Xtended | | | |
| (3) for 61" cut, mulching | **91-596** | | 21 | 5/8 | | | 2.50/.203 | 0 | 1 | |
| Gator® G3™ | **96-347** | | 21 | 5/8 | | | 2.50/.203 | 0 | 3/4 | G3 |
| Gator G5™ | **596-347** | | 21 | 5/8 | | | 3.00/.203 | 0 | 1 | |
| | | | | | | | High-Lift Xtended Fusion® | | | G5 |
| Gator G6® | **396-727** | | 21 | 5/8 | | | 3.00/.250 | 0 | 1 | |
| | | | | | | | Heavy-Duty High-Lift Xtended Fusion® | | | G6 |
| (2) for 42" cut, sand | **195-048** | | **21** | 5 pt. Star | 5/16 | 3-1/8 | 2.25/.187 | 0 | 3/4 | |
| | | | | | | | Xtended | | | 100 |
| (3) for 61" cut, ZELKH6125 | **95-086** | 539113312 | 21 | 5 pt. Star | | | 2.50/.203 | 0 | 1.000 | |
| Gator G3 | **96-900** | | 21 | 5 pt. Star | | | 2.50/.187 | 0 | 3/4 | G3 |
| Gator G5 | **596-900** | | 21 | 5 pt. Star | | | 3.00/.164 | 0 | 1 | |
| | | | | | | | High-Lift Xtended Fusion® | | | G5 |

B

| | OREGON | OEM No. | Length | Center | Outer | C to C | W / T | Off | Lift | Prod. Code |
|---|---|---|---|---|---|---|---|---|---|---|
| **Kees** | | | | | | | | | | |
| (3) for 72" cut | **91-609** | | **25** | 5/8 | | | 2.50/.250 | 0 | 1 | |
| (3) for 72" cut, mulching | **92-169** | | 25 | 5/8 | | | 2.50/.203 | 0 | 1 | Xtended |
| Gator G6 | **396-731** | 539105476<br>72303 | 25 | 5/8 | | | 3.00/.250 | 0 | 1 | Heavy-Duty High-Lift Xtended Fusion® G6 |
| **King Kutter** | | | | | | | | | | |
| (3) for 60" cut, left-hand cut, RFM-60 | **91-452** | 190320<br>502320 | **20-1/16** | 1/2 | | | 2.00/.250 | 1/2 | 7/8 | |
| (3) for 72" cut, left-hand cut, RFM-72, RSFM-72 | **91-453** | 190324<br>190424<br>502324 | **24-1/16** | 1/2 | | | 2.00/.250 | 1/2 | 7/8 | |
| **Kubota** | | | | | | | | | | |
| (3) for 44" cut, model RC44G | **91-430** | 70000-2503<br>70712-34330 | **15-3/8** | 11/16 | 3/8 | 1-1/2 | 2.00/.187 | 0 | 1 | |
| (3) for 48" cut, ZG2048 | **92-047** | K5575-34330<br>K5575-97530 | **16-9/16** | 11/16 | | | 2.50/.250 | 1/2 | 1-1/8 | |
| Gator® G3™ | **96-047** | K5579-92330<br>K5579-92332 | 16-9/16 | 11/16 | | | 2.50/.203 | 1/2 | 3/4 | G3 |
| Gator G6® | **392-047** | | 16-9/16 | 11/16 | | | 3.00/.250 | 1/2 | 1 | Heavy-Duty High-Lift Xtended Fusion® G6 |
| Gator G6 (3) for 48" cut, BX, RCK48-18BX | **391-617** | K5181-71940 | **16-5/8** | 11/16 | | | 3.00/.250 | 5/16 | 1 | Heavy-Duty High-Lift Xtended Fusion® G6 |
| (3) for 48" cut, RCK48P-222Z | **92-124** | K5184-97532<br>K5576-34350<br>K5576-97530 | **16-5/8** | 7/8 | | | 2.50/.250 | 9/16 | 1-1/8 | |
| Gator G5™ | **592-124** | K5576-34340<br>K5915-34360<br>K5915-97530 | 16-5/8 | 7/8 | | | 3.00/.203 | 5/8 | 1 | High-Lift Xtended Fusion® G5 |

B

# Blades - OEM Replacements

## Kubota

| | OREGON | OEM No. | Length | Center | Outer | C to C | W / T | Off | Lift | Prod. Code |
|---|---|---|---|---|---|---|---|---|---|---|
| (3) for 48" cut, Z700 series, RCK48P-723Z | **91-613** | K5583-34340<br>K5583-97530 | **16-5/8** | 1-1/8 | | | 2.50/.250 | 9/16 | 1-1/8 | |
| Gator G6 | **391-613** | K5583-34350 | 16-5/8 | 1-1/8 | | | 3.00/.250 | 1/2 | 1 | Heavy-Duty High-Lift Xtended Fusion® G6 |
| (3) for 48" cut, model RC48G | **91-433** | 70000-25005<br>76500-34330 | **16-11/16** | 11/16 | | | 2.00/.203 | 0 | 1-1/16 | |
| (3) for 48" cut, deck RC48-62H, RC48-62A/F, & RC48G, center mount mower | **91-435** | 70000-34330<br>76505-34330 | **16-11/16** | 11/16 | | | 2.00/.250 | 3/8 | 1-1/16 | |
| (3) for 54" cut, RCK54-18Z, RCK54P-321Z, ZD18, ZD321 | **91-436** | 70000-00605<br>70000-25004<br>76529-34330<br>K5615-34330<br>K5615-34340 | **18-5/8** | 1-1/8 | | | 2.50/.250 | 1/2 | 1-1/16 | |
| (3) for 54" cut, low-lift, RCK54-18Z, RCK54P-321Z, ZD18, ZD321 | **92-132** | K5615-97520<br>K5764-34330<br>K5764-34340<br>K5764-34342 | 18-5/8 | 1-1/8 | | | 2.50/.250 | 5/8 | 13/16 | |
| Gator® G6® | **396-796** | K5613-34340<br>K5613-97530<br>K5615-34342 | 18-5/8 | 1-1/8 | | | 3.00/.250 | 1/2 | 1 | Heavy-Duty High-Lift Xtended Fusion® G6 |
| (3) for 54" cut, RCK54P-227Z, RCK54P-321Z, ZD221, ZG227 | **92-127** | K5619-34350<br>K5619-97530 | **18-5/8** | 7/8 | | | 2.50/.250 | 9/16 | 1-1/8 | |
| Gator G5™ | **596-812** | K5221-71920<br>K5351-34340<br>K5351-34342<br>K5351-99020<br>K5351-99040<br>K5935-34360<br>K5935-97530 | 18-5/8 | 7/8 | | | 3.00/.203 | 5/8 | 1 | High-Lift Xtended Fusion® G5 |
| Gator G6 | **396-812** | | 18-5/8 | 7/8 | | | 3.00/.250 | 5/8 | 1 | Heavy-Duty High-Lift Xtended Fusion® G6 |
| (3) for 54" cut, ZG2354, GR2120 | **92-048** | K5617-34330<br>K5617-97530 | **18-5/8** | 11/16 | | | 2.50/.250 | 1/2 | 1-1/8 | |

GROUP CONTINUES

B

## Kubota

| | OREGON | OEM No. | Length | Center | Outer | C to C | W / T | Off | Lift | Prod. Code |
|---|---|---|---|---|---|---|---|---|---|---|
| Gator® G3™ | **96-748** | K5231-92340<br>K5617-97590<br>K5639-92300<br>K5639-92332 | 18-5/8 | 11/16 | | | 2.50/.203 | 1/2 | 3/4 | Xtended — G3 |
| Gator G6® | **396-748** | | 18-5/8 | 11/16 | | | 3.00/.250 | 1/2 | 1 | Heavy-Duty High-Lift Xtended Fusion® — G6 |
| (2) for 40" cut, RCK40LT, RCK40LTB, RCK40-16T, T1460 | **92-121** | K5111-71940<br>K5111-97520 | **20-3/8** | 11/16 | | | 2.50/.250 | 5/8 | 1-1/8 | |
| (2) for 40" cut, RCK40LT, RCK40LTB, RCK40-16T, T1460 | **92-122** | K5112-71940 | 20-3/8 | 11/16 | | | 2.50/.250 | 9/16 | 1-1/8 | |
| High lift for RCK60-27B, RCK60-24B, RC60B-21 | **92-130** | K5645-97520<br>K5651-34330<br>K5651-34340 | **20-1/2** | 1-1/8 | | | 2.50/.250 | 5/8 | 13/16 | |
| (3) for 60" cut, RCK60-21Z, RCK60-24B, B3030, B7510, B7610, B7800, F2560E, F3060, ZD18, ZD21 | **92-128** | K5645-34330<br>K5645-34340<br>K5645-97530 | 20-1/2 | 1-1/8 | | | 2.50/.250 | 5/8 | 1-1/8 | |
| Gator G3 | **96-363** | | 20-1/2 | 1-1/8 | | | 2.50/.203 | 9/16 | 3/4 | G3 |
| Gator G5™ | **596-810** | | 20-1/2 | 1-1/8 | | | 3.00/.203 | 5/8 | 1 | High-Lift Xtended Fusion® — G5 |
| Gator G6 | **396-810** | | 20-1/2 | 1-1/8 | | | 3.00/.250 | 5/8 | 1 | Heavy-Duty High-Lift Xtended Fusion® — G6 |
| (3) for 60" cut, for Z Series riders | **92-115** | K5371-34330 | **20-1/2** | 7/8 | | | 2.50/.250 | 5/8 | 3/4 | |
| Gator® G3™ | **96-612** | | 20-1/2 | 7/8 | | | 2.50/.203 | 5/8 | 3/4 | G3 |
| Gator G6® | **396-612** | | 20-1/2 | 7/8 | | | 3.00/.250 | 5/8 | 1 | Heavy-Duty High-Lift Xtended Fusion® — G6 |
| (3) for 60" cut, RCK60B-23BX, BX2660, BX24, BX7510 | **92-123** | K5371-99040 | **20-9/16** | 7/8 | | | 2.50/.250 | 7/16 | 13/16 | |

B

# Blades - OEM Replacements

## Kubota

| | OREGON | OEM No. | Length | Center | Outer | C to C | W / T | Off | Lift | Prod. Code |
|---|---|---|---|---|---|---|---|---|---|---|
| (3) for 60" cut, ZD(21, 25F, 28, 323, 326P, 331P, 331LP), ZG327 | **92-049** | K5647-34340<br>K5647-97530<br>K5668-97530 | **20-9/16** | 1-1/8 | | | 2.50/.250 | 9/16 | 1-1/8 | |
| (3) for 60" cut, B1550, B1750, F2560E, F3060, G1900, G2000 | **91-438** | 70000-00602<br>70000-25001<br>76539-34330 | 20-9/16 | 1-1/8 | | | 2.50/.250 | 1/2 | 1-1/8 | |
| Gator G3 | **96-787** | K5945-34360 | 20-9/16 | 1-1/8 | | | 2.50/.203 | 1/2 | 3/4 | G3 |
| Gator G5™ | **596-787** | | 20-9/16 | 1-1/8 | | | 3.00/.203 | 1/2 | 1 | High-Lift Xtended Fusion® G5 |
| Gator G6 | **396-787** | | 20-9/16 | 1-1/8 | | | 3.00/.250 | 1/2 | 1 | Heavy-Duty High-Lift Xtended Fusion® G6 |
| Gator G6 (3) for 60" cut, RCK60P-12000Z | **396-816** | K5955-34360<br>K5955-97530 | **20-9/16** | 1-5/16 | | | 3.00/.250 | 5/8 | 1 | Heavy-Duty High-Lift Xtended Fusion® G6 |
| 21" cut, high-lift, self-propelled, 5HP walk-behind | **91-417** | 65621-37210 | **20-11/16** | 3/4 | 9/16 | 3-9/16 | 2.25/.149 | 1/2 | 11/16 | |
| (2) for 42" Zero Turn mowers, Z122R | **92-184** NEW | K5559-34330 | **21-9/16** | 11/16 | | | 2.50/.250 | 9/16 | 1-1/8 | |
| Gator G6 (2) for 42" cut, RCK42P122Z | **391-612** | K5559-34330 | 21-9/16 | 11/16 | | | 3.00/.250 | 5/8 | 1 | Heavy-Duty High-Lift Xtended Fusion® G6 |
| (3) for 72" cut, Pro Deck | **92-116** | K5677-34340<br>K5677-97530 | **24-1/2** | 1-1/8 | | | 2.50/.250 | 5/8 | 1-3/16 | |
| (3) for 72" cut, RC72 Deck used on B2150D, F2560, F3060 | **91-493** | 70000-25002<br>70000-25013<br>76553-34330<br>K5676-97520<br>K5698-34340<br>K5698-97530 | 24-1/2 | 1-1/8 | | | 2.50/.250 | 9/16 | 7/8 | |
| Gator® G3™ | **96-372** | 70000-25030<br>70090-30708 | 24-1/2 | 1-1/8 | | | 2.50/.203 | 9/16 | 3/4 | G3 |

GROUP CONTINUES

## Kubota

| | OREGON | OEM No. | Length | Center | Outer | C to C | W / T | Off | Lift | Prod. Code |
|---|---|---|---|---|---|---|---|---|---|---|
| Gator G5™ | 596-717 | | 24-1/2 | 1-1/8 | | | 3.00/.203 | 5/8 | 1 | High-Lift Xtended Fusion® G5 |
| Gator G6® | 396-814 | | 24-1/2 | 1-1/8 | | | 3.00/.250 | 5/8 | 1 | Heavy-Duty High-Lift Xtended Fusion® G6 |

GROUP CONTINUES

## Land Pride

| | | | | | | | | | | |
|---|---|---|---|---|---|---|---|---|---|---|
| (3) for 44" cut | 90-205 | 839-267C | 15-11/16 | 5/8 | | | 2.50/.203 | 0 | 13/16 | Xtended |
| Gator G3 | 96-302 | 839-270C | 15-11/16 | 5/8 | | | 2.50/.203 | 0 | 1 | Xtended G3 |
| (3) for 48" cut | 92-207 | 839-157C | 16-1/2 | 5/8 | | | 2.50/.203 | 0 | 13/16 | Xtended |
| (3) for 48" cut, high-lift | 92-737 | | 16-1/2 | 5/8 | | | 2.50/.203 | 0 | 1-1/16 | Xtended |
| (3) for 48" cut, mulching | 92-743 | | 16-1/2 | 5/8 | | | 2.50/.203 | 0 | 1 | Xtended |
| (3) for 48" cut | 91-620 | | 16-1/2 | 5/8 | | | 2.50/.203 | 0 | 1 | Xtended |
| (3) for 48" cut | 91-621 | | 16-1/2 | 5/8 | | | 3.00/.203 | 0 | 1-1/2 | |
| (3) for 48" cut | 92-145 | | 16-1/2 | 5/8 | | | 2.50/.203 | 0 | 1 | |
| (3) for 48" cut | 99-126 | | 16-1/2 | 5/8 | | | 2.50/.203 | 0 | 1-1/16 | |
| Gator® G3™ | 96-308 | 839-270C | 16-1/2 | 5/8 | | | 2.50/.203 | 0 | 1 | G3 |
| Gator G5™ | 596-308 | | 16-1/2 | 5/8 | | | 3.00/.203 | 0 | 1 | High-Lift Xtended Fusion® G5 |
| Gator G6® | 396-735 | | 16-1/2 | 5/8 | | | 3.00/.250 | 0 | 1 | Heavy-Duty High-Lift Xtended Fusion® G6 |

B

# Blades - OEM Replacements

## Land Pride

| | OREGON | OEM No. | Length | Center | Outer | C to C | W / T | Off | Lift | Prod. Code |
|---|---|---|---|---|---|---|---|---|---|---|
| | | | GROUP CONTINUES | | | | | | | |
| AFM4011, 40133, 4211 | **92-175** | 890-326C | **16-7/8** | 1 | | | 2.50/.250 | 3/4 | 13/16 | |
| AFM4011, AMF4211, AMF40133, FDR1548, FDR1648, FDR2548 | **91-087** | 890-325C | **16-7/8** | 1 | | | 2.50/.203 | 13/16 | 13/16 | |
| (3) for 52" cut, Razor Z52, ZR52, ZRP52 | **92-174** | 890-874C | **17-13/16** | 5/8 | | | 2.50/.203 | 0 | 7/8 | |
| 60" cut | **90-208** | 839-179C | **20-15/16** | 5/8 | | | 3.00/.250 | 5/8 | 1 | |
| Gator G6 | **396-703** | 839-181C | 20-15/16 | 5/8 | | | 3.00/.250 | 5/8 | 1 | Heavy-Duty High-Lift Xtended Fusion® G6 |
| (3) for 60" cut, AMF 4014, AT 2560, AT 2660, FD 2560, FDR 1560, FDR 1660, FDR 2560 | **92-172** | 890-375C | **20-15/16** | 1 | | | 2.50/.250 | 3/4 | 15/16 | |
| (3) for 60" cut, high-lift, AMF 4014, AT 2560, AT 2660, FD 2560, FDR 1560, FDR 1660, FDR 2560 | **91-457** | 890-171C<br>890-951C | 20-15/16 | 1 | | | 2.50/.203 | 3/4 | 1-3/16 | |
| (3) for 60" cut, low-lift, AMF 4014, AT 2560, AT 2660, FD 2560, FDR 1560, FDR 1660, FDR 2560 | **92-173** | 890-204C | 20-15/16 | 1 | | | 2.50/.312 | 11/16 | 11/16 | |
| Gator G5™ | **596-627** | 890-702C<br>891-428C | 20-15/16 | 1 | | | 3.00/.203 | 3/4 | 1 | High-Lift Xtended Fusion® G5 |
| (3) for 72" cut, AFM 4016, AFM 40200, AFM 4016, AT2572, AT 2584, AT 2660, AT 2672, FD 2548, FD 2560, FD 2572, FDR 1572, FDR 1648, FDR 1660, FDR 2548, FDR 2572 | **92-170** | 890-318C | **25** | 1 | 1/2 | 6-1/2 | 2.50/.250 | 11/16 | 13/16 | |
| (3) for 72" cut, high-lift, AFM 4016, AFM 40200, AFM 4016, AT2572, AT 2584, AT 2660, AT 2672, FD 2548, FD 2560, FD 2572, FDR 1572, FDR 1648, FDR 1660, FDR 2548, FDR 2572 | **91-456** | 890-172C | 25 | 1 | 1/2 | 6-1/2 | 2.50/.250 | 3/4 | 1-1/8 | |

GROUP CONTINUES

## Land Pride

| | OREGON | OEM No. | Length | Center | Outer | C to C | W / T | Off | Lift | Prod. Code |
|---|---|---|---|---|---|---|---|---|---|---|
| | **92-171** | 890-200C | 25 | 1 | 1/2 | 6-1/2 | 2.50/.312 | 11/16 | 11/16 | |

GROUP CONTINUES

(3) for 72" cut, low-lift, AFM 4016, AFM 40200, AFM 4016, AT2572, AT 2584, AT 2660, AT 2672, FD 2548, FD 2560, FD 2572, FDR 1572, FDR 1648, FDR 1660, FDR 2548, FDR 2572

| | | | | | | | | | | |
|---|---|---|---|---|---|---|---|---|---|---|
| | **396-728** | 890-698C | 25 | 1 | 1/2 | 6-1/2 | 3.00/.250 | 3/4 | 1 | |

Heavy-Duty High-Lift Xtended Fusion® G6

Gator G6®

## Lastec

| | | | | | | | | | | |
|---|---|---|---|---|---|---|---|---|---|---|
| | **91-622** | | **18** | 5/8 | | | 2.50/.203 | 0 | 1 | |

Xtended

(3) for 52" cut, 2552, 2652, 2886

| | | | | | | | | | | |
|---|---|---|---|---|---|---|---|---|---|---|
| | **91-637** | | 18 | 5/8 | | | 2.50/.203 | 0 | 1 | |

(3) for 52" cut, (2) for 36" cut

| | | | | | | | | | | |
|---|---|---|---|---|---|---|---|---|---|---|
| | **91-623** | 027048 | 18 | 5/8 | | | 3.00/.203 | 0 | 1-1/2 | |

Xtended

(3) for 52" cut, (2) for 36" cut, high-lift

| | | | | | | | | | | |
|---|---|---|---|---|---|---|---|---|---|---|
| | **91-235** | | 18 | 5/8 | | | 2.50/.250 | 0 | 7/8 | |

Xtended

(3) for 52" cut, low-lift

| | | | | | | | | | | |
|---|---|---|---|---|---|---|---|---|---|---|
| | **91-218** | | 18 | 5/8 | | | 2.50/.164 | 0 | 1 | |

Xtended

(3) for 52" cut, mulching

| | | | | | | | | | | |
|---|---|---|---|---|---|---|---|---|---|---|
| | **91-181** | | 18 | 5/8 | | | 2.50/.187 | 0 | 1 | |

Xtended

(3) for 52" cut

| | | | | | | | | | | |
|---|---|---|---|---|---|---|---|---|---|---|
| | **91-184** | | 18 | 5/8 | | | 2.50/.250 | 0 | 1 | |

Xtended

(3) for 52" cut

| | | | | | | | | | | |
|---|---|---|---|---|---|---|---|---|---|---|
| | **91-256** | | 18 | 5/8 | | | 2.50/.203 | 0 | 1 | |

Xtended

(3) for 52" cut

| | | | | | | | | | | |
|---|---|---|---|---|---|---|---|---|---|---|
| | **91-312** | | 18 | 5/8 | | | 2.50/.203 | 0 | 1 | |

Xtended

(3) for 52" cut

| | | | | | | | | | | |
|---|---|---|---|---|---|---|---|---|---|---|
| | **91-335** | | 18 | 5/8 | | | 2.50/.203 | 0 | 1 | |

Xtended

(3) for 52" cut

| | | | | | | | | | | |
|---|---|---|---|---|---|---|---|---|---|---|
| | **94-053** | | 18 | 5/8 | | | 2.50/.250 | 0 | 1 | |

(3) for 52" cut

GROUP CONTINUES

B

# Blades - OEM Replacements

## Lastec

| | OREGON | OEM No. | Length | Center | Outer | C to C | W / T | Off | Lift | Prod. Code |
|---|---|---|---|---|---|---|---|---|---|---|
| | | | GROUP CONTINUES | | | | | | | |
| Gator® G3™ | **96-344** | | 18 | 5/8 | | | 2.50/.203 | 0 | 3/4 | G3 |
| Gator G5™ | **596-344** | | 18 | 5/8 | | | 3.00/.203 | 0 | 1 | High-Lift Xtended Fusion® G5 |
| Gator G6® | **396-726** | | 18 | 5/8 | | | 3.00/.250 | 0 | 1 | Heavy-Duty High-Lift Xtended Fusion® G6 |
| (3) for 61" cut, low-lift, 2261, 2661, 2861, 2961, & EF 100 Series | **91-308** | P246 | **21** | 5/8 | | | 2.50/.203 | 0 | 1 | |
| (3) for 61" cut | **91-628** | P128 | 21 | 5/8 | | | 3.00/.203 | 0 | 1-1/2 | Xtended |
| (3) for 61" cut | **91-626** | | 21 | 5/8 | | | 2.50/.203 | 0 | 1 | |
| (3) for 61" cut | **91-209** | | 21 | 5/8 | | | 2.50/.250 | 0 | 1 | Xtended |
| (3) for 61" cut | **95-078** | | 21 | 5/8 | | | 2.50/.250 | 0 | 1 | |
| (3) for 61" cut, mulching | **91-596** | | 21 | 5/8 | | | 2.50/.203 | 0 | 1 | |
| Gator® G3™ | **96-347** | 063265<br>P322 | 21 | 5/8 | | | 2.50/.203 | 0 | 3/4 | G3 |
| Gator G5™ | **596-347** | | 21 | 5/8 | | | 3.00/.203 | 0 | 1 | High-Lift Xtended Fusion® G5 |
| Gator G6® | **396-727** | | 21 | 5/8 | | | 3.00/.250 | 0 | 1 | Heavy-Duty High-Lift Xtended Fusion® G6 |
| (3) for 72" cut | **91-609** | | **25** | 5/8 | | | 2.50/.250 | 0 | 1 | |
| Gator G6 | **396-731** | P107<br>P701<br>P848<br>P849 | 25 | 5/8 | | | 3.00/.250 | 0 | 1 | Heavy-Duty High-Lift Xtended Fusion® G6 |

B

## Lawn-Boy

| | OREGON | OEM No. | Length | Center | Outer | C to C | W / T | Off | Lift | Prod. Code |
|---|---|---|---|---|---|---|---|---|---|---|
| Gator G3 (1) for 20" cut, walk-behind | **96-809** | 112-8841-03 | **19-3/4** | 7/16 | 3/8 | 2-1/2 | 2.25/.134 | 7/16 | 3/4 | Xtended G3 |
| (1) for 21" cut, Insight walk mowers | **94-051** | | **20-13/16** | 7/16 | 3/8 | 2-1/2 | 2.25/.149 | 7/16 | 7/8 | |
| Gator G3 — Insight walk mowers | **96-660** | 108-0954-03 | 20-13/16 | 7/16 | 3/8 | 2-1/2 | 2.25/.134 | 7/16 | 1 | G3 |
| (1) for 21" cut, fits most 21" models | **92-011** | 611240<br>612543<br>612543-01<br>612543-03<br>682915<br>683682<br>684380<br>89844 | **20-15/16** | 5/8 | 1/2 | 2-9/16 | 3.00/.120 | 11/16 | 7/8 | |

## Lesco

| | | | | | | | | | | |
|---|---|---|---|---|---|---|---|---|---|---|
| (3) for 48" cut | **93-005** | 13418 | **16-1/4** | 5/8 | 1/4 | 1-5/8 | 2.50/.250 | 0 | 1-3/16 | |
| (3) for 48" cut | **91-313** | | 16-1/4 | 5/8 | | | 2.50/.203 | 0 | 1 | |
| (3) for 48" cut | **91-180** | | 16-1/4 | 5/8 | | | 2.50/.187 | 0 | 1 | |
| (3) for 48" cut | **99-127** | | 16-1/4 | 5/8 | | | 2.50/.203 | 0 | 1-1/16 | |
| (3) for 48" cut mulching | **91-368** | | 16-1/4 | 5/8 | | | 2.50/.203 | 0 | 1 | Xtended |
| Gator® G3™ | **96-310** | | 16-1/4 | 5/8 | | | 2.50/.203 | 0 | 3/4 | G3 |
| Gator G5™ | **596-310** | | 16-1/4 | 5/8 | | | 3.00/.203 | 0 | 1 | High-Lift Xtended Fusion® G5 |
| Gator G6® | **396-716** | | 16-1/4 | 5/8 | | | 3.00/.250 | 0 | 1 | Heavy-Duty High-Lift Xtended Fusion® G6 |

B

# Blades - OEM Replacements

## Lesco

| | OREGON | OEM No. | Length | Center | Outer | C to C | W / T | Off | Lift | Prod. Code |
|---|---|---|---|---|---|---|---|---|---|---|
| (3) for 48" cut | **93-009** | 50227 | **16-1/4** | 5/8 | | | 2.50/.203 | 1/2 | 1-1/8 | |
| Gator G5 | **593-600** | | 16-1/4 | 5/8 | | | 3.00/.203 | 1/2 | 1 | High-Lift Xtended Fusion® G5 |
| (3) for 48" cut | **91-620** | 21871<br>5011 | **16-1/2** | 5/8 | | | 2.50/.203 | 0 | 1 | Xtended |
| (3) for 48" cut, high-lift | **91-621** | 50111 | 16-1/2 | 5/8 | | | 3.00/.203 | 0 | 1-1/2 | |
| Gator G3 | **96-308** | | 16-1/2 | 5/8 | | | 2.50/.203 | 0 | 1 | G3 |
| Gator G5 | **596-308** | | 16-1/2 | 5/8 | | | 3.00/.203 | 0 | 1 | High-Lift Xtended Fusion® G5 |
| Gator® G6® | **396-735** | | 16-1/2 | 5/8 | | | 3.00/.250 | 0 | 1 | Heavy-Duty High-Lift Xtended Fusion® G6 |
| (2) for 36" cut, (3) for 52" cut | **94-022** | 50575 | **18** | 1/2 | | | 2.50/.187 | 3/16 | 1 | |
| (2) for 36" cut, (3) for 52" cut, low-lift | **94-018** | | 18 | 1/2 | | | 2.50/.187 | 3/16 | 11/16 | |
| Gator G3™ | **94-618** | | 18 | 1/2 | | | 2.50/.203 | 3/16 | 3/4 | G3 |
| (2) for 36" cut, (3) for 54" cut | **91-622** | 50125 | **18** | 5/8 | | | 2.50/.203 | 0 | 1 | Xtended |
| (2) for 36" cut, (3) for 54" cut, high-lift | **91-623** | 50140 | 18 | 5/8 | | | 3.00/.203 | 0 | 1-1/2 | Xtended |
| (2) for 36" cut, (3) for 54" cut, low-lift | **91-235** | | 18 | 5/8 | | | 2.50/.250 | 0 | 7/8 | Xtended |
| (2) for 36" cut, (3) for 54" cut | **91-181** | | 18 | 5/8 | | | 2.50/.187 | 0 | 1 | Xtended |

GROUP CONTINUES

## Lesco

| | OREGON | OEM No. | Length | Center | Outer | C to C | W / T | Off | Lift | Prod. Code |
|---|---|---|---|---|---|---|---|---|---|---|
| | | | GROUP CONTINUES | | | | | | | |
| (2) for 36" cut, (3) for 54" cut | 91-184 | | 18 | 5/8 | | | 2.50/.250 | 0 | 1 | |
| | | | | | | | Xtended | | | |
| (2) for 36" cut, (3) for 54" cut | 91-256 | | 18 | 5/8 | | | 2.50/.203 | 0 | 1 | |
| | | | | | | | Xtended | | | |
| (2) for 36" cut, (3) for 54" cut | 91-312 | | 18 | 5/8 | | | 2.50/.203 | 0 | 1 | |
| | | | | | | | Xtended | | | |
| (2) for 36" cut, (3) for 54" cut | 91-637 | | 18 | 5/8 | | | 2.50/.203 | 0 | 1 | |
| (2) for 36" cut, (3) for 54" cut | 94-053 | | 18 | 5/8 | | | 2.50/.250 | 0 | 1 | |
| (2) for 36" cut, (3) for 54" cut, mulching | 91-335 | | 18 | 5/8 | | | 2.50/.203 | 0 | 1 | |
| | | | | | | | Xtended | | | |
| (2) for 36" cut, (3) for 54" cut, mulching | 91-218 | | 18 | 5/8 | | | 2.50/.164 | 0 | 1 | |
| | | | | | | | Xtended | | | |
| Gator® G3™ | 96-344 | | 18 | 5/8 | | | 2.50/.203 | 0 | 3/4 | G3 |
| Gator G5™ | 596-344 | | 18 | 5/8 | | | 3.00/.203 | 0 | 1 | |
| | | | | | | | High-Lift Xtended Fusion® | | | G5 |
| Gator G6® | 396-726 | | 18 | 5/8 | | | 3.00/.250 | 0 | 1 | |
| | | | | | | | Heavy-Duty High-Lift Xtended Fusion® | | | G6 |
| (2) for 36" cut, (3) for 52" cut | 93-010 | 50241 | 18 | 5/8 | | | 2.50/.203 | 1/2 | 1-1/8 | |
| | | | | | | | Xtended | | | |
| (2) for 36" cut, (3) for 52" cut | 91-039 | | 18 | 5/8 | | | 2.50/.203 | 1/2 | 1 | |
| Gator G5 | 593-601 | | 18 | 5/8 | | | 3.00/.203 | 1/2 | 1 | |
| | | | | | | | High-Lift Xtended Fusion® | | | G5 |
| Gator G6 | 393-601 | | 18 | 5/8 | | | 3.00/.250 | 1/2 | 1 | |
| | | | | | | | Heavy-Duty High-Lift Xtended Fusion® | | | G6 |

B

# Blades - OEM Replacements

## Lesco

| | OREGON | OEM No. | Length | Center | Outer | C to C | W / T | Off | Lift | Prod. Code |
|---|---|---|---|---|---|---|---|---|---|---|
| (3) for 61" cut | **91-626** | 50170<br>5070 | **21** | 5/8 | | | 2.50/.203 | 0 | 1 | |
| (3) for 61" cut, high-lift | **91-628** | 60116 | 21 | 5/8 | | | 3.00/.203 | 0 | 1-1/2 | Xtended |
| (3) for 61" cut, mulching | **91-596** | | 21 | 5/8 | | | 2.50/.203 | 0 | 1 | |
| (3) for 61" cut | **91-209** | | 21 | 5/8 | | | 2.50/.250 | 0 | 1 | Xtended |
| (3) for 61" cut | **91-638** | | 21 | 5/8 | | | 2.50/.203 | 0 | 1 | |
| (3) for 61" cut | **91-308** | | 21 | 5/8 | | | 2.50/.203 | 0 | 1 | |
| (3) for 61" cut | **95-078** | | 21 | 5/8 | | | 2.50/.250 | 0 | 1 | |
| Gator® G3™ | **96-347** | | 21 | 5/8 | | | 2.50/.203 | 0 | 3/4 | G3 |
| Gator G5™ | **596-347** | | 21 | 5/8 | | | 3.00/.203 | 0 | 1 | High-Lift Xtended Fusion® G5 |
| Gator G6® | **396-727** | | 21 | 5/8 | | | 3.00/.250 | 0 | 1 | Heavy-Duty High-Lift Xtended Fusion® G6 |

## Massey Ferguson

| | OREGON | OEM No. | Length | Center | Outer | C to C | W / T | Off | Lift | Prod. Code |
|---|---|---|---|---|---|---|---|---|---|---|
| (3) for 46" cut, 130, 2000, 2523 | **99-132** | 1737228AYP<br>1737228BZYP | **16-1/8** | 3/4 | | | 2.50/.203 | 0 | 1-1/16 | |
| Gator G5 | **599-132** | | 16-1/8 | 3/4 | | | 3.00/.203 | 0 | 1 | High-Lift Xtended Fusion® G5 |
| (1) 91-723 & (1) 91-701 for 38" cut, 2521, 25195 | **91-723** | 1704856ASM | **16-1/8** | 3/4 | 3/8 | 2-9/16 | 2.00/.203 | 0 | 1-1/8 | |

GROUP CONTINUES

## Massey Ferguson

| | OREGON | OEM No. | Length | Center | Outer | C to C | W / T | Off | Lift | Prod. Code |
|---|---|---|---|---|---|---|---|---|---|---|
| | | | GROUP CONTINUES | | | | | | | |
| (3) for 44" cut, small frame garden tractor (1989 & newer) | **91-705** | 1704100 | 16-1/8 | 3/4 | 3/8 | 2-9/16 | 2.00/.203 | 0 | 1-1/16 | |
| Gator G3 | **90-685** | | 16-1/8 | 3/4 | 3/8 | 2-9/16 | 2.50/.203 | 0 | 3/4 | G3 |
| Gator G5 | **590-685** | | 16-1/8 | 3/4 | 3/8 | 2-9/16 | 3.00/.187 | 0 | 1 | High-Lift Xtended Fusion® G5 |
| (3) for 48" cut, 2900 | **91-313** | 5101986SYP | **16-1/4** | 5/8 | | | 2.50/.203 | 0 | 1 | |
| (3) for 48" cut, 2900 | **91-183** | | 16-1/4 | 5/8 | | | 2.50/.250 | 0 | 1 | |
| (3) for 48" cut, 2900 | **91-180** | | 16-1/4 | 5/8 | | | 2.50/.187 | 0 | 1 | |
| (3) for 48" cut, 2900 | **99-127** | | 16-1/4 | 5/8 | | | 2.50/.203 | 0 | 1-1/16 | |
| (3) for 48" cut, mulching, 2900 | **91-368** | | 16-1/4 | 5/8 | | | 2.50/.203 | 0 | 1 | Xtended |
| Gator® G3™ | **96-310** | | 16-1/4 | 5/8 | | | 2.50/.203 | 0 | 3/4 | G3 |
| Gator G5™ | **596-310** | | 16-1/4 | 5/8 | | | 3.00/.203 | 0 | 1 | High-Lift Xtended Fusion® G5 |
| Gator G6® | **396-716** | | 16-1/4 | 5/8 | | | 3.00/.250 | 0 | 1 | Heavy-Duty High-Lift Xtended Fusion® G6 |
| (3) for 48" cut | **91-606** | 1757303YP | **16-1/2** | 13/16 | | | 2.25/.149 | 0 | 5/8 | |
| Gator G6 | **391-606** | | 16-1/2 | 13/16 | | | 3.00/.250 | 0 | 1 | Heavy-Duty High-Lift Xtended Fusion® G6 |

B

# Blades - OEM Replacements

## Massey Ferguson

| | OREGON | OEM No. | Length | Center | Outer | C to C | W / T | Off | Lift | Prod. Code |
|---|---|---|---|---|---|---|---|---|---|---|
| (3) for 50" cut, 2600 | **91-706** | 1726453ASM | **18-1/8** | 3/4 | 3/8 | 2-9/16 | 2.00/.203 | 0 | 1 | |
| Gator G3 | **90-698** | 1726453ASM | 18-1/8 | 3/4 | 3/8 | 2-9/16 | 2.50/.203 | 0 | 3/4 | G3 |
| Gator G5 | **590-698** | | 18-1/8 | 3/4 | 3/8 | 2-9-16 | 3.00/.187 | 0 | 1 | High-Lift Xtended Fusion® G5 |
| Gator G6 | **390-698** | | 18-1/8 | 3/4 | 3/8 | 2-9/16 | 3.00/.250 | 0 | 1 | Heavy-Duty High-Lift Xtended Fusion® G6 |
| (3) for 52" cut, 2300, MF2523, MF355X, MRZT26520 | **99-133** | 1737252<br>1737252BZYP | **18-1/2** | 3/4 | | | 2.50/.203 | 0 | 1-1/1 | |
| Gator® G3™ | **96-133** | 11913<br>11914<br>11949<br>539118672<br>539118673 | 18-1/2 | 3/4 | | | 2.50/.203 | 0 | 3/4 | G3 |
| Gator G5™ | **599-133** | | 18-1/2 | 3/4 | | | 3.00/.203 | 0 | 1 | High-Lift Xtended Fusion® G5 |
| (3) for 61" cut, 3900 | **91-209** | 5101755S<br>5101755SYP | **21** | 5/8 | | | 2.50/.250 | 0 | 1 | Xtended |
| (3) for 61" cut, 3900 | **91-628** | | 21 | 5/8 | | | 3.00/.203 | 0 | 1-1/2 | Xtended |
| (3) for 61" cut, 3900 | **91-308** | 5104045SYP | 21 | 5/8 | | | 2.50/.203 | 0 | 1 | |
| (3) for 61" cut, 3900 | **91-626** | | 21 | 5/8 | | | 2.50/.203 | 0 | 1 | |
| (3) for 61" cut, 3900 | **93-008** | | 21 | 5/8 | 1/4 | 1-5/8 | 2.50/.250 | 0 | 1-3/16 | Xtended |
| (3) for 61" cut, 3900 | **95-078** | | 21 | 5/8 | | | 2.50/.250 | 0 | 1 | |

GROUP CONTINUES

## Massey Ferguson

| | OREGON | OEM No. | Length | Center | Outer | C to C | W / T | Off | Lift | Prod. Code |
|---|---|---|---|---|---|---|---|---|---|---|
| | | | GROUP CONTINUES | | | | | | | |
| (3) for 61" cut, mulching, 3900 | **91-596** | | 21 | 5/8 | | | 2.50/.203 | 0 | 1 | |
| Gator G3 | **96-347** | | 21 | 5/8 | | | 2.50/.203 | 0 | 3/4 | G3 |
| Gator G5 | **596-347** | | 21 | 5/8 | | | 3.00/.203 | 0 | 1 | High-Lift Xtended Fusion® G5 |
| Gator G6® | **396-727** | | 21 | 5/8 | | | 3.00/.250 | 0 | 1 | Heavy-Duty High-Lift Xtended Fusion® G6 |
| (2) for 42" cut | **91-605** | 1737816BM<br>1737816BMYP | **21-3/16** | 13/16 | | | 2.25/.149 | 7/16 | 13/16 | |
| Gator G6 | **391-605** | | 21-3/16 | 13/16 | | | 3.00/.250 | 7/16 | 1 | Heavy-Duty High-Lift Xtended Fusion® G6 |
| (2) for 42" cut | **91-607** | 1758878BMYP | **21-5/16** | 13/16 | | | 2.25/.149 | 0 | 5/8 | |
| Gator® G6® | **391-607** | | 21-5/16 | 13/16 | | | 3.00/.250 | 0 | 1 | Heavy-Duty High-Lift Xtended Fusion® G6 |
| (1) 91-723 & (1) 91-701 for 38" cut, 2521, 25195 | **91-701** | 1704101<br>1704101A<br>1704101ASM<br>1716695ASM | **22-1/4** | 3/4 | 3/8 | 2-9/16 | 2.00/.203 | 0 | 1-1/16 | |
| Gator G3™ | **96-654** | | 22-1/4 | 3/4 | 3/8 | 2-9/16 | 2.50/.203 | 0 | 3/4 | G3 |
| (3) for 72" cut | **91-609** | 5102227S | **25** | 5/8 | | | 2.50/.250 | 0 | 1 | |
| Gator G6 | **396-731** | | 25 | 5/8 | | | 3.00/.250 | 0 | 1 | Heavy-Duty High-Lift Xtended Fusion® G6 |

B

# Blades - OEM Replacements

## MTD

| | OREGON | OEM No. | Length | Center | Outer | C to C | W / T | Off | Lift | Prod. Code |
|---|---|---|---|---|---|---|---|---|---|---|
| (2) 98-487 & (1) 98-486 for 46" cut, high-lift | **98-486** | 742-0486<br>742-0486A<br>942-0486<br>942-0486A | **14-13/16** | 3/8 | 5/16 | 2-1/2 | 3.00/.149 | 5/16 | 1-1/4 | |
| (1) 98-056 & (2) 98-057 for 46" cut - star center hole, center blade for 600" & 800 series, deep deck, 1996 & before | **98-056** | 742-0543<br>942-0543 | **14-13/16** | 11/16<br>6 pt. Star | 5/16 | 2-1/2 | 3.00/.120 | 5/16 | 1-1/8 | |
| (1) 98-069 and (2) 98-054, for 46" cut - star center hole, center blade for 46" cut model series 600 and 800 built since 1997 | **98-069** | 742-0645<br>942-0645 | **14-7/8** | 5/8<br>6 pt. Star | | | 3.00/.120 | 5/16 | 1-3/16 | |
| Gator G3 | **98-670** | | 14-7/8 | 5/8<br>6 pt. Star | | | 2.50/.187 | 5/16 | 3/4 | G3 |
| (1) 98-061 & (2) 198-063 for 46" cut - star center hole, center blade, 3 in 1 mulching blade, 1999 & after, fits auto-drive step through tractors | **98-061** | 742-0612<br>742-0612A<br>942-0612<br>942-0612A | 14-7/8 | 5/8<br>6 pt. Star | | | 2.50/.149 | 7/16 | 1-3/16 | Xtended |
| (1) 98-084 & (2) 98-085 for 46" cut - star center hole, center blade, 3 in 1 mulching blade, 1999 & after, fits auto-drive step through tractors | **98-084** | | 14-7/8 | 5/8<br>6 pt. Star | | | 2.50/.203 | 7/16 | 1-1/8 | Xtended |
| Gator® G3™ | **98-637** | 742-04049<br>742-04124-X<br>742-0612-X<br>942-04124-X<br>942-0612-X | 14-7/8 | 5/8<br>6 pt. Star | | | 2.50/.187 | 7/16 | 3/4 | G3 |
| (3) for 44" cut | **91-414** | 742-03002-0637<br>742-3002<br>759-3812 | **15-1/8** | 3/4 | | | 2.50/.203 | 1/2 | 11/16 | |
| (3) for 44" cut | **91-073** | 742-3036<br>759-3929<br>759-3939<br>OCC-742-3036 | **16** | 3/4 | 5/16 | 2-1/2 | 2.50/.203 | 9/16 | 1-1/8 | |
| (3) for 44" cut | **98-080** | 02005020<br>1008616 | 16 | 3/4 | | | 3.00/.203 | 7/16 | 1-5/16 | |
| Gator G5™ | **596-373** | | 16 | 3/4 | 5/16 | 2-1/2 | 3.00/.187 | 1/2 | 1 | High-Lift Xtended Fusion® G5 |

B

## MTD

| | OREGON | OEM No. | Length | Center | Outer | C to C | W / T | Off | Lift | Prod. Code |
|---|---|---|---|---|---|---|---|---|---|---|
| (2) for 32" cut, (2) 98-487 & (1) 98-486 for 46" cut, side discharge decks | **98-487** | 742-0487<br>742-0487A<br>942-0487A | **16-1/4** | 3/8 | 5/16 | 2-1/2 | 3.00/.149 | 5/16 | 1-3/16 | |
| (1) 91-330 & (1) 91-327 for 46" cut, (2) for 32" cut, outside blade for 46" cut | **91-330** | 742-3011<br>742-3011-0637<br>759-3819 | **16-1/4** | 3/4 | | | 3.00/.203 | 5/16 | 1-3/8 | |
| (2) 198-063 & (1) 98-061 for 46" cut - star center hole, outside blades, 3 in 1 mulcher, 1999 & after,fits auto-drive step through tractors | **198-063** | 742-0611<br>742-0611A<br>942-0611<br>942-0611A | **16-1/4** | 5/8<br>6 pt. Star | | | 2.50/.149 | 7/16 | 1-1/8 | |
| | | | | | | | Xtended | | | 100 |
| (2) 98-085 & (1) 98-084 for 46" cut - star center hole, outside blades, 3 in 1 mulcher, 1999 & after,fits auto-drive step through tractors | **98-085** | | 16-1/4 | 5/8<br>6 pt. Star | | | 2.50/.203 | 7/16 | 1-1/8 | |
| | | | | | | | Xtended | | | |
| Gator® G3™ | **98-640** | 742-04043<br>742-04125-X<br>742-0611-X<br>942-04125-X<br>942-0611-X | 16-1/4 | 5/8<br>6 pt. Star | | | 2.50/.187 | 7/16 | 3/4 | |
| | | | | | | | | | | G3 |
| Gator G5™ | **598-640** | | 16-1/4 | 5/8<br>6 pt. Star | | | 3.00/.164 | 7/16 | 1 | |
| | | | | | | | High-Lift Xtended Fusion® | | | G5 |
| (2) 98-054 & (1) 98-069 for 46" cut, outside blades for 46" cut model series 600 & 800 built since 1997 | **98-054** | 742-0644<br>942-0644 | **16-1/4** | 5/8<br>6 pt. Star | | | 3.00/.120 | 5/16 | 1-3/16 | |
| Gator G3 | **98-634** | | 16-1/4 | 5/8<br>6 pt. Star | | | 2.50/.187 | 5/16 | 3/4 | |
| | | | | | | | | | | G3 |
| (1) 98-083 & (2) 98-082 for 46" cut LT1046, center blade, round hole | **98-082** | 742-04015<br>759-04019 | **16-5/16** | 3/4 | | | 2.50/.203 | 7/16 | 1-1/8 | |
| | | | | | | | Xtended | | | |
| (2) 98-057 & (1) 98-056 for 46" cut, outside blades for 600 & 800 series, deep deck, 1996 and before | **98-057** | 742-0542<br>942-0542 | **16-1/4** | 11/16<br>6 pt. Star | 5/16 | 2-1/2 | 3.00/.120 | 5/16 | 1-3/16 | |

B

# Blades - OEM Replacements

## MTD

| | OREGON | OEM No. | Length | Center | Outer | C to C | W / T | Off | Lift | Prod. Code |
|---|---|---|---|---|---|---|---|---|---|---|
| (3) for 50" cut, side discharge, fits models 985, 992, 993, 958, 998 1997 & before | **98-037** | 742-0171<br>742-0171B<br>942-0171B<br>OEM-742-0171B | **17-1/4** | 3/8 | 5/16 | 2-1/2 | 2.50/.187 | 5/16 | 1-1/8 | |
| | **98-152**<br>NEW | 942-05052 | **17-1/4** | 5/8<br>5 pt. Star | | | 2.50/.164 | 9/16 | 1-3/16 | |
| (3) for 50" cut, built since 1998 | **98-064-1** | 742-0623<br>942-0623<br>OEM-742-0623 | **17-5/16** | 5/8<br>6 pt. Star | | | 2.50/.187 | 1/4 | 1-3/16 | |
| Gator® G5™ | **598-064** | | 17-5/16 | 5/8<br>6 pt. Star | | | 3.00/.149 | 5/16 | 1 | High-Lift Xtended Fusion® G5 |
| (3) for 50" cut | **198-086** | 742-04053<br>742-04053A<br>742-04053B<br>742-04053C<br>942-04053<br>942-04053A<br>942-04053B<br>942-04053C | **17-7/8** | 5/8<br>6 pt. Star | | | 2.50/.149 | 7/8 | 3/4 | Xtended 100 |
| (3) for 50" cut, high-lift bagger | **98-097** | 742-04056<br>742-04056-0637<br>742-04056A<br>742-04056B<br>742-04056B-0637<br>742-04056C<br>942-04056A<br>942-04056C | 17-7/8 | 5/8<br>6 pt. Star | | | 2.50/.149 | 15/16 | 1-3/8 | |
| Gator G3™ | **91-938** | 942-04053-X | 17-7/8 | 5/8<br>6 pt. Star | | | 2.50/.187 | 15/16 | 3/4 | G3 |
| Gator G5 | **591-938** | | 17-7/8 | 5/8<br>6 pt. Star | | | 3.00/.164 | 15/16 | 1 | High-Lift Xtended Fusion® G5 |
| (2) for 33" cut, wide-area mowers, 12AE764H099, 12AE76JU099, 12AE764Y099, 12A-764M099, 12A-764M799, 12A-764R299 | **98-094** | 742-04154<br>742-04154A<br>942-04154<br>942-04154A | **17-7/8** | bow-tie | | | 2.50/.149 | 1 | 1-1/8 | |
| Gator G3 | **98-671** | | 17-7/8 | bow-tie | 5/16 | 2-1/2 | 2.50/.149 | 1 | 3/4 | G3 |

B

## MTD

| | OREGON | OEM No. | Length | Center | Outer | C to C | W / T | Off | Lift | Prod. Code |
|---|---|---|---|---|---|---|---|---|---|---|
| (3) for 50" cut, LT1024, LT1050 | **98-087** | 742-04068<br>742-04068C<br>759-04047<br>OCC-742-04068 | **17-7/8** | 3/4 | | | 2.50/.149 | 1 | 1-1/8 | Xtended |
| Gator G3 | **96-387** | | 17-7/8 | 3/4 | | | 2.50/.187 | 1 | 3/4 | Xtended — G3 |
| Gator G5 | **596-387** | | 17-7/8 | 3/4 | | | 3.00/.164 | 15/16 | 1 | High-Lift Xtended Fusion® — G5 |
| (3) for 50" cut, M50-KHS, Z Force | **92-015** | 01010168<br>01010168-0637<br>01010168-X<br>OCC-01010168 | **17-7/8** | 3/4 | | | 2.50/.203 | 0 | 1 | |
| Gator® G5™ | **592-015** | | 17-7/8 | 3/4 | | | 3.00/.164 | 0 | 1 | High-Lift Xtended Fusion® — G5 |
| 18" cut, mulcher - 1995 and after, fits bowtie centerhole | **98-065** | 742-0738<br>942-0738<br>OEM-742-0738 | **18** | bow-tie | 5/16 | 2-1/2 | 2.25/.134 | 5/16 | 1-1/8 | |
| (2) for 36" cut, side discharge, deep deck - 1989 & after | **98-496** | 742-0496<br>742-0496A<br>942-0496<br>942-0496A<br>OEM-742-0496 | **18-5/16** | 3/3 | 5/16 | 2-1/2 | 3.00/.149 | 5/16 | 1-1/8 | |
| (3) for 54" cut, 2002 and newer | **98-072** | 490-110-M117<br>742-0677<br>742-0677A<br>742-0677B<br>942-0677<br>942-0677A<br>942-0677B<br>OEM-742-0677 | **18-1/2** | 5/8<br>6 pt. Star | | | 3.00/.203 | 1/2 | 1-1/4 | Xtended |
| Gator G3™ | **98-672** | 942-04338-0684<br>942-0677-S | 18-1/2 | 5/8<br>6 pt. Star | | | 2.50/.203 | 1/2 | 1 | G3 |
| Gator G5 | **598-672** | | 18-1/2 | 5/8<br>6 pt. Star | | | 3.00/.203 | 1/2 | 1 | High-Lift Xtended Fusion® — G5 |
| Gator G6® | **398-672** | | 18-1/2 | 5/8<br>6 pt. Star | | | 3.00/.250 | 1/2 | 1 | Heavy-Duty High-Lift Xtended Fusion® — G6 |

B

# Blades - OEM Replacements

## MTD

| | OREGON | OEM No. | Length | Center | Outer | C to C | W / T | Off | Lift | Prod. Code |
|---|---|---|---|---|---|---|---|---|---|---|
| | **98-151** NEW | 942-05056 | **18-5/8** | 5/8 5 pt. Star | | | 2.50/.164 | 9/16 | 1-3/16 | |
| (2) for 38" cut, side discharge, fits models 476, 487, 490, 493, 494, 495, 496, 497, 497F, 497P, 498, 628, 720, 760, 765 S/D, 138-495A, 138-497A, W7-BG-497B, etc. | **98-019** | 0301-000<br>031203<br>07714<br>742-0122<br>742-0122A<br>942-0122A<br>942-0122B | **18-7/8** | 3/8 | 5/16 | 2-1/2 | 2.00/.134 | 5/16 | 7/8 | |
| 19" cut, mulching, 11A-18M9002, 11A-18MZ202, 12A-18M7002, 12AE189D011, 12AE189E211, 12AE18JA002 | **92-140** | 942-0739 | **19** | bow-tie | 5/16 | 2-1/2 | 2.25/.134 | 1/4 | 1-1/8 | |
| (3) for 54" cut, Tank, M54 | **98-091** | 01005337P<br>1005337<br>2005018<br>942-04416 | **19** | 3/4 | | | 3.00/.203 | 7/16 | 1-5/16 | |
| Gator® G3™ | **96-351** | 02005018-X<br>742-04416-X<br>942-04416-X | 19 | 3/4 | | | 3.00/.203 | 9/16 | 1 | G3 |
| Gator G5™ | **596-351** | | 19 | 3/4 | | | 3.00/.203 | 5/8 | 1 | High-Lift Xtended Fusion® G5 |
| (2) 98-537 & (2) 98-539 for 38" cut, side discharge, deep deck - 1992 & after | **98-537** | 742-0537<br>942-0537 | **19-5/16** | 3/8 | 7/16 | 2-1/2 | 3.00/.149 | 5/16 | 1 | |
| (2) for 38" deck for bagging, (1) 98-044 & (1) 98-043 - 1986 to 1996 in non-bagging operations, right-hand side | **98-044** | 490-110-M111<br>742-0323<br>742-0473<br>742-0473A<br>742-0504<br>742-0504A<br>942-0473A<br>942-0504<br>942-0504A<br>OEM-742-0473<br>OEM-742-0473A | 19-5/16 | 3/8 | 5/16 | 2-1/2 | 3.00/.149 | 5/16 | 1-3/8 | |
| (2) for 38" cut, sand blade, deep deck 1986-1996 | **98-493** | 742-0493<br>942-0493 | 19-5/16 | 3/8 | 5/16 | 2-1/2 | 3.00/.149 | 5/16 | 1-3/16 | |
| (2) for 38" cut | **91-329** | | **19-3/8** | 3/4 | | | 3.00/.203 | 5/16 | 7/8 | |

GROUP CONTINUES

## MTD

| | OREGON | OEM No. | Length | Center | Outer | C to C | W / T | Off | Lift | Prod. Code |
|---|---|---|---|---|---|---|---|---|---|---|
| | | | GROUP CONTINUES | | | | | | | |
| (2) for 38" cut, mulching | **91-057** | 742-0322<br>942-0473A | 19-3/8 | 3/4 | 5/16 | 2-1/2 | 2.75/.187 | 5/16 | 1-1/2 | |
| Gator G3 | **96-697** | | 19-3/8 | 3/4 | | | 3.00/.203 | 5/16 | 3/4 | G3 |
| (2) for 38" cut, star center hole, mulcher, MTD , 3 in 1 blade, deep deck - 1992 & after | **198-058** | 4720610<br>490-110-M114<br>742-0610<br>742-0610A<br>742-0610A-0637<br>942-0610<br>942-0610A<br>GW-7420610<br>OEM-742-0610 | **19-5/16** | 5/8<br>6 pt. Star | | | 2.75/.149 | 3/8 | 1-1/2 | Xtended 100 |
| (2) for 38" cut, use in place of our 198-058 for non-mulching | **198-052** | 742-0654<br>942-0654 | 19-5/16 | 5/8<br>6 pt. Star | | | 3.00/.149 | 5/16 | 1-1/4 | Xtended 100 |
| Gator® G3™ | **98-628** | | 19-5/16 | 5/8<br>6 pt. Star | | | 2.50/.187 | 5/16 | 3/4 | G3 |
| Gator G5™ | **598-628** | | 19-5/16 | 5/8<br>6 pt. Star | | | 3.00/.164 | 5/16 | 1 | High-Lift Xtended Fusion® G5 |
| 20" cut, for walk-behinds with a splined shaft | **98-001** | 742-0620<br>742-0720<br>942-0500<br>942-0620<br>942-0720<br>OEM-742-0620 | **20** | 13/16 | 3/8 | 2-1/2 | 2.25/.134 | 5/16 | 7/8 | |
| 20" cut, mulcher | **98-066** | 490-100-M088<br>742-0740<br>942-0740<br>OEM-742-0740 | **20** | bow-tie | 5/16 | 2-1/2 | 2.25/.134 | 5/16 | 1-1/8 | |
| 20" cut, high-lift blade, fits walk-behind mowers since 1997 with bowtie center hole | **98-068** | 490-100-M115<br>742-0640<br>942-0640<br>OEM-742-0640 | 20 | bow-tie | 5/16 | 2-1/2 | 2.25/.134 | 5/16 | 13/16 | |

B

# Blades - OEM Replacements

## MTD

| | OREGON | OEM No. | Length | Center | Outer | C to C | W / T | Off | Lift | Prod. Code |
|---|---|---|---|---|---|---|---|---|---|---|
| (3) for a 60" cut, 3660 and Z Force, some Tanks | **91-144** | 01001805<br>01003280<br>01003805<br>01004719<br>01004719P<br>1004719-0637<br>OCC-01004719 | **20-1/2** | 3/4 | | | 3.00/.203 | 1/2 | 1-5/16 | |
| Gator G3 | **96-677** | | 20-1/2 | 3/4 | | | 3.00/.203 | 1/2 | 1 | G3 |
| 21" cut, mulching blade for models 312R, 313R, 315R, 488, 828, 848, 100, 400, 500, s 800 - 1993 & after, walk-behind | **98-007** | 742-0563<br>742-0721<br>942-0721<br>OEM-742-0721 | **20-15/16** | 13/16 | 3/8 | 2-1/2 | 2.25/.134 | 5/16 | 15/16 | |
| 21" cut, rear bagger, fits models 312R, 313R, 315R, 488, 828, 848 | **98-002** | 742-0306<br>742-0306A<br>742-0490<br>742-0521<br>742-0621<br>942-0621<br>OEM-742-0621 | 20-15/16 | 13/16 | 3/8 | 2-1/2 | 2.25/.134 | 1/4 | 13/16 | |
| Gator® G3™ | **98-102** | | 20-15/16 | 13/16 | 3/8 | 2-1/2 | 2.50/.134 | 5/16 | 3/4 | G3 |
| 21" cut, mulcher, 1995 and newer, fits bowtie center hole | **198-049** | 01002810<br>490-100-M084<br>742-04100<br>742-04276<br>742-04276S<br>742-0741<br>742-0741A<br>942-04100<br>942-0741<br>942-0741A<br>OEM-742-0741 | **21** | bow-tie | 5/16 | 2-1/2 | 2.25/.134 | 1/4 | 15/16 | Xtended 100 |
| Gator G3 | **98-631** | 742-04380<br>742-04380-0684<br>742-0741A-X<br>742-0741-S<br>942-04380<br>942-04380-0684<br>942-0741A-X<br>942-0741-X | 21 | bow-tie | 5/16 | 2-1/2 | 2.50/.187 | 5/16 | 3/4 | G3 |
| Gator G5 | **598-631** | | 21 | bow-tie | 5/16 | 2-1/2 | 3.00/.149 | 5/16 | 1 | High-Lift Xtended Fusion® G5 |
| (3) for 60" cut, 325, 374 | **91-442** | 759-3411<br>759-3839<br>IH-83614-C1 | **21** | 1/2 | | | 2.00/.250 | 7/16 | 1-1/8 | |
| (3) for 60" cut, Tank and RECON | **98-071** | 01005338<br>01005338P<br>02005019<br>742-04415<br>942-04415 | **21** | 3/4 | | | 3.00/.203 | 1/2 | 1-5/16 | |

GROUP CONTINUES

## MTD

| | OREGON | OEM No. | Length | Center | Outer | C to C | W / T | Off | Lift | Prod. Code |
|---|---|---|---|---|---|---|---|---|---|---|
| | | | GROUP CONTINUES | | | | | | | |
| Gator® G3™ | **96-300** | 02005019-X<br>742-04415-X<br>742-04415-XG<br>942-04415-X | 21 | 3/4 | | | 3.00/.203 | 1/2 | 1 | G3 |
| Gator G5™ | **596-300** | 02005019-X<br>742-04415-X<br>742-04415-XG<br>942-04415-X | 21 | 3/4 | | | 3.00/.203 | 1/2 | 1 | High-Lift Xtended Fusion® G5 |
| (2) for 42" cut, RZT-17 | **98-088** | | **21-1/8** | 5/8<br>6 pt. Star | | | 3.00/.164 | 3/8 | 1-5/16 | |
| (2) for 42" cut, LT1042 | **98-090** | 490-110-C119<br>742-04126<br>942-04126<br>OCC-742-04126 | 21-1/8 | 5/8<br>6 pt. Star | | | 2.75/.187 | 1/4 | 1-3/8 | |
| (2) for 42" cut, mulching, LT1042 | **91-058** | 490-110-C129<br>742-04101<br>759-04081<br>759-3830<br>CC-742-3033<br>OCC-742-04101 | **21-1/8** | 3/4 | 5/16 | 2-1/2 | 2.75/.187 | 1/4 | 1-3/8 | |
| Gator G3 | **91-635** | 759-3830-X | 21-1/8 | 3/4 | 5/16 | 2-1/2 | 2.50/.187 | 1/4 | 3/4 | G3 |
| Gator G5 | **591-635** | | 21-1/8 | 3/4 | 5/16 | 2-1/2 | 3.00/.164 | 5/16 | 1 | High-Lift Xtended Fusion® G5 |
| (2) for 42" cut, high-lift, 1990-1996 | **98-499** | 490-110-M112<br>742-0499<br>742-0499A<br>742-0508<br>742-0508A<br>942-0499<br>942-0499A<br>942-0508<br>942-0508A<br>OEM-742-0499<br>OEM-742-0499A | **21-3/16** | 3/8 | 5/16 | 2-1/2 | 3.00/.149 | 5/16 | 1-1/4 | |
| Gator G5™ | **598-600** | | 21-3/16 | 3/8 | 5/16 | 2-1/2 | 3.00/.149 | 5/16 | 1 | High-Lift Xtended Fusion® G5 |

B

# Blades - OEM Replacements

## MTD

| | OREGON | OEM No. | Length | Center | Outer | C to C | W / T | Off | Lift | Prod. Code |
|---|---|---|---|---|---|---|---|---|---|---|
| (2) for 42" cut, deep deck - 1997 & after; auto-drive 1999 & after | **98-093** | 490-110-M108<br>742-04308<br>742-0656<br>942-04308<br>942-0656<br>OEM-742-04308 | **21-3/16** | 5/8<br>6 pt. Star | | | 2.75/.149 | 3/8 | 7/8 | |
| (2) for 42" cut, high-lift, deep deck - 1997 & after; auto-drive 1999 & after | **198-153** | 742-04087<br>942-04087 | 21-3/16 | 5/8<br>6 pt. Star | | | 3.00/.149 | 5/16 | 1-1/4 | Xtended 100 |
| (2) for 42" cut, mulcher, deep deck - 1997 & after; auto-drive 1999 & after | **198-059** | 490-110-M115<br>7420616<br>742-0616A<br>942-0616<br>942-0616A<br>GW-7420616<br>OEM-742-0616 | 21-3/16 | 5/8<br>6 pt. Star | | | 2.75/.149 | 3/8 | 1-1/2 | Xtended 100 |
| Gator G3 | **98-629** | 742-04312<br>742-04410<br>742-4360<br>942-04308-X<br>942-04312<br>942-04312-X<br>942-04360-0684<br>942-04410<br>942-04410-0684<br>942-0616-X<br>942-4360 | 21-3/16 | 5/8<br>6 pt. Star | | | 2.50/.187 | 5/16 | 3/4 | G3 |
| Gator G5 | **598-629** | | 21-3/16 | 5/8<br>6 pt. Star | | | 3.00/.164 | 5/16 | 1 | High-Lift Xtended Fusion® G5 |
| (2) for 42" cut, lawn tractors | **91-332** | 742-3018<br>759-3824 | **21-1/4** | 3/4 | 5/16 | 2-1/2 | 3.00/.203 | 3/8 | 15/16 | |
| Gator G3 | **96-350** | 742-04374<br>942-04374 | 21-1/4 | 3/4 | 5/16 | 2-1/2 | 2.50/.203 | 3/8 | 1 | G3 |
| | **98-067**<br>NEW | 742-04312 | **21-1/4** | 5/8<br>5 pt. Star | | | 2.50/.164 | 9/16 | 1-3/16 | |
| (1) for 22" cut, walk-behind mower, recycler | **94-322** | 742-04135-4045 | **21-11/16** | 7/16 | 3/8 | 2-1/2 | 2.25/.149 | 7/16 | 13/16 | |
| Gator® G3™ | **96-607** | | 21-11/16 | 7/16 | 3/8 | 2-1/2 | 2.25/.149 | 7/16 | 3/4 | G3 |

B

## MTD

| | OREGON | OEM No. | Length | Center | Outer | C to C | W / T | Off | Lift | Prod. Code |
|---|---|---|---|---|---|---|---|---|---|---|
| 22" cut, mulcher, used on models with splined shaft, models 050, 060, 070, 080, 200, 500- 1993 & after | **98-005** | 742-0522<br>742-0572<br>742-0622<br>742-0722<br>942-0622<br>942-0722<br>OEM-742-0622<br>OEM-742-0722 | **21-15/16** | 13/16 | 3/8 | 2-1/2 | 2.25/.134 | 5/16 | 1-1/8 | |
| 22" cut, mowers after 1995, fits bowtie center hole | **98-050** | 490-100-M087<br>742-0642<br>742-0642A<br>942-0642<br>942-0642A<br>OEM-742-0642 | **21-15/16** | bow-tie | 5/16 | 2-1/2 | 2.25/.134 | 5/16 | 13/16 | |
| 22" cut, mulcher | **98-051** | 742-0742<br>742-0742A<br>942-0742<br>942-0742A<br>OEM-742-0742 | 21-15/16 | bow-tie | 5/16 | 2-1/2 | 2.25/.134 | 1/4 | 15/16 | |
| 2-in-1 blade for side discharge and bagging, fits lawn tractors and RZTs with 42" timing deck (2009 and newer) | **98-095**<br>NEW | 942-04217 | **22** | 5/8<br>5 pt. Star | | | 3.15/.149 | 1/4 | 1-1/2 | |
| (2) for 46" cut, LTX1045, LTX1046, LTX1046VT | **98-096** | 490-110-C131<br>742-04244<br>742-04244A<br>742-04290<br>942-04244<br>942-04244A<br>942-04290<br>OCC-742-04244 | **23-1/4** | 5/8<br>6 pt. Star | | | 3.75/.149 | 1/4 | 1-3/8 | |
| Gator G3<br>Will not work on 2014 and newer 46" stamped decks | **96-401** | 742-04290-X<br>742-04361<br>942-04244A-X<br>942-04244-X<br>942-04361<br>942-04361-0684 | 23-1/4 | 5/8<br>6 pt. Star | | | 3.00/.149 | 1/4 | 1 | G3 |
| Gator G6®, (3) for 72" cut, Tank | **396-815** | 01007522<br>742-04418<br>742-04418-0637 | **25** | 3/4 | | | 3.00/.250 | 0 | 1 | Heavy-Duty High-Lift Xtended Fusion® G6 |

B

# Blades - OEM Replacements

## Murray

| | OREGON | OEM No. | Length | Center | Outer | C to C | W / T | Off | Lift | Prod. Code |
|---|---|---|---|---|---|---|---|---|---|---|
| (3) for 46" cut, high-lift, 1991-1998 all decks | **97-123** | 092117E701<br>092117E701MA<br>492117<br>492117MA<br>5511<br>5511MA<br>92117E700 | **15-3/4** | 13/16 | | | 2.25/.134 | 5/8 | 1 | |
| (3) for 46" cut, high-lift, heavy-duty version of 97-123 | **97-012** | | 15-3/4 | 13/16 | | | 2.25/.187 | 5/8 | 1 | |
| (3) for 46" cut, mulcher, also used on Scotts mower, Murray "3 in 1" blade | **97-017** | 056631E701<br>056631E701MA<br>456631<br>4566313<br>4566313MA<br>456631MA<br>5510<br>5510MA<br>56631E700<br>56631E701<br>656631 | 15-3/4 | 13/16 | | | 2.25/.134 | 11/16 | 1-1/8 | |
| Gator® G3™ | **97-606** | | 15-3/4 | 13/16 | | | 2.50/.187 | 5/8 | 3/4 | G3 |
| Gator G5™ | **597-606** | | 15-3/4 | 13/16 | | | 3.00/.164 | 5/8 | 1 | High-Lift Xtended Fusion® G5 |
| (1) 91-615 & (2) 91-616 for 54" cut | **91-615** | 1736044AYP | **16** | 1 | 3/8 | 2-9/16 | 2.50/.203 | 0 | 1-1/4 | |
| (3) for 46" cut | **99-132** | 1737228BM<br>1737228BZYP | **16-1/8** | 3/4 | | | 2.50/.203 | 0 | 1-1/16 | |
| Gator G5 | **599-132** | 1739889AYP | 16-1/8 | 3/4 | | | 3.00/.203 | 0 | 1 | High-Lift Xtended Fusion® G5 |
| (3) for 48" cut | **195-062** | 180054 | **16-11/16** | 5 pt. Star | 5/16 | 3-15/16 | 2.50/.203 | 0 | 1-1/4 | Xtended 100 |
| (3) for 48" cut, mulching | **95-068** | | 16-11/16 | 5 pt. Star | | | 2.50/.203 | 5/16 | 13/16 | Xtended |

GROUP CONTINUES

B

## Murray

| OREGON | OEM No. | Length | Center | Outer | C to C | W / T | Off | Lift | Prod. Code |
|---|---|---|---|---|---|---|---|---|---|
| | | GROUP CONTINUES | | | | | | | |
| **96-615** | | 16-11/16 | 5 pt. Star | | | 2.50/.203 | 0 | 1 | G3 |
| Gator® G3™ | | | | | | | | | |
| **596-615** | | 16-11/16 | 5 pt. Star | | | 3.00/.187 | 0 | 1 | G5 |
| Gator G5™ | | | | | | | | | |
| **97-018** | 094692E701<br>094692E701MA<br>774048<br>774048MA<br>774052<br>7740523<br>7740523MA<br>774052MA<br>7769205<br>94692<br>94692E700 | **17-11/16** | 13/16 | | | 2.25/.149 | 3/8 | 1-1/8 | |
| (3) for 48" & 50" cut, LT rail frame models, used on Scotts mower, Murray 3 in 1 blade | | | | | | | | | |
| **195-072** | 187256 | **18-7/16** | 5 pt. Star | 5/16 | 3-15/16 | 2.75/.187 | 1/2 | 1-3/16 | 100 |
| (3) for 54" cut | | | | | | | | | |
| **95-082** | | 18-7/16 | 5 pt. Star | | | 2.50/.187 | 5/16 | 13/16 | |
| (3) for 54" cut, mulching | | | | | | | | | |
| **95-605** | | 18-7/16 | 5 pt. Star | | | 2.50/.187 | 1/2 | 3/4 | G3 |
| Gator G3 | | | | | | | | | |
| **595-605** | | 18-7/16 | 5 pt. Star | | | 3.00/.164 | 1/2 | 1 | G5 |
| Gator G5 | | | | | | | | | |
| **97-105** | 020930<br>02400<br>024116<br>025116<br>054372<br>054390E701<br>20930<br>2400<br>24116<br>25116<br>402400<br>429305<br>42930S<br>4543903<br>4543903MA<br>454390MA<br>54372<br>54390<br>54390HT | **18-3/16** | 7/8 h<br>1" w | | | 2.25/.149 | 3/16 | 15/16 | |
| (2) for 36" cut, high-lift, 1977-1988 | | | | | | | | | |
| **195-033** | 193957 | **19-1/4** | 5 pt. Star | 3/8 | 3-1/8 | 2.25/.134 | 1/8 | 1-1/16 | 100 |
| (2) for 38" cut | | | | | | | | | |
| **95-038** | | 19-1/4 | 5 pt. Star | | | 2.25/.187 | 1/8 | 1-1/16 | |
| (2) for 38" cut, heavy-duty version of 195-033 | | | | | | | | | |
| **95-047** | | 19-1/4 | 5 pt. Star | | | 2.25/.187 | 0 | 1 | |
| (2) for 38" cut, high-lift | | | | | | | | | |

GROUP CONTINUES

# Blades - OEM Replacements

## Murray

| | OREGON | OEM No. | Length | Center | Outer | C to C | W / T | Off | Lift | Prod. Code |
|---|---|---|---|---|---|---|---|---|---|---|
| | | | GROUP CONTINUES | | | | | | | |
| (2) for 38" cut, mulching | **195-003** | | 19-1/4 | 5 pt. Star | 5/16 | 3-1/8 | 2.25/.134 | 1/8 | 7/8 | Xtended — 100 |
| (2) for 38" cut, mulching, heavy-duty version of 195-003 | **95-099** | | 19-1/4 | 5 pt. Star | | | 2.25/.149 | 1/8 | 1 | |
| Gator® G3™ | **95-601** | | 19-1/4 | 5 pt. Star | | | 2.50/.187 | 0 | 3/4 | G3 |
| Gator G5™ | **595-601** | | 19-1/4 | 5 pt. Star | | | 3.00/.164 | 0 | 1 | High-Lift Xtended Fusion® — G5 |
| (2) for 38" cut, sand blade, low-lift | **97-010** | 092003E701<br>092003E701MA<br>92003E701 | **19-7/16** | 13/16 | | | 2.25/.120 | 3/8 | 1 | |
| (2) for 38" cut, mulcher, Murray "3 in 1" blade | **97-021** | 092543E701<br>092543E701MA<br>095104E701<br>095104E701MA<br>4951043<br>4951043MA<br>495104MA<br>5519<br>5519MA<br>7101751<br>7101751A<br>7101751AMA<br>95104E701 | 19-7/16 | 13/16 | | | 2.25/.134 | 5/16 | 1 | |
| Gator G5 | **597-602** | | 19-7/16 | 13/16 | | | 3.00/.164 | 3/8 | 1 | High-Lift Xtended Fusion® — G5 |
| (2) for 36" & 38" cut, high-lift | **97-107** | 091742E701<br>091742E701MA<br>491742<br>491742MA<br>540MA<br>5540<br>91742E700 | **19-7/16** | 13/16 | | | 2.25/.134 | 5/8 | 1-1/8 | |
| (2) for 36" & 38" cut, high-lift, heavy-duty | **97-118** | | 19-7/16 | 13/16 | | | 2.25/.187 | 5/8 | 1-3/16 | |
| 20" cut, low-lift | **97-016** | 042785E701<br>042785E701MA<br>642785<br>642785E701 | **19-5/8** | 3/8 | | | 2.25/.134 | 3/8 | 11/16 | |
| 20" cut, Murray "3 in 1" blade | **97-022** | 5536<br>5536MA<br>671921E701<br>672763E701<br>672763E701MA | **19-7/8** | 3/8 | | | 2.25/.134 | 3/8 | 7/8 | |

B

## Murray

| | OREGON | OEM No. | Length | Center | Outer | C to C | W / T | Off | Lift | Prod. Code |
|---|---|---|---|---|---|---|---|---|---|---|
| (2) for 40" cut, Murray "3 in 1" blade | **97-024** | 092544E701<br>092544E701MA<br>095103E701<br>095103E701MA<br>095103E701WMA<br>92544E701<br>95103E701<br>951103E701 | **20-5/16** | 13/16 | | | 2.25/.134 | 5/16 | 1 | |
| (2) for 40" cut, high-lift for bagging, 40603, 40604, 40606, 40620, 40622, 1989-98 models | **97-109** | 091871E701<br>091871E701MA | **20-3/8** | 13/16 | | | 2.25/.134 | 7/16 | 1-1/16 | |
| (2) for 40" cut, high-lift, heavy-duty | **97-119** | 491871<br>491871MA<br>5547<br>5547MA<br>91871E700 | 20-3/8 | 13/16 | | | 2.25/.187 | 7/16 | 1-1/8 | |
| (2) for 40" cut, low-lift & sand blade | **97-006** | 092002E701<br>092002E701MA<br>92002E701 | 20-3/8 | 13/16 | | | 2.25/.134 | 3/8 | 1 | |
| Gator® G3™ | **97-604** | | 20-3/8 | 13/16 | | | 2.50/.187 | 7/16 | 3/4 | G3 |
| (1) 91-615 & (2) 91-616 for 54" cut | **91-616** | 1736043AYP | **20-9/16** | 1 | 3/8 | 2-9/16 | 2.50/.203 | 0 | 1-1/4 | |
| Gator G3 | **96-398** | | 20-9/16 | 1 | 3/8 | 2-9/16 | 2.50/.203 | 0 | 1 | G3 |
| 21" cut, blade for bagging, 1983-1989 | **97-110** | 022860E701<br>22860<br>22860E701<br>422860<br>42739<br>5518MA | **20-7/8** | 3/8 | 5/16 x 1/2 | 2-5/16 | 2.25/.149 | 3/8 | 3/4 | |
| (2) for 42" cut | **195-032** | 138971 | **21** | 5 pt. Star | 5/16 | 3-1/8 | 2.25/.149 | 1/8 | 1-1/16 | Xtended 100 |
| (2) for 42" cut, heavy-duty version of195-032 | **195-039** | | 21 | 5 pt. Star | 5/16 | 3-1/8 | 2.25/.187 | 1/8 | 1-1/18 | Xtended 100 |
| (2) for 42" cut, sand | **195-048** | | 21 | 5 pt. Star | 5/16 | 3-1/8 | 2.25/.187 | 0 | 3/4 | Xtended 100 |

GROUP CONTINUES

# Blades - OEM Replacements

## Murray

| | OREGON | OEM No. | Length | Center | Outer | C to C | W / T | Off | Lift | Prod. Code |
|---|---|---|---|---|---|---|---|---|---|---|
| | | | GROUP CONTINUES | | | | | | | |
| (2) for 42" cut, mulching | **195-005** | | 21 | 5 pt. Star | | | 2.25/.134 | 1/8 | 7/8 | Xtended — 100 |
| (2) for 42" cut, mulching, heavy-duty version of 195-005 | **195-019** | | 21 | 5 pt. Star | | | 2.25/.149 | 1/8 | 15/16 | Xtended — 100 |
| Gator® G3™ | **96-900** | | 21 | 5 pt. Star | | | 2.50/.187 | 0 | 3/4 | G3 |
| Gator G5™ | **596-900** | | 21 | 5 pt. Star | | | 3.00/.164 | 0 | 1 | High-Lift Xtended Fusion® — G5 |
| (2) for 42" cut | **91-610** | 1731898ASM | **21-3/16** | 1 | | | 2.25/.149 | 7/16 | 1 | |
| Gator G6® | **391-610** | | 21-3/16 | 1 | | | 3.00/.250 | 7/16 | 1 | Heavy-Duty High-Lift Xtended Fusion® — G6 |
| (2) for 42" cut, also used on Scotts mower, Murray "3 in 1" blade | **197-019** | 095100E701<br>095100E701MA<br>495100<br>4951003<br>4951003MA<br>495100MA<br>5539<br>5539MA<br>721392<br>721392A<br>721392BM<br>7769203<br>95100<br>95100E701 | **21-1/4** | 7/8 | 3/8 | 3-9/16 | 2.25/.134 | 3/8 | 1 | Xtended — 100 |
| (2) for 42" cut, high-lift | **97-020** | 095101E701<br>095101E701MA<br>5527<br>5527MA<br>95101E701 | 21-1/4 | 7/8 | | | 2.25/.134 | 7/16 | 1 | |
| (2) for 42" cut, high-lift | **97-008** | 492418<br>492418MA<br>92418E701 | 21-1/4 | 7/8 | | | 2.25/.149 | 3/8 | 1-1/8 | |
| (2) for 42" cut, high-lift, heavy-duty | **97-013** | | 21-1/4 | 7/8 | | | 2.25/.187 | 3/8 | 1-1/8 | |

GROUP CONTINUES

B

## Murray

| | OREGON | OEM No. | Length | Center | Outer | C to C | W / T | Off | Lift | Prod. Code |
|---|---|---|---|---|---|---|---|---|---|---|
| (2) for 42" cut, low-lift, non-bagging, heavy-duty | **97-014** | 0905101E701<br>92419<br>92419E701 | 21-1/4 | 7/8 | | | 2.25/.149 | 7/16 | 13/16 | |
| (2) for 42" cut, mulcher, 1992-96, Murray "3-in-1" blade | **97-005** | 056252E701<br>056252E701MA<br>456252<br>456252MA<br>56252E701 | 21-1/4 | 13/16 | | | 2.75/.134 | 5/16 | 13/16 | |
| Gator® G3™ | **97-601** | | 21-1/4 | 7/8 | | | 2.50/.187 | 3/8 | 3/4 | G3 |
| Gator G5™ | **597-601** | | 21-1/4 | 7/8 | | | 3.00/.164 | 3/8 | 1 | High-Lift Xtended Fusion® G5 |
| 22" cut, walk-behind | **99-134** | 1101823<br>1101823E701<br>1101823E701MA<br>5570<br>5570MA | **21-5/8** | 3/8 | 3/8 | 1-7/8 | 2.25/.134 | 1/4 | 1-1/8 | |
| 22" cut, high-lift | **97-015** | 042225E701<br>042225E701MA<br>42225E701<br>442225<br>442225MA | **21-7/8** | 3/8 | | | 2.25/.134 | 3/8 | 11/16 | |
| 22" cut, mulcher, 1987 to present, Murray "3 in 1" blade | **97-001** | 07113E701<br>1101120E701<br>1101120E701MA<br>471499<br>4714993<br>4714993MA | 21-7/8 | 3/8 | | | 2.25/.149 | 3/8 | 1-5/16 | |
| | | | | 471499MA<br>672059E701<br>672735E701 | | | | | | |
| (1) for 22" cut, walk-behind | **91-611** | 7103288YP | **22** | 3/8 | 3/8 | 2-3/4 | 2.25/.164 | 3/16 | 1-1/4 | Xtended |
| Gator® G5™ | **591-611** | 7103288YP | 22 | 3/8 | 3/8 | 2-3/4 | 3.00/.134 | 5/16 | 1 | High-Lift Xtended Fusion® G5 |

GROUP CONTINUES

# Blades - OEM Replacements

## Murray

| | OREGON | OEM No. | Length | Center | Outer | C to C | W / T | Off | Lift | Prod. Code |
|---|---|---|---|---|---|---|---|---|---|---|
| | **99-131** | 7104196BMYP | **28** | 1-1/16 | 1/2 | 7-1/2 | 2.75/.164 | 1/4 | 13/16 | |
| 28" cut, rear engine, no deflector holes | | | | | | | | | | |
| | **99-113** | | 28 | 1-1/16 | 1/2 | 7-1/2 | 2.75/.164 | 1/4 | 13/16 | |
| 28" cut, rear engine, punched for high-lift deflector 79-728 | | | | | | | | | | |
| | **99-114** | | 28 | 1-1/16 | 1/2 | 7-1/2 | 2.75/.187 | 1/4 | 13/16 | |
| 28" cut, rear engine, heavy-duty, punched for high-lift deflector 79-728 | | | | | | | | | | |
| | **96-628** | | 28 | 1-1/16 | 1/2 | 7-1/2 | 2.75/.187 | 1/4 | 3/4 | G3 |
| Gator G3™ | | | | | | | | | | |
| | **596-628** | | 28 | 1-1/16 | 1/2 | 7-1/2 | 3.00/.187 | 5/16 | 1 | G5 |
| Gator G5 | | | | | | | | | | High-Lift Xtended Fusion® |
| | **97-330** | 055969E701<br>055969E701MA<br>056246E701<br>056246E701MA<br>056246E701WMA<br>5557 | **30** | 13/16 | | | 2.75/.149 | 5/8 | 1-1/8 | |
| | | 5557MA<br>55969<br>55969MA<br>56246E701 | | | | | | | | |
| 30" cut, high-lift for bagging | | | | | | | | | | |


Can't find what you're looking for?
Try us online to search the latest products available.

OregonProducts.com

## Poulan

| OREGON | OEM No. | Length | Center | Outer | C to C | W / T | Off | Lift | Prod. Code |
|---|---|---|---|---|---|---|---|---|---|
| **95-014** | 532106635 | **15-3/8** | 3/8 | | | 2.25/.187 | 0 | 1 | |
| (3) for 44" cut, models XEG1182VAR, PP1844B, PP16H44, 418014 (2006-01), 418024 (2006-01), 418034 (2006-01), PP14H44, PP14H44A, PP16H44, PP16H44B, PP16H44C, PP1844, PP1844B, XEG1182VAR | | | | | | | | | |
| **95-607** | | 15-3/8 | 3/8 | | | 2.25/.187 | 0 | 3/4 | G3 |
| Gator® G3™ | | | | | | | | | |
| **195-062** | 532180054<br>539107519<br>575938201<br>575938301 | **16-11/16** | 5 pt. Star | 5/16 | 3-15/16 | 2.50/.203 | 0 | 1-1/4 | 100 |
| (3) for 48" cut, high-lift, PB20VA48, PB23H48LGT, PB23H48YT, PP22V48 | | | | | | Xtended | | | |
| **95-068** | 532173921 | 16-11/16 | 5 pt. Star | | | 2.50/.203 | 5/16 | 13/16 | |
| (3) for 48" cut, mulching, PB20VA48 (2008-2013), PB23H48YT (2004-2013) | | | | | | Xtended | | | |
| **96-615** | | 16-11/16 | 5 pt. Star | | | 2.50/.203 | 0 | 1 | G3 |
| Gator G3 | | | | | | | | | |
| **596-615** | | 16-11/16 | 5 pt. Star | | | 3.00/.187 | 0 | 1 | G5 |
| Gator G5™ | | | | | | High-Lift Xtended Fusion® | | | |
| **95-027** | 532121798 | **17-3/8** | 3/8 | | | 2.25/.187 | 0 | 1 | |
| (3) for 50" cut, fits models XEG1182HAR, PP2050, PP2050D, XC1182HB | | | | | | | | | |
| **95-018** | 532137380 | **17-3/8** | 5 pt. Star | | | 2.25/.149 | 1/8 | 15/16 | |
| (3) for 50" cut, fits models PP20H50J, PP20H50JA, PP22H50K, PP22H50KA | | | | | | | | | |
| **95-050** | | 17-3/8 | 5 pt. Star | | | 2.25/.187 | 0 | 1 | |
| (3) for 50" cut, high-lift | | | | | | | | | |
| **95-609** | | 17-3/8 | 5 pt. Star | | | 2.50/.187 | 0 | 3/4 | G3 |
| Gator G3 | | | | | | | | | |
| **595-609** | | 17-3/8 | 5 pt. Star | | | 3.00/.164 | 0 | 1 | G5 |
| Gator G5 | | | | | | High-Lift Xtended Fusion® | | | |

B

# Blades - OEM Replacements

## Poulan

| | OREGON | OEM No. | Length | Center | Outer | C to C | W / T | Off | Lift | Prod. Code |
|---|---|---|---|---|---|---|---|---|---|---|
| (2) for 36" cut | **95-034** | 532126338 | **18-3/16** | 3/8 | 3/8 | 10 | 2.50/.187 | 0 | 7/8 | |
| (2) for 36" cut, model PP1136, star center hole | **95-036** | 532127841 | **18-3/16** | 5 pt. Star | | | 2.25/.134 | 1/8 | 1 | |
| (2) for 36" cut, model PP1136, heavy-duty version of 95-036 | **95-026** | 532138496 | 18-3/16 | 5 pt. Star | | | 2.25/.187 | 1/8 | 1 | |
| Gator® G3™ | **95-613** | | 18-3/16 | 5 pt. Star | | | 2.50/.187 | 0 | 3/4 | G3 |
| Gator G5™ | **595-613** | | 18-3/16 | 5 pt. Star | | | 3.00/.164 | 0 | 1 | High-Lift Xtended Fusion® G5 |
| (3) for 54" cut, 541ZX, PB22VA54, PB26H54YT, PBGT26H54, PBLGT26H54 | **195-072** | 187254<br>532187256<br>539112053<br>574292401<br>575938401<br>777187256 | **18-7/16** | 5 pt. Star | 5/16 | 3-15/16 | 2.75/.187 | 1/2 | 1-3/16 | Xtended 100 |
| (3) for 54" cut, mulching, 541ZX, PB22VA54, PB26H54YT, PBGT26H54, PBLGT26H54 | **95-082** | 187255<br>532187255<br>575938501<br>582923101 | 18-7/16 | 5 pt. Star | | | 2.50/.187 | 5/16 | 13/16 | |
| Gator G3 | **95-605** | | 18-7/16 | 5 pt. Star | | | 2.50/.187 | 1/2 | 3/4 | G3 |
| Gator G5 | **595-605** | | 18-7/16 | 5 pt. Star | | | 3.00/.164 | 1/2 | 1 | High-Lift Xtended Fusion® G5 |
| (2) for 38" cut, fits XEL1120 | **95-031** | 532121263<br>532143978 | **19-1/4** | 3/8 | | | 2.25/.187 | 0 | 1 | |
| (2) for 38" cut, model PP125H38B | **195-033** | 531307221<br>532127842<br>532138497 | **19-1/4** | 5 pt. Star | 3/8 | 3-1/8 | 2.25/.134 | 1/8 | 1-1/16 | Xtended 100 |

GROUP CONTINUES

B

## Poulan

| | OREGON | OEM No. | Length | Center | Outer | C to C | W / T | Off | Lift | Prod. Code |
|---|---|---|---|---|---|---|---|---|---|---|
| | | | GROUP CONTINUES | | | | | | | |
| (2) for 38" cut, model PP125H38B, heavy-duty version of 195-033 | **95-038** | | 19-1/4 | 5 pt. Star | | | 2.25/.187 | 1/8 | 1-1/16 | |
| (2) for 38" cut, high-lift | **95-047** | | 19-1/4 | 5 pt. Star | | | 2.25/.187 | 0 | 1 | |
| (2) for 38" cut, mulcher | **195-003** | 531307220<br>532134148<br>532193957<br>53234148<br>539110324<br>581116301 | 19-1/4 | 5 pt. Star | 5/16 | 3-1/8 | 2.25/.134 | 1/8 | 7/8 | Xtended — 100 |
| (2) for 38" cut, mulcher | **95-099** | | 19-1/4 | 5 pt. Star | | | 2.25/.149 | 1/8 | 1 | |
| Gator® G3™ | **95-601** | | 19-1/4 | 5 pt. Star | | | 2.50/.187 | 0 | 3/4 | G3 |
| Gator G5™ | **595-601** | | 19-1/4 | 5 pt. Star | | | 3.00/.164 | 0 | 1 | High-Lift Xtended Fusion® — G5 |
| 20" cut, walk-behind | **95-024** | 532850972 | **20** | 5/8 | 3/8 | 1-7/8 | 2.50/.149 | 9/16 | 7/8 | |
| 20" cut, walk-behind, mulching | **95-051** | 532145106 | 20 | 5/8 | 3/8 | 1-7/8 | 2.25/.134 | 7/16 | 11/16 | |
| 20" cut, walk-behind, mulching | **95-044** | 204340218<br>531307212<br>532752233<br>PP22055 | 20 | 5/8 | 3/8 | 1-7/8 | 2.00/.134 | 5/16 | 13/16 | |
| Gator G5 | **595-024** | | 20 | 5/8 | 3/8 | 1-7/8 | 3.00/.134 | 5/8 | 1 | High-Lift Xtended Fusion® — G5 |
| (2) for 42" cut | **195-032** | 531307224<br>532138498<br>532138971<br>PP24004 | **21** | 5 pt. Star | 5/16 | | | 1/8 | 1-1/16 | Xtended — 100 |
| (2) for 42" cut, heavy-duty version of 195-032 | **195-039** | | 21 | 5 pt. Star | 5/16 | 3-1/8 | 2.25/.187 | 1/8 | 1-1/18 | Xtended — 100 |
| | | | GROUP CONTINUES | | | | | | | |

# Blades - OEM Replacements

## Poulan

| | OREGON | OEM No. | Length | Center | Outer | C to C | W / T | Off | Lift | Prod. Code |
|---|---|---|---|---|---|---|---|---|---|---|
| | | | GROUP CONTINUES | | | | | | | |
| (2) for 42" cut, sand | **195-048** | | 21 | 5 pt. Star | 5/16 | 3-1/8 | 2.25/.187 | 0 | 3/4 | Xtended 100 |
| (2) for 42" cut, mulcher | **195-005** | 531307223<br>532134149 | 21 | 5 pt. Star | | | 2.25/.134 | 1/8 | 7/8 | Xtended 100 |
| (2) for 42" cut, heavy-duty version of 195-005 | **195-019** | 532139775 | 21 | 5 pt. Star | | | 2.25/.149 | 1/8 | 15/16 | Xtended 100 |
| (2) for 42" cut | **95-086** | | 21 | 5 pt. Star | | | 2.50/.203 | 0 | 1.000 | |
| Gator® G3™ | **96-900** | 521981601 | 21 | 5 pt. Star | | | 2.50/.187 | 0 | 3/4 | G3 |
| Gator G5™ | **596-900** | | 21 | 5 pt. Star | | | 3.00/.164 | 0 | 1 | High-Lift Xtended Fusion® G5 |
| 21" cut, walk-behind | **95-071** | 531307235 | **21** | 5/8 | 3/8 | 1-7/8 | 2.75/.134 | 1/2 | 1-1/8 | |
| 21" cut, walk-behind, mulching | **195-067** | 531307213<br>532189028<br>539111878<br>PP23020 | 21 | 5/8 | 3/8 | 1-7/8 | 2.25/.134 | 9/16 | 1-1/16 | Xtended 100 |
| 21" cut walk-behind | **95-057** | 532175064<br>532406712<br>581694101 | 21 | 5/8 | 3/8 | 1-7/8 | 2.75/.134 | 1/2 | 1-9/16 | |
| Gator G3 | **95-621** | 580258101<br>580258102 | 21 | 5/8 | 3/8 | 1-7/8 | 2.50/.187 | 1/2 | 3/4 | G3 |
| Gator G5 | **595-621** | | 21 | 5/8 | 3/8 | 1-7/8 | 3.00/.149 | 1/2 | 1 | High-Lift Xtended Fusion® G5 |
| 22" cut, walk-behind | **95-023** | 532406707<br>532406713<br>532850973<br>56401<br>69334<br>8021 | **21-3/4** | 5/8 | 3/8 | 1-7/8 | 2.50/.149 | 9/16 | 7/8 | |
| 22" cut, walk-behind, mulching | **95-042** | | 21-3/4 | 5/8 | 3/8 | 1-7/8 | 2.50/.149 | 7/16 | 15/16 | |

GROUP CONTINUES

## Poulan

| | OREGON | OEM No. | Length | Center | Outer | C to C | W / T | Off | Lift | Prod. Code |
|---|---|---|---|---|---|---|---|---|---|---|
| | | | GROUP CONTINUES | | | | | | | |
| 22" cut, walk-behind, mulching | **195-021** | 141114<br>531301252<br>531307214<br>531307236<br>531307237<br>532134768<br>532141114<br>532152202<br>575157101 | 21-3/4 | 5/8 | 3/8 | 1-7/8 | 2.25/.134 | 1/2 | 15/16 | Xtended — 100 |
| 22" cut, walk-behind, mulching | **95-073** | 532192682<br>582931401<br>917532406707 | 21-3/4 | 5/8 | 3/8 | 1-7/8 | 2.25/.134 | 9/16 | 1-3/16 | |
| Gator® G3™ | **95-602** | | 21-3/4 | 5/8 | 3/8 | 1-7/8 | 2.50/.187 | 1/2 | 3/4 | G3 |
| Gator G5™ | **595-602** | | 21-3/4 | 5/8 | 3/8 | 1-7/8 | 3.00/.149 | 1/2 | 1 | High-Lift Xtended Fusion® — G5 |
| 22" Walk behind | **95-076** | 532420463 | **21-15/16** | 5 pt. Star | | | 2.25/.134 | 9/16 | 13/16 | |
| Gator G3 | **95-615** | 580244001<br>585587701 | 21-15/16 | 5 pt. Star | | | 2.25/.134 | 9/16 | 3/4 | G3 |
| (2) for 46" cut, high-lift, PB185A46LT, PB18VA46, PB19546LT, PB20A46YT, PB22H46YT, PB23H46YT, 461ZX | **195-070** | 532405380<br>575937901<br>777405380 | **22-7/8** | 5 pt. Star | 5/16 | 3-15/16 | 2.75/.164 | 5/16 | 1-1/8 | Xtended — 100 |
| (2) for 46" cut, heavy-duty | **95-370** | | 22-7/8 | 5 pt. Star | | | 2.50/.203 | 5/16 | 1-1/4 | Xtended |
| (2) for 46" cut, mulching, PB19546LT | **95-074** | 532403107 | 22-7/8 | 5 pt. Star | | | 2.25/.149 | 1/8 | 15/16 | Xtended |
| Gator G3 | **96-370** | | 22-7/8 | 5 pt. Star | | | 2.75/.187 | 1/4 | 3/4 | Xtended — G3 |
| Gator G5 | **596-370** | | 22-7/8 | 5 pt. Star | | | 3.00/.187 | 5/16 | 1 | High-Lift Xtended Fusion® — G5 |
| Gator® G5™ | **595-807** | 532419273<br>532419274<br>582928101<br>777419274 | **29-5/8** | 5 pt. Star | | | 3.00/.149 | 5/16 | 1 | High-Lift Xtended Fusion® — G5 |

B

# Blades - OEM Replacements

## Progressive Turf

| | OREGON | OEM No. | Length | Center | Outer | C to C | W / T | Off | Lift | Prod. Code |
|---|---|---|---|---|---|---|---|---|---|---|
| | **91-594** NEW | 526615 | **5-1/4** | 3/4 | | | 2.50/.187 | 1/2 | 5/16 | |
| | **94-124** NEW | 526601 | 5-1/4 | 3/4 | | | 2.50/.187 | 1/2 | 5/8 | |
| (3) for 65" decks, fits SDR-65, high-lift | **94-121** NEW | 522360 | **23** | 1 | 9/16 | 6-1/2 | 2.50/.312 | 11/16 | 3/4 | |
| (4) for 90" deck, fits SDR-90, high-lift | **94-122** NEW | 522364 | **24** | 1 | 9/16 | 6-1/2 | 2.50/.312 | 11/16 | 3/4 | |
| | **91-593** NEW | 522372 | **27** | 1 | 9/16 | 6-1/2 | 2.50/.312 | 3/4 | 1-3/8 | |
| | **94-123** NEW | 522376 | **32** | 1 | 9/16 | 10 | 2.50/.312 | 13/16 | 3/4 | |

## RedHawk

| | | | | | | | | | | |
|---|---|---|---|---|---|---|---|---|---|---|
| (3) for 48" cut, 48KO180B/48KO180H | **99-127** | 148-005 | **16-1/4** | 5/8 | | | 2.50/.203 | 0 | 1-1/16 | |
| (3) for 48" cut | **91-180** | | 16-1/4 | 5/8 | | | 2.50/.187 | 0 | 1 | |
| (3) for 48" cut | **91-183** | | 16-1/4 | 5/8 | | | 2.50/.250 | 0 | 1 | |
| (3) for 48" cut | **91-313** | | 16-1/4 | 5/8 | | | 2.50/.203 | 0 | 1 | |
| (3) for 48" cut, mulching | **91-368** | | 16-1/4 | 5/8 | | | 2.50/.203 | 0 | 1 | Xtended |
| Gator G3™ | **96-310** | | 16-1/4 | 5/8 | | | 2.50/.203 | 0 | 3/4 | G3 |

GROUP CONTINUES

| | OREGON | OEM No. | Length | Center | Outer | C to C | W / T | Off | Lift | Prod. Code |
|---|---|---|---|---|---|---|---|---|---|---|
| **RedHawk** | | | GROUP CONTINUES | | | | | | | |
| Gator G5 | **596-310** | | 16-1/4 | 5/8 | | | 3.00/.203 | 0 | 1 | G5 |
| | | | | | | | High-Lift Xtended Fusion® | | | |
| Gator G6® | **396-716** | | 16-1/4 | 5/8 | | | 3.00/.250 | 0 | 1 | G6 |
| | | | | | | | Heavy-Duty High-Lift Xtended Fusion® | | | |
| **Scag** | | | | | | | | | | |
| (3) for 36" cut, Z-Cat | **91-636** | 482959 | **12-3/16** | 5/8 | | | 2.50/.203 | 0 | 1 | |
| | | | | | | | Xtended | | | |
| Gator G3 | **96-661** | | 12-3/16 | 5/8 | | | 2.50/.203 | 0 | 1 | G3 |
| (2) for 32" cut, (3) for 48" cut | **91-620** | | **16-1/2** | 5/8 | | | 2.50/.203 | 0 | 1 | |
| | | | | | | | Xtended | | | |
| (2) for 32" cut, (3) for 48" cut, high-lift | **91-621** | 48110<br>481706<br>481710<br>48184<br>482461<br>482877 | 16-1/2 | 5/8 | | | 3.00/.203 | 0 | 1-1/2 | |
| (2) for 32" cut, (3) for 48" cut, Freedin Z, Tiger Cat, Tiger Cub, Wildcat | **92-145** | | 16-1/2 | 5/8 | | | 2.50/.203 | 0 | 1 | |
| (3) for 48" cut, sand blade, for use only on Scag Velocity Plus decks | **99-500** | | 16-1/2 | 5/8 | | | 3.00/.203 | 0 | 1-3/16 | |
| | | | | | | | Xtended | | | |
| Gator® G3™ | **96-308** | | 16-1/2 | 5/8 | | | 2.50/.203 | 0 | 1 | G3 |
| Gator G5™ | **596-308** | | 16-1/2 | 5/8 | | | 3.00/.203 | 0 | 1 | G5 |
| | | | | | | | High-Lift Xtended Fusion® | | | |
| Gator G6® | **396-735** | | 16-1/2 | 5/8 | | | 3.00/.250 | 0 | 1 | G6 |
| | | | | | | | Heavy-Duty High-Lift Xtended Fusion® | | | |

B

# Blades - OEM Replacements

## Scag

| | OREGON | OEM No. | Length | Center | Outer | C to C | W / T | Off | Lift | Prod. Code |
|---|---|---|---|---|---|---|---|---|---|---|
| (3) for 52" cut, (2) for 36" cut, fits Tiger Cub, Wildcat, Turf Tiger and Freedom Z52" deck | **91-622** | 48108<br>481707<br>482462 | **18** | 5/8 | | | 2.50/.203 | 0 | 1 | |
| | | | | | | | Xtended | | | |
| (3) for 52" cut, (2) for 36" cut | **91-637** | 482878 | 18 | 5/8 | | | 2.50/.203 | 0 | 1 | |
| (2) for 36" cut, (3) for 52" cut, high-lift | **91-623** | 481711<br>48185 | 18 | 5/8 | | | 3.00/.203 | 0 | 1-1/2 | |
| | | | | | | | Xtended | | | |
| (3) for 52" cut, sand blade, for use only on Scag Velocity Plus decks | **99-501** | | 18 | 5/8 | | | 3.00/.203 | 0 | 1-3/16 | |
| | | | | | | | Xtended | | | |
| Gator G3 | **96-344** | 482961 | 18 | 5/8 | | | 2.50/.203 | 0 | 3/4 | G3 |
| Gator® G5™ | **596-344** | | 18 | 5/8 | | | 3.00/.203 | 0 | 1 | |
| | | | | | | | High-Lift Xtended Fusion® | | | G5 |
| Gator G6® | **396-726** | | 18 | 5/8 | | | 3.00/.250 | 0 | 1 | |
| | | | | | | | Heavy-Duty High-Lift Xtended Fusion® | | | G6 |
| (3) for 61" cut, all models | **91-626** | 48111<br>481708 | **21** | 5/8 | | | 2.50/.203 | 0 | 1 | |
| (3) for 61" cut, all models | **91-638** | 482787<br>482879<br>482881<br>48304 | 21 | 5/8 | | | 2.50/.203 | 0 | 1 | |
| (3) for 61" cut, high-lift version of 91-626 | **91-628** | 481712 | 21 | 5/8 | | | 3.00/.203 | 0 | 1-1/2 | |
| | | | | | | | Xtended | | | |
| (3) for 61" cut, mulching | **91-596** | | 21 | 5/8 | | | 2.50/.203 | 0 | 1 | |
| (3) for 61" cut, sand blade, for use only on Scag Velocity Plus decks | **99-502** | | 21 | 5/8 | | | 3.00/.203 | 0 | 1-3/16 | |

GROUP CONTINUES

B

## Scag

| | OREGON | OEM No. | Length | Center | Outer | C to C | W / T | Off | Lift | Prod. Code |
|---|---|---|---|---|---|---|---|---|---|---|
| | | | GROUP CONTINUES | | | | | | | |
| Gator G3™ | 96-347 | | 21 | 5/8 | | | 2.50/.203 | 0 | 3/4 | G3 |
| Gator G5 | 596-347 | | 21 | 5/8 | | | 3.00/.203 | 0 | 1 | High-Lift Xtended Fusion® G5 |
| Gator G6 | 396-727 | | 21 | 5/8 | | | 3.00/.250 | 0 | 1 | Heavy-Duty High-Lift Xtended Fusion® G6 |
| (3) for 72" cut | 91-627 | 48112<br>481709<br>482788<br>482882 | **24-1/2** | 5/8 | | | 2.50/.203 | 0 | 1 | Xtended |
| (3) for 72" cut, high-lift | 92-035 | | 24-1/2 | 5/8 | | | 3.00/.250 | 0 | 1-3/16 | |
| Gator® G3™ | 96-341 | | 24-1/2 | 5/8 | | | 2.50/.203 | 0 | 3/4 | G3 |
| Gator G5™ | 596-341 | | 24-1/2 | 5/8 | | | 3.00/.203 | 0 | 1 | High-Lift Xtended Fusion® G5 |
| Gator G6® | 396-764 | | 24-1/2 | 5/8 | | | 3.00/.250 | 0 | 1 | Heavy-Duty High-Lift Xtended Fusion® G6 |

## Scotts

| | | | | | | | | | | |
|---|---|---|---|---|---|---|---|---|---|---|
| (3) for 46" cut, high-lift, models made by Murray | 97-123 | | **15-3/4** | 13/16 | | | 2.25/.134 | 5/8 | 1 | |
| (3) for 46" cut, heavy-duty version of 97-123, models made by Murray | 97-012 | | 15-3/4 | 13/16 | | | 2.25/.187 | 5/8 | 1 | |
| (3) for 46" cut, mulcher, models made by Murray | 97-017 | 56631E701 | 15-3/4 | 13/16 | | | 2.25/.134 | 11/16 | 1-1/8 | |
| Gator G3 | 97-606 | | 15-3/4 | 13/16 | | | 2.50/.187 | 5/8 | 3/4 | G3 |
| Gator G5 | 597-606 | | 15-3/4 | 13/16 | | | 3.00/.164 | 5/8 | 1 | High-Lift Xtended Fusion® G5 |

B

# Blades - OEM Replacements

## Scotts

| | OREGON | OEM No. | Length | Center | Outer | C to C | W / T | Off | Lift | Prod. Code |
|---|---|---|---|---|---|---|---|---|---|---|
| (3) for 46" cut, lawn tractor, models made by John Deere | **91-448** | M127466 | **16** | 11/16 | | | 2.50/.203 | 0 | 15/16 | |
| (3) for 46" cut, lawn tractor, models made by John Deere | **91-389** | | 16 | 11/16 | | | 2.00/.203 | 0 | 13/16 | |
| Gator G3 | **96-394** | | 16 | 11/16 | | | 2.50/.203 | 0 | 1 | G3 |
| Gator G6 | **396-725** | | 16 | 11/16 | | | 3.00/.250 | 0 | 1 | Heavy-Duty High-Lift Xtended Fusion® G6 |
| (3) for 48" cut, Yard Tractor, high-lift for bagging | **91-447** | M135589 | **16-9/16** | 13/16 | | | 2.50/.203 | 7/16 | 1-1/16 | |
| Gator® G3™ | **96-618** | | 16-9/16 | 13/16 | | | 2.50/.203 | 7/16 | 1 | G3 |
| (3) for 48" & 50" cut, LT rail frame models, used on Scotts mower, models made by Murray | **97-018** | 774048<br>94692 | **17-11/16** | 13/16 | | | 2.25/.149 | 3/8 | 1-1/8 | |
| (3) for 54" cut, style models made by John Deere | **91-380** | M115496 | **18-11/16** | 13/16 | | | 2.50/.203 | 3/8 | 1-1/8 | |
| (3) for 54" cut, style models made by John Deere | **91-404** | | 18-11/16 | 13/16 | | | 2.50/.203 | 5/16 | 7/8 | |
| 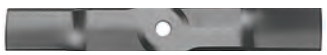 (3) for 54" cut, style models made by John Deere | **91-384** | | 18-11/16 | 13/16 | | | 2.50/.203 | 3/8 | 3/4 | |
| Gator G3 | **96-306** | | 18-11/16 | 13/16 | | | 2.50/.203 | 3/8 | 1 | G3 |
| Gator G5™ | **596-306** | | 18-11/16 | 13/16 | | | 3.00/.203 | 3/8 | 1 | High-Lift Xtended Fusion® G5 |
| Gator G6® | **396-706** | | 18-11/16 | 13/16 | | | 3.00/.250 | 3/8 | 1 | Heavy-Duty High-Lift Xtended Fusion® G6 |

## Scotts

(2) for 42" cut, used on Scotts mower models made by Murray

| OREGON | OEM No. | Length | Center | Outer | C to C | W / T | Off | Lift | Prod. Code |
|---|---|---|---|---|---|---|---|---|---|
| **197-019** | 495100<br>95100 | **21-1/4** | 7/8 | 3/8 | 3-9/16 | 2.25/.134 | 3/8 | 1 | Xtended — **100** |

(2) for 42" cut, mulcher, yard tractor, models made by John Deere

| | | | | | | | | | |
|---|---|---|---|---|---|---|---|---|---|
| **91-449** | M139802 | **21-7/16** | 11/16 | | | 2.50/.164 | 7/16 | 1-1/16 | |

Gator G3

| | | | | | | | | | |
|---|---|---|---|---|---|---|---|---|---|
| **96-340** | | 21-7/16 | 11/16 | | | 2.50/.203 | 7/16 | 1 | **G3** |

## Simplicity

(3) for 42" cut, 600, 1800, 5000, 6000 series

| | | | | | | | | | |
|---|---|---|---|---|---|---|---|---|---|
| **92-146** | 1656147<br>1656147A<br>1656147ASM<br>1656147SM<br>71656147 | **15-5/16** | 3/4 | 3/8 | 2-9/16 | 2.00/.187 | 0 | 1 | |

(1) 91-615 & (2) 91-616 for 54" cut

| | | | | | | | | | |
|---|---|---|---|---|---|---|---|---|---|
| **91-615** | 1687016<br>1687016SM<br>1722090 | **16** | 1 | 3/8 | 2-9/16 | 2.50/.203 | 0 | 1-1/4 | |

(3) for 46" cut, 2620, 2724H, 2726H, AC23420, Broadmoor, Conquest, MF130, MF2523, Prestige, Regent, Regent EX, ZT3000, ZT27460

| | | | | | | | | | |
|---|---|---|---|---|---|---|---|---|---|
| **99-132** | 1737228<br>1737228A<br>1737228AYP<br>1737228BM<br>1737228BMA<br>1737228BZ | **16-1/8** | 3/4<br><br>1737228BZYP<br>1737228SM<br>1737228YP | | | 2.50/.203 | 0 | 1-1/16 | |

Gator® G5™

| | | | | | | | | | |
|---|---|---|---|---|---|---|---|---|---|
| **599-132** | 1739889<br>1739889A<br>1739889AYP<br>1739889BM<br>1739889BMA<br>179889BZ | 16-1/8 | 3/4 | | | 3.00/.203 | 0 | 1 | High-Lift Xtended Fusion® — **G5** |

(1) 91-723 & (1) 91-701 for 38" cut, 500 series, 1600 series, 2500-2600 series, Broadmoor, GTG, GTH, Landlord, LTG, LTH, Regent, ZT

| | | | | | | | | | |
|---|---|---|---|---|---|---|---|---|---|
| **91-723** | 1704856<br>1704856A<br>1704856ASM<br>1704856BMA<br>1704856BZ<br>1704856SM<br>71704856 | **16-1/8** | 3/4 | 3/8 | 2-9/16 | 2.00/.203 | 0 | 1-1/8 | |

GROUP CONTINUES

B

# Blades - OEM Replacements

## Simplicity

GROUP CONTINUES

| | OREGON | OEM No. | Length | Center | Outer | C to C | W / T | Off | Lift | Prod. Code |
|---|---|---|---|---|---|---|---|---|---|---|
| (3) for 44" cut, 1600 & 1700 series, 2616H, Broadmoor, Conquest, GTG, GTH, Landlord, LTH, Prestige, Regent | **91-705** | 17027774<br>17027774SM<br>1704100<br>1704100A<br>1704100ASM<br>1704100BMA<br>1704100BZ<br>1704100SM<br>1716696<br>1716696A<br>1716696ASM<br>1716696SM | 16-1/8 | 3/4 | 3/8 | 2-9/16 | 2.00/.203 | 0 | 1-1/16 | |
| | | 1727774<br>1727774A<br>1727774ASM<br>1727774BMA<br>1727774BZ<br>1727774SM<br>71704100<br>71704100A | | | | | | | | |
| Gator® G3™ | **90-685** | | 16-1/8 | 3/4 | 3/8 | 2-9/16 | 2.50/.203 | 0 | 3/4 | G3 |
| Gator G5™ | **590-685** | | 16-1/8 | 3/4 | 3/8 | 2-9/16 | 3.00/.187 | 0 | 1 | High-Lift Xtended Fusion® G5 |
| (3) for 48" cut | **91-313** | 5101986S<br>5101986SYP | **16-1/4** | 5/8 | | | 2.50/.203 | 0 | 1 | |
| (3) for 48" cut | **91-183** | | 16-1/4 | 5/8 | | | 2.50/.250 | 0 | 1 | |
| (3) for 48" cut | **91-180** | | 16-1/4 | 5/8 | | | 2.50/.187 | 0 | 1 | |
| (3) for 48" cut | **99-127** | | 16-1/4 | 5/8 | | | 2.50/.203 | 0 | 1-1/16 | |
| (3) for 48" cut, mulching | **91-368** | | 16-1/4 | 5/8 | | | 2.50/.203 | 0 | 1 | Xtended |
| Gator G3 | **96-310** | | 16-1/4 | 5/8 | | | 2.50/.203 | 0 | 3/4 | G3 |
| Gator G5 | **596-310** | | 16-1/4 | 5/8 | | | 3.00/.203 | 0 | 1 | High-Lift Xtended Fusion® G5 |
| Gator G6® | **396-716** | | 16-1/4 | 5/8 | | | 3.00/.250 | 0 | 1 | Heavy-Duty High-Lift Xtended Fusion® G6 |
| Gator G6 (3) for 48" cut | **391-614** | 1759055YP | **16-1/2** | 3/4 | | | 3.00/.250 | 0 | 1 | Heavy-Duty High-Lift Xtended Fusion® G6 |

B

## Simplicity

| | OREGON | OEM No. | Length | Center | Outer | C to C | W / T | Off | Lift | Prod. Code |
|---|---|---|---|---|---|---|---|---|---|---|
| (3) for 48" cut | **91-606** | 1757303YP | **16-1/2** | 13/16 | | | 2.25/.149 | 0 | 5/8 | |
| Gator G6 | **391-606** | | 16-1/2 | 13/16 | | | 3.00/.250 | 0 | 1 | Heavy-Duty High-Lift Xtended Fusion® G6 |
| (3) for 48" cut, left-hand cut, large frame garden tractors 1987 & later | **91-703** | 1659916A<br>1659916ASM<br>1659916BMA<br>1659916BZ<br>1659916SM<br>1679916<br>1679916ASM<br>1679916BZYP<br>71679916 | **16-3/4** | 1 | | | 2.50/.203 | 9/16 | 1-1/8 | |
| (3) for 48" cut, 5200, 6100, 6200, 6500, FC & GT series | **91-715** | 1656146<br>1656146ASM<br>1656149A | **17** | 3/4 | 3/8 | 2-9/16 | 2.00/.187 | 0 | 1 | |
| (3) for 52" cut | **91-256** | 1756152AYP<br>1756152SYP | **18** | 5/8 | | | 2.50/.203 | 0 | 1 | Xtended |
| (2) for 36", (3) for 52" cut, high-lift | **91-623** | A48185 | 18 | 5/8 | | | 3.00/.203 | 0 | 1-1/2 | Xtended |
| (3) for 52" cut, low-lift | **91-235** | | 18 | 5/8 | | | 2.50/.250 | 0 | 7/8 | Xtended |
| (3) for 52" cut, mulching | **91-335** | 5103304SYP | 18 | 5/8 | | | 2.50/.203 | 0 | 1 | Xtended |
| (3) for 52" cut | **91-181** | | 18 | 5/8 | | | 2.50/.187 | 0 | 1 | Xtended |
| (3) for 52" cut | **91-312** | 5101756S<br>5101756SYP | 18 | 5/8 | | | 2.50/.203 | 0 | 1 | Xtended |
| (3) for 52" cut | **91-622** | | 18 | 5/8 | | | 2.50/.203 | 0 | 1 | Xtended |
| (3) for 52" cut | **91-637** | | 18 | 5/8 | | | 2.50/.203 | 0 | 1 | |

GROUP CONTINUES

GROUP CONTINUES

# Blades - OEM Replacements

## Simplicity

| | OREGON | OEM No. | Length | Center | Outer | C to C | W / T | Off | Lift | Prod. Code |
|---|---|---|---|---|---|---|---|---|---|---|
| | | | GROUP CONTINUES | | | | | | | |
| (3) for 52" cut | **94-053** | | 18 | 5/8 | | | 2.50/.250 | 0 | 1 | |
| (3) for 52" cut | **91-184** | | 18 | 5/8 | | | 2.50/.250 | 0 | 1 | |
| | | | | | | | Xtended | | | |
| Gator® G3™ | **96-344** | | 18 | 5/8 | | | 2.50/.203 | 0 | 3/4 | G3 |
| Gator G5™ | **596-344** | | 18 | 5/8 | | | 3.00/.203 | 0 | 1 | |
| | | | | | | | High-Lift Xtended Fusion® | | | G5 |
| Gator G6® | **396-726** | | 18 | 5/8 | | | 3.00/.250 | 0 | 1 | |
| | | | | | | | Heavy-Duty High-Lift Xtended Fusion® | | | G6 |
| (3) for 50" cut, fits large frame tractors | **91-706** | 1708229<br>1708229A<br>1708229ASM<br>1708229BMA<br>1708229BZ<br>1708229SM<br>1716697<br>1716697A<br>1716697ASM<br>1716697BMA<br>1716697BZ | **18-1/8** | 3/4 | 3/8 | 2-9/16 | 2.00/.203 | 0 | 1 | |
| | | 1716697SM<br>1726453<br>1726453A<br>1726453ASM<br>1726453BMA<br>1726453BZ<br>1726453BZYP<br>1726453SM | | | | | | | | |
| Gator G3 | **90-698** | 1721086<br>1721086A<br>1721086ASM | 18-1/8 | 3/4 | 3/8 | 2-9/16 | 2.50/.203 | 0 | 3/4 | G3 |
| Gator G5 | **590-698** | | 18-1/8 | 3/4 | 3/8 | 2-9-16 | 3.00/.187 | 0 | 1 | |
| | | | | | | | High-Lift Xtended Fusion® | | | G5 |
| Gator G6 | **390-698** | | 18-1/8 | 3/4 | 3/8 | 2-9/16 | 3.00/.250 | 0 | 1 | |
| | | | | | | | Heavy-Duty High-Lift Xtended Fusion® | | | G6 |
| (3) for 52" cut, 2620, 2724H, 2726H, Broadmoor, Champion 2652, Champion 2752, Conquest, MF2523, MF355X, MRZT26520, Prestige, Regent, Regent EX, ZT2752, ZT27460 | **99-133** | 1737252<br>1737252A<br>1737252AYP<br>1737252BM<br>1737252BMA<br>1737252BZ<br>1737252BZYP<br>1737252SM<br>1737252YP | **18-1/2** | 3/4 | | | 2.50/.203 | 0 | 1-1/8 | |

GROUP CONTINUES

## Simplicity

| | OREGON | OEM No. | Length | Center | Outer | C to C | W / T | Off | Lift | Prod. Code |
|---|---|---|---|---|---|---|---|---|---|---|
| Gator G3 | **96-133** | 11913<br>11914<br>11949<br>539118672<br>539118673 | 18-1/2 | 3/4 | | | 2.50/.203 | 0 | 3/4 | G3 |
| Gator G5 | **599-133** | | 18-1/2 | 3/4 | | | 3.00/.203 | 0 | 1 | G5 |
| | | | | | | | High-Lift Xtended Fusion® | | | |
| (2) for 36" cut, (1) 91-713 & (1) 91-714 for 36" cut bagger, 1036 Sprint, 3110, 4108, 4111, 4208, 4211, 5116, 6008, 6108, 608LT, 608LTD, 611LT, 616SPL, 808GT | **91-713** | 1653975<br>1656043<br>1657589<br>1657589A<br>1657589ASM<br>1657589SM<br>71657589 | **18-1/2** | 3/4 | 3/8 | 2-9/16 | 2.00/.187 | 0 | 3/4 | |
| (2) for 36" cut, (High-lift bagging version of 91-713), 1036 Sprint, 3110, 4108, 4111, 4208, 4211, 5116, 6008, 6108, 608LT, 608LTD, 611LT, 616SPL, 808GT | **91-714** | 1671593<br>1671593A<br>1671593ASM<br>1671593SM<br>71671593 | 18-1/2 | 3/4 | 3/8 | 2-9/16 | 2.50/.164 | 0 | 1-5/16 | |
| (1) 91-615 & (2) 91-616 for 54" cut | **91-616** | 1687017<br>1687017SM<br>1736043<br>1736043A<br>1736043AYP<br>1736043BM<br>1736043BMA<br>1736043BMYP<br>1736043BZ | **20-9/16** | 1 | 3/8 | 2-9/16 | 2.50/.203 | 0 | 1-1/4 | |
| Gator G3 | **96-398** | 1725921<br>1725921A<br>1725921ASM<br>1725921SM | 20-9/16 | 1 | 3/8 | 2-9/16 | 2.50/.203 | 0 | 1 | G3 |
| (3) for 61" cut | **91-626** | 5022808ASM | **21** | 5/8 | | | 2.50/.203 | 0 | 1 | |
| (3) for 61" cut | **91-209** | | 21 | 5/8 | | | 2.50/.250 | 0 | 1 | |
| | | | | | | | Xtended | | | |
| (3) for 61" cut | **91-628** | | 21 | 5/8 | | | 3.00/.203 | 0 | 1-1/2 | |
| | | | | | | | Xtended | | | |
| (3) for 61" cut | **91-308** | 5104045SYP | 21 | 5/8 | | | 2.50/.203 | 0 | 1 | |

GROUP CONTINUES

# Blades - OEM Replacements

## Simplicity

| | OREGON | OEM No. | Length | Center | Outer | C to C | W / T | Off | Lift | Prod. Code |
|---|---|---|---|---|---|---|---|---|---|---|
| | | | GROUP CONTINUES | | | | | | | |
| (3) for 61" cut | **93-008** | | 21 | 5/8 | 1/4 | 1-5/8 | 2.50/.250 | 0 | 1-3/16 | Xtended |
| (3) for 61" cut | **95-078** | | 21 | 5/8 | | | 2.50/.250 | 0 | 1 | |
| (3) for 61" cut, mulching | **91-596** | | 21 | 5/8 | | | 2.50/.203 | 0 | 1 | |
| Gator® G3™ | **96-347** | | 21 | 5/8 | | | 2.50/.203 | 0 | 3/4 | G3 |
| Gator G5™ | **596-347** | | 21 | 5/8 | | | 3.00/.203 | 0 | 1 | High-Lift Xtended Fusion® G5 |
| Gator G6® | **396-727** | | 21 | 5/8 | | | 3.00/.250 | 0 | 1 | Heavy-Duty High-Lift Xtended Fusion® G6 |
| (2) for 42" cut | **91-610** | 1731898<br>1731898A<br>1731898ASM<br>1731898BMA<br>1731898BZ<br>1731898BZYP | **21-3/16** | 1 | | | 2.25/.149 | 7/16 | 1 | |
| Gator G6 | **391-610** | | 21-3/16 | 1 | | | 3.00/.250 | 7/16 | 1 | Heavy-Duty High-Lift Xtended Fusion® G6 |
| (2) for 42" cut | **91-605** | 1737816<br>1737816BM<br>1737816BMA<br>1737816BMYP<br>1737816BZ<br>1737816SM<br>1737816YP | **21-3/16** | 13/16 | | | 2.25/.149 | 7/16 | 13/16 | |
| Gator G6 | **391-605** | | 21-3/16 | 13/16 | | | 3.00/.250 | 7/16 | 1 | Heavy-Duty High-Lift Xtended Fusion® G6 |
| (2) for 42" cut | **91-607** | 1758878BMYP | **21-5/16** | 13/16 | | | 2.25/.149 | 0 | 5/8 | |
| Gator G6 | **391-607** | | 21-5/16 | 13/16 | | | 3.00/.250 | 0 | 1 | Heavy-Duty High-Lift Xtended Fusion® G6 |

B

## Simplicity

| | OREGON | OEM No. | Length | Center | Outer | C to C | W / T | Off | Lift | Prod. Code |
|---|---|---|---|---|---|---|---|---|---|---|
| | **99-134** | 7100851A<br>7100851AYP<br>7100851BM<br>7100851BMYP<br>7100851BZ | **21-5/8** | 3/8 | 3/8 | 1-7/8 | 2.25/.134 | 1/4 | 1-1/8 | |
| <br>(1) 91-701 & (1) 91-723 for 38" cut, LT8 series | **91-701** | 1704101<br>1704101A<br>1704101ASM<br>1704101BM<br>1704101BMA<br>1704101BZ<br>1704101SM<br>1716695<br>1716695A<br>1716695ASM<br>1716695SM<br>71704101 | **22-1/4** | 3/4 | 3/8 | 2-9/16 | 2.00/.203 | 0 | 1-1/16 | |
| <br>Gator® G3™ | **96-654** | | 22-1/4 | 3/4 | 3/8 | 2-9/16 | 2.50/.203 | 0 | 3/4 | G3 |
| <br>(3) for 72" cut | **91-609** | | **25** | 5/8 | | | 2.50/.250 | 0 | 1 | |
| <br>Gator G6® | **396-731** | 5102227S<br>5102227SYP | 25 | 5/8 | | | 3.00/.250 | 0 | 1 | Heavy-Duty High-Lift Xtended Fusion® G6 |

## Snapper

| | | | | | | | | | | |
|---|---|---|---|---|---|---|---|---|---|---|
| <br>(3) for 42" cut, low-lift, ZTR | **91-557** | 7079215<br>7079221<br>7079221BM<br>7079221YP<br>79215<br>79221 | **15** | 1/2 | | | 2.50/.250 | 5/16 | 3/4 | |
| 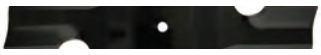 <br>(3) for 42" cut, high-lift, ZTR | **91-536** | | 15 | 1/2 | | | 2.50/.250 | 5/16 | 1 | |
| <br>(3) for 42" cut, high-lift, ZTR | **92-150** | | 15 | 1/2 | | | 2.50/.203 | 5/16 | 1-1/4 | |
| <br>Gator G3 | **96-343** | | 15 | 1/2 | | | 2.50/.203 | 5/16 | 1 | Xtended G3 |
| <br>Gator G6 | **396-713** | | 15 | 1/2 | | | 3.00/.250 | 5/16 | 1 | Heavy-Duty High-Lift Xtended Fusion® G6 |

B

# Blades - OEM Replacements

## Snapper

| | OREGON | OEM No. | Length | Center | Outer | C to C | W / T | Off | Lift | Prod. Code |
|---|---|---|---|---|---|---|---|---|---|---|
| | | | GROUP CONTINUES | | | | | | | |
| | **92-146** | 1656147A | **15-5/16** | 3/4 | 3/8 | 2-9/16 | 2.00/.187 | 0 | 1 | |
| (1) 91-615 & (2) 91-616 for 54" cut | **91-615** | 1687016<br>1687016SM<br>1687398<br>1722090<br>1722090A<br>1736044<br>1736044A<br>1736044AYP | **16** | 1 | 3/8 | 2-9/16 | 2.50/.203 | 0 | 1-1/4 | |
| (3) for 46" & 52" cut, 150, 200Z, 285Z, 300Z, 355Z, LT125, LT200, NXT200, RZT, SPX, ZT, ZTR | **99-132** | 1737228<br>1737228AYP<br>1737228BZYP | **16-1/8** | 3/4 | | | 2.50/.203 | 0 | 1-1/16 | |
| Gator® G5™ | **599-132** | 1739889<br>1739889A<br>1739889AYP<br>1739889BM<br>1739889BMA<br>179889BZ | 16-1/8 | 3/4 | | | 3.00/.203 | 0 | 1 | High-Lift Xtended Fusion® G5 |
| | **91-723** | 1704856<br>1704856A<br>1704856ASM<br>1704856BMA<br>1704856BZ | **16-1/8** | 3/4 | 3/8 | 2-9/16 | 2.00/.203 | 0 | 1-1/8 | |
| (3) for 44" cut, 355Z, 360Z, 400Z, ACS, Fastcut, LT200, LT300, RMO, RZT, YT400 | **91-705** | 17027774<br>1704100<br>1704100A<br>1704100BMA<br>1704100BZ<br>1716696<br>1716696A<br>1716696ASM<br>1716696SM<br>1727774<br>1727774A<br>1727774BMA<br>1727774BZ | 16-1/8 | 3/4 | 3/8 | 2-9/16 | 2.00/.203 | 0 | 1-1/16 | |
| Gator G3™ | **90-685** | | 16-1/8 | 3/4 | 3/8 | 2-9/16 | 2.50/.203 | 0 | 3/4 | G3 |
| Gator G5 | **590-685** | | 16-1/8 | 3/4 | 3/8 | 2-9/16 | 3.00/.187 | 0 | 1 | High-Lift Xtended Fusion® G5 |
| (3) for 48" cut, series 2 decks | **91-180** | 7076675<br>76675 | **16-1/4** | 5/8 | | | 2.50/.187 | 0 | 1 | |
| (3) for 48" cut, heavy-duty | **91-183** | | 16-1/4 | 5/8 | | | 2.50/.250 | 0 | 1 | |

GROUP CONTINUES

## Snapper

| | OREGON | OEM No. | Length | Center | Outer | C to C | W / T | Off | Lift | Prod. Code |
|---|---|---|---|---|---|---|---|---|---|---|
| (3) for 48" cut | **91-313** | 5101986<br>5101986BM<br>5101986BMYP<br>5101986S<br>5101986SYP<br>5101986YP | 16-1/4 | 5/8 | | | 2.50/.203 | 0 | 1 | |
| (2) for 32" cut, (3) for 48" cut, commercial-series 2 decks | **99-127** | 7014036BMI<br>7014036BMYP<br>7014036YP<br>7017036BM<br>7017036BMI<br>7077377 | 16-1/4 | 5/8 | | | 2.50/.203 | 0 | 1-1/16 | |
| (3) for 48" cut | **91-368** | 5103303S<br>5103303SX2<br>5103303SYP | 16-1/4 | 5/8 | | | 2.50/.203 | 0 | 1 | Xtended |
| Gator® G3™ | **96-310** | | 16-1/4 | 5/8 | | | 2.50/.203 | 0 | 3/4 | G3 |
| Gator G5™ | **596-310** | | 16-1/4 | 5/8 | | | 3.00/.203 | 0 | 1 | High-Lift Xtended Fusion® G5 |
| Gator G6® | **396-716** | | 16-1/4 | 5/8 | | | 3.00/.250 | 0 | 1 | Heavy-Duty High-Lift Xtended Fusion® G6 |
| (3) for 48" cut | **91-606** | 1757303<br>1757303BM<br>1757303YP | **16-1/2** | 13/16 | | | 2.25/.149 | 0 | 5/8 | |
| Gator G6 | **391-606** | | 16-1/2 | 13/16 | | | 3.00/.250 | 0 | 1 | Heavy-Duty High-Lift Xtended Fusion® G6 |
| (3) for 48" cut, commercial, model PMA480, Pro Series 0, Pro 7 Series 0,1,2,4 | **99-126** | 17043<br>7017043<br>7017043YP<br>7075771<br>7075771BMA<br>7075771BZ<br>7075771BZYP | **16-1/2** | 5/8 | | | 2.50/.203 | 0 | 1-1/16 | |
| (3) for 48" cut, high-lift, commercial, model PMA480, Pro Series 0, Pro 7 Series 0,1,2,4 | **91-621** | | 16-1/2 | 5/8 | | | 3.00/.203 | 0 | 1-1/2 | |
| (3) for 48" cut, low-lift, commercial, model PMA480, Pro Series 0, Pro 7 Series 0,1,2,4 | **92-207** | | 16-1/2 | 5/8 | | | 2.50/.203 | 0 | 13/16 | Xtended |

GROUP CONTINUES

# Blades - OEM Replacements

## Snapper

| | OREGON | OEM No. | Length | Center | Outer | C to C | W / T | Off | Lift | Prod. Code |
|---|---|---|---|---|---|---|---|---|---|---|
| | | | GROUP CONTINUES | | | | | | | |
| (3) for 48" cut, mulching, commercial, model PMA480, Pro Series 0, Pro 7 Series 0,1,2,4 | **92-737** | | 16-1/2 | 5/8 | | | 2.50/.203 | 0 | 1-1/16 | Xtended |
| (3) for 48" cut, commercial, model PMA480, Pro Series 0, Pro 7 Series 0,1,2,4 | **91-620** | | 16-1/2 | 5/8 | | | 2.50/.203 | 0 | 1 | Xtended |
| (3) for 48" cut, commercial, model PMA480, Pro Series 0, Pro 7 Series 0,1,2,4 | **92-036** | | 16-1/2 | 5/8 | | | 2.50/.250 | 0 | 1 | |
| (3) for 48" cut, commercial, model PMA480, Pro Series 0, Pro 7 Series 0,1,2,4 | **92-145** | | 16-1/2 | 5/8 | | | 2.50/.203 | 0 | 1 | |
| (3) for 48" cut, commercial, model PMA480, Pro Series 0, Pro 7 Series 0,1,2,4 | **92-743** | | 16-1/2 | 5/8 | | | 2.50/.203 | 0 | 1 | Xtended |
| Gator® G3™ | **96-308** | | 16-1/2 | 5/8 | | | 2.50/.203 | 0 | 1 | G3 |
| Gator G5™ | **596-308** | | 16-1/2 | 5/8 | | | 3.00/.203 | 0 | 1 | High-Lift Xtended Fusion® G5 |
| Gator G6® | **396-735** | | 16-1/2 | 5/8 | | | 3.00/.250 | 0 | 1 | Heavy-Duty High-Lift Xtended Fusion® G6 |
| Gator G6 (3) for 48" cut, 150, 360Z | **391-614** | 175303<br>175303YP<br>1759055<br>1759055YP | **16-1/2** | 3/4 | | | 3.00/.250 | 0 | 1 | Heavy-Duty High-Lift Xtended Fusion® G6 |
| (3) for 48" cut, high-lift, ZTR | **91-123** | 7079388<br>79388 | **16-15/16** | 1/2 | | | 2.50/.203 | 5/16 | 1-5/16 | |
| (3) for 48" cut, low-lift, ZTR | **91-126** | 7079369<br>7079369BM<br>7079369YP<br>79369 | 16-15/16 | 1/2 | | | 2.50/.203 | 5/16 | 3/4 | |
| Gator G3 | **99-617** | | 16-15/16 | 1/2 | | | 2.50/.203 | 5/16 | 3/4 | G3 |

B

## Snapper

| | OREGON | OEM No. | Length | Center | Outer | C to C | W / T | Off | Lift | Prod. Code |
|---|---|---|---|---|---|---|---|---|---|---|
| (2) for 36" cut, (3) for 52" cut, Series 2 decks, Pro Series 0, Pro 7 series 0,1,2,4 | **91-181** | 17037<br>7017037<br>7075751<br>7075751BMA<br>7075751BZ<br>7075751BZYP<br>7076450<br>7077344<br>76450<br>77344 | **18** | 5/8 | | | 2.50/.187 | 0 | 1 | Xtended |
| (2) for 36" cut, (3) for 52" cut, high-lift, Series 2 decks, Pro Series 0, Pro 7 series 0,1,2,4 | **91-623** | | 18 | 5/8 | | | 3.00/.203 | 0 | 1-1/2 | Xtended |
| (2) for 36" cut, (3) for 52" cut, low-lift, Series 2 decks, Pro Series 0, Pro 7 series 0,1,2,4 | **91-235** | | 18 | 5/8 | | | 2.50/.250 | 0 | 7/8 | Xtended |
| (2) for 36" cut, (3) for 52" cut, mulching, Series 2 decks, Pro Series 0, Pro 7 series 0,1,2,4 | **91-335** | 5103304S<br>5103304SYP<br>5103304X2 | 18 | 5/8 | | | 2.50/.203 | 0 | 1 | Xtended |
| (2) for 36" cut, (3) for 52" cut, mulching, Series 2 decks, Pro Series 0, Pro 7 series 0,1,2,4 | **91-256** | 1756152SYP | 18 | 5/8 | | | 2.50/.203 | 0 | 1 | Xtended |
| (2) for 36" cut, (3) for 52" cut, Series 2 decks, Pro Series 0, Pro 7 series 0,1,2,4 | **91-312** | 5101756S<br>5101756SYP<br>5101756X2 | 18 | 5/8 | | | 2.50/.203 | 0 | 1 | Xtended |
| (2) for 36" cut, (3) for 52" cut, Series 2 decks, Pro Series 0, Pro 7 series 0,1,2,4 | **91-622** | | 18 | 5/8 | | | 2.50/.203 | 0 | 1 | Xtended |
| (2) for 36" cut, (3) for 52" cut, Series 2 decks, Pro Series 0, Pro 7 series 0,1,2,4 | **91-637** | | 18 | 5/8 | | | 2.50/.203 | 0 | 1 | |
| (2) for 36" cut, (3) for 52" cut, Series 2 decks, Pro Series 0, Pro 7 series 0,1,2,4 | **94-053** | | 18 | 5/8 | | | 2.50/.250 | 0 | 1 | |
| (2) for 36" cut, (3) for 52" cut, heavy-duty, Series 2 decks, Pro Series 0, Pro 7 series 0,1,2,4 | **91-184** | | 18 | 5/8 | | | 2.50/.250 | 0 | 1 | Xtended |

GROUP CONTINUES

# Blades - OEM Replacements

## Snapper

| | OREGON | OEM No. | Length | Center | Outer | C to C | W / T | Off | Lift | Prod. Code |
|---|---|---|---|---|---|---|---|---|---|---|
| | | | GROUP CONTINUES | | | | | | | |
| Gator® G3™ | **96-344** | | 18 | 5/8 | | | 2.50/.203 | 0 | 3/4 | G3 |
| Gator G5™ | **596-344** | | 18 | 5/8 | | | 3.00/.203 | 0 | 1 | High-Lift Xtended Fusion® G5 |
| Gator G6® | **396-726** | | 18 | 5/8 | | | 3.00/.250 | 0 | 1 | Heavy-Duty High-Lift Xtended Fusion® G6 |
| (3) for 50" cut, 1695141, 1695418, 1695588, (CSC2650) (SC2450) (SC2650) (ZT2450) 150Z, (LT18500) (LT2250) LT200, (RZT22500BVE2 (7800011 & 7800153)) RZT, YT1850, YT2050, (YT2350) (YT23500 (2690752)) (YT2250 (1694627)) (YT22500 (2690269)) YT400 | **91-706** | 1708229<br>1708229A<br>1708229ASM<br>1708229BMA<br>1716697<br>1716697A<br>1716697ASM<br>1716697BMA<br>1716697BZ<br>1716697SM | **18-1/8** | 3/4 | 3/8 | 2-9/16 | 2.00/.203 | 0 | 1 | |
| | | | | | | | | | | 1726453<br>1726453A<br>1726453ASM<br>1726453BMA<br>1726453BZ<br>1726453BZP<br>1726453BZYP |
| Gator G3 | **90-698** | 1721086<br>1721086A<br>1721086ASM | 18-1/8 | 3/4 | 3/8 | 2-9/16 | 2.50/.203 | 0 | 3/4 | G3 |
| Gator G5 | **590-698** | | 18-1/8 | 3/4 | 3/8 | 2-9-16 | 3.00/.187 | 0 | 1 | High-Lift Xtended Fusion® G5 |
| Gator G6 | **390-698** | | 18-1/8 | 3/4 | 3/8 | 2-9/16 | 3.00/.250 | 0 | 1 | Heavy-Duty High-Lift Xtended Fusion® G6 |
| (3) for 52" cut, 150, 150Z, 285Z, 300Z, 365Z, LT125, LT200, LT300, NXT200, RMO, RZT, SPX, YT400, ZT, ZTR | **99-133** | 1737252<br>1737252A<br>1737252AYP<br>1737252BM<br>1737252BMA<br>1737252BZ<br>1737252BZYP<br>1737252YP | **18-1/2** | 3/4 | | | 2.50/.203 | 0 | 1-1/8 | |
| Gator G3 | **96-133** | 11913<br>11914<br>11949<br>539118672<br>539118673 | 18-1/2 | 3/4 | | | 2.50/.203 | 0 | 3/4 | G3 |
| Gator G5 | **599-133** | | 18-1/2 | 3/4 | | | 3.00/.203 | 0 | 1 | High-Lift Xtended Fusion® G5 |

B

## Snapper

| | OREGON | OEM No. | Length | Center | Outer | C to C | W / T | Off | Lift | Prod. Code |
|---|---|---|---|---|---|---|---|---|---|---|
| | **91-713** | 1657589A | **18-1/2** | 3/4 | 3/8 | 2-9/16 | 2.00/.187 | 0 | 3/4 | |
| | **91-714** | 1671593A | 18-1/2 | 3/4 | 3/8 | 2-9/16 | 2.50/.164 | 0 | 1-5/16 | |
| Gator G3 | **99-614** | 24466<br>42998<br>7024466<br>7042998<br>7042998BMA<br>7042998BZ<br>7042998BZYP | **19-7/16** | 1 | | | 2.50/.203 | 3/16 | 3/4 | G3 |
| (1) 91-615 & (2) 91-616 for 54" cut | **91-616** | 1687017<br>1687017SM<br>1736043<br>1736043A<br>1736043AYP<br>1736043BM | **20-9/16** | 1 | 3/8 | 2-9/16 | 2.50/.203 | 0 | 1-1/4 | |
| | | | | | | | | | | |
| Gator G3 | **96-398** | 1725921<br>1725921A<br>1725921ASM<br>1725921AYP<br>1725921SM | 20-9/16 | 1 | 3/8 | 2-9/16 | 2.50/.203 | 0 | 1 | G3 |
| 21" cut, walk-behind, steel deck | **99-103** | 17002<br>26691<br>7017002<br>7026691<br>7026691BZYP<br>702669BMA | **20-11/16** | 3/8 | 3/8 | 2-3/4 | 2.75/.164 | 3/16 | 1 | |
| | | | | | | | | | | |
| 21" cut walk-behind, (2) for 41" cut tractor, punched for high-lift deflector 79-732 | **99-107** | 19795<br>7019795BMA<br>7019795BZ<br>7019795BZYP<br>7019795YP | 20-11/16 | 3/8 | 3/8 | 2-3/4 | 2.75/.164 | 3/16 | 1 | |
| 21" cut, recycler | **99-121** | 17168<br>7017086<br>7017168<br>7026407<br>7026407AYP<br>7041939 | 20-11/16 | 3/8 | 3/8 | 2-3/4 | 2.75/.164 | 3/16 | 1-1/4 | |
| | | | | | | | | | | |
| Gator G3 | **96-620** | | 20-11/16 | 3/8 | 3/8 | 2-3/4 | 2.75/.164 | 3/16 | 3/4 | G3 |

B

# Blades - OEM Replacements

## Snapper

| | OREGON | OEM No. | Length | Center | Outer | C to C | W / T | Off | Lift | Prod. Code |
|---|---|---|---|---|---|---|---|---|---|---|
| | **99-119** | 7100242<br>7100242A<br>7100242AYP<br>7100242BM<br>7100242BMA<br>7100242BZ<br>7100242BZYP<br>7100242ZZZZ | **20-11/16** | 3/8 | | | 2.50/.149 | 3/8 | 1-1/8 | |
| <br>21" cut walk-behind | **98-007** | | **20-15/16** | 13/16 | 3/8 | 2-1/2 | 2.25/.134 | 5/16 | 15/16 | |
| <br>Gator® G3™ | **98-102** | 7026428<br>7026428BMA<br>7026428BZ<br>7026428BZYP | 20-15/16 | 13/16 | 3/8 | 2-1/2 | 2.50/.134 | 5/16 | 3/4 | G3 |
| <br>(3) for 60" cut, high-lift, ZTR | **91-128** | 7079371<br>7079371BM<br>7079371BMYP<br>7079371YP<br>79371 | **20-15/16** | 1/2 | | | 2.50/.203 | 5/16 | 1-1/4 | |
| <br>(3) for 60" cut, low-lift, ZTR | **91-127** | 7079222<br>79222 | 20-15/16 | 1/2 | | | 2.50/.203 | 5/16 | 3/4 | |
| <br>Gator G3 | **99-615** | | 20-15/16 | 1/2 | | | 2.50/.203 | 5/16 | 3/4 | G3 |
| <br>(3) for 61" cut | **91-308** | 17081<br>5104045SYP<br>7017081<br>7073396<br>7073396YP<br>7075770 | **21**<br><br>7075770BMA<br>7075770BZ<br>7075770YP<br>75770 | 5/8 | | | 2.50/.203 | 0 | 1 | |
| <br>(3) for 61" cut, high-lift | **91-628** | | 21 | 5/8 | | | 3.00/.203<br>Xtended | 0 | 1-1/2 | |
| <br>(3) for 61" cut, mulching | **91-596** | | 21 | 5/8 | | | 2.50/.203 | 0 | 1 | |
| <br>(3) for 61" cut | **91-209** | | 21 | 5/8 | | | 2.50/.250<br>Xtended | 0 | 1 | |
| <br>(3) for 61" cut | **91-626** | | 21 | 5/8 | | | 2.50/.203 | 0 | 1 | |
| <br>(3) for 61" cut | **91-638** | | 21 | 5/8 | | | 2.50/.203 | 0 | 1 | |

GROUP CONTINUES

B

## Snapper

| OREGON | OEM No. | Length | Center | Outer | C to C | W / T | Off | Lift | Prod. Code |
|---|---|---|---|---|---|---|---|---|---|
| | | GROUP CONTINUES | | | | | | | |
| **93-008** | | 21 | 5/8 | 1/4 | 1-5/8 | 2.50/.250 | 0 | 1-3/16 | |
| | | | | | | Xtended | | | |
| (3) for 61" cut | | | | | | | | | |
| **95-078** | | 21 | 5/8 | | | 2.50/.250 | 0 | 1 | |
| (3) for 61" cut | | | | | | | | | |
| **96-347** | 5103305S | 21 | 5/8 | | | 2.50/.203 | 0 | 3/4 | G3 |
| Gator® G3™ | | | | | | | | | |
| **596-347** | | 21 | 5/8 | | | 3.00/.203 | 0 | 1 | |
| | | | | | | High-Lift Xtended Fusion® | | | G5 |
| Gator G5™ | | | | | | | | | |
| **396-727** | | 21 | 5/8 | | | 3.00/.250 | 0 | 1 | |
| | | | | | | Heavy-Duty High-Lift Xtended Fusion® | | | G6 |
| Gator G6® | | | | | | | | | |
| **195-032** | 704429 | **21** | 5 pt. Star | 5/16 | 3-1/8 | 2.25/.149 | 1/8 | 1-1/16 | |
| | | | | | | Xtended | | | 100 |
| (2) for 42" cut | | | | | | | | | |
| **195-039** | | 21 | 5 pt. Star | 5/16 | 3-1/8 | 2.25/.187 | 1/8 | 1-1/18 | |
| | | | | | | Xtended | | | 100 |
| (2) for 42" cut, heavy-duty version of195-032 | | | | | | | | | |
| **195-048** | | 21 | 5 pt. Star | 5/16 | 3-1/8 | 2.25/.187 | 0 | 3/4 | |
| | | | | | | Xtended | | | 100 |
| (2) for 42" cut, sand | | | | | | | | | |
| **195-005** | | 21 | 5 pt. Star | | | 2.25/.134 | 1/8 | 7/8 | |
| | | | | | | Xtended | | | 100 |
| (2) for 42" cut, mulching | | | | | | | | | |
| **195-019** | | 21 | 5 pt. Star | | | 2.25/.149 | 1/8 | 15/16 | |
| | | | | | | Xtended | | | 100 |
| (2) for 42" cut, mulching, heavy-duty version of 195-005 | | | | | | | | | |
| **96-900** | | 21 | 5 pt. Star | | | 2.50/.187 | 0 | 3/4 | G3 |
| Gator G3 | | | | | | | | | |
| **596-900** | | 21 | 5 pt. Star | | | 3.00/.164 | 0 | 1 | |
| | | | | | | High-Lift Xtended Fusion® | | | G5 |
| Gator G5 | | | | | | | | | |
| **198-049** | 703371 | **21** | bow-tie | 5/16 | 2-1/2 | 2.25/.134 | 1/4 | 15/16 | |
| | | | | | | Xtended | | | 100 |
| 21" walk-behind, mulching | | | | | | | | | |
| **98-098** | | 21 | bow-tie | 5/16 | 2-1/2 | 2.25/.134 | 1/4 | 13/16 | |
| 21" walk-behind | | | | | | | | | |

GROUP CONTINUES

B

# Blades - OEM Replacements

## Snapper

| | OREGON | OEM No. | Length | Center | Outer | C to C | W / T | Off | Lift | Prod. Code |
|---|---|---|---|---|---|---|---|---|---|---|
| | | | GROUP ↑ CONTINUES | | | | | | | |
| Gator® G3™ | **98-631** | | 21 | bow-tie | 5/16 | 2-1/2 | 2.50/.187 | 5/16 | 3/4 | G3 |
| Gator G5™ | **598-631** | | 21 | bow-tie | 5/16 | 2-1/2 | 3.00/.149 | 5/16 | 1 | High-Lift Xtended Fusion® G5 |
| (2) for 42" cut | **91-605** | 1737816<br>1737816BM<br>1737816BMA<br>1737816BMYP<br>1737816BZ<br>1737816SM<br>1737816YP | **21-3/16** | 13/16 | | | 2.25/.149 | 7/16 | 13/16 | |
| Gator G6® | **391-605** | | 21-3/16 | 13/16 | | | 3.00/.250 | 7/16 | 1 | Heavy-Duty High-Lift Xtended Fusion® G6 |
| (2) for 42" cut | **91-610** | 1731898<br>1731898A<br>1731898ASM<br>1731898BMA<br>1731898BZ<br>1731898BZYP | **21-3/16** | 1 | | | 2.25/.149 | 7/16 | 1 | |
| Gator G6 | **391-610** | | 21-3/16 | 1 | | | 3.00/.250 | 7/16 | 1 | Heavy-Duty High-Lift Xtended Fusion® G6 |
| (2) for 42" cut | **91-607** | 1758878BMYP | **21-5/16** | 13/16 | | | 2.25/.149 | 0 | 5/8 | |
| Gator G6 | **391-607** | | 21-5/16 | 13/16 | | | 3.00/.250 | 0 | 1 | Heavy-Duty High-Lift Xtended Fusion® G6 |
| 22" cut, 6.5GT, 6.75GT | **99-134** | 7100851<br>7100851A<br>7100851AYP<br>7100851BM<br>7100851BMA<br>7100851BMYP<br>7100851BZ<br>721865 | **21-5/8** | 3/8 | 3/8 | 1-7/8 | 2.25/.134 | 1/4 | 1-1/8 | |
| (1) for 22" cut, walk-behind | **91-611** | 7103288<br>7103288BM<br>7103288BMA<br>7103288BZ<br>7103288YP | **22** | 3/8 | 3/8 | 2-3/4 | 2.25/.164 | 3/16 | 1-1/4 | Xtended |
| Gator® G5™ | **591-611** | | 22 | 3/8 | 3/8 | 2-3/4 | 3.00/.134 | 5/16 | 1 | High-Lift Xtended Fusion® G5 |

B

## Snapper

| | OREGON | OEM No. | Length | Center | Outer | C to C | W / T | Off | Lift | Prod. Code |
|---|---|---|---|---|---|---|---|---|---|---|
| (2) for 46" cut | **195-070** | 704425 | **22-7/8** | 5 pt. Star | 5/16 | 3-15/16 | 2.75/.164 | 5/16 | 1-1/8 | Xtended — 100 |
| (2) for 46" cut, mulching | **95-074** | | 22-7/8 | 5 pt. Star | | | 2.25/.149 | 1/8 | 15/16 | Xtended |
| Gator G3™ | **96-370** | | 22-7/8 | 5 pt. Star | | | 2.75/.187 | 1/4 | 3/4 | Xtended — G3 |
| Gator G5 | **596-370** | | 22-7/8 | 5 pt. Star | | | 3.00/.187 | 5/16 | 1 | High-Lift Xtended Fusion® — G5 |
| (3) for 72" cut | **91-609** | 5102227S | **25** | 5/8 | | | 2.50/.250 | 0 | 1 | |
| Gator G6® | **396-731** | 7046625<br>7046625BM<br>7046625BMYP<br>7046625YP | 25 | 5/8 | | | 3.00/.250 | 0 | 1 | Heavy-Duty High-Lift Xtended Fusion® — G6 |
| 28" cut, rear engine rider, punched for high-lift deflector 79-728 | **99-113** | 19515<br>7019515<br>7019515BMA<br>7019515BZ<br>7019515BZYP | **28** | 1-1/16 | 1/2 | 7-1/2 | 2.75/.164 | 1/4 | 13/16 | |
| 28" cut, rear engine rider, no deflector holes | **99-131** | 7104196<br>7104196BM<br>7104196BMA<br>7104196BZ<br>7104196BZYP<br>7104196YP | 28 | 1-1/16 | 1/2 | 7-1/2 | 2.75/.164 | 1/4 | 13/16 | |
| 28" cut, rear engine rider, heavy-duty, punched for high-lift deflector 79-728 | **99-114** | | 28 | 1-1/16 | 1/2 | 7-1/2 | 2.75/.187 | 1/4 | 13/16 | |
| Gator® G3™ | **96-628** | 7016980<br>7016980BMA<br>7016980BZ<br>7016980BZYP<br>7026453<br>7035635<br>71040383 | 28 | 1-1/16 | 1/2 | 7-1/2 | 2.75/.187 | 1/4 | 3/4 | G3 |
| | | | | | | | | | | 71040383BM<br>71040383BZYP<br>7104083BMA<br>7104083BZ<br>7104083BZYP |
| Gator® G5™ | **596-628** | | 28 | 1-1/16 | 1/2 | 7-1/2 | 3.00/.187 | 5/16 | 1 | High-Lift Xtended Fusion® — G5 |

# Blades - OEM Replacements

## Snapper

| | OREGON | OEM No. | Length | Center | Outer | C to C | W / T | Off | Lift | Prod. Code |
|---|---|---|---|---|---|---|---|---|---|---|
| 30" cut, rear engine rider, punched for high-lift deflector 79-724 | **99-112** | 18069<br>7018069<br>7018069BMA<br>7018069BZ<br>7018069BZYP | **30** | 1-1/16 | 1/2 | 7-1/2 | 2.75/.187 | 1/4 | 13/16 | |
| Gator G3 | **96-630** | 7026565<br>7026565BM<br>7026565BMA<br>7026565BZ<br>7026565BZYP<br>7026565YP | 30 | 1-1/16 | 1/2 | 7-1/2 | 2.75/.187 | 1/16 | 3/4 | G3 |
| 33" cut, rear engine riders, punched for high-lift deflector 79-728 | **99-117** | 19523<br>7019523<br>7019523BMA<br>7019523BZ<br>7019523BZYP<br>7019523YP | **32-7/8** | 1-1/16 | 1/2 | 7-1/2 | 2.75/.187 | 1/4 | 1 | |
| Gator G3 | **96-633** | 7016982<br>7016982BMA<br>7016982BZ<br>7024741<br>7024741A<br>7024741AYP<br>7024741BMA<br>7024741BZ | 32-7/8<br>7034168<br>7034168BMA<br>7034168BZ<br>7034168BZYP<br>7034185YP | 1-1/16 | 1/2 | 7-1/2 | 2.75/.187 | 1/4 | 3/4 | G3 |
| 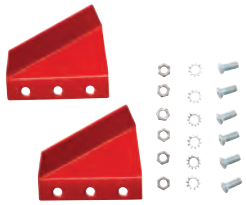 contains (2) 3 hole deflectors, (6) starlock washers, (6) 5/16-24 x 21/32 Grade #5, Oval head screws, (6) hex nuts. Fits 28" & 33" blades | **79-728** | 3-7723<br>Air lift set | **4** | | | | | | | |
| Air lift set contains (2) deflectors, (4) starlock washers, (4) 5/16-24 x 21/32 Grade #5, Oval head screws, (4) hex nuts. Fits 28" & 33" blades | **79-724** | 3-1724 | **5-5/8** | | | | | | | |

B


Can't find what you're looking for?
Try us online to search the latest products available.

OregonProducts.com

## Spartan

| OREGON | OEM No. | Length | Center | Outer | C to C | W / T | Off | Lift | Prod. Code |
|---|---|---|---|---|---|---|---|---|---|
| **93-011** | 438-0002-00 | **21** | 5/8 | | | 2.50/.250 | 1/2 | 1-1/8 | |
| (3) for 61" cut, RT and SRT | | | | | | Xtended | | | |
| **93-013** | | 21 | 5/8 | | | 2.50/.250 | 1/2 | 5/8 | |
| (3) for 61" cut, low-lift, RT and SRT | | | | | | Xtended | | | |
| **596-702** | | 21 | 5/8 | | | 3.00/.203 | 1/2 | 1 | |
| Gator® G5™ | | | | | | High-Lift Xtended Fusion® | | | G5 |
| **396-702** | | 21 | 5/8 | | | 3.00/.250 | 1/2 | 1 | |
| Gator G6® | | | | | | Heavy-Duty High-Lift Xtended Fusion® | | | G6 |

## Steiner

| OREGON | OEM No. | Length | Center | Outer | C to C | W / T | Off | Lift | Prod. Code |
|---|---|---|---|---|---|---|---|---|---|
| **93-009** | 112111-01 | **16-1/4** | 5/8 | | | 2.50/.203 | 1/2 | 1-1/8 | |
| (3) for 48" cut, ZTM 200 Series Zero Turn | | | | | | | | | |
| **593-600** | | 16-1/4 | 5/8 | | | 3.00/.203 | 1/2 | 1 | |
| Gator G5 | | | | | | High-Lift Xtended Fusion® | | | G5 |
| **93-010** | 112111-02 | **18** | 5/8 | | | 2.50/.203 | 1/2 | 1-1/8 | |
| (3) for 52" cut, ZTM 200 Series Zero Turn | | | | | | Xtended | | | |
| **91-039** | | 18 | 5/8 | | | 2.50/.203 | 1/2 | 1 | |
| (3) for 52" cut, ZTM 200 Series Zero Turn | | | | | | | | | |
| **93-601** | | 18 | 5/8 | | | 2.50/.203 | 1/2 | 3/4 | |
| Gator G3™ | | | | | | | | | G3 |
| **593-601** | | 18 | 5/8 | | | 3.00/.203 | 1/2 | 1 | |
| Gator G5 | | | | | | High-Lift Xtended Fusion® | | | G5 |
| **393-601** | | 18 | 5/8 | | | 3.00/.250 | 1/2 | 1 | |
| Gator G6 | | | | | | Heavy-Duty High-Lift Xtended Fusion® | | | G6 |

B

# Blades - OEM Replacements

## Steiner

| | OREGON | OEM No. | Length | Center | Outer | C to C | W / T | Off | Lift | Prod. Code |
|---|---|---|---|---|---|---|---|---|---|---|
| (3) for 60" cut | **91-188** | 79-035 | **20-1/2** | 1/2 | | | 2.50/.203 | 0 | 1 | |
| | | | | | | | Xtended | | | |
| (3) for 60" cut, mulching | **91-217** | | 20-1/2 | 1/2 | | | 2.50/.203 | 0 | 1 | |
| Gator G6® | **396-739** | | 20-1/2 | 1/2 | | | 3.00/.250 | 0 | 1 | |
| | | | | | | | Heavy-Duty High-Lift Xtended Fusion® | | | G6 |
| (3) for 61" cut, ZTM 200 Series Zero Turn | **93-011** | 112111-03 | **21** | 5/8 | | | 2.50/.250 | 1/2 | 1-1/8 | |
| | | | | | | | Xtended | | | |
| (3) for 61" cut, low-lift, ZTM 200 Series Zero Turn | **93-013** | | 21 | 5/8 | | | 2.50/.250 | 1/2 | 5/8 | |
| | | | | | | | Xtended | | | |
| (3) for 61" cut, ZTM 200 Series Zero Turn | **91-135** | | 21 | 5/8 | | | 2.50/.203 | 1/2 | 1 | |
| Gator G3™ | **96-702** | | 21 | 5/8 | | | 2.50/.203 | 1/2 | 1 | |
| | | | | | | | | | | G3 |
| Gator G5 | **596-702** | | 21 | 5/8 | | | 3.00/.203 | 1/2 | 1 | |
| | | | | | | | High-Lift Xtended Fusion® | | | G5 |
| Gator G6 | **396-702** | | 21 | 5/8 | | | 3.00/.250 | 1/2 | 1 | |
| | | | | | | | Heavy-Duty High-Lift Xtended Fusion® | | | G6 |
| (3) for 72" cut, standard-lift, also fits Ventrac OEM# 79-0038 | **91-731** | 79-068 | **24-3/4** | 1/2 | | | 2.50/.250 | 0 | 11/16 | |
| Gator G6 | **391-731** | 79-037<br>79-038 | 24-3/4 | 1/2 | | | 3.00/.250 | 0 | 1 | |
| | | | | | | | Heavy-Duty High-Lift Xtended Fusion® | | | G6 |

B

## Sutech

| OREGON | OEM No. | Length | Center | Outer | C to C | W / T | Off | Lift | Prod. Code |
|---|---|---|---|---|---|---|---|---|---|
| **91-802** | 2107/11 | **12-1/2** | 5/8 h 3/4 w | 1/4 | 1-5/8 | 2.00/.203 | 0 | 7/8 | |
| (3) for 33" cut (straight cutting edge) | | | | | | | | | |
| **96-632** | 2107/09 2107/10 | 12-1/8 | 5/8 h 3/4 w | 1/4 | 1-5/8 | 2.50/.203 | 0 | 3/4 | |
| Gator® G3™ | | | | | | | Xtended | | G3 |

## Swisher

| | | | | | | | | | |
|---|---|---|---|---|---|---|---|---|---|
| **92-147** | 10358 | **15-1/2** | 3/4 | | | 2.50/.312 | 1/2 | 0 | |
| (4) for 52" cut, RTB18552 | | | | | | | | | |
| **91-573** | 3295 5059 | **17-1/2** | 3/8 | 3/8 | 3 | 2.50/.187 | 1/2 | 3/4 | G3 |
| Gator G3<br>Fits ZT2350A, ZT2450A | | | | | | | | | |
| **91-732** | 660 | **20-1/2** | 5/8 h 3/4 w | | | 2.25/.187 | 0 | 7/8 | |
| (3) for 60" cut | | | | | | | | | |
| **91-050** | 9004 9037 | **20-1/2** | 3/8 | 3/8 | 3 | 2.25/.187 | 1/2 | 13/16 | |
| (3) for 60" cut, model T-60<br>Finish Cut Trailmower | | | | | | | | | |
| **91-574** | 3293 | 20-1/2 | 3/8 | 3/8 | 3 | 2.50/.187 | 1/2 | 3/4 | G3 |
| Gator G3<br>(3) For 60" cut, T-60, T1360, T14560, T18560, T1360H, ZT2350, ZT2660, ZT2560, ZT2660B | | | | | | | | | |
| **391-574** | 20186 | 20-1/2 | 3/8 | 3/8 | 3 | 3.00/.250 | 1/2 | 1 | |
| Gator G6® | | | | | | | Heavy-Duty High-Lift Xtended Fusion® | | G6 |
| **91-051** | 9005 9036 B32S | **22** | 3/8 | 3/8 | 3 | 2.25/.187 | 1/2 | 13/16 | |
| (2) for 44" cut, model T-44<br>Finish Cut Trailmower | | | | | | | | | |
| **392-677** | 12504 12925 15767 | **22-1/2** | 3/8 | 3/8 | 3 | 3.00/.250 | 0 | 1 | |
| Gator G6<br>(2) for 44" cut and (3) for 66" cut | | | | | | | Heavy-Duty High-Lift Xtended Fusion® | | G6 |

B

# Blades - OEM Replacements

## Toro

| | OREGON | OEM No. | Length | Center | Outer | C to C | W / T | Off | Lift | Prod. Code |
|---|---|---|---|---|---|---|---|---|---|---|
| (3) for 36" cut, high-lift, for 1973-1976 side discharge mowers, fits long & short frame tractors. Plus, Commando 800, 5-0720, 5-0721, 5-0722 & 65-26M201 & 1-100776 | **91-802** | 100776<br>100777<br>101335 | **12-1/8** | 5/8 h<br>3/4 w | 1/4 | 1-5/8 | 2.00/.203 | 0 | 7/8 | |
| Gator® G3™ | **96-632** | | 12-1/8 | 5/8 h<br>3/4 w | 1/4 | 1-5/8 | 2.50/.203<br>Xtended | 0 | 3/4 | G3 |
| (3) for 42" cut, side discharge | **91-805** | 106077<br>106077-03<br>106636 | **13-7/8** | 3/4 | | | 2.00/.203 | 0 | 1-1/16 | |
| Gator G3 | **90-643** | | 13-7/8 | 3/4 | | | 2.50/.203 | 0 | 3/4 | G3 |
| Gator G3<br>(3) for 40" cut, turbo force deck | **96-374** | 108-4081<br>108-4081-03<br>108-4089-03<br>108-4110-03<br>108-4111-03<br>108-4112-03<br>114-4961 | **14**<br><br><br>114-4962<br>114-4963<br>114-4964<br>114-4965 | 5/8 | | | 2.50/.250 | 0 | 3/4 | G3 |
| (3) for 42" cut, rear discharge | **91-804** | 106108<br>106635<br>14-4879<br>79-2920<br>79-2920-03 | **14-1/2** | 3/4 | | | 2.00/.203 | 0 | 7/8 | |
| (1) 98-061 & (2) 198-063 for 46" cut, center blade, LX460, LX465, LX466, LX468 | **98-061** | 112-0302<br>112-3692 | **14-7/8** | 5/8<br>6 pt. Star | | | 2.50/.149<br>Xtended | 7/16 | 1-3/16 | |
| (1) 98-084 & (2) 98-085 for 46" cut, center blade, LX460, LX465, LX466, LX46 | **98-084** | | 14-7/8 | 5/8<br>6 pt. Star | | | 2.50/.203<br>Xtended | 7/16 | 1-1/8 | |
| Gator G3 | **98-637** | | 14-7/8 | 5/8<br>6 pt. Star | | | 2.50/.187 | 7/16 | 3/4 | G3 |
| Gator G5, (2) for 30" cut, 22200 Turfmaster walk-behind | **594-601** | 116-6358-03<br>116-6358-S | **15-3/8** | 5/8 | 5/16 | 1-1/4 | 3.00/.134<br>High-Lift Xtended Fusion® | 5/16 | 1 | G5 |

## Toro

| | OREGON | OEM No. | Length | Center | Outer | C to C | W / T | Off | Lift | Prod. Code |
|---|---|---|---|---|---|---|---|---|---|---|
| (3) for 44" cut, SFS deck | **94-026** | 106-0627<br>54-0010<br>54-0010-03<br>54-0010-09 | **15-1/2** | 5/8 | | | 2.50/.187 | 5/16 | 3/4 | |
| (3) for 44" cut, high-lift, SFS deck | **94-039** | 108-1125<br>44-5480<br>55-4940<br>55-4940-03<br>55-4940-09 | 15-1/2 | 5/8 | | | 2.50/.203 | 5/16 | 15/16 | |
| (3) For 44" cut, mulcher, SFS deck, recycler | **94-061** | 106-0630<br>92-7952<br>92-7952-03<br>92-7952-09 | 15-1/2 | 5/8 | | | 2.50/.187 | 5/16 | 1 | |
| Gator® G3™ | **94-615** | 100200<br>100-6490-03<br>104-1300<br>108-1116 | 15-1/2 | 5/8 | | | 2.50/.203 | 5/16 | 3/4 | G3 |
| (3) for 48" cut, side discharge, 5XI, XT Series, Z480, ZX480 | **91-806** | 106078<br>106637 | **16-1/16** | 3/4 | | | 2.00/.203 | 0 | 15/16 | |
| Gator G3 | **90-644** | | 16-1/16 | 3/4 | | | 2.50/.203 | 0 | 3/4 | G3 |
| (1) 98-061 & (2) 198-063 for 46" cut, outside blades, LX460, LX465, LX466, LX468 | **198-063** | 112-0304<br>112-3691 | **16-1/4** | 5/8<br>6 pt. Star | | | 2.50/.149 | 7/16 | 1-1/8 | 100<br>Xtended |
| (1) 98-084 & (2) 98-085 for 46" cut, outside blades, LX460, LX465, LX466, LX468 | **98-085** | | 16-1/4 | 5/8<br>6 pt. Star | | | 2.50/.203 | 7/16 | 1-1/8 | Xtended |
| Gator G3 | **98-640** | | 16-1/4 | 5/8<br>6 pt. Star | | | 2.50/.187 | 7/16 | 3/4 | G3 |
| Gator G5™ | **598-640** | | 16-1/4 | 5/8<br>6 pt. Star | | | 3.00/.164 | 7/16 | 1 | G5<br>High-Lift Xtended Fusion® |

B

# Blades - OEM Replacements

## Toro

| | OREGON | OEM No. | Length | Center | Outer | C to C | W / T | Off | Lift | Prod. Code |
|---|---|---|---|---|---|---|---|---|---|---|
| (2) for 32" cut, (3) for 48" cut | **91-313** | 103-2527<br>1-323515<br>E323515 | **16-1/4** | 5/8 | | | 2.50/.203 | 0 | 1 | |
| (2) for 32" cut, (3) for 48" cut | **91-180** | | 16-1/4 | 5/8 | | | 2.50/.187 | 0 | 1 | |
| (2) for 32" cut, (3) for 48" cut, heavy-duty | **91-183** | | 16-1/4 | 5/8 | | | 2.50/.250 | 0 | 1 | |
| (2) for 32" cut, (3) for 48" cut | **99-127** | | 16-1/4 | 5/8 | | | 2.50/.203 | 0 | 1-1/16 | |
| (2) for 32" cut, (3) for 48" cut, mulching | **91-368** | 103-2507<br>103-2517<br>1-403149<br>E403149 | 16-1/4 | 5/8 | | | 2.50/.203 | 0 | 1 | Xtended |
| Gator® G3™ | **96-310** | | 16-1/4 | 5/8 | | | 2.50/.203 | 0 | 3/4 | G3 |
| Gator G5™ | **596-310** | | 16-1/4 | 5/8 | | | 3.00/.203 | 0 | 1 | High-Lift Xtended Fusion® G5 |
| Gator G6® | **396-716** | | 16-1/4 | 5/8 | | | 3.00/.250 | 0 | 1 | Heavy-Duty High-Lift Xtended Fusion® G6 |
| (3) for 48" cut, Titan | **92-029** | 109-6872 | **16-1/4** | 15/16 | | | 2.50/.203 | 0 | 1 | Xtended |
| (3) for 48" cut, mulching, Titan | **92-026** | | 16-1/4 | 15/16 | | | 2.50/.203 | 0 | 1 | Xtended |
| Gator G3 | **96-321** | | 16-1/4 | 15/16 | | | 2.50/.203 | 0 | 1 | G3 |
| Gator G5 | **596-321** | | 16-1/4 | 15/16 | | | 3.00/.203 | 0 | 1 | High-Lift Xtended Fusion® G5 |
| Gator G6 | **396-321** | | 16-1/4 | 15/16 | | | 3.00/.250 | 0 | 1 | Heavy-Duty High-Lift Xtended Fusion® G6 |

B

## Toro

| | OREGON | OEM No. | Length | Center | Outer | C to C | W / T | Off | Lift | Prod. Code |
|---|---|---|---|---|---|---|---|---|---|---|
| | | | GROUP CONTINUES | | | | | | | |
| (3) for 48" deck, fits Toro Commercial Recycler Mowers | **94-125** NEW | 1073196 | **16-1/2** | 5/8 | | | 2.50/.250 | 0 | 1-1/8 | |
| (3) for 48" cut, high-lift, turbo force deck | **92-036** | 107-3192<br>107-3192-03 | 16-1/2 | 5/8 | | | 2.50/.250 | 0 | 1 | |
| (3) for 48" cut, Extra high-lift, turbo force decks built 2010 and later | **91-621** | | 16-1/2 | 5/8 | | | 3.00/.203 | 0 | 1-1/2 | |
| (3) for 48" cut, low-lift, turbo force deck | **92-207** | | 16-1/2 | 5/8 | | | 2.50/.203 | 0 | 13/16 | |
| | | | | | | | Xtended | | | |
| (3) for 48" cut, mulching, turbo force deck | **92-743** | | 16-1/2 | 5/8 | | | 2.50/.203 | 0 | 1 | |
| | | | | | | | Xtended | | | |
| (3) for 48" cut, turbo force deck | **91-620** | | 16-1/2 | 5/8 | | | 2.50/.203 | 0 | 1 | |
| | | | | | | | Xtended | | | |
| (3) for 48" cut, turbo force deck | **92-145** | | 16-1/2 | 5/8 | | | 2.50/.203 | 0 | 1 | |
| (3) for 48" cut, turbo force deck | **99-126** | | 16-1/2 | 5/8 | | | 2.50/.203 | 0 | 1-1/16 | |
| Gator® G3™ | **96-308** | 107-3193<br>107-3193-03<br>107-3194<br>107-3194-03<br>107-3195<br>107-3195-03<br>107-3196 | 16-1/2<br><br><br>107-3196-03<br>110-0415<br>110-0416<br>110-0417 | 5/8 | | | 2.50/.203 | 0 | 1 | G3 |
| Gator G5™, turbo force decks built 2010 and later | **596-308** | | 16-1/2 | 5/8 | | | 3.00/.203 | 0 | 1 | |
| | | | | | | | High-Lift Xtended Fusion® | | | G5 |
| Gator G6®, turbo force decks built 2010 and later | **396-735** | | 16-1/2 | 5/8 | | | 3.00/.250 | 0 | 1 | |
| | | | | | | | Heavy-Duty High-Lift Xtended Fusion® | | | G6 |
| (3) for 50" cut, model 718Z | **91-502** | 113579<br>113579-09 | **17** | 5/8 | | | 2.50/.203 | 0 | 1-3/16 | |
| | | | | | | | Xtended | | | |
| (3) for 50" cut, high-lift, model 718Z | **91-505** | | 17 | 5/8 | | | 2.50/.250 | 0 | 1-1/8 | |
| | | | | | | | Xtended | | | |

GROUP CONTINUES

B

# Blades - OEM Replacements

## Toro

GROUP CONTINUES

| | OREGON | OEM No. | Length | Center | Outer | C to C | W / T | Off | Lift | Prod. Code |
|---|---|---|---|---|---|---|---|---|---|---|
| Gator G3 | **96-323** | 108-4115-03<br>108-4117-03<br>110-9915-03<br>110-9961-03<br>114-4956<br>114-4957<br>114-4959<br>114-4960 | 17 | 5/8 | | | 2.50/.203 | 0 | 1 | G3 |
| Gator G5 | **596-323** | | 17 | 5/8 | | | 3.00/.203 | 0 | 1 | High-Lift Xtended Fusion® G5 |
| Gator G6 | **396-723** | | 17 | 5/8 | | | 3.00/.250 | 0 | 1 | Heavy-Duty High-Lift Xtended Fusion® G6 |
| (2) for 34" cut, Turbo Force, Z Master, Z300, Z334 | **94-085** | 110-9915-03<br>114-4959 | **17-1/2** | 5/8 | | | 2.50/.250 | 0 | 1 | |
| Gator® G5™ | **594-085** | 108-4115-03<br>108-4117-03<br>110-9961-03<br>114-4956<br>114-4957<br>114-4960 | 17-1/2 | 5/8 | | | 3.00/.203 | 0 | 1 | High-Lift Xtended Fusion® G5 |
| (3) for 50" cut, high-lift, TimeCutter (MX5060, SS5000, SS5035, SS5060) | **94-128** | 115-5059<br>115-5059-03 | **17-1/2** | 5/8 | | | 2.25/.164 | 5/16 | 1-1/4 | |
| Gator G5 | **594-078** | 115-5062-03 | 17-1/2 | 5/8 | | | 3.00/.164 | 3/8 | 1 | High-Lift Xtended Fusion® G5 |
| (3) for 50" cut, TimeCutter Z(5000, 5020, 5030, 5035, 5040, 5060) | **94-063** | 112-9759-03 | **17-1/2** | 5/8 | | | 2.25/.164 | 1/2 | 15/16 | |
| (3) for 50" cut, high-lift, TimeCutter Z(5000, 5020, 5030, 5035, 5040, 5060) | **94-059** | 110-6837-03 | 17-1/2 | 5/8 | | | 2.25/.164 | 7/16 | 1-3/16 | |
| Gator G3™ | **96-382** | | 17-1/2 | 5/8 | | | 2.25/.187 | 7/16 | 3/4 | G3 |

B

## Toro

| | OREGON | OEM No. | Length | Center | Outer | C to C | W / T | Off | Lift | Prod. Code |
|---|---|---|---|---|---|---|---|---|---|---|
| (3) for 50" cut, GT2100, GT2200, LX500, SL500 | **198-086** | 112-0316 | **17-3/4** | 5/8 6 pt. Star | | | 2.50/.149 | 7/8 | 3/4 | Xtended 100 |
| (3) for 50" cut, high-lift, GT2100, GT2200, LX500, SL500 | **98-097** | | 17-7/8 | 5/8 6 pt. Star | | | 2.50/.149 | 15/16 | 1-3/8 | |
| Gator G3 | **91-938** | | 17-7/8 | 5/8 6 pt. Star | | | 2.50/.187 | 15/16 | 3/4 | G3 |
| Gator G5 | **591-938** | | 17-7/8 | 5/8 6 pt. Star | | | 3.00/.164 | 15/16 | 1 | High-Lift Xtended Fusion® G5 |
| (2) for 36" cut, (3) for 52" cut, SFS deck | **94-018** | 106-0628<br>27-0990<br>27-0990-03<br>27-0990-09<br>44-5480 | **18** | 1/2 | | | 2.50/.187 | 3/16 | 11/16 | |
| (2) for 36" cut, (3) for 52" cut, high-lift, SFS deck | **94-022** | 106-0626<br>56-2390<br>56-2390-03<br>56-2390-09 | 18 | 1/2 | | | 2.50/.187 | 3/16 | 1 | |
| Gator® G3™ | **94-618** | 104-1301<br>108-1127<br>108-1477<br>92-7961<br>92-7961-03<br>92-7961-09 | 18 | 1/2 | | | 2.50/.203 | 3/16 | 3/4 | G3 |
| (3) for 52" cut, Time Cutter ZX | **94-064** | 107-1741-03 | **18** | 5/8 | | | 2.50/.187 | 3/16 | 11/16 | |
| Gator G3 | **96-395** | 107-1742<br>107-1742-03<br>120-2379<br>120-2379-03 | 18 | 5/8 | | | 2.50/.203 | 3/16 | 3/4 | G3 |
| (3) for 52" Z Force Turbo master decks | **94-135** NEW | 110-0406<br>105779503 | **18** | 5/8 | | | 2.50/.250 | 0 | 11/16 | |
| (2) for 36" cut, (3) for 52" cut, turbo force deck, Laser Z, Metro, ProLine,Turf Ranger, Turf Tracer, Viking | **91-181** | 1-633485<br>E633485 | 18 | 5/8 | | | 2.50/.187 | 0 | 1 | Xtended |

GROUP CONTINUES

B

# Blades - OEM Replacements

## Toro

| | OREGON | OEM No. | Length | Center | Outer | C to C | W / T | Off | Lift | Prod. Code |
|---|---|---|---|---|---|---|---|---|---|---|
| | | | GROUP CONTINUES | | | | | | | |
| | **94-053** | 105-7781<br>105-7781-03 | 18 | 5/8 | | | 2.50/.250 | 0 | 1 | |
| (2) for 36", (3) for 52" cut, high-lift, turbo force deck, Laser Z, Metro, ProLine,Turf Ranger, Turf Tracer, Viking | | | | | | | | | | |
| | **91-312** | 103-2528<br>1-633482<br>E633482 | 18 | 5/8 | | | 2.50/.203 | 0 | 1 | |
| | | | | | | | Xtended | | | |
| (2) for 36", (3) for 52" cut, turbo force deck, Laser Z, Metro, ProLine,Turf Ranger, Turf Tracer, Viking | | | | | | | | | | |
| | **94-132**<br>NEW | 105777903 | 18 | 5/8 | | | 2.50/.250 | 0 | 1-1/8 | |
| (3) for 52", 2 for 36" decks | | | | | | | | | | |
| | **91-623** | | 18 | 5/8 | | | 3.00/.203 | 0 | 1-1/2 | |
| | | | | | | | Xtended | | | |
| (2) for 36" cut, (3) for 52", super high-lift cut, turbo force deck, Laser Z, Metro, ProLine,Turf Ranger, Turf Tracer, Viking | | | | | | | | | | |
| | **91-235** | | 18 | 5/8 | | | 2.50/.250 | 0 | 7/8 | |
| | | | | | | | Xtended | | | |
| (2) for 36" cut, (3) for 52" cut, low-lift, turbo force deck, Laser Z, Metro, ProLine,Turf Ranger, Turf Tracer, Viking | | | | | | | | | | |
| | **91-184** | | 18 | 5/8 | | | 2.50/.250 | 0 | 1 | |
| | | | | | | | Xtended | | | |
| (2) for 36" cut, (3) for 52" cut, heavy-duty, turbo force deck, Laser Z, Metro, ProLine,Turf Ranger, Turf Tracer, Viking | | | | | | | | | | |
| | **91-335** | 103-2518 | 18 | 5/8 | | | 2.50/.203 | 0 | 1 | |
| | | | | | | | Xtended | | | |
| (2) for 36" cut, (3) for 52" mulching, recycler, turbo force deck, Laser Z, Metro, ProLine,Turf Ranger, Turf Tracer, Viking | | | | | | | | | | |
| | **91-256** | 105-7794<br>105-7794-03 | 18 | 5/8 | | | 2.50/.203 | 0 | 1 | |
| | | | | | | | Xtended | | | |
| (2) for 36" cut, (3) for 52" mulching, turbo force deck, Laser Z, Metro, ProLine,Turf Ranger, Turf Tracer, Viking | | | | | | | | | | |
| | **91-622** | | 18 | 5/8 | | | 2.50/.203 | 0 | 1 | |
| | | | | | | | Xtended | | | |
| (2) for 36" cut, (3) for 52" cut, turbo force deck, Laser Z, Metro, ProLine,Turf Ranger, Turf Tracer, Viking | | | | | | | | | | |
| | | | GROUP CONTINUES | | | | | | | |

B

## Toro

| | OREGON | OEM No. | Length | Center | Outer | C to C | W / T | Off | Lift | Prod. Code |
|---|---|---|---|---|---|---|---|---|---|---|
| | | | GROUP CONTINUES | | | | | | | |
| (2) for 36" cut, (3) for 52" cut, turbo force deck, Laser Z, Metro, ProLine,Turf Ranger, Turf Tracer, Viking | **91-637** | | 18 | 5/8 | | | 2.50/.203 | 0 | 1 | |
| Gator® G3™ | **96-344** | 103-2508<br>105-7779<br>105-7779-03<br>105-7795<br>105-7795-03<br>105-7796<br>105-7796-03 | 18<br><br><br>108-1118<br>110-0406<br>110-0408<br>110-0409 | 5/8 | | | 2.50/.203 | 0 | 3/4 | G3 |
| (3) for 52" cut, Titan Z5200 | **92-030** | 109-6873 | **18** | 15/16 | | | 2.50/.203<br>Xtended | 0 | 1 | |
| (3) for 52" cut, mulching, Titan Z5200 | **92-027** | | 18 | 15/16 | | | 2.50/.203 | 0 | 1 | |
| Gator G3 | **96-322** | | 18 | 15/16 | | | 2.50/.203<br>Xtended | 0 | 1 | G3 |
| Gator G5™ | **596-322** | | 18 | 15/16 | | | 3.00/.203<br>High-Lift Xtended Fusion® | 0 | 1 | G5 |
| Gator G6® | **396-322** | | 18 | 15/16 | | | 3.00/.250<br>Heavy-Duty High-Lift Xtended Fusion® | 0 | 1 | G6 |
| (3) for 54" cut, mulching, Titan MX5400, MX5480, ZX5400, ZX5420, ZX5450 | **94-060** | 115-9650-03 | **18-3/4** | 5/8 | | | 2.25/.164 | 5/16 | 1-1/8 | G3 |
| (3) for 54" cut, mulcher, Titian ZX5400 and ZX5420 | **94-070** | 115-4999<br>115-4999-03 | 18-3/4 | 5/8 | | | 2.25/.164 | 5/16 | 7/8 | |
| Gator G3 | **96-803** | 115-2454-03<br>115-9650-03 | 18-3/4 | 5/8 | | | 2.25/.164 | 5/16 | 3/4 | G3 |
| Gator G6 | **396-803** | | 18-3/4 | 5/8 | | | 3.00/.250<br>Heavy-Duty High-Lift Xtended Fusion® | 5/16 | 1 | G6 |

B

# Blades - OEM Replacements

## Toro

| | OREGON | OEM No. | Length | Center | Outer | C to C | W / T | Off | Lift | Prod. Code |
|---|---|---|---|---|---|---|---|---|---|---|
| (7) for 455D, 4100D | **94-043** | 106-7166-03<br>86-0010<br>86-0010-03 | **19** | 1/2 | | | 2.50/.250 | 3/16 | 7/8 | |
| Gator G3 | **96-701** | 107-0210-03<br>107-0215<br>107-0215-03<br>108-1451<br>108-1452<br>110-6116-03 | 19 | 1/2 | | | 2.50/.250 | 3/16 | 1 | G3 |
| (2) for 38" cut, recycler mulching blade | **94-032** | 14-4889<br>14-7799<br>79-1720<br>79-3060<br>79-3061<br>79-3061-03 | **19-1/4** | 5/8 | | | 2.50/.187 | 9/16 | 3/4 | |
| (2) for 38" cut, high-lift, front engine rider | **94-038** | 57-4700<br>57-4700-03<br>57-4700-09 | 19-1/4 | 5/8 | | | 2.50/.187 | 9/16 | 1-1/4 | |
| Gator® G3™ | **94-602** | | 19-1/4 | 5/8 | | | 2.50/.203 | 9/16 | 3/4 | G3 |
| (11) for 192" cut, Groundsmaster 5900 and 5910 | **94-079** | 110-5946<br>110-5946-03 | **20** | 1/2 | | | 2.50/.250 | 1/2 | 15/16 | |
| Gator G3 | **96-802** | 110-5948<br>110-5948-03 | 20 | 1/2 | | | 2.50/.250 | 1/2 | 3/4 | G3 |
| (11) for 16' cut, Groundsmaster 580D model | **94-029** | 69-6920 | **20** | 5/8 | | | 2.50/.250 | 3/16 | 1 | |
| Gator G3 | **94-620** | 107-0217-03<br>108-1453 | 20 | 5/8 | | | 2.50/.203 | 3/16 | 3/4 | G3 |
| (3) for 60" cut, Groundsmaster 7200 | **94-072** | 110-4702-03 | **20-1/2** | 1/2 | | | 2.50/.250 | 0 | 3/4 | |
| (3) for 60" rear discharge Z Master decks | **94-133** NEW | 108-1128<br>105771603 | 20-1/2 | 5/8 | | | 2.50/.250 | 0 | 11/16 | |
| (3) for 60" Deck | **94-138** NEW | 110-4701 | 20-1/2 | 5/8 | | | 2.50/.250 | 0 | 1 | |

GROUP CONTINUES

## Toro

| | OREGON | OEM No. | Length | Center | Outer | C to C | W / T | Off | Lift | Prod. Code |
|---|---|---|---|---|---|---|---|---|---|---|
| (3) for 60" deck, fits Professional Z Master with 7-guage side | **94-126** NEW | 105771503 | 20-1/2 | 5/8 | | | 2.50/.250 | 0 | 1 | |
| Gator G3 | **96-801** | 110-4701<br>110-4701-03<br>110-4703<br>110-4703-03 | 20-1/2 | 1/2 | | | 2.50/.250 | 0 | 1 | G3 |
| (3) for 60" cut | **91-503** | 112947 | **20-1/2** | 5/8 | | | 2.50/.203 | 0 | 1-3/16 | Xtended |
| (3) for 60" deck, Recycler decks | **94-130** NEW | 105777703 | 20-1/2 | 5/8 | | | 2.50/.250 | 0 | 1-1/8 | |
| (3) for 60" cut, high-lift, turbo force deck | **94-055** | 105-7718<br>105-7718-03<br>108-1114 | 20-1/2 | 5/8 | | | 2.50/.250 | 0 | 1 | |
| Gator G3 | **96-319** | 105-7715<br>105-7715-03<br>105-7716<br>105-7716-03<br>105-7777<br>105-7777-03<br>105-8777<br>105-8777-03 | 20-1/2<br><br>106-8777<br>108-1115<br>108-1123<br>108-1128<br>110-0405<br>125-9329-01 | 5/8 | | | 2.50/.203 | 0 | 3/4 | G3 |
| Gator G5™ Turbo Force deck built 2010 and later | **596-319** | | 20-1/2 | 5/8 | | | 3.00/.203 | 0 | 1 | High-Lift Xtended Fusion® G5 |
| Gator G6® Turbo Force deck built 2010 and later | **396-740** | | 20-1/2 | 5/8 | | | 3.00/.250 | 0 | 1 | Heavy-Duty High-Lift Xtended Fusion® G6 |
| (1) for 21" cut, walk-behind recycler | **94-127** | 14-1659<br>62-7700<br>62-7700-03<br>62-7700-03P<br>75-9420<br>91-2256 | **20-15/16**<br><br><br><br>91-2256-03<br>91-2256-03P<br>91-2256-03-PLT | 7/16 | 3/8 | 2-7/16 | 2.25/.134 | 5/16 | 7/8 | |
| 21" cut, super high-lift, Vacu-Power models, walk-behind mower | **94-770** | | 20-15/16 | 7/16 | 3/8 | 2-7/16 | 2.25/.134 | 3/8 | 7/8 | |
| Gator® G3™ Will not fit BBC equipped mowers. | **96-600** | | 20-15/16 | 7/16 | 3/8 | 2-7/16 | 2.25/.134 | 5/16 | 3/4 | G3 |

GROUP CONTINUES

# Blades - OEM Replacements

## Toro

| | OREGON | OEM No. | Length | Center | Outer | C to C | W / T | Off | Lift | Prod. Code |
|---|---|---|---|---|---|---|---|---|---|---|
| (1) for 21" cut, walk-behind mower | **94-051** | 108-3762-03<br>108-3762-03P<br>91-3106<br>93-4106-03<br>93-4106-03P | **20-7/8** | 7/16 | 3/8 | 2-1/2 | 2.25/.149 | 7/16 | 7/8 | |
| Gator G3 | **96-660** | 108-0954<br>108-0954-03 | 20-7/8 | 7/16 | 3/8 | 2-1/2 | 2.25/.134 | 7/16 | 1 | G3 |
| (1) for 21" cut, walk-behind mower | **92-011** | 612543<br>612543-01<br>612543-03<br>683682<br>684380 | **20-15/16** | 5/8 | 1/2 | 2-9/16 | 3.00/.120 | 11/16 | 7/8 | |
| 21" cut, Grassmaster models 1974-1977, used on models with blade brake clutch | **94-017** | 107-4276-03<br>26-0880<br>3-8615<br>42-1000<br>42-1000-03<br>5-0751 | **21** | 7/16 | 3/8 | 2-7/16 | 2.25/.134 | 5/16 | 7/8 | |
| (3) for 62" cut, SFS deck | **94-019** | 106-0629<br>44-6250<br>44-6250-03 | **21-1/2** | 1/2 | | | 2.50/.187 | 3/16 | 11/16 | |
| Gator G3 | **94-621** | 104-1303<br>106-0631 | 21-1/2 | 1/2 | | | 2.50/.203 | 3/16 | 3/4 | G3 |
| Gator G6 (2) for 42" cut, Timecutter MX4200, MX4250 SS4200, SS4225, SS4250, SW4200 | **394-129** | 114-1625<br>131-3939-03<br>131-3939-03P<br>79220<br>79220P | **21-9/16** | 5/8 | | | 3.00/.250 | 5/16 | 1 | Heavy-Duty High-Lift Xtended Fusion® G6 |
| (2) for 42" cut, Time Cutter Z | **94-069** | 110-1857-03<br>110-6568<br>110-6568-03<br>117-5372-03 | **21-9/16** | 5/8 | | | 2.25/.164 | 5/8 | 1-1/4 | |
| (2) for 42" cut, mulcher, recycler, Time Cutter Z | **94-068** | 106-2247<br>106-2247-03 | 21-9/16 | 5/8 | | | 2.25/.164 | 9/16 | 13/16 | |
| Gator® G3™ | **96-362** | | 21-9/16 | 5/8 | | | 2.25/.187 | 5/8 | 3/4 | G3 |
| Gator G5™ | **596-362** | | 21-9/16 | 5/8 | | | 3.00/.187 | 5/8 | 1 | High-Lift Xtended Fusion® G5 |

B

## Toro

| | OREGON | OEM No. | Length | Center | Outer | C to C | W / T | Off | Lift | Prod. Code |
|---|---|---|---|---|---|---|---|---|---|---|
| | **94-045** | 92-5608<br>92-5608-03 | **21-11/16** | 1/2 | | | 2.50/.250 | 1/2 | 1 | |
| (3) for 62" cut, recycler, (7) for 11' Groundmaster 4000d | | | | | | | | | | |
| | **96-708** | 107-0241-03<br>110-6115-03 | 21-11/16 | 1/2 | | | 2.50/.250 | 1/2 | 1 | G3 |
| Gator G3 | | | | | | | | | | |
| | **94-322** | 104-8697<br>104-8697-03<br>104-8697-03P | **21-11/16** | 7/16 | 3/8 | 2-1/2 | 2.25/.149 | 7/16 | 13/16 | |
| (1) for 22" cut, walk-behind mower, recycler | | | | | | | | | | |
| | **96-607** | 108-9764<br>108-9764-03<br>108-9764-03P<br>131-4546-03<br>131-4547-03<br>59534<br>59534P | 21-11/16 | 7/16 | 3/8 | 2-1/2 | 2.25/.149 | 7/16 | 3/4 | G3 |
| Gator G3 | | | | | | | | | | |
| | **94-075** | 108-7395-03 | **22** | 1/2 | | | 2.50/.250 | 1/2 | 15/16 | |
| Combo, 4300-D | | | | | | | | | | |
| | **94-077** | 117-0209-03 | 22 | 1/2 | | | 2.50/.187 | 7/16 | 1 | |
| Angle, 4300-D | | | | | | | | | | |
| | **94-076** | 114-0434-03 | 22 | 1/2 | | | 2.50/.250 | 1/2 | 1 | |
| High-lift, 4300-D | | | | | | | | | | |
| | **96-075** | | 22 | 1/2 | | | 2.50/.187 | 1/2 | 3/4 | G3 |
| Gator® G3™ | | | | | | | | | | |
| | **394-075** | 114-0435-03 | 22 | 1/2 | | | 3.00/.250 | 1/2 | 1 | |
| Gator G6® | | | | | | | | | | Heavy-Duty High-Lift Xtended Fusion® G6 |
| | **94-074** | 110-0621<br>110-0621-03 | **24-1/2** | 1/2 | | | 2.50/.250 | 0 | 1 | |
| (3) for Groundsmaster 3280-D3320 | | | | | | | | | | |
| | **94-071** | 110-0622-03<br>110-0624<br>110-0624-03 | 24-1/2 | 1/2 | | | 2.50/.250 | 0 | 3/4 | G3 |
| Gator G3 | | | | | | | | | | |

B

# Blades - OEM Replacements

## Toro

| | OREGON | OEM No. | Length | Center | Outer | C to C | W / T | Off | Lift | Prod. Code |
|---|---|---|---|---|---|---|---|---|---|---|
| (3) for 72" deck, low-lift | **94-136** NEW | 110-0410<br>105771203 | **24-1/2** | 5/8 | | | 2.50/.250 | 0 | 11/16 | |
| (3) for 72" mid-flow deck, Z Master | **94-134** NEW | 110-0404<br>105771103 | 24-1/2 | 5/8 | | | 2.50/.250 | 0 | 1 | |
| (3) for 72" cut, high-lift, turbo force deck | **92-035** | 105-7784<br>105-7784-03<br>108-1120 | 24-1/2 | 5/8 | | | 3.00/.250 | 0 | 1-3/16 | |
| (3) for 72" deck | **94-131** NEW | 105777803 | 24-1/2 | 5/8 | | | 2.50/.250 | 0 | 1-1/8 | |
| Gator G3 | **96-341** | 105-7711<br>105-7711-03<br>105-7712<br>105-7712-03<br>105-7719<br>105-7719-03<br>105-7778<br>105-7778-03<br>108-1126<br>110-0404<br>110-0410<br>110-0411 | 24-1/2 | 5/8 | | | 2.50/.203 | 0 | 3/4 | G3 |
| Gator G5™, Turbo Force deck built 2010 and later | **596-341** | | 24-1/2 | 5/8 | | | 3.00/.203 | 0 | 1 | High-Lift Xtended Fusion® G5 |
| Gator G6, Turbo Force deck built 2010 and later | **396-764** | | 24-1/2 | 5/8 | | | 3.00/.250 | 0 | 1 | Heavy-Duty High-Lift Xtended Fusion® G6 |
| Gator G3<br>(3) for 72" cut, rear discharge, right-hand cut, Groundmaster | **96-724** | 52-0240<br>52-0250<br>52-0260 | **24-3/4** | 1/2 | | | 2.50/.250 | 1/2 | 1 | G3 |
| (3) for 72" cut, high-lift, left-hand cut, heavy-duty, Groundsmaster | **94-011** | 29-5530<br>29-5530-03 | **25** | 3/4 | | | 2.50/.250 | 1/4 | 1-1/16 | |
| Gator G3 | **96-602** | | 25 | 3/4 | | | 2.50/.250 | 1/4 | 1 | G3 |
| (1) 92-167 & (1) 92-168 for 48" cut, left-hand cut, Z Master | **92-167** | 130-2862 | **25** | 7/8 | 1/4 | 3 | 2.75/.164 | 1-1/16 | 13/16 | |
| (1) 92-167 & (1) 92-168 for 48" cut, Z Master | **92-168** | 130-2861 | 25 | 7/8 | 1/4 | 3 | 2.75/.164 | 1-1/16 | 13/16 | |

## Toro

| | OREGON | OEM No. | Length | Center | Outer | C to C | W / T | Off | Lift | Prod. Code |
|---|---|---|---|---|---|---|---|---|---|---|
| (3) for 72" cut, recycler, Groundsmaster | **94-040** | 85-6040<br>85-6040-03 | **25-3/16** | 1/2 | | | 2.50/.250 | 1/4 | 1-1/8 | |
| Gator® G3™ | **96-705** | | 25-3/16 | 1/2 | | | 2.50/.250 | 1/4 | 1 | G3 |
| (3) for 72" cut, Z597-D Z Master | **94-073** | 108-1958<br>108-1958-03 | **25-3/16** | 1/2 | | | 2.50/.250 | 1/2 | 1-1/8 | |
| (3) for 72" cut, 3500-D, 3505-D, 4500-D, 4700-D | **94-052** | 100-5754<br>100-5754-03<br>105-9810<br>105-9810-03<br>105-9810-05 | **27** | 1/2 | | | 2.50/.250 | 1/2 | 15/16 | |
| (3) for 72" cut, 3500-D, 3505-D, 4500-D, 4700-D | **94-049** | 108-9026-03 | 27 | 1/2 | | | 2.50/.250 | 1/2 | 3/4 | |
| Gator G3 | **96-741** | 104-5183<br>105-4089<br>105-4089-03<br>107-0235-03 | 27 | 1/2 | | | 2.50/.250 | 1/2 | 1 | G3 |
| (1) for 32" cut, timecutter, recycler | **94-021** | 33-4750<br>33-4750-03 | **31-7/16** | 5/8 | | | 2.50/.187 | 5/16 | 1-3/16 | |

## Troy-Bilt (also see MTD)

| | | | | | | | | | | |
|---|---|---|---|---|---|---|---|---|---|---|
| (2) 198-063 & (1) 98-061 for 46" cut - star center hole, outside blades, MTD 3-in-1 mulcher, 1999 & after, fits auto-drive step-through tractors | **198-063** | | **16-1/4** | 5/8<br>6 pt. Star | | | 2.50/.149 | 7/16 | 1-1/8 | Xtended 100 |
| (2) 98-057 & (1) 98-056 for 46" cut, outside blades for 600" & 800 series, deep deck, 1996 and before | **98-057** | 742-0542<br>942-0542 | 16-1/4 | 11/16<br>6 pt. Star | 5/16 | 2-1/2 | 3.00/.120 | 5/16 | 1-3/16 | |
| (2) 198-063 & (1) 98-061 for 46" cut - star center hole, outside blades, 3-in-1 mulcher, 1999 & after, fits auto-drive step-through tractors | **198-063** | 742-0611<br>742-0611A<br>942-0611<br>942-0611A | **16-1/4** | 5/8<br>6 pt. Star | | | 2.50/.149 | 7/16 | 1-1/8 | Xtended 100 |
| (2) 98-085 & (1) 98-084 for 46" cut - star center hole, outside blades, 3-in-1 mulcher, 1999 & after, fits auto-drive step-through tractors | **98-085** | | 16-1/4 | 5/8<br>6 pt. Star | | | 2.50/.203 | 7/16 | 1-1/8 | Xtended |

GROUP CONTINUES

# Blades - OEM Replacements

## Troy-Bilt (also see MTD)

| | OREGON | OEM No. | Length | Center | Outer | C to C | W / T | Off | Lift | Prod. Code |
|---|---|---|---|---|---|---|---|---|---|---|
| | | | GROUP CONTINUES | | | | | | | |
| Gator® G3™ | **98-640** | 742-04043<br>742-04125-X<br>742-0611-X<br>942-04125-X<br>942-0611-X | 16-1/4 | 5/8<br>6 pt. Star | | | 2.50/.187 | 7/16 | 3/4 | G3 |
| Gator G5™ | **598-640** | 742-04043<br>742-04125-X<br>742-0611-X<br>942-04125-X<br>942-0611-X | 16-1/4 | 5/8<br>6 pt. Star | | | 3.00/.164 | 7/16 | 1 | G5 |
| | | | | | | | High-Lift Xtended Fusion® | | | |
| (3) for 46" cut - star center hole, deep deck, 1997 & after use (2) 98-054 with (1) 98-069 for 46" cut, outside blades for 46" cut model series 600 & 800 built since 1997 | **98-054** | 742-0644<br>942-0644 | **16-1/4** | 5/8<br>6 pt. Star | | | 3.00/.120 | 5/16 | 1-3/16 | |
| Gator G3 | **98-634** | | 16-1/4 | 5/8<br>6 pt. Star | | | 2.50/.187 | 5/16 | 3/4 | G3 |
| (3) for 50" cut, side discharge, fits models 985,992,993, 958, 998 - 1997 & before | **98-037** | 742-0171<br>742-0171B<br>942-0171B<br>OEM-742-0171B | **17-1/4** | 3/8 | 5/16 | 2-1/2 | 2.50/.187 | 5/16 | 1-1/8 | |
| (2) for 33" cut, wide-area mowers, TBWC33XP | **98-094** | 742-04154<br>742-04154A<br>942-04154<br>942-04154A | **17-7/8** | bow-tie | | | 2.50/.149 | 1 | 1-1/8 | |
| Gator G3 | **98-671** | | 17-7/8 | bow-tie | 5/16 | 2-1/2 | 2.50/.149 | 1 | 3/4 | G3 |
| 19" cut, mulching, 12AE189D011, 12AE189E211 | **92-140** | 742-0739<br>942-0739 | **19** | bow-tie | 5/16 | 2-1/2 | 2.25/.134 | 1/4 | 1-1/8 | |
| (2) for 38" cut, star center hole, mulcher, MTD , 3-in-1 blade, deep deck - 1992 & after | **198-058** | | **19-5/16** | 5/8<br>6 pt. Star | | | 2.75/.149 | 3/8 | 1-1/2 | 100 |
| | | | | | | | Xtended | | | |
| (2) for 38" cut, use in place of our 198-058 for non-mulching | **198-052** | | 19-5/16 | 5/8<br>6 pt. Star | | | 3.00/.149 | 5/16 | 1-1/4 | 100 |
| | | | | | | | Xtended | | | |

GROUP CONTINUES

B

## Troy-Bilt (also see MTD)

| | OREGON | OEM No. | Length | Center | Outer | C to C | W / T | Off | Lift | Prod. Code |
|---|---|---|---|---|---|---|---|---|---|---|
| | | | GROUP CONTINUES | | | | | | | |
| Gator® G3™ | **98-628** | | 19-5/16 | 5/8 6 pt. Star | | | 2.50/.187 | 5/16 | 3/4 | G3 |
| Gator G5™ | **598-628** | | 19-5/16 | 5/8 6 pt. Star | | | 3.00/.164 | 5/16 | 1 | High-Lift Xtended Fusion® G5 |
| 21" cut, mulcher, 1995 and er, fits bowtie center hole | **198-049** | 490-100-M084<br>742-0741<br>742-0741A<br>942-0641<br>OEM-742-0741 | **21** | bow-tie | 5/16 | 2-1/2 | 2.25/.134 | 1/4 | 15/16 | Xtended 100 |
| 21" cut | **98-098** | | 21 | bow-tie | 5/16 | 2-1/2 | 2.25/.134 | 1/4 | 13/16 | |
| Gator G3 | **98-631** | | 21 | bow-tie | 5/16 | 2-1/2 | 2.50/.187 | 5/16 | 3/4 | G3 |
| Gator G5 | **598-631** | | 21 | bow-tie | 5/16 | 2-1/2 | 3.00/.149 | 5/16 | 1 | High-Lift Xtended Fusion® G5 |
| (2) for 42" cut, deep deck - 1997 & after; auto-drive 1999 & after | **98-093** | 490-110-M108<br>742-04308<br>742-0656<br>942-04308<br>942-0656<br>OEM-742-04308 | **21-3/16** | 5/8 6 pt. Star | | | 2.75/.149 | 3/8 | 7/8 | |
| (2) for 42" cut, high-lift, deep deck - 1997 & after; auto-drive 1999 & after | **198-153** | 742-04087<br>942-04087 | 21-3/16 | 5/8 6 pt. Star | | | 3.00/.149 | 5/16 | 1-1/4 | Xtended 100 |
| (2) for 42" cut, mulcher, deep deck - 1997 & after; auto-drive 1999 & after | **198-059** | 490-110-M115<br>7420616<br>742-0616A<br>942-0616<br>942-0616A<br>GW-7420616<br>OEM-742-0616 | 21-3/16 | 5/8 6 pt. Star | | | 2.75/.149 | 3/8 | 1-1/2 | Xtended 100 |
| Gator® G3™ | **98-629** | 742-04312<br>742-04410<br>742-4360<br>942-04308-X<br>942-04312<br>942-04312-X<br>942-04360-0684<br>942-04410<br>942-04410-0684<br>942-0616-X<br>942-4360 | 21-3/16 | 5/8 6 pt. Star | | | 2.50/.187 | 5/16 | 3/4 | G3 |
| Gator G5™ | **598-629** | | 21-3/16 | 5/8 6 pt. Star | | | 3.00/.164 | 5/16 | 1 | High-Lift Xtended Fusion® G5 |

B

# Blades - OEM Replacements

## Troy-Bilt (also see MTD)

| | OREGON | OEM No. | Length | Center | Outer | C to C | W / T | Off | Lift | Prod. Code |
|---|---|---|---|---|---|---|---|---|---|---|
| (2) for 46" cut, LTX1045, LTX1046, LTX1046VT | **98-096** | 490-110-C131<br>742-04244<br>742-04244A<br>742-04290<br>942-04244<br>942-04244A<br>942-04290 | **23-1/4** | 5/8<br>6 pt. Star | | | 3.75/.149 | 1/4 | 1-3/8 | |
| Gator G3 | **96-401** | 742-04290-X<br>742-04361<br>942-04244A-X<br>942-04244-X<br>942-04361 | 23-1/4 | 5/8<br>6 pt. Star | | | 3.00/.149 | 1/4 | 1 | G3 |

## Walker

| | | | | | | | | | | |
|---|---|---|---|---|---|---|---|---|---|---|
| (2) for 36" cut, (3) for 56" cut, (4) for 74" cut, side discharge | **91-911** | 5705-0<br>5705-1 | **20** | 5/8 | 3/16 | 3 | 2.75/.203 | 1-1/16 | 3/4 | |
| (1) 91-912 & (1) 91-913 for 42", rear discharge left-hand cut | **91-912** | 5705-4 | **22** | 5/8 | 3/16 | 3 | 2.75/.203 | 1-1/16 | 3/4 | |
| (1) 91-913 & (1) 91-912 for 42", rear discharge, right-hand cut, (3) for 62" cut, (2) for 42" cut, side discharge | **91-913** | 5705-3 | **22** | 5/8 | 3/16 | 3 | 2.75/.203 | 1-1/16 | 3/4 | |
| (1) 91-919 & (1) 91-920 for 48" cut, rear discharge, low-lift, left-hand cut | **91-919** | 7705-2 | **25** | 5/8 | 3/16 | 3 | 2.75/.203 | 1-1/16 | 3/4 | |
| (1) 91-917 & (1) 91-918 for 48" cut, rear discharge, high-lift, left-hand cut | **91-917** | | 25 | 5/8 | 3/16 | 3 | 2.75/.203 | 1-1/16 | 7/8 | |
| (1) 91-920 & (1) 91-919 for 48" cut, rear discharge, low-lift, right-hand cut | **91-920** | 7705-1 | **25** | 5/8 | 3/16 | 3 | 2.75/.203 | 1-1/16 | 3/4 | |
| (1) 91-918 & (1) 91-917 for 48" cut, rear discharge, high-lift, right-hand cut | **91-918** | | 25 | 5/8 | 3/16 | 3 | 2.75/.203 | 1-1/16 | 7/8 | |
| (1) 92-176 & (1) 91-177 for 52" cut, left-hand cut | **92-176** | 7705-7 | **27** | 5/8 | 3/16 | 3 | 2.75/.203 | 1-1/16 | 7/8 | |
| (1) 92-176 & (1) 91-177 for 52" cut, right-hand cut | **92-177** | 7705-6 | 27 | 5/8 | 3/16 | 3 | 2.75/.203 | 1-1/16 | 7/8 | |

B

## Woods

| | OREGON | OEM No. | Length | Center | Outer | C to C | W / T | Off | Lift | Prod. Code |
|---|---|---|---|---|---|---|---|---|---|---|
| | **91-767** | 24590<br>24590KT | **11-3/8** | 7/8 | | | 2.50/.250 | 7/16 | 1-1/4 | |
| (6) for 44" cut | | | | | | | Xtended | | | |
| | **91-557** | 70014<br>7014KT | **15** | 1/2 | | | 2.50/.250 | 5/16 | 3/4 | |
| (3) for 44" cut, (1) 91-557 & (2) 91-558 for 48" cut, 1250, 1850, 1855, 2855, 5120, 5140, 5180, 5182, 5200, 5210, 5215, 5250, 6170, D4414, D4414-3, D14414T, D4818-2, DM4415, DM5219, DO4814, DO4818-3, DO4818T Mow`n Machine | | | | | | | | | | |
| 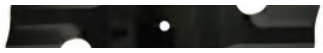 | **91-536** | | 15 | 1/2 | | | 2.50/.250 | 5/16 | 1 | |
| (3) for 44" cut, (1) 91-557 & (2) 91-558 for 48" cut, high-lift, 1250, 1850, 1855, 2855, 5120, 5140, 5180, 5182, 5200, 5210, 5215, 5250, 6170, D4414, D4414-3, D14414T, D4818-2, DM4415, DM5219, DO4814, DO4818-3, DO4818T Mow`n Machine | | | | | | | | | | |
| | **92-150** | | 15 | 1/2 | | | 2.50/.203 | 5/16 | 1-1/4 | |
| (3) for 44" cut, 1250, 1850, 1855, 2855, 5120, 5140, 5180, 5182, 5200, 5210, 5215, 5250, 6170, D4414, D4414-3, D14414T, D4818-2, DM4415, DM5219, DO4814, DO4818-3, DO4818T Mow`n Machine | | | | | | | | | | |
| | **96-343** | 70062KT<br>72896KT | 15 | 1/2 | | | 2.50/.203 | 5/16 | 1 | |
| Gator® G3™ | | | | | | | Xtended | | | G3 |
| | **396-713** | | 15 | 1/2 | | | 3.00/.250 | 5/16 | 1 | |
| Gator G6® | | | | | | | Heavy-Duty High-Lift Xtended Fusion® | | | G6 |
| | **91-558** | 70104KT<br>72897KT | **18** | 1/2 | | | 2.50/.250 | 5/16 | 3/4 | |
| (3) for 52" cut, (2) 91-558 & (1) 91-557 for 48" cut | | | | | | | | | | |
| | **91-535** | 70117KT<br>72896KT | 18 | 1/2 | | | 2.50/.250 | 5/16 | 1-3/16 | |
| (3) for 52" cut, contour blade | | | | | | | | | | |
| | **91-532** | | 18 | 1/2 | | | 2.50/.250 | 5/16 | 1 | |
| (3) for 52" cut, (2) 91-532 & (1) 91-536 for 48" cut, high-lift | | | | | | | | | | |
| | **91-538** | 72505KT<br>72904KT | 18 | 1/2 | | | 2.50/.203 | 0 | 1 | |
| (3) for 52" cut, mulching | | | | | | | | | | |

GROUP CONTINUES

B

# Blades - OEM Replacements

## Woods

| | OREGON | OEM No. | Length | Center | Outer | C to C | W / T | Off | Lift | Prod. Code |
|---|---|---|---|---|---|---|---|---|---|---|
| | | | GROUP CONTINUES | | | | | | | |
| Gator G3 | **96-329** | | 18 | 1/2 | | | 2.50/.203 | 5/16 | 1 | G3 |
| Gator G5™ | **596-329** | | 18 | 1/2 | | | 3.00/.203 | 5/16 | 1 | High-Lift Xtended Fusion® G5 |
| Gator G6 | **396-729** | | 18 | 1/2 | | | 3.00/.250 | 5/16 | 1 | Heavy-Duty High-Lift Xtended Fusion® G6 |
| (3) for 60" cut, left-hand cut, fits models RM500, F35, RM59 | **91-761** | 23825<br>23825KT<br>31359<br>31359KT | **20-3/16** | 5/8 | | | 2.00/.203 | 13/16 | 3/4 | |
| (3) for 60" cut, medium lift, model 59C2 | **91-762** | 6950<br>6950KT | 20-3/16 | 5/8 | | | 2.00/.203 | 13/16 | 11/16 | |
| (3) for 60" cut | **92-159** | 08899100CKT | **20-1/2** | 5/8 | | | 2.50/.250 | 5/16 | 1-1/8 | |
| Gator® G5™ | **596-815** | 09246600CKT | 20-1/2 | 5/8 | | | 3.00/.203 | 5/16 | 1 | High-Lift Xtended Fusion® G5 |
| Gator G6® | **396-807** | | 20-1/2 | 5/8 | | | 3.00/.250 | 5/16 | 1 | Heavy-Duty High-Lift Xtended Fusion® G6 |
| | **91-584** | 1001513<br>1001513KT | **20-15/16** | 1 | 1/2 | 5 | 2.50/.250 | 7/16 | 1 | |
| (3) for 61" cut, (2) for 41" cut | **91-531** | | **21** | 1/2 | | | 2.50/.250 | 5/16 | 1 | |
| (3) for 61" cut, (2) for 41" cut, high-lift | **91-534** | 70142KT | 21 | 1/2 | | | 2.50/.250 | 5/16 | 1-3/16 | |
| (3) for 61" cut, (2) for 41" cut, extreme high-lift | **91-537** | | 21 | 1/2 | | | 3.00/.250 | 5/16 | 1-1/4 | |

GROUP CONTINUES

## Woods

| | OREGON | OEM No. | Length | Center | Outer | C to C | W / T | Off | Lift | Prod. Code |
|---|---|---|---|---|---|---|---|---|---|---|
| (3) for 61" cut, (2) for 41" cut, low-lift | **91-547** | 70134<br>70134KT | 21 | 1/2 | | | 2.50/.250 | 5/16 | 3/4 | |
| (3) for 61" cut, (2) for 41" cut, mulching | **91-539** | 72517KT | 21 | 1/2 | | | 2.50/.203 | 0 | 1 | |
| Gator G3™ | **96-346** | | 21 | 1/2 | | | 2.50/.203 | 5/16 | 1 | G3 |
| Gator G5 | **596-346** | | 21 | 1/2 | | | 3.00/.203 | 5/16 | 1 | High-Lift Xtended Fusion® G5 |
| Gator G6 | **396-712** | | 21 | 1/2 | | | 3.00/.250 | 5/16 | 1 | Heavy-Duty High-Lift Xtended Fusion® G6 |
| (3) for 72" cut, left-hand cut, fits models L306, RM306, RM600 | **91-764** | 13404<br>13404KT<br>31306<br>31306KT | **24-7/16** | 1 | | | 2.50/.203 | 3/4 | 1-3/16 | |
| (3) for 72" cut | **91-766** | 15127<br>15127CKT<br>15127KT<br>65172 | **24-5/8** | 5/8 | | | 2.50/.250 | 0 | 7/8 | Xtended |
| (3) for 72" cut, PRD7200, RD72, RD7200, RD7200-2 | **91-585** | 10081899KT2<br>1008199<br>1008199KT | **24-15/16** | 1 | 1/2 | 5 | 2.50/.250 | 3/8 | 1 | |
| Gator® G5™ | **591-585** | | 24-15/16 | 1 | 1/2 | 5 | 3.00/.203 | 3/8 | 1 | High-Lift Xtended Fusion® G5 |

## Wright Stander

| | | | | | | | | | | |
|---|---|---|---|---|---|---|---|---|---|---|
| (3) for 48" cut, (2) for 32" cut, Sentar2, Sentar3, Sentar Sport, Stander | **91-620** | 71440002 | **16-1/2** | 5/8 | | | 2.50/.203 | 0 | 1 | Xtended |
| (3) for 48" cut, (2) for 32" cut, high-lift, Sentar2, Sentar3, Sentar Sport, Stander | **91-621** | | 16-1/2 | 5/8 | | | 3.00/.203 | 0 | 1-1/2 | |
| (3) for 48" cut, (2) for 32" cut, low-lift, Sentar2, Sentar3, Sentar Sport, Stander | **92-207** | | 16-1/2 | 5/8 | | | 2.50/.203 | 0 | 13/16 | Xtended |

GROUP CONTINUES

B

# Blades - OEM Replacements

## Wright Stander

| | OREGON | OEM No. | Length | Center | Outer | C to C | W / T | Off | Lift | Prod. Code |
|---|---|---|---|---|---|---|---|---|---|---|
| | | | GROUP CONTINUES | | | | | | | |
| (3) for 48" cut, (2) for 32" cut, mulching, Sentar2, Sentar3, Sentar Sport, Stander | **92-743** | | 16-1/2 | 5/8 | | | 2.50/.203 | 0 | 1 | Xtended |
| (3) for 48" cut, (2) for 32" cut, Sentar2, Sentar3, Sentar Sport, Stander | **92-036** | | 16-1/2 | 5/8 | | | 2.50/.250 | 0 | 1 | |
| (3) for 48" cut, (2) for 32" cut, Sentar2, Sentar3, Sentar Sport, Stander | **92-145** | | 16-1/2 | 5/8 | | | 2.50/.203 | 0 | 1 | |
| (3) for 48" cut, (2) for 32" cut, Sentar2, Sentar3, Sentar Sport, Stander | **92-737** | | 16-1/2 | 5/8 | | | 2.50/.203 | 0 | 1-1/16 | Xtended |
| (3) for 48" cut, (2) for 32" cut, Sentar2, Sentar3, Sentar Sport, Stander | **99-126** | | 16-1/2 | 5/8 | | | 2.50/.203 | 0 | 1-1/16 | |
| Gator® G3™ | **96-308** | | 16-1/2 | 5/8 | | | 2.50/.203 | 0 | 1 | G3 |
| Gator G5™ | **596-308** | | 16-1/2 | 5/8 | | | 3.00/.203 | 0 | 1 | High-Lift Xtended Fusion® G5 |
| Gator G6® | **396-735** | | 16-1/2 | 5/8 | | | 3.00/.250 | 0 | 1 | Heavy-Duty High-Lift Xtended Fusion® G6 |
| (3) for 48" cut, Sport X, Stander X | **92-165** | 71440004<br>71440008 | **16-1/2** | 5/8 | | | 2.50/.203 | 1/2 | 1 | Xtended |
| Gator G6 | **392-165** | | 16-1/2 | 5/8 | | | 3.00/.250 | 1/2 | 1 | Heavy-Duty High-Lift Xtended Fusion® G6 |
| (2) for 36" cut, (3) for 52" cut | **91-622** | 71440001 | **18** | 5/8 | | | 2.50/.203 | 0 | 1 | Xtended |
| (2) for 36" cut, (3) for 52" cut, high-lift | **91-623** | | 18 | 5/8 | | | 3.00/.203 | 0 | 1-1/2 | Xtended |
| | | | GROUP CONTINUES | | | | | | | |

B

## Wright Stander

| | OREGON | OEM No. | Length | Center | Outer | C to C | W / T | Off | Lift | Prod. Code |
|---|---|---|---|---|---|---|---|---|---|---|
| | | | GROUP CONTINUES | | | | | | | |
| (2) for 36" cut, (3) for 52" cut, low-lift | 91-235 | | 18 | 5/8 | | | 2.50/.250 | 0 | 7/8 | Xtended |
| (2) for 36" cut, (3) for 52" cut, mulcher | 91-335 | | 18 | 5/8 | | | 2.50/.203 | 0 | 1 | Xtended |
| (2) for 36" cut, (3) for 52" cut, mulcher | 91-218 | | 18 | 5/8 | | | 2.50/.164 | 0 | 1 | Xtended |
| (2) for 36" cut, (3) for 52" cut | 91-181 | | 18 | 5/8 | | | 2.50/.187 | 0 | 1 | Xtended |
| (2) for 36" cut, (3) for 52" cut | 91-184 | | 18 | 5/8 | | | 2.50/.250 | 0 | 1 | Xtended |
| (2) for 36" cut, (3) for 52" cut | 91-256 | | 18 | 5/8 | | | 2.50/.203 | 0 | 1 | Xtended |
| (2) for 36" cut, (3) for 52" cut | 91-312 | | 18 | 5/8 | | | 2.50/.203 | 0 | 1 | Xtended |
| (2) for 36" cut, (3) for 52" cut | 91-637 | | 18 | 5/8 | | | 2.50/.203 | 0 | 1 | |
| (2) for 36" cut, (3) for 52" cut | 94-053 | | 18 | 5/8 | | | 2.50/.250 | 0 | 1 | |
| Gator® G3™ | 96-344 | | 18 | 5/8 | | | 2.50/.203 | 0 | 3/4 | G3 |
| Gator G5™ | 596-344 | | 18 | 5/8 | | | 3.00/.203 | 0 | 1 | High-Lift Xtended Fusion® G5 |
| Gator G6® | 396-726 | | 18 | 5/8 | | | 3.00/.250 | 0 | 1 | Heavy-Duty High-Lift Xtended Fusion® G6 |
| (3) for 52" cut, StanderX, SportX | 91-039 | 71440005<br>71440009 | 18 | 5/8 | | | 2.50/.203 | 1/2 | 1 | |
| (3) for 52" cut, high-lift, StanderX, SportX | 93-010 | | 18 | 5/8 | | | 2.50/.203 | 1/2 | 1-1/8 | Xtended |
| | | | GROUP CONTINUES | | | | | | | |

B

# Blades - OEM Replacements

## Wright Stander

GROUP CONTINUES

| | OREGON | OEM No. | Length | Center | Outer | C to C | W / T | Off | Lift | Prod. Code |
|---|---|---|---|---|---|---|---|---|---|---|
| Gator G3 | 93-601 | | 18 | 5/8 | | | 2.50/.203 | 1/2 | 3/4 | G3 |
| Gator G5 | 593-601 | | 18 | 5/8 | | | 3.00/.203 | 1/2 | 1 | High-Lift Xtended Fusion® G5 |
| Gator G6 | 393-601 | | 18 | 5/8 | | | 3.00/.250 | 1/2 | 1 | Heavy-Duty High-Lift Xtended Fusion® G6 |
| (3) for 61" cut, (2) for 42" cut, all models | 91-626 | 71440003 | 21 | 5/8 | | | 2.50/.203 | 0 | 1 | |
| (3) for 61" cut, (2) for 42" cut, mulching, all models | 91-596 | | 21 | 5/8 | | | 2.50/.203 | 0 | 1 | |
| Gator® G3™ | 96-347 | | 21 | 5/8 | | | 2.50/.203 | 0 | 3/4 | G3 |
| Gator G5™ | 596-347 | | 21 | 5/8 | | | 3.00/.203 | 0 | 1 | High-Lift Xtended Fusion® G5 |
| Gator G6® | 396-727 | | 21 | 5/8 | | | 3.00/.250 | 0 | 1 | Heavy-Duty High-Lift Xtended Fusion® G6 |
| (3) for 61" cut, Sport X, Stander X | 91-135 | 71440007<br>71440010 | 21 | 5/8 | | | 2.50/.203 | 1/2 | 1 | |
| (3) for 61" cut, high-lift Sport X, Stander X | 93-011 | | 21 | 5/8 | | | 2.50/.250 | 1/2 | 1-1/8 | Xtended |
| (3) for 61" cut, low-lift Sport X, Stander X | 93-013 | | 21 | 5/8 | | | 2.50/.250 | 1/2 | 5/8 | Xtended |
| Gator G3 | 96-702 | | 21 | 5/8 | | | 2.50/.203 | 1/2 | 1 | G3 |
| Gator G5 | 596-702 | | 21 | 5/8 | | | 3.00/.203 | 1/2 | 1 | High-Lift Xtended Fusion® G5 |
| Gator G6 | 396-702 | | 21 | 5/8 | | | 3.00/.250 | 1/2 | 1 | Heavy-Duty High-Lift Xtended Fusion® G6 |

B

## Zipper

| | OREGON | OEM No. | Length | Center | Outer | C to C | W / T | Off | Lift | Prod. Code |
|---|---|---|---|---|---|---|---|---|---|---|
| (3) for 64" cut | **91-598** | 10090295 | **22-3/16** | 1/2 | | | 2.50/.250 | 0 | 1 | |
| Gator G6 | **391-598** | 1009049-5<br>1009068-5 | 22-3/16 | 1/2 | | | 3.00/.250 | 0 | 1 | Heavy-Duty High-Lift Xtended Fusion® G6 |
| (3) for 74" cut | **91-034** | | **25** | 1/2 | | | 2.25/.250 | 0 | 1 | |
| (3) for 74" cut, mulching | **92-164** | | 25 | 1/2 | | | 2.50/.203 | 0 | 1 | |
| Gator G6® | **396-737** | 10090525<br>10090545<br>10090575 | 25 | 1/2 | | | 3.00/.250 | 0 | 1 | Heavy-Duty High-Lift Xtended Fusion® G6 |

B

# Blade Edgers

## Ariens

| | OREGON | OEM No. | Length | Center | Type** | Design* | Width | Thickness | Product Code |
|---|---|---|---|---|---|---|---|---|---|
| | **40-130** | 03789800 | 9 | 1/2 | NS | SC | 2 | .090 | |
| | | Fits model: 986101, 986103, & 986501 | | | | | | | |

## Black+Decker

| | | | | | | | | | |
|---|---|---|---|---|---|---|---|---|---|
| | **40-121** | 82-024 | 7-5/8 | 7/16 | NS | SC | 1-1/2 | .090 | |
| | | Fits model: 8224 | | | | | | | |
| | **40-519** | 243801-00<br>243797-00 | 7-3/4 | 1/2 | NS | - | 2-3/4 | .090 | |
| | | Fits model: E750 Edge Hog | | | | | | | |

## Earth Quake & Powermate

| | | | | | | | | | |
|---|---|---|---|---|---|---|---|---|---|
| | **40-110** | 400009 | 9 | 1/2 x 7/16 | NS | SC | 2 | .090 | |
| | | Fits models: PWLE0799, PWLE1639 | | | | | | | |

## Echo

| | | | | | | | | | |
|---|---|---|---|---|---|---|---|---|---|
| | **40-139** | | 8 | 1 | NS | SC | 2 | .120 | |
| | | Economy | | | | | | | |
| | **40-140** | 720237001<br>69601552632 | 8 | 1 | NS | SC | 2 | .090 | |
| | | Fits models: PAS-225, PAS-230, PAS-266, PAS-280, PE-200, PE-2000, PE-201, PE-2201, PE-225, PE-230, PE-231, PE-2400, PE-260, PE-2601, PE-261, PE-265, PE-265S, PE-266, PE-266S, PE-280, PE-3100, PE-311, PE-2620 | | | | | | | |
| | **40-141** | 69601552631 | 8 | 1 | NS | SC | 2 | .120 | |
| | **40-147** | 69601553630 | 8 | 1 | NS | SC | 2 | .187 | |

## Homelite

| | | | | | | | | | |
|---|---|---|---|---|---|---|---|---|---|
| | **40-142** | D04359<br>D04359A<br>UP06765 | 9 | 1 | NS | SC | 2 | .090 | |
| | | Fits models: PSE3000, E200, BC2500AZSB, BC900, C300, EA250, F2040, ST725, D825CA, xpand-It, Expand-It Plus, Expand-It 3-in-1 | | | | | | | |

**Types

| | |
|---|---|
| **NS** | Not Sharpened |
| **S2** | Sharpened, 2-sides |
| **S4** | Sharpened, 4-sides |

*Designs

| | |
|---|---|
| **AC** | Angle Cut Edge |
| **RE3T** | Rounded Edges, 3-teeth |
| **SC** | Straight Cut Edge |

**Note:** All edger blades are heat treated to provide maximum life and durability (except 40-139).

B

## Husqvarna

| | OREGON | OEM No. | Length | Center | Type** | Design* | Width | Thickness | Product Code |
|---|---|---|---|---|---|---|---|---|---|
| | **40-141** | 503848202<br>531004044<br>505175301<br>531300233 | 8 | 1 | NS | SC | 2 | .120 | |
| | | Fits models: 123L, 125E, 125LD, 225E, 225LD, 225RD, 232L, 232RBD, 233RBD, 240RBD, 322E, 322E, 323E, 323EX, 325E, 325EX, 326E, 326ES, 326EX, 327ES, 426EX, 525ES | | | | | | | |
| | **40-502** | 505289963 | 9 | 1/2 | S2 | SC | 2 | .149 | |
| | | Fits model: LE475 | | | | | | | |
| | **40-411** | 601001974<br>601002454 | 9 | 5/8 | S4 | AC | 2 | .120 | |
| | | Fits models: LE359, LE309 | | | | | | | |

## Jacobsen

| | | | | | | | | | |
|---|---|---|---|---|---|---|---|---|---|
| | **40-807** | 309444 | 9 | 1/2 | NS | | 9 | .090 | |
| | | Outside hole dia.: 5/16, center to center: 3-1/4 c-c, 8-tooth round | | | | | | | |

## John Deere

| | | | | | | | | | |
|---|---|---|---|---|---|---|---|---|---|
| | **40-502** | M47147 | 9 | 1/2 | S2 | SC | 2 | .149 | |
| | | Fits models: #2, #3, 3K, and E35 edgers | | | | | | | |

## Kawasaki

| | | | | | | | | | |
|---|---|---|---|---|---|---|---|---|---|
| | **40-141** | 59074-2053A<br>59074-2053 | 8 | 1 | NS | SC | 2 | .120 | |
| | | Fits models: HE026A, HE027A, KEL27B, KEL27BC, KME01A | | | | | | | |

## Lawn Boy

| | | | | | | | | | |
|---|---|---|---|---|---|---|---|---|---|
| | **40-502** | 603687 | 9 | 1/2 | S2 | SC | 2 | .149 | |

## Lesco

| | | | | | | | | | |
|---|---|---|---|---|---|---|---|---|---|
| | **40-141** | 73974 | 8 | 1 | NS | SC | 2 | .120 | |

## Little Wonder

| | | | | | | | | | |
|---|---|---|---|---|---|---|---|---|---|
| | **40-409** | 129 | 10 | 1/2 | S4 | SC | 2 | .120 | |
| | | Fits models: 5001, 5002, 6001, 6002, 6031, 6032, 6001IC, 6001K, 6002IC, 6002K, 6031IC, 6031K, 6032IC, 6032K, 6033 | | | | | | | |

| **Types | |
|---|---|
| **NS** | Not Sharpened |
| **S2** | Sharpened, 2-sides |
| **S4** | Sharpened, 4-sides |

| *Designs | |
|---|---|
| **AC** | Angle Cut Edge |
| **RE3T** | Rounded Edges, 3-teeth |
| **SC** | Straight Cut Edge |

**Note:** **All edger blades are heat treated to provide maximum life and durability (except 40-139).**

B

# Blade Edgers

| | OREGON | OEM No. | Length | Center | Type** | Design* | Width | Thickness | Product Code |
|---|---|---|---|---|---|---|---|---|---|
| **McCulloch** | | | | | | | | | |
| | **40-144** | 301272<br>301272-00 | 7-3/4 | 1 | NS | SC | 2 | .120 | |
| Fits models: ELE80, Titan 2380, MAC328, Promac (2320L, 2335I, 2635B, GLE2600) | | | | | | | | | |
| **McLane** | | | | | | | | | |
| | **40-130** | 2059 | 9 | 1/2 | NS | SC | 2 | .090 | |
| Fits model: 100-series | | | | | | | | | |
| | **40-131** | 2059-10 | 10 | 1/2 | NS | SC | 2 | .090 | |
| Fits models: 200 & 300 series | | | | | | | | | |
| | **40-502** | 2059HD | 9 | 1/2 | S2 | SC | 2 | .149 | |
| **Maruyama** | | | | | | | | | |
| | **40-141** | 69601552631<br>216062<br>840084 | 8 | 1 | NS | SC | 2 | .120 | |
| Fits models: ED2321, ED2621, E27, E30S | | | | | | | | | |
| **MTD** | | | | | | | | | |
| | **40-316** | 781-0080<br>781-0080-0637<br>787-01503 | 9 | 5/8 | NS | RE3T | 2-1/2 | .090 | |
| Fits models: 500-600 series edgers | | | | | | | | | |
| | **40-141** | 791-613223B<br>791-613223 | 8 | 1 | NS | SC | 2 | .120 | |
| Fits models: LE720, LE720R, CL25LE, 725RE, 770REB, 720REB, 41ADZ2CC799, 41AJLE-C799, 41BJLE-C799, 720r DE | | | | | | | | | |
| | **40-009** | 781-0748<br>781-0748-0637 | 9 | 5/8 | NS | RE3T | 9 | .090 | |
| **Power Trim** | | | | | | | | | |
| | **40-130** | - | 9 | 1/2 | NS | SC | 2 | .090 | |
| Fits model: 100-series | | | | | | | | | |
| | **40-131** | 310 | 10 | 1/2 | NS | SC | 2 | .090 | |
| Fits models: 150, 200, 200-4, 200-8, 200-H, 208-H, 208-V, 300-IC, 308-IC, 300-H, 308-H | | | | | | | | | |
| | **40-132** | - | 12 | 1/2 | NS | SC | 2 | .090 | |
| Golf course application | | | | | | | | | |

| **Types | |
|---|---|
| **NS** | Not Sharpened |
| **S2** | Sharpened, 2-sides |
| **S4** | Sharpened, 4-sides |

| *Designs | |
|---|---|
| **AC** | Angle Cut Edge |
| **RE3T** | Rounded Edges, 3-teeth |
| **SC** | Straight Cut Edge |

**Note:** All edger blades are heat treated to provide maximum life and durability (except 40-139).

B

## Red Max

| | OREGON | OEM No. | Length | Center | Type** | Design* | Width | Thickness | Product Code |
|---|---|---|---|---|---|---|---|---|---|
| | **40-140** | 6367-15110<br>521453001<br>180064<br>Z6367-15110<br>505175301<br>613223 | 8 | 1 | NS | SC | 2 | .090 | |
| | | Fits models: EXZ2460S, HE2200LDC, HE2600, HE261, HEZ2460F, HEZ2460S, HEZ2601S, HEZ2610F, HEZ2650F, HEZ3060E, HEZ3060S | | | | | | | |

## Ryobi

| | | | | | | | | | |
|---|---|---|---|---|---|---|---|---|---|
| | **40-143** | 613223<br>791-613223<br>791-613223B | 7-3/4 | 1 | NS | SC | 2 | .149 | |
| | | Fits models: 130ER, 720ER, 720R, 725RE, 770REB, LE720R, LE720TP | | | | | | | |

## Sears / Craftsman

| | | | | | | | | | |
|---|---|---|---|---|---|---|---|---|---|
| | **40-845** | | 9 | 5/8 | NS | - | 9 | .090 | |
| | | Curvature of blade prevents clogging | | | | | | | |
| | **40-402** | 740297<br>740297MA<br>85755MA | 9 | 1/2 | S4 | S2 | 2 | .120 | |
| | | Fits models: EV3550 and EV3850 | | | | | | | |
| | **40-951** | 85757 | 7-1/8 | 1/4 | NS | SC | 1-1/2 | .062 | |
| | | Includes locking plate | | | | | | | |

## Shindaiwa

| | | | | | | | | | |
|---|---|---|---|---|---|---|---|---|---|
| | **40-141** | 69601552631<br>69601552630<br>69601552632<br>99909-0020 | 8 | 1 | NS | SC | 2 | .120 | |
| | | Fits models: 80544, LE230, LE231, LE242, LE250, LE2510, LE254, LE260, LE261, LHE2475 | | | | | | | |

## Stihl

| | | | | | | | | | |
|---|---|---|---|---|---|---|---|---|---|
| | **40-144** | 301272 | 7-3/4 | 1 | NS | SC | 2 | .120 | |
| | **40-141** | 4133 713 4101<br>4133 713 4102 | 8 | 1 | NS | SC | 2 | .120 | |
| | | Fits models: All FC models | | | | | | | |

| **Types | | *Designs | |
|---|---|---|---|
| **NS** | Not Sharpened | **AC** | Angle Cut Edge |
| **S2** | Sharpened, 2-sides | **RE3T** | Rounded Edges, 3-teeth |
| **S4** | Sharpened, 4-sides | **SC** | Straight Cut Edge |

**Note:** **All edger blades are heat treated to provide maximum life and durability (except 40-139).**

B

# Blade Edgers

## Tanaka

| | OREGON | OEM No. | Length | Center | Type** | Design* | Width | Thickness | Product Code |
|---|---|---|---|---|---|---|---|---|---|
| | **40-503** | 43533110200<br>6690192 | 10 | 1/2 | S2 | SC | 2 | .149 | |
| | | Fits models: TLE-500, TLE-550, TLE-600, 550 edger | | | | | | | |
| | **40-141** | 6690193<br>4353729020<br>301272<br>323619 | 8 | 1 | NS | SC | 2 | .120 | |
| | | Fits models: TPE-250, TPE-2501, TPE-250PF, TPR-2510, TPE-260PF, TPE-270PF, TPE-270PN, TBC-255SKF, TBC-SF | | | | | | | |

## Troy-Bilt

| | | | | | | | | | |
|---|---|---|---|---|---|---|---|---|---|
| | **40-004** | 753-06561<br>781-0080-0637 | 9 | 5/8 | NS | SC | 2 | .090 | |
| | | Fits model: TB516EC | | | | | | | |
| | **40-143** | 613223<br>791-613223<br>791-613223B | 7-3/4 | 1 | NS | SC | 2 | .149 | |
| | **40-009** | 781-0748<br>781-0748-0637 | 9 | 5/8 | NS | RE3T | 9 | .090 | |
| | | Fits model: TB554 | | | | | | | |

## Weedeater

| | | | | | | | | | |
|---|---|---|---|---|---|---|---|---|---|
| | **40-010** | 952701674 | 8-3/4 | 9/16-D | NS | SC | 1-1/2 | .090 | |

## Star Edger Blades

| OREGON | Center Length | Hole | **Type | *Design | Width | Thickness | Product Code |
|---|---|---|---|---|---|---|---|
| **40-840** | 8 circular | 1 | NS | -- | 8 | .090 | |
| **40-843** | 9 circular | 1/2 | NS | -- | 9 | .090 | |
| **40-845** | 9 circular | 5/8 | NS | -- | 9 | .090 | |

Curvature of blade prevents clogging

## Stick Edger Blades

| OREGON | Description | Center Length | Hole | **Type | *Design | Width | Thickness | Product Code |
|---|---|---|---|---|---|---|---|---|
| **40-002** | Magnum | 8 | 1 | NS | SC | 2 | .090 | |
| **40-140** | | 8 | 1 | NS | SC | 2 | .090 | |
| **40-141** | | 8 | 1 | NS | SC | 2 | .120 | |
| **40-139** | Economy | 8 | 1 | NS | SC | 2 | .120 | |
| **40-147** | | 8 | 1 | NS | SC | 2 | .187 | |

| **Types | |
|---|---|
| **NS** | Not Sharpened |
| **S2** | Sharpened, 2-sides |
| **S4** | Sharpened, 4-sides |

| *Designs | |
|---|---|
| **AC** | Angle Cut Edge |
| **RE3T** | Rounded Edges, 3-teeth |
| **SC** | Straight Cut Edge |

**Note:** All edger blades are heat treated to provide maximum life and durability (except 40-139).

## Angle-Beveled Edger Blades

| OREGON | Length | Center Hole | **Type | *Design | Width | Thickness | Product Code |
|---|---|---|---|---|---|---|---|
| 40-408 | 9 | 3/8 | S4 | AC | 2 | .120 | |
| 40-402 | 9 | 1/2 | S4 | AC | 2 | .120 | |
| 40-411 | 9 | 5/8 | S4 | AC | 2 | .120 | |
| 40-403 | 10 | 1/2 | S4 | AC | 2 | .120 | |

## Magnum Edger™ Blades

| OREGON | Length | Center Hole | **Type | *Design | Width | Thickness | Product Code |
|---|---|---|---|---|---|---|---|
| 40-002 | 8 | 1 | NS | SC | 2 | .090 | |
| 40-004 | 9 | 5/8 | NS | SC | 2 | .090 | |

## Heavy-Duty Edger Blades

| OREGON | Length | Center Hole | **Type | *Design | Width | Thickness | Product Code |
|---|---|---|---|---|---|---|---|
| 40-502 | 9 | 1/2 | S2 | SC | 2 | .149 | |
| 40-514 | 9 | 5/8 | S2 | SC | 2 | .149 | |
| 40-503 | 10 | 1/2 | S2 | SC | 2 | .149 | |
| 40-518 | 10 | 5/8 | S2 | SC | 2 | .149 | |

## Edger Blades by Length

| OREGON | Length | Center Hole | **Type | *Design | Width | Thickness |
|---|---|---|---|---|---|---|
| 40-951 | 7-1/8 | 1/4 | NS | SC | 1-1/2 | 0.062 |
| 40-121 | 7-5/8 | 7/16 | NS | SC | 1-1/2 | 0.090 |
| 40-144 | 7-3/4 | 1 | NS | SC | 2 | 0.120 |
| 40-143 | 7-3/4 | 1 | NS | SC | 2 | 0.149 |
| 40-140 | 8 | 1 | NS | SC | 2 | 0.090 |
| 40-840 | 8 | 1 | NS | — | 8 | 0.090 |
| 40-002 | 8 | 1 | NS | SC | 2 | 0.090 |
| 40-141 | 8 | 1 | NS | SC | 2 | 0.120 |
| 40-139 | 8 | 1 | NS | SC | 2 | 0.120 |
| 40-147 | 8 | 1 | NS | SC | 2 | 0.187 |
| 40-010 | 8-3/4 | 9/16 D | NS | SC | 1-1/2 | 0.090 |
| 40-408 | 9 | 3/8 | S4 | AC | 2 | 0.120 |
| 40-130 | 9 | 1/2 | NS | SC | 2 | 0.090 |
| 40-807 | 9 | 1/2 | NS | — | 9 | 0.090 |
| 40-843 | 9 | 1/2 | NS | — | 9 | 0.090 |
| 40-402 | 9 | 1/2 | S4 | AC | 2 | 0.120 |
| 40-502 | 9 | 1/2 | S2 | SC | 2 | 0.149 |
| 40-004 | 9 | 5/8 | NS | SC | 2 | 0.090 |
| 40-316 | 9 | 5/8 | NS | RE3T | 2-1/2 | 0.090 |
| 40-009 | 9 | 5/8 | NS | RE3T | 9 | 0.090 |
| 40-845 | 9 | 5/8 | NS | — | 9 | 0.090 |
| 40-411 | 9 | 5/8 | S4 | AC | 2 | 0.120 |
| 40-514 | 9 | 5/8 | S2 | SC | 2 | 0.149 |
| 40-142 | 9 | 1 | NS | SC | 2 | 0.090 |
| 40-131 | 10 | 1/2 | NS | SC | 2 | 0.090 |
| 40-403 | 10 | 1/2 | S4 | AC | 2 | 0.120 |
| 40-409 | 10 | 1/2 | S4 | SC | 2 | 0.120 |
| 40-503 | 10 | 1/2 | S2 | SC | 2 | 0.149 |
| 40-518 | 10 | 5/8 | S2 | SC | 2 | 0.149 |
| 40-132 | 12 | 1/2 | NS | SC | 2 | 0.090 |

| **Types | |
|---|---|
| **NS** | Not Sharpened |
| **S2** | Sharpened, 2-sides |
| **S4** | Sharpened, 4-sides |

| *Designs | |
|---|---|
| **AC** | Angle Cut Edge |
| **RE3T** | Rounded Edges, 3-teeth |
| **SC** | Straight Cut Edge |

**Note:** **All edger blades are heat treated to provide maximum life and durability (except 40-139).**

B

# Blade Edgers

| OREGON | Replaces | Description | Product Code |
|---|---|---|---|

## Bluebird

**40-707**
Bluebird 5201
Bluebird 539005201
Billy Goat 350205

**Flail Set - 52 pc. set**
For thatcher aerators
3-1/2" x 1" x 1/8" material
Hole diameter: .530"
Priced as a set

Fits models: 120B, F20B, C18

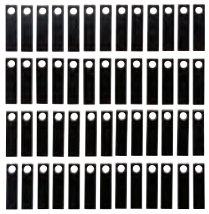

---

**41-008**
Bluebird 5002

**Power Rake Shaft**
Set of 4 with c-clips
Priced as a set
Diameter: 1/2", length between c-clips: 8-7/8"

---

**41-899**
Bluebird 108111

**Power Rake Shaft**
Set of 4 with c-clips
Fits PR22
Priced as a set
Diameter: 1/2", length between c-clips: 10-11/16"

---

**89-001**
Bluebird 0522361
Bluebird 7190
Bobcat 2701410
Bobcat 522361
Classen 100032
Exmark 121-4894
Ryan 2701410
Ryan 522361
Toro 121-4894
Toro T7112

**Aerator Tine**
1/2" closed spoon

## Exmark

**40-703**
Exmark 1-503031
Encore 253027

**Flail Set - 52 pc. set**
4-1/4" x 1" x 1/8" material
Hole diameter: .540"
Priced as a set

## EZ Rake

**43-025**
E-Z Rake 91010

**Dethatcher Spring**
Complete with plastic sleeve

B

Hydro oil level should not
exceed 1" cold
use S.A.E. 20W-20
KAWASAKI

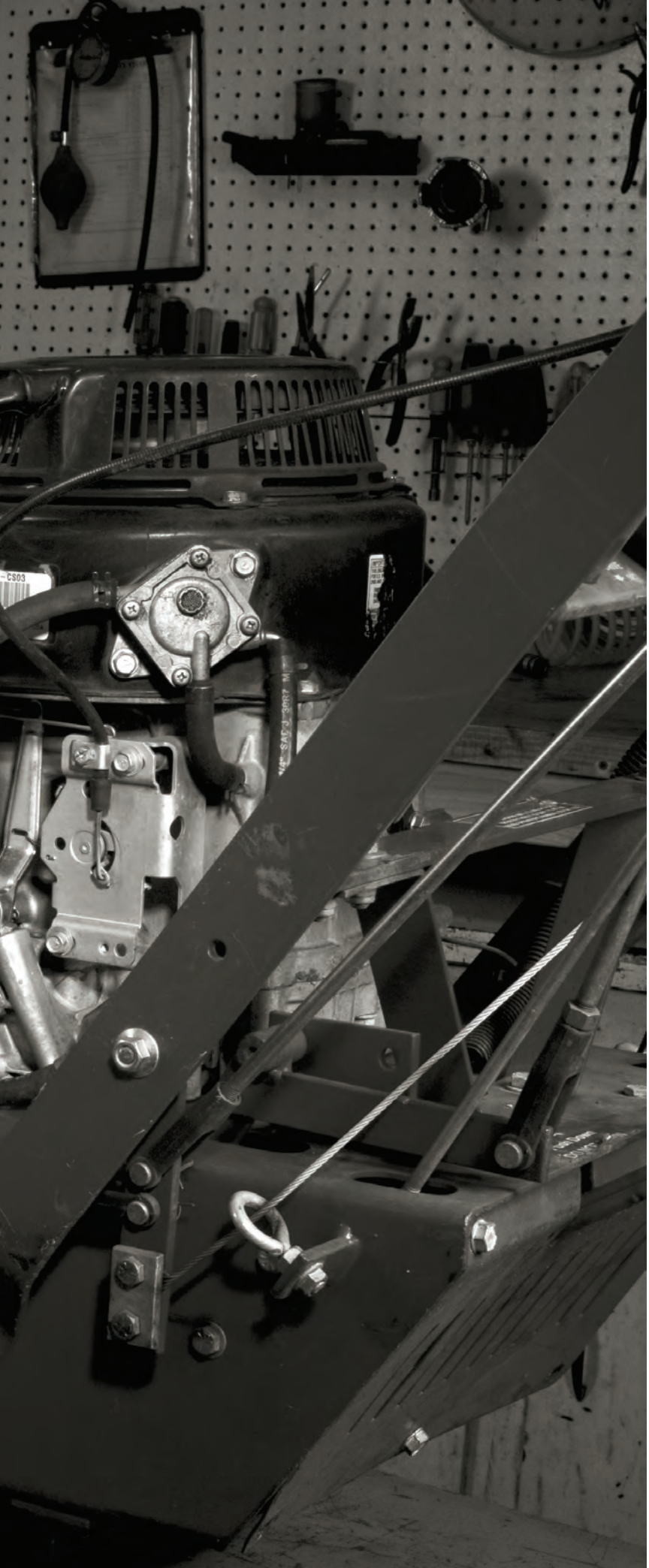

# SECTIONS C–N


Carburetor Parts . . . . . LG 592–674

Centrifugal Clutches . . . . . LG 675

Chain Roller Parts . . . . . LG 676

Chainsaw & Cut-Off Saw Parts . . . LG 677–693

Commercial Parts . . . . . LG 694–698

Control Cables . . . . . LG 699–723

Drive Parts. . . . . LG 724–728

Electrical Parts . . . . . LG 729–744

Engine Parts . . . . . LG 745–760

Fuel Line & Accessories. . . . . LG 761–780

Grass Bags . . . . . LG 781–782

Hedgetrimmer Parts . . . . . LG 783

Ignition Parts . . . . . LG 784–791

LInkage, Jacks, & Hardware . . . . LG 792–801

Miscellaneous Parts. . . . . LG 802–805

Mufflers . . . . . LG 806–811

# Carburetor Parts

## Tecumseh to Oregon® Carburetor Replacement Chart

| Tecumseh No. | OREGON No. | Carb Kit No. | Float No. | Inlet No. |
|---|---|---|---|---|
| 631612 | 50-650 | 49-428 | 49-242 | 49-244 |
| 631831 | 50-650 | 49-428 | 49-242 | 49-244 |
| 631902 | 50-650 | 49-428 | 49-242 | 49-244 |
| 632046 | 50-650 | 49-428 | 49-242 | 49-244 |
| 632050 | 50-650 | 49-428 | 49-242 | 49-244 |
| 632051 | 50-650 | 49-428 | 49-242 | 49-244 |
| 632052 | 50-650 | 49-428 | 49-242 | 49-244 |
| 632053 | 50-650 | 49-428 | 49-242 | 49-244 |
| 632055 | 50-650 | 49-428 | 49-242 | 49-244 |
| 632070 | 50-650 | 49-428 | 49-242 | 49-244 |
| 632078 | 50-650 | 49-428 | 49-242 | 49-244 |
| 632086 | 50-650 | 49-428 | 49-242 | 49-244 |
| 632087 | 50-650 | 49-428 | 49-242 | 49-244 |
| 632088 | 50-650 | 49-428 | 49-242 | 49-244 |
| 632098 | 50-650 | 49-428 | 49-242 | 49-244 |
| 632110 | 50-663 | 49-436 | 49-242 | 49-244 |
| 632113 | 50-662 | 49-436 | 49-242 | 49-244 |
| 632113A | 50-662 | 49-436 | 49-242 | 49-244 |
| 632214 | 50-650 | 49-428 | 49-242 | 49-244 |
| 632230 | 50-646 | 49-425 | 49-242 | 49-244 |
| 632272 | 50-646 | 49-425 | 49-242 | 49-244 |
| 632334A | 50-642 | 49-422 | 49-242 | 49-244 |
| 632349 | 50-650 | 49-428 | 49-242 | 49-244 |
| 632370 | 50-663 | 49-436 | 49-242 | 49-244 |
| 632370A | 50-663 | 49-436 | 49-242 | 49-244 |
| 632380 | 50-650 | 49-428 | 49-242 | 49-244 |
| 632387 | 50-650 | 49-428 | 49-242 | 49-244 |
| 632388 | 50-650 | 49-428 | 49-242 | 49-244 |
| 632389 | 50-650 | 49-428 | 49-242 | 49-244 |
| 632391 | 50-650 | 49-428 | 49-242 | 49-244 |
| 632420 | 50-650 | 49-428 | 49-242 | 49-244 |
| 632466 | 50-650 | 49-428 | 49-242 | 49-244 |
| 632467 | 50-650 | 49-428 | 49-242 | 49-244 |
| 632468 | 50-650 | 49-428 | 49-242 | 49-244 |
| 632575 | 50-650 | 49-428 | 49-242 | 49-244 |
| 632610 | 50-650 | 49-428 | 49-242 | 49-244 |
| 632611 | 50-650 | 49-428 | 49-242 | 49-244 |
| 632614 | 50-649 | 49-427 | 49-243 | – |
| 632615 | 50-647 | 49-426 | 49-242 | 49-244 |
| 632635 | 50-650 | 49-428 | 49-242 | 49-244 |
| 632644 | 50-650 | 49-428 | 49-242 | 49-244 |
| 632645 | 50-650 | 49-428 | 49-242 | 49-244 |
| 632646 | 50-650 | 49-428 | 49-242 | 49-244 |
| 632669 | 50-650 | 49-428 | 49-242 | 49-244 |
| 632670 | 50-650 | 49-428 | 49-242 | 49-244 |
| 632671A | 50-649 | 49-427 | 49-243 | – |
| 632671B | 50-649 | 49-427 | 49-243 | – |
| 632671C | 50-649 | 49-427 | 49-243 | – |
| 632678 | 50-650 | 49-428 | 49-242 | 49-244 |
| 632681 | 50-650 | 49-428 | 49-242 | 49-244 |
| 632733 | 50-650 | 49-428 | 49-242 | 49-244 |
| 632744 | 50-650 | 49-428 | 49-242 | 49-244 |
| 632747 | 50-650 | 49-428 | 49-242 | 49-244 |
| 632750 | 50-650 | 49-428 | 49-242 | 49-244 |
| 632769 | 50-650 | 49-428 | 49-242 | 49-244 |

| Tecumseh No. | OREGON No. | Carb Kit No. | Float No. | Inlet No. |
|---|---|---|---|---|
| 632772 | 50-650 | 49-428 | 49-242 | 49-244 |
| 632795 | 50-650 | 49-428 | 49-242 | 49-244 |
| 632795A | 50-650 | 49-428 | 49-242 | 49-244 |
| 633014 | 50-650 | 49-428 | 49-242 | 49-244 |
| 640004 | 50-653 | 49-431 | 49-242 | 49-244 |
| 640014 | 50-653 | 49-431 | 49-242 | 49-244 |
| 640017B | 50-651 | 49-429 | 49-242 | 49-244 |
| 640020 | 50-652 | 49-430 | 49-243 | – |
| 640020A | 50-652 | 49-430 | 49-243 | – |
| 640020B | 50-652 | 49-430 | 49-243 | – |
| 640023 | 50-655 | 49-433 | 49-242 | 49-244 |
| 640025 | 50-653 | 49-431 | 49-242 | 49-244 |
| 640025A | 50-653 | 49-431 | 49-242 | 49-244 |
| 640025B | 50-653 | 49-431 | 49-242 | 49-244 |
| 640025C | 50-653 | 49-431 | 49-242 | 49-244 |
| 640034A | 50-641 | 49-421 | 49-243 | – |
| 640051 | 50-655 | 49-433 | 49-242 | 49-244 |
| 640052 | 50-659 | 49-436 | 49-242 | 49-244 |
| 640054 | 50-659 | 49-436 | 49-242 | 49-244 |
| 640060 | 50-664 | 49-436 | 49-242 | 49-244 |
| 640060A | 50-664 | 49-436 | 49-242 | 49-244 |
| 640065 | 50-654 | 49-432 | 49-243 | – |
| 640065A | 50-654 | 49-432 | 49-243 | – |
| 640072 | 50-641 | 49-421 | 49-243 | – |
| 640072A | 50-641 | 49-421 | 49-243 | – |
| 640084B | 50-640 | 49-420 | 49-242 | 49-244 |
| 640140 | 50-655 | 49-433 | 49-242 | 49-244 |
| 640152A | 50-655 | 49-433 | 49-242 | 49-244 |
| 640159 | 50-641 | 49-421 | 49-243 | – |
| 640222 | 50-664 | 49-436 | 49-242 | 49-244 |
| 640222A | 50-664 | 49-436 | 49-242 | 49-244 |
| 640260 | 50-656 | 49-434 | 49-242 | 49-244 |
| 640260A | 50-656 | 49-434 | 49-242 | 49-244 |
| 640260B | 50-656 | 49-434 | 49-242 | 49-244 |
| 640262A | 50-644 | 49-424 | 49-242 | 49-244 |
| 640278A | 50-661 | 49-431 | 49-242 | 49-244 |
| 640298 | 50-666 | 49-436 | 49-242 | 49-244 |
| 640305 | 50-665 | 49-436 | 49-242 | 49-244 |
| 640306 | 50-664 | 49-436 | 49-242 | 49-244 |
| 640306A | 50-664 | 49-436 | 49-242 | 49-244 |
| 640330 | 50-641 | 49-421 | 49-243 | – |
| 640330A | 50-641 | 49-421 | 49-243 | – |
| 640340 | 50-664 | 49-436 | 49-242 | 49-244 |
| 640346 | 50-665 | 49-436 | 49-242 | 49-244 |
| 640347 | – | 49-436 | 49-242 | 49-244 |
| 640347 | 50-667 ** | 49-436 | 49-242 | 49-244 |
| 640349 | 50-659 | 49-436 | 49-242 | 49-244 |
| 640350 | 50-643 | 49-423 | 49-242 | 49-244 |

* Applications without air vane
** Applications with air vane

C

## Tecumseh Manufacturing Number to Oregon® Number

| Tecumseh MFG No. | OREGON |
|---|---|
| 226 | 50-650 |
| 339 | 50-650 |
| 386 | 50-650 |
| 418 | 50-650 |
| 419 | 50-650 |
| 422 | 50-650 |
| 433 | 50-650 |
| 438 | 50-650 |
| 445 | 50-650 |
| 703 | 50-650 |
| 1010 | 50-650 |
| 1021 | 50-650 |
| 1022 | 50-650 |
| 1034 | 50-650 |
| 1035 | 50-650 |
| 1036 | 50-650 |
| 1056 | 50-650 |
| 1059 | 50-650 |
| 1060 | 50-650 |
| 1099 | 50-642 |

| Tecumseh MFG No. | OREGON |
|---|---|
| 1107 | 50-646 |
| 1126 | 50-650 |
| 1135 | 50-647 |
| 1137 | 50-650 |
| 1159 | 50-646 |
| 1277 | 50-650 |
| 1278 | 50-650 |
| 1279 | 50-650 |
| 1427 | 50-662 |
| 1432 | 50-642 |
| 1433 | 50-663 |
| 1471 | 50-647 |
| 1474 | 50-650 |
| 1483 | 50-647 |
| 1499 | 50-650 |
| 1500 | 50-650 |
| 1529 | 50-650 |
| 1538 | 50-649 |
| 1548 | 50-650 |
| 1549 | 50-650 |

| Tecumseh MFG No. | OREGON |
|---|---|
| 1550 | 50-650 |
| 1552 | 50-650 |
| 1554 | 50-650 |
| 1555 | 50-650 |
| 1558 | 50-650 |
| 1604 | 50-650 |
| 1610 | 50-650 |
| 1619 | 50-650 |
| 1623 | 50-650 |
| 1650 | 50-650 |
| 1652 | 50-650 |
| 1670 | 50-649 |
| 5001 | 50-655 |
| 5002 | 50-659 |
| 5005 | 50-652 |
| 5017 | 50-655 |
| 5017 | 50-665 |
| 5019 | 50-641 |
| 5023 | 50-651 |
| 5028 | 50-653 |

| Tecumseh MFG No. | OREGON |
|---|---|
| 5036 | 50-659 |
| 5041 | 50-664 |
| 5043 | 50-654 |
| 5044 | 50-653 |
| 5047 | 50-641 |
| 5048 | 50-651 |
| 5087 | 50-653 |
| 5097 | 50-655 |
| 5128 | 50-655 |
| 5143 | 50-664 |
| 5165 | 50-655 |
| 5185 | 50-664 |
| 5192 | 50-641 |
| 5194 | 50-641 |
| 5196 | 50-654 |
| 5199 | 50-656 |
| 5208 | 50-644 |
| 5211 | 50-644 |
| 5241 | 50-664 |
| 5243 | 50-653 |

| Tecumseh MFG No. | OREGON |
|---|---|
| 5246 | 50-665 |
| 5252 | 50-666 |
| 5274 | 50-641 |
| 5285 | 50-640 |
| 5294 | 50-664 |
| 5310 | 50-665 |
| 5312 | – |
| 5312 | 50-667** |
| 5313 | 50-659 |
| 5333 | 50-653 |

* without air vane
** with air vane

## Complete Carburetors

**50-603** Walbro WYJ-192

**Carburetor**
Fits Echo SRM2601 brushcutter

**50-607** Walbro WYL-19

**Carburetor**
Fits Shindaiwa S230 brushcutter

**50-619** Zama C1U-K52
Echo 125200-13312
Zama C1U-K54
Echo 125200-49030

**Carburetor**
Fits Echo models SRM2100, GT2000, GT2100, ST2000SB, PAS, & PDSR

**50-620** Zama C1U-K54
Echo 125200-13123

**Carburetor**
Fits Echo model TC2100

**50-621** Zama RB-K66A
Echo A02100380

**Carburetor**
Rotary Barrel
Fits Echo models GT200, GT201, SRM200, SRM201, SRM230, SRM231, HC160, HC180, & HC200

C

# Carburetor Parts

| OREGON | Replaces | Description | Product Code | |
|---|---|---|---|---|

## Complete Carburetors

| | | | |
|---|---|---|---|
| **50-657** | Briggs & Stratton 498170<br>Briggs & Stratton 497586 | **Carburetor**<br>For vertical-shaft models 120XXX, 121XXX, 122XXX, 12EXXX, & 12TXXX with primer system | |
| **50-658** | Briggs & Stratton 499059 | **Carburetor**<br>For vertical-shaft models 121XXX, 122XXX, 123XXX, & 125XXX with choke | |
| **49-226** | Robin 106-62516-00 | **Carburetor**<br>Fits EC10 engine | |
| **49-227** | Robin 226-62341-00 | **Carburetor**<br>Fits EC15 engine | |
| **49-228** | Robin 227-62333-00 | **Carburetor**<br>Fits EC50 engine | |
| **50-635** | Honda 16100-ZE6-W01<br>Code 5189725<br>Honda 16100-ZE6-W00 | **Carburetor**<br>Fits Honda model GXV120 | |
| **50-636** | Honda 16100-ZE7-W21<br>Honda 16100-ZE7-W20<br>Code 517693 | **Carburetor**<br>Fits Honda model GXV160 with BE66C carburetor | |
| **50-638** | Honda 16100-ZH8-W51<br>Honda 16100-ZH8-W50<br>Code 5152491 | **Carburetor**<br>Fits Honda model GX160 with BE65B carburetor | |

C

## Complete Carburetors

| OREGON | Replaces | Description | Product Code |
|---|---|---|---|
| **50-634** | Honda 16100-ZE2-W71<br>Honda 16100-ZE2-W70<br>Code 5222211 | **Carburetor**<br>Fits Honda model GX240 with BE70B carburetor | |
| **49-915** | Honda 16100-ZE3-V01<br>Code 5222120 | **Carburetor**<br>Fits Honda model GX340 with BE85B carburetor | |
| **50-637** | Honda 16100-ZF6-V01<br>Honda 16100-ZF6-V00<br>Code 5222211 | **Carburetor**<br>Fits Honda model GX390 with BE85B carburetor | |
| **50-673** | Honda 16100-ZH7-W51 | **Carburetor**<br>Fits GX120 engine with the BE60B/B carburetor | |
| **50-668** | Honda 16100-ZH8-W61 | **Carburetor**<br>Fits GX160 engine with the BE65C/B carburetor | |
| **50-669** | Honda 16100-ZH9-W21<br>Honda 16100-ZH9-W20 | **Carburetor**<br>Fits GX270 engine with the BE75B/C carburetor | |
| **50-670** | Honda 16100-ZL0-W51 | **Carburetor**<br>Fits GX200 engine with the BE64B/C carburetor | |
| **50-674** | Honda 16100-ZK9-R61 | **Carburetor**<br>Fits GX270 generator engines with electric start | |

C

# Carburetor Parts

| OREGON | Replaces | Description | Product Code | |
|---|---|---|---|---|

## Complete Carburetors

| | | | |
|---|---|---|---|
| **50-034** | Kohler 14 853 49-S<br>Kohler 14 853 36-S | **Carburetor** - NEW<br>Fits Kohler XT650 & XT675 | |
| **50-640** | Tecumseh 640084B | **Carburetor**<br>Fits models HSK50, HSK40, & LH195SP<br>Replaces MFG No. 5285 | |
| **50-641** | Tecumseh 640330A<br>Tecumseh 640159<br>Tecumseh 640072A<br>Tecumseh 640072<br>Tecumseh 640034A | **Carburetor**<br>Fits models OHV140, OHV170, OHV175, OHV180, & OV490<br>Includes fuel shutoff solenoid<br>Replaces MFG No. 5274 | |
| **50-642** | Tecumseh 632334A | **Carburetor**<br>Fits models HM70, HM80, HMSK80, & HMSK90<br>Replaces MFG No. 1099 & 1432 | |
| **50-646** | Tecumseh 632230<br>Tecumseh 632272 | **Carburetor**<br>Fits models H50, H60, & HH60<br>Replaces MFG No. 1107 & 1159 | |
| **50-647** | Tecumseh 632615 | **Carburetor**<br>Fits models H30 & H35<br>Replaces MFG No. 1483, 1135, & 1471 | |
| **50-649** | Tecumseh 632671C<br>Tecumseh 632614<br>Tecumseh 632671A<br>Tecumseh 632671B | **Carburetor**<br>Fits VLV50, VLV60, & VLV126<br>Replaces MFG No. 1538 & 1670 | |

C

| OREGON | Replaces | Description | Product Code |
|---|---|---|---|

## Complete Carburetors

**50-650**

Tecumseh 631612
Tecumseh 631831
Tecumseh 631902
Tecumseh 632046
Tecumseh 632050
Tecumseh 632051
Tecumseh 632052
Tecumseh 632053
Tecumseh 632055
Tecumseh 632070
Tecumseh 632078
Tecumseh 632086
Tecumseh 632087
Tecumseh 632088
Tecumseh 632098
Tecumseh 632214
Tecumseh 632349
Tecumseh 632380
Tecumseh 632387
Tecumseh 632388
Tecumseh 632389
Tecumseh 632391
Tecumseh 632420
Tecumseh 632466
Tecumseh 632467
Tecumseh 632468
Tecumseh 632575
Tecumseh 632610
Tecumseh 632611
Tecumseh 632635
Tecumseh 632644
Tecumseh 632645
Tecumseh 632646
Tecumseh 632669
Tecumseh 632670
Tecumseh 632678
Tecumseh 632681
Tecumseh 632733
Tecumseh 632744
Tecumseh 632747
Tecumseh 632750
Tecumseh 632769
Tecumseh 632772
Tecumseh 632795
Tecumseh 632795A
Tecumseh 633014

**Carburetor**
Fits models TVS90, TVS100, ECV100, TVS120, TVS105, TVS115, TVXL115, TVXL90, TNT120, LAV35, TVXL115, TVS75, TVXL105, LAV30, LAV50, & LAV40

Replaces MFG. No. 226, 339, 386, 418, 419, 422, 433, 438, 445, 703, 1056, 1010, 1021, 1022, 1036, 1034, 1035, 1137, 1126, 1278, 1279, 1474, 1499, 1500, 1529, 1555, 1550, 1548, 1604, 1619, 1650, 1652, 1059, 1060, 1277, 1552, 1549, 1554, 1558, 1610, & 1623

---

**50-651**

Tecumseh 640017
Tecumseh 640017A
Tecumseh 640017B

**Carburetor**
Fits models OHH45 & OHH50
Replaces MFG. No. 5023, 5048

---

**50-652**

Tecumseh 640020
Tecumseh 640020A
Tecumseh 640020B

**Carburetor**
Fits models VLV50, VLV55, VLV60, VLV66, & VLV126
Replaces MFG. No. 5005

---

**50-653**

Tecumseh 640004
Tecumseh 640014
Tecumseh 640025
Tecumseh 640025A
Tecumseh 640025B
Tecumseh 640025C

**Carburetor**
Fits models OHH55, OHH60, & OHH65
Replaces MFG. No. 5028, 5044, 5087, 5243, & 5333

---

**50-654**

Tecumseh 640065
Tecumseh 640065A

**Carburetor**
Fits models OHV110, OHV125, OHV130, OHV115, OHV120, OV358EA, & OVH135
Replaces MFG. No. 5043 & 5196

C

# Carburetor Parts

| OREGON | Replaces | Description | Product Code |
|---|---|---|---|

## Complete Carburetors

**50-655**
Tecumseh 640023
Tecumseh 640051
Tecumseh 640140
Tecumseh 640152A
Tecumseh 640152

**Carburetor**
Fits models HM80 & HM100
Replaces MFG. No. 5001, 5017, 5097, 5128, & 5165

---

**50-656**
Tecumseh 640260
Tecumseh 640260A
Tecumseh 640260B

**Carburetor**
Fits models HM80, HM90, HM100,
LH318XA, & LH358EA
Replaces MFG. No. 5199

---

**50-661**
Tecumseh 640278
640278A

**Carburetor**
Fits LEV115 & LEV120
Replaces MFG. No. 5202

---

**50-659**
Tecumseh 640349

**Carburetor**
Fits models HMSK90, LH318SA, & LH358SA
Replaces MFG. No. 5313, 5002, & 5036

---

**50-667**
Tecumseh 640347

**Carburetor**
Fits model TM049XA
Replaces MFG. No. 5312
For units with air vane attached to the throttle shaft

---

**50-662**
Tecumseh 632113A
Tecumseh 632113

**Carburetor**
Fits models HS40 & HSSK40
Replaces MFG. No. 1427

---

**50-663**
Tecumseh 632370A
Tecumseh 632370
Tecumseh 632110

**Carburetor**
Fits models HM100 & HMSK100
Replaces MFG. No. 1433

---

**50-664**
Tecumseh 640340
Tecumseh 640306A
Tecumseh 640306
Tecumseh 640222A
Tecumseh 640222
Tecumseh 640060A
Tecumseh 640060

**Carburetor**
Fits models OH195EA, OH195EP, OH195XA, OH195XP,
OHH50, OHH55, OHH60, & OHH65
Replaces MFG. No. 5041, 5143, 5185, 5241, & 5294

C

| OREGON | Replaces | Description | Product Code |
|---|---|---|---|

## Complete Carburetors

| | | | |
|---|---|---|---|
| **50-665** | Tecumseh 640346<br>Tecumseh 640305 | **Carburetor**<br>Fits models OH195EA, OH195EP, OH195XA,OH195XP, OHH50, OHH55, OHH60, & OHH65<br>Replaces MFG. No. 5246 & 5310 | |
| **50-666** | Tecumseh 640298 | **Carburetor**<br>Fits OH195SA & OHSK70 | |
| **50-674** | Yamakoyo 49-68 | **Carburetor**<br>Fits YK900 generator engines with electric start | |

## Carburetor Insulators – Honda

| | | | |
|---|---|---|---|
| **49-233** | Honda 16211-ZE1-000 | **Carburetor Insulator**<br>Fits GX140 & GX160 | |
| **49-234** | Honda 16211-ZE2-000 | **Carburetor Insulator**<br>Fits GX240 & GX270 | |
| **49-236** | Honda 16211-ZE2-W00 | **Carburetor Insulator**<br>Fits GX340 & GX390 | |

C

# Carburetor Parts

| OREGON | Replaces | Description | Product Code |
|---|---|---|---|

## Carburetor Kits

| | | | |
|---|---|---|---|
| **49-868** | | **Carburetor Rebuild Kit**<br>Fits Stihl model 038 with Bing carburetors | 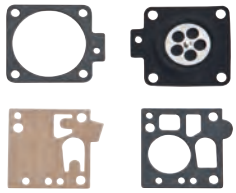 |
| **49-216** | Briggs & Stratton 398992 | **Carburetor Rebuild Kit**<br>Fits 3 and 3.5 HP horizontal engines with two-piece Flo-jet carburetor | |
| **49-991** | Briggs & Stratton 398235 | **Carburetor Rebuild Kit**<br>Fits models 170400, 171400, 190400, 194400, & 195400 series<br>For 7 HP and 8 HP engines after code 84100800 | 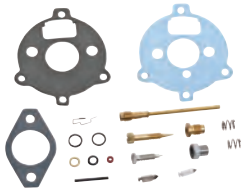 |
| **49-071** | Briggs & Stratton 391071 | **Carburetor Rebuild Kit**<br>For older style 10-12, and 16 HP single cylinder engines<br>Fits series 220400, 221400 & 222400 before code 81060200, 243400 after code 81101200, 302400, & 326400 before code 81090900 | |
| **49-693** | Briggs & Stratton 394693 | **Carburetor Rebuild Kit**<br>For 7 – 9 HP horizontal float carburetor<br>Fits model series 170400 (type 0500 thru 1999), 190400 (type 0010 thru 2100), 195400 (type 0600 thru 1999 & above 2100), 200500, & 233400 (type 0010 thru 0350) | |
| **49-102** | Briggs & Stratton 394698<br>Briggs & Stratton 299852 | **Carburetor Rebuild Kit**<br>For 6, 7, 8, 10, 11, and 12 HP vertical engines<br>Fits 146700, 170700, 190700, 191700, 192700, 193700, 220700, 252700, 253700, 255700, 256700, 280700, & 281700 series with float carburetors | |
| **49-101** | | **Carburetor Rebuild Kit**<br>For Pulsa-jet carburetors on 3, 4, and 5 HP horizontal shaft engines and older<br>3 HP vertical-shaft engines<br>Fits 80300, 100200, & 130200 series | |
| **49-989** | Briggs & Stratton 394989 | **Carburetor Rebuild Kit**<br>For 10, 11, and 16 HP horizontal single cylinder engines<br>For model series 220400, 221400, & 222400 after code 81060100, 243400 after code 81101100, 254400, & 326400 after code 81090800 | |

C

| OREGON | Replaces | Description | Product Code | |
|---|---|---|---|---|

## Carburetor Kits

| | | | | |
|---|---|---|---|---|
| **49-145** | Briggs & Stratton 494349<br>Briggs & Stratton 492072<br>Briggs & Stratton 398158 | **Carburetor Rebuild Kit**<br>Fits 130700 & 131700 series engines with Walbro LMS-3, 4, 10, and 19 carburetors | | |
| **49-078** | Briggs & Stratton 495606 | **Carburetor Rebuild Kit**<br>Fits 100200, 112200, 130200 (type 0016), 131200, 132200, & 133200<br>For 3 – 5 HP horizontal engines with Pulsa-jet carburetors | | |
| **49-220** | Briggs & Stratton 498116 | **Carburetor Rebuild Kit**<br>For Walbro carburetors on 28CID engines | | |
| **49-305** | Briggs & Stratton 493762<br>Briggs & Stratton 498260<br>Briggs & Stratton 492495 | **Carburetor Rebuild Kit**<br>Fits 3 – 5 HP engines with Walbro-built carburetors 110700 & 121700 after date code 95110200, 123700, 126700, 135700, 12E700, & 12F700 | | |
| **49-304** | Briggs & Stratton 498261<br>Briggs & Stratton 490937<br>Briggs & Stratton 398183 | **Carburetor Rebuild Kit**<br>For engines with Walbro carburetor<br>Fits 96000 & 97000 series engines | | 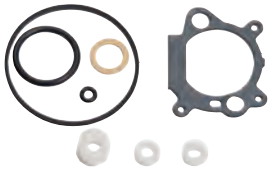 |
| **49-146** | Briggs & Stratton 497481<br>Briggs & Stratton 496622 | **Carburetor Rebuild Kit**<br>Fits 282700, 283700, 286700, 28A700, 28B700, 28C700, 28D700, & 28M700 engines with Walbro LMT-63, 65, & 66 carburetors | | |
| **49-147** | Briggs & Stratton 497535<br>Briggs & Stratton 494880<br>Briggs & Stratton 494384<br>Briggs & Stratton 495799 | **Carburetor Rebuild Kit**<br>Fits 194700, 195700, 196700, 197700, 198700, 283700, 284700, 289700, & 28M700 series engines with Walbro LMT-5, 37, & 77 carburetors | | |
| **49-148** | Briggs & Stratton 497578 | **Carburetor Rebuild Kit**<br>Fits 19B400, 19C400, & 19K400 series engines | | 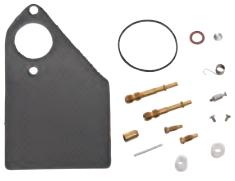 |

C

# Carburetor Parts

| OREGON | Replaces | Description | Product Code |
|---|---|---|---|

## Carburetor Kits

| | | | |
|---|---|---|---|
| **49-221** | Briggs & Stratton 499220 | **Carburetor Rebuild Kit**<br>Fits Walbro carburetors on 28CID engines | |
| **49-222** | Briggs & Stratton 690191 | **Carburetor Rebuild Kit**<br>Fits Walbro carburetors on 28CID engines | |
| **49-223** | Briggs & Stratton 692703<br>Briggs & Stratton 499685<br>Briggs & Stratton 698185<br>Briggs & Stratton 792385 | **Carburetor Rebuild Kit**<br>Fits Walbro carburetors on<br>11CID vertical-shaft engines | 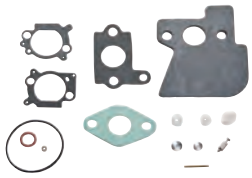 |
| **49-149** | Briggs & Stratton 693503 | **Carburetor Rebuild Kit**<br>Fits 422400, 422700, 42A700, 42B700,<br>42D700, & 42E700 series engines with<br>four-screw mount fuel pump carburetors | 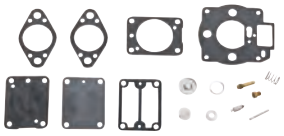 |
| **49-225** | Briggs & Stratton 695157<br>Briggs & Stratton 690032 | **Carburetor Rebuild Kit**<br>Fits Walbro carburetors on<br>11CID horizonatal shaft engines | |
| **49-070** | Briggs & Stratton 694056<br>Briggs & Stratton 394502<br>Briggs & Stratton 491539 | **Carburetor Rebuild Kit**<br>Fits twin cylinder 16 thru 18 HP<br>L head engines, models 400400 thru 422700,<br>42D700, 42A700, 460700, & 461700<br>Used on three-screw, fuel pump mount carburetors | |
| **49-329** | Cub Cadet 951-12760A<br>Cub Cadet 951-11332A<br>Cub Cadet 951-11332<br>Cub Cadet 751-12760A<br>Cub Cadet 751-11332A<br>Cub Cadet 751-11332 | **Carburetor Kit**<br>Fits 31A model series snow throwers<br>with 483-SUB engines (2008–2014) | |
| **49-331** | Cub Cadet 951-12762A<br>Cub Cadet 951-11219A<br>Cub Cadet 951-11219<br>Cub Cadet 751-12762A<br>Cub Cadet 751-11219A<br>Cub Cadet 751-11219 | **Carburetor Kit**<br>Fits 31A model series snow throwers<br>with 478-SUA/SUB engines (2012–2014) | |

C

| OREGON | Replaces | Description | Product Code |
|---|---|---|---|

## Carburetor Kits

| | | | |
|---|---|---|---|
| **49-328** | Cub Cadet 951-12788A<br>Cub Cadet 951-11021A<br>Cub Cadet 951-11021<br>Cub Cadet 751-12788A<br>Cub Cadet 751-11021A<br>Cub Cadet 751-11021 | **Carburetor Kit**<br>Fits 31A model series snow throwers<br>with 370-JUA/370-SUC engines (2012–2014) | |
| **49-327** | Cub Cadet 951-14231<br>Cub Cadet 951-11355<br>Cub Cadet 951-11355<br>Cub Cadet 751-14321<br>Cub Cadet 751-11355A<br>Cub Cadet 751-11355 | **Carburetor Kit**<br>Fits 31A model series snow throwers<br>with 490-SU/490-SUA engines | |
| **49-829** | Homelite A98064-11<br>Shindaiwa 99909-105 | **Diaphragm and Gasket Kit**<br>Fits ST80, 100, 120, 160, & 200 models with<br>Kawasaki engines and TK carburetors, and<br>Shindaiwa model T-20 | 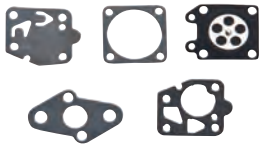 |
| **49-312** | Honda 16010-ZE0-025<br>Honda 16010-ZE0-015 | **Carburetor Gasket Set**<br>Fits GX120, GX160, GX200, GXV120, GXV140, & GXV160 | |
| **49-325** | Honda 16010-ZE1-812<br>Honda 16010-ZE1-811 | **Gasket Set—Carburetor**<br>Fits GX110, GX120, GX140, GX160, & GX200 engines | |
| **49-401** | Kohler 25-757-01S<br>Kohler 231555 | **Carburetor Rebuild Kit**<br>For 4-16 HP engines<br>Fits K91, K141, K161, K181,K241,K301,<br>K321, & K341 series | |
| **49-700** | Kohler 25-757-115<br>Kohler 25-757-08<br>Kohler 25-757-13 | **Carburetor Rebuild Kit**<br>For K & M series models with<br>Walbro carburetor | 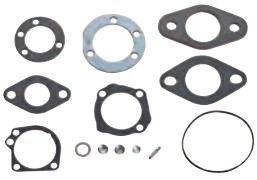 |

C

# Carburetor Parts

| OREGON | Replaces | Description | Product Code | |
|---|---|---|---|---|

## Carburetor Kits

| | | | | |
|---|---|---|---|---|
| **49-301** | Lawn Boy 678415<br>Lawn Boy 677271 | **Carburetor Rebuilt Kit**<br>For C & D series engines | | |
| **49-329** | MTD 951-12760A<br>MTD 951-11332A<br>MTD 951-11332<br>MTD 751-12760A<br>MTD 751-11332A<br>MTD 751-11332 | **Carburetor Kit**<br>Fits 31A model series snow throwers<br>with 483-SUB engines (2008 – 2014) | | |
| **49-331** | MTD 951-12762A<br>MTD 951-11219A<br>MTD 951-11219<br>MTD 751-12762A<br>MTD 751-11219A<br>MTD 751-11219 | **Carburetor Kit**<br>Fits 31A model series snow throwers<br>with 478-SUA/SUB engines (2012 – 2014) | | |
| **49-328** | MTD 951-12788A<br>MTD 951-11021A<br>MTD 951-11021<br>MTD 751-12788A<br>MTD 751-11021A<br>MTD 751-11021 | **Carburetor Kit**<br>Fits 31A model series snow throwers<br>with 370-JUA/370-SUC engines (2012–2014) | | |
| **49-327** | MTD 951-14231<br>MTD 951-11355A<br>MTD 951-11355<br>MTD 751-14321<br>MTD 751-11355A<br>MTD 751-11355 | **Carburetor Kit**<br>Fits 31A model series snow throwers<br>with 490-SU/490-SUA engines | | |
| **49-825** | Nikki | **Diaphragm and Gasket Kit**<br>Fits Mitsubishi T110, T140, T180, & T200,<br>TAS and Maruyama trimmers, Snapper 210SST,<br>211SST, 240SS, & 2450, Toro TC1000, 3000,<br>4000, & 5000 | | 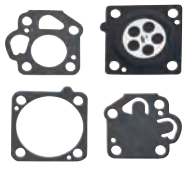 |
| **49-826** | Nikki | **Diaphragm and Gasket Kit**<br>Fits Mitsubishi T300 and up with BA401 engine,<br>Snapper 410, 411SST, & 4150, and Redmax BA401 blower | | 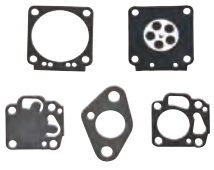 |
| **49-420** | Oregon® | **Carburetor Kit**<br>For Oregon carburetors<br>Fits Oregon 50-640 carburetor | | 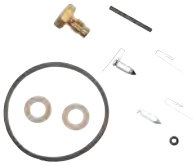 |

C

## Carburetor Kits

| OREGON | Replaces | Description | Product Code |
|---|---|---|---|
| 49-421 | Oregon | **Carburetor Kit**<br>For Oregon® carburetors<br>Fits Oregon 50-641 & 50-654 carburetors | 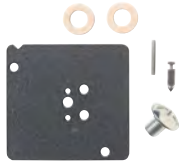 |
| 49-422 | Oregon | **Carburetor Kit**<br>For Oregon carburetors<br>Fits Oregon 50-642 carburetor | |
| 49-426 | Oregon | **Carburetor Kit**<br>For Oregon carburetors<br>Fits Oregon 50-650 carburetor | |
| 49-427 | Oregon | **Carburetor Kit**<br>For Oregon carburetors<br>Fits Oregon 50-653 carburetor | 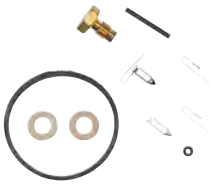 |
| 49-428 | Oregon® | **Carburetor Kit**<br>For Oregon carburetors<br>Fits Oregon 50-651 carburetor | |
| 49-429 | Oregon | **Carburetor Kit**<br>For Oregon carburetors<br>Fits Oregon 50-646 carburetor | |
| 49-430 | Oregon | **Carburetor Kit**<br>For Oregon carburetors<br>Fits Oregon 50-655 & 50-656 carburetors | |
| 49-432 | Oregon | **Carburetor Kit**<br>For Oregon carburetors<br>Fits Oregon 50-647 carburetor | 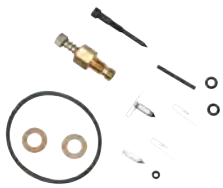 |

C

# Carburetor Parts

| OREGON | Replaces | Description | Product Code | |
|---|---|---|---|---|

## Carburetor Kits

| | | | | |
|---|---|---|---|---|
| **49-433** | Oregon® | **Carburetor Kit**<br>For Oregon carburetors<br>Fits Oregon 50-649 & 50-652 carburetors | | |
| **49-435** | Oregon | **Carburetor Kit**<br>Fits Oregon 50-657 & 50-658 carburetors | | 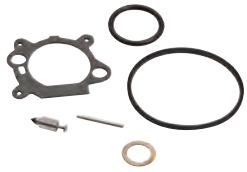 |
| **49-436** | Oregon | **Carburetor Kit**<br>For all Oregon Tecumseh replacement carburetors with metal float bowl | | |
| **49-827** | TK | **Diaphragm and Gasket Kit**<br>Fits Green Machine and John Deere with Fuji engines, Hoffco and Robin with Fuji engines, Green Machine models 2000, 2500, 3000, & 3100<br>For carburetors with round fuel pump | | |
| **49-828** | TK | **Carburetor Rebuild Kit**<br>Fits Green Machine and John Deere with Fuji engines, Hoffco and Robin with Fuji engines, Green Machine models 2000, 2500, 3000, & 3100, and Shindaiwa models T20 & T25<br>For carburetors with round fuel pump | | 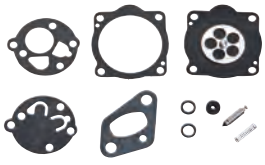 |
| **49-846** | TK | **Carburetor Rebuild Kit**<br>Fits Homelite ST80, 100, 120, 160, & 200 models with Kawasaki engines and TK carburetors | | |
| **49-201** | Tecumseh 29155<br>Tecumseh 29157<br>Tecumseh 30359<br>Tecumseh 31390<br>Walbro K1LMB<br>Walbro K3-LMB | **Carburetor Rebuild Kit**<br>For 2-8 HP engines with Walbro carburetors | | |

C

## Carburetor Kits

| OREGON | Replaces | Description | Product Code |
|---|---|---|---|
| **49-840** | Tecumseh 31840 | **Carburetor Rebuild Kit**<br>For Tecumseh-built carburetors | |
| **49-029** | Tecumseh 631029<br>Tecumseh 631240 | **Carburetor Rebuild Kit**<br>For Tecumseh-built carburetors | |
| **49-133** | Tecumseh 631782 | **Carburetor Rebuild Kit**<br>Fits V60, H80, HM80, VM80, & TVM140 model engines | |
| **49-978** | Tecumseh 631978 | **Carburetor Rebuild Kit**<br>Fits Tecumseh-built carburetors | |
| **49-229** | Tecumseh 631584<br>Tecumseh 631839 | **Carburetor Rebuild Kit**<br>Fits H25-70, LAV25-35, HM40-70, V50-70, & VH50-70 engines | |
| **49-239** | Tecumseh 631893A | **Carburetor Repair Kit**<br>Fits many Tecumseh-built diaphragm carburetors | |
| **49-019** | Tecumseh 632760<br>Tecumseh 632760A | **Carburetor Rebuild Kit**<br>Fits all Tecumseh-built carburetors, and H25-70, LAV25-35, HM40-70, V50-70, & VH50-70 engines | |
| **49-230** | Tecumseh 632347 | **Carburetor Rebuild Kit**<br>Fits many HM80-HM100 engines | |
| **49-805** | Tillotson RK14HU<br>Tillotson RK13HU | **Carburetor Rebuild Kit**<br>For HU series carburetors | 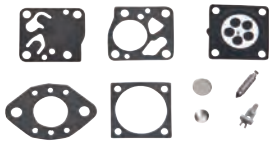 |

C

# Carburetor Parts

| OREGON | Replaces | Description | Product Code | |
|---|---|---|---|---|

## Carburetor Kits

| | | | | |
|---|---|---|---|---|
| **49-804** | Tillotson DG2HU<br>Tillotson DG1HU<br>Tillotson DG3HU | **Diaphragm and Gasket Kit**<br>For HU series carburetors | | 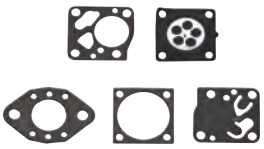 |
| **49-803** | Tillotson RK23HS<br>Tillotson RK17HS | **Carburetor Rebuild Kit**<br>For HS series carburetors | | |
| **49-802** | Tillotson DG5HS<br>Tillotson DG1HS<br>Roper 9576H | **Diaphragm and Gasket Kit**<br>For HS series carburetors | | 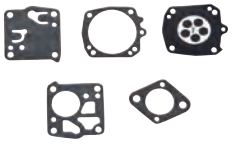 |
| **49-800** | Tillotson DG1HK<br>Roper 2504J | **Diaphragm and Gasket Kit**<br>For HK series carburetors | | 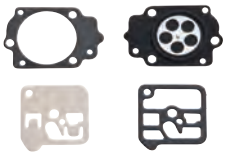 |
| **49-813-1** | Tillotson DG3HL | **Diaphragm and Gasket Kit**<br>Fits Stihl model 070 chainsaw | | 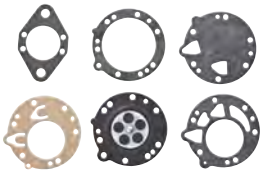 |
| **49-801** | Tillotson DG5HL<br>Tillotson DG2HL | **Diaphragm and Gasket Kit**<br>For HL series carburetors | | 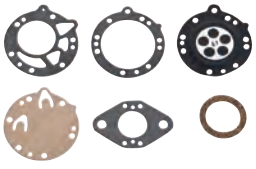 |
| **49-304** | Toro 77-8930 | **Carburetor Rebuild Kit**<br>For engines with Walbro carburetors and 5-1/2 HP walk-behind mowers<br>Complete with bowl gasket, throttle shaft seals, and o-rings | | 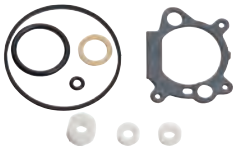 |
| **49-849** | Walbro K10HD | **Carburetor Rebuild Kit**<br>For HD series carburetors | | |
| **49-847** | Walbro D10HD | **Diaphragm and Gasket Kit**<br>For HD series carburetors | | 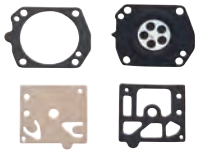 |

C

## Carburetor Kits

| OREGON | Replaces | Description | Product Code |
|---|---|---|---|
| **49-845** | Walbro K20-HDA | **Carburetor Rebuild Kit**<br>For HDA series carburetors | 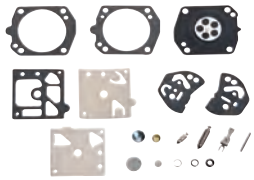 |
| **49-835** | Walbro D20-HDA<br>Sachs-Dolmar<br>119.151.540.7 | **Diaphragm and Gasket Kit**<br>For HDA series carburetors | 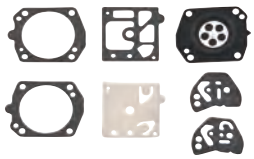 |
| **49-853** | Walbro K22HDA | **Carburetor Rebuild Kit**<br>For HDA series carburetors<br>Economy version of 49-845 | |
| **49-852** | Walbro D22HDA | **Diaphragm and Gasket Kit**<br>For HDA series carburetors<br>Economy version of 49-835 | 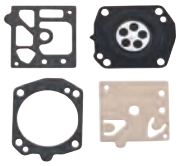 |
| **49-832** | Walbro K10HDB | **Carburetor Rebuild Kit**<br>For HDB series carburetors | 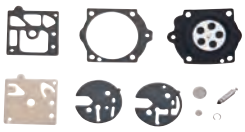 |
| **49-806** | Walbro D10HDB<br>Walbro D1HDB<br>Walbro 350-518<br>McCulloch 217076<br>Weed Eater 35128<br>Echo 123101-12330 | **Diaphragm and Gasket Kit**<br>For HDB series carburetors | 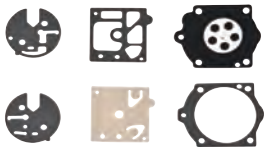 |
| **49-833** | Walbro K10HDC | **Carburetor Rebuild Kit**<br>For HDC series carburetors | 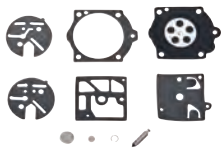 |
| **49-807** | Walbro D10HDC<br>Walbro D1HDC<br>Walbro 350-503<br>Sach Dolmar 118.151.520.0 | **Diaphragm and Gasket Kit**<br>For HDC series carburetors | 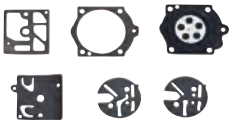 |
| **49-834** | Walbro K10-SDC<br>AYP 2413J | **Carburetor Rebuild Kit**<br>For SDC series carburetors | |

C

# Carburetor Parts

| OREGON | Replaces | Description | Product Code | |
|---|---|---|---|---|
| **Carburetor Kits** | | | | |
| **49-810** | Walbro D1-SDC<br>Walbro D10-SDC<br>Walbro 350-501<br>Echo 123101-12430<br>AYP 2421J | **Diaphragm and Gasket Kit**<br>For SDC series carburetors | | 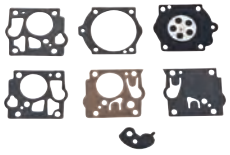 |
| **49-816** | Walbro K10WA&T<br>Walbro K6WA<br>Echo 123100-16330 | **Carburetor Rebuild Kit**<br>For WA & WT series carburetors | | |
| **49-812** | Walbro D1WA&T<br>Walbro D10WA&T<br>Walbro 350-502<br>Echo 123101-0393<br>Echo 123100-03930<br>Weed Eater 35146 | **Diaphragm and Gasket Kit**<br>For WA & WT series carburetors | | |
| **49-831** | Walbro K20WAT | **Carburetor Rebuild Kit**<br>For newer WA & WT series carburetors | | |
| **49-844** | Walbro D20-WAT | **Diaphragm and Gasket Kit**<br>For newer WA & WT series carburetors | | 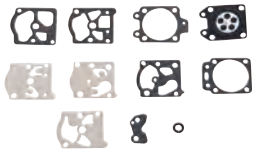 |
| **49-872** | Walbro K10-WB | **Carburetor Rebuild Kit**<br>For all WB series carburetors<br>except WB25, WB32, & WB33 | | 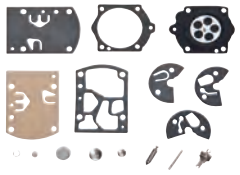 |
| **49-873** | Walbro K10-WJ | **Carburetor Rebuild Kit**<br>For WJ series carburetors | | 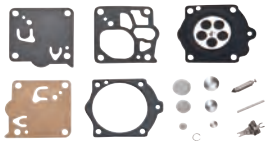 |
| **49-843** | Walbro D10-WJ | **Diaphragm and Gasket Kit**<br>For WJ series carburetors | | 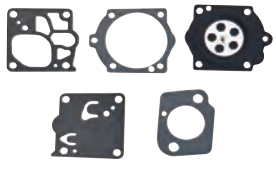 |
| **49-875** | Walbro K10-WY | **Carburetor Rebuild Kit**<br>For WY series carburetors | | |

C

## Carburetor Kits

| OREGON | Replaces | Description | Product Code |
|---|---|---|---|
| **49-839** | Walbro D10WY | **Diaphragm and Gasket Kit**<br>For WY series carburetors | |
| **49-281** | Walbro D20-WYJ | **Diaphragm and Gasket Kit**<br>For WYJ series carburetors | |
| **49-882-0** | Walbro K20-WYJ | **Carburetor Rebuild Kit**<br>For WYJ series carburetor | |
| **49-317** | Walbro D11-WYL | **Diaphragm and Gasket Kit**<br>For WYL carburetors | |
| **49-316** | Walbro K20-WYL | **Carburetor Rebuild Kit**<br>For WYL carburetors | |
| **49-877** | Walbro K10-WZ | **Carburetor Rebuild Kit**<br>For WZ series carburetors | |
| **49-848** | Walbro D10WZ | **Diaphragm and Gasket Kit**<br>For WZ series carburetors | |
| **49-809** | Walbro D1-MDC<br>Walbro 350-504 | **Diaphragm and Gasket Kit**<br>For many McCulloch saws and MDC series carburetors | |

C

# Carburetor Parts

| OREGON | Replaces | Description | Product Code | |
|---|---|---|---|---|

## Carburetor Kits

| | | | | |
|---|---|---|---|---|
| **49-814** | Walbro D1WS<br>Walbro D10WS<br>Walbro 350-511 | **Diaphragm and Gasket Kit**<br>For WS series carburetors | | 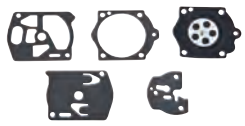 |
| **49-272** | Zama RB-47 | **Carburetor Rebuild Kit**<br>Fits C1Q-E3, C1Q-E4, C1Q-E6, A C1Q-11, A-G C1Q-W31, A, B C1Q-W34, A C1Q-W35, A C1Q-W36, A C1Q-W37, C1Q-W38, C1Q-W39, C1Q-W40, C1Q-W41, C1U-W10, B, C C1U-W12, A, B C1U-W13, A, B C1U-W16, B, C C1U-W22, & C1U-W46 model carburetors | | |
| **49-439** | Zama RB-64 | **Carburetor Rebuild Kit**<br>Fits C1U-K47, C1U-K51, C1U-K52, C1U-K53, C1U-K55, C1U-K58, C1U-K59, C1U-K62, & C1U-SK17 | | |
| **49-904** | Zama RB-69 | **Carburetor Rebuild Kit**<br>Fits model C1Q-EL11, EL11A, EL11B, EL13, & S32 series carburetors<br>OEM KIT | | |
| **49-271** | Zama RB-71 | **Carburetor Rebuild Kit**<br>For C1U-K54, A C1U-181, & A, B C1U-K82 model carburetors | | |
| **49-908** | Zama RB-73 | **Carburetor Rebuild Kit**<br>Fits model C1U-W4A, W4B, W4C, W7, W7A, & W7C series carburetors<br>OEM KIT | | 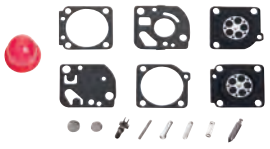 |
| **49-274** | Zama RB-77 | **Carburetor Rebuild Kit**<br>For C1Q-S43, A, B C1Q-S57, A, B C1Q-S137, & A C1Q-S152 model carburetors | | |
| **49-902** | Zama RB-39 | **Carburetor Rebuild Kit**<br>Fits model C1Q-H14, H14A, H14B, H19A, H19B, H19C, H27, H32, H32A, M27, M27A, M27B, M27C, M27D, M28, M28A, M28B, M28C, M28D, M33, M33A, M33B, M33C, M36A, & W2A series carburetors<br>OEM KIT | | |
| **49-437** | Zama RB-40 | **Carburetor Rebuild Kit**<br>For model C1Q-S33, S33A, S33B, S34, S34A, S34B, S34C, S34D, S34E, S34F, S34G, S34H, S35, S35A, S35B, S36, S36A, S36B, S36C, S36D, S36E, S36F, S36G, S51, S51A, S51S, SK4, SK5, SK6, SK6A, & SK7 series carburetors | | 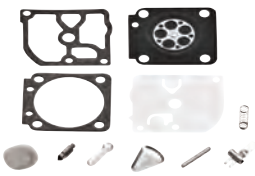 |

C

## Carburetor Kits

| OREGON | Replaces | Description | Product Code |
|---|---|---|---|
| **49-903** | Zama RB-44 | **Carburetor Rebuild Kit**<br>Fits C1M-K24, K24A, K24B,<br>K25, K25A, K25B, K49, K49A, K49B,<br>& K49C series carburetors<br>OEM KIT | 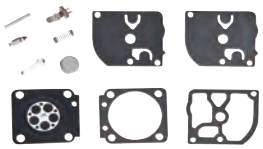 |
| **49-438** | Zama RB-45 | **Carburetor Rebuild Kit**<br>Fits C1Q-EL1, EL5, EL6, EL7, EL10, & M43 series carburetors | 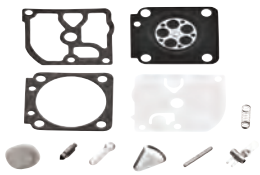 |
| **49-286** | Zama RB-59 | **Carburetor Rebuild Kit**<br>For C1U series carburetors C1U-K42(A-B), C1U-K43(A-B),<br>& C1U-K44(A-B) | 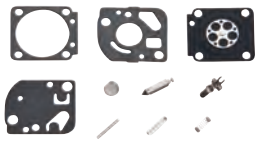 |
| **49-901** | Zama RB-59 | **Carburetor Rebuild Kit**<br>OEM KIT | |
| **49-906** | Zama RB-61 | **Carburetor Rebuild Kit**<br>Fits model C1M-K37A, K37B,<br>K37C, & K37D series carburetors<br>OEM KIT | 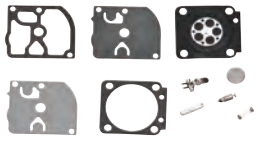 |
| **49-861** | Zama RB-1<br>Zama RB-01 | **Carburetor Rebuild Kit**<br>Fits C1-17-01C, C1-17-02A, & C1-M2B<br>Use on McCulloch and others | 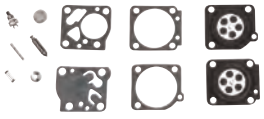 |
| **49-854** | Zama GND1 | **Diaphragm and Gasket Kit**<br>Fits C1-17-01C, C1-17-02A, & C1-M2B<br>models carburetors, McCulloch<br>models PM510 & PM300 | |
| **49-819-0** | Zama RB-1<br>Zama RB-01 | **Carburetor Rebuild Kit**<br>Fits C1-17-01C, C1-17-02A, C1-M2B<br>For McCulloch and others<br>OEM KIT | 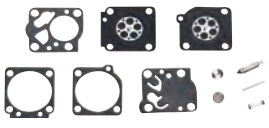 |
| **49-837-0** | Zama RB-6<br>Zama RB-06 | **Carburetor Rebuild Kit**<br>Fits Echo 280E & 290 with C1S-K1 carburetors | 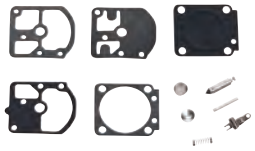 |
| **49-818-0** | Zama RB-10<br>McCulloch 218071<br>Toro 4-2181<br>Snapper 4-2181 | **Carburetor Rebuild Kit**<br>Fits C1S-M, M9, M12, & M13 series carburetors<br>For McCulloch and others<br>OEM KIT | 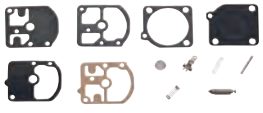 |

C

# Carburetor Parts

| OREGON | Replaces | Description | Product Code | |
|---|---|---|---|---|

## Carburetor Kits

| | | | | |
|---|---|---|---|---|
| **49-863** | Zama RB11 | **Carburetor Rebuild Kit**<br>Fits models C1S-S1, S1A, S1B, &<br>S1C carburetors on Stihl and others | | |
| **49-859** | Zama GND07<br>Zama GND07 | **Diaphragm and Gasket Kit**<br>Fits CSS series carburetors used on Stihl and others | | |
| **49-836-0** | Zama RB15 | **Carburetor Rebuild Kit**<br>Fits Homelite XL-12, & SXL chainsaws,<br>McCulloch PM800, PM850, & SP81 chainsaws<br>OEM KIT | | |
| **49-860** | Zama GND8<br>Zama GND08 | **Diaphragm and Gasket Kit**<br>Fits Homelite and McCulloch models using<br>C2-20, C2-L1, & C2-M series carburetors | | 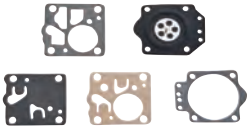 |
| **49-864** | Zama RB20<br>Homelite A00288 | **Carburetor Rebuild Kit**<br>Fits C1U series on Homelite and others | | |
| **49-817-0** | Zama RB20<br>Homelite A00288 | **Carburetor Rebuild Kit**<br>OEM KIT | | 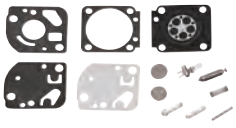 |
| **49-822-0** | Zama RB21<br>Echo 125302-42030<br>Echo 125302-11520<br>John Deere AM104875 | **Carburetor Rebuild Kit**<br>Fits C1U-K7 thru K11, K16, K26, K29, &<br>K32 carburetors, Echo models GT1100,<br>GT2100, GT2103, HC1000, PB1000, PB1010,<br>SRM1400, SRM2300, & HC1500<br>OEM KIT | | |
| **49-865** | Zama RB21 | **Carburetor Rebuild Kit**<br>Fits Echo HC1500 & SRM2301 with<br>C1U-K10 & K12 carburetors | | 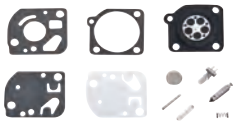 |
| **49-283** | Zama RB-23 | **Carburetor Rebuild Kit**<br>Fits carburetor models<br>C1U-K17, C1U-K27, CIU-K27A,<br>C1U-K27B, C1K-27C, & C1K-27D | | |
| **49-887-0** | Zama RB-23 | **Carburetor Rebuild Kit**<br>OEM KIT | | |

C

## Carburetor Kits

| OREGON | Replaces | Description | Product Code |
|---|---|---|---|
| **49-284** | Zama RB-26 | **Carburetor Rebuild Kit**<br>Fits C1U series carburetors: C1U-K20(A-C), C1U-K21(A-B), C1U-K23, C1U-K31, C1U-K34A, C1U-SK11, C1U-SK12, C1U-SK13A, & C1U-SK14 | |
| **49-888-0** | Zama RB-26 | **Carburetor Rebuild Kit**<br>OEM KIT | |
| **49-880** | Zama GND17<br>Zama GND14 | **Diaphragm and Gasket Kit**<br>Fits C1Q & C1U series carburetors, Echo SK11, 12, 13, H, & W7B, also some CQQSK, C1UD, & C1UK carburetors | |
| **49-897** | Zama RB-27<br>Zama RB-22 | **Carburetor Rebuild Kit**<br>Fits C1U-K10A carburetors, Echo SV-4, HC1500, & SRM2301 | |
| **49-866** | Zama RB28<br>McCulloch 222404<br>Snapper 4-2414<br>Zama K500080 | **Carburetor Rebuild Kit**<br>Fits C1U series<br>For McCulloch, Green Machine, Hoffco, and others | |
| **49-285** | Zama RB-29 | **Carburetor Rebuild Kit**<br>For C1U series carburetors: C1U-H12(C-D), C1U-H18(A-D), C1U-H29, C1U-H30B, C1U-H31(A-C), C1U-H33, C1U-H39A, C1U-H40, C1U-H41, C1U-H47, C1U-H48A, C1U-H60(A-E), C1U-M35A, C1U-P5, C1U-P6A, C1U-P7, C1U-P10A, C1U-P11(A-B), C1U-P12A, & C1U-P14A | |
| **49-891-0** | Zama RB-29 | **Carburetor Rebuild Kit**<br>OEM KIT | |
| **49-855** | Zama GND-12<br>Zama GND-15 | **Diaphragm Gasket Kit**<br>Fits C1U carburetors | |
| **49-899** | Zama RB31 | **Carburetor Rebuild Kit**<br>Fits C3A series carburetors | |
| **49-893** | Zama GND-21 | **Diaphragm and Gasket kit**<br>Fits C3A series carburetors | |

C

# Carburetor Parts

| OREGON | Replaces | Description | Product Code |
|---|---|---|---|

## Carburetor Kits

| | | | |
|---|---|---|---|
| **49-921** | Zama GND-27 | **Diaphragm and Gasket Kit** - NEW<br>Fits C1Q-D13 A, C1Q-DM14, C1Q-E5A, C1Q-E5B, C1Q-H14 A-B, C1Q-H17 A-D, C1Q-H19 A-C, C1Q-H27, C1Q-H32A, C1Q-H35, C1Q-H42, C1Q-H42, C1Q-H44, C1Q-H45, C1Q-M24, C1Q-M25, C1Q-M26, C1Q-M39, C1Q-W2A, C1Q-W5 A-C, C1Q-W6, A-C, & C1Q-W8 carburetors | |
| **49-867** | Zama RB36 | **Carburetor Rebuild Kit**<br>Fits C3M, Stihl 044 saws with C3M-S5D, C3M S5E, & S3M-S12A carburetors | |
| **49-823-0** | Zama RB36 | **Carburetor Rebuild Kit**<br>For C3M, Stihl 044 saws with C3M-S5D, C3M S5E, & S3M-S12A carburetors<br>OEM KIT | 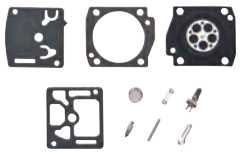 |
| **49-898** | Zama RB-41 | **Carburetor Rebuild Kit**<br>Fits C1Q-EL21, 22, 23, C1Q-S11, 16, C1Q-W14, & 20 | |
| **49-879** | Zama 11081200608<br>Zama RB42 | **Carburetor Rebuild Kit**<br>Fits LAS8 carburetors on Stihl model 08 | |
| **49-440** | Zama RB-66 | **Carburetor Rebuild Kit**<br>Fits C1Q-S28, 29, 30, 41, 42, 44, & 45 series carburetors | 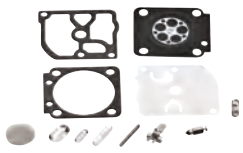 |
| **49-441** | Zama RB-100 | **Carburetor Rebuild Kit**<br>Fits C1Q-S69A, S70, S71, S73, S79, S80B, S93, S95, S97, & S97A series carburetors | 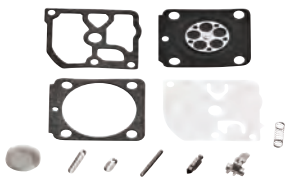 |
| **49-883** | Zama GND-28 | **Diaphragm and Gasket Kit**<br>Fits C1Q carburetors used on Stihl | 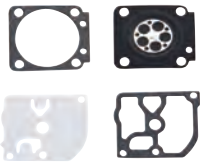 |
| **49-881** | Zama GND-2 | **Diaphragm and Gasket Kit**<br>Fits C1S for Echo and Homelite | |

C

## Carburetor Kits

| OREGON | Replaces | Description | Product Code |
|---|---|---|---|
| **49-282** | Zama GND4 | **Diaphragm and Gasket Kit**<br>Fits C1S-K1D carburetors | |
| **49-885-0** | Zama GND4 | **Diaphragm and Gasket Kit**<br>OEM KIT | |
| **49-894** | Zama GND-29<br>Zama GND-35 | **Diaphragm and Gasket Kit**<br>Fits C1Q series | |
| **49-924** | Zama GND-35 | **Diaphragm and Gasket Kit** - NEW<br>Fits most C10 type carburetors | |
| **49-856** | Zama GND-13 | **Diaphragm and Gasket Kit**<br>Fits C1U series: C1U-M16 & C1U-M20 used on Echo, McCulloch, and Toro | |
| **49-270** | GND-18 | **Diaphragm and Gasket Kit**<br>Fits C1Q & C1U series carburetors | |
| **49-884** | Zama GND-33<br>Zama GND-39 | **Diaphragm and Gasket Kit**<br>Fits C1Q carburetors on Husqvarna and Jonsered | |
| **49-857** | Zama GND-25 | **Diaphragm and Gasket Kit**<br>Fits C3M series carburetors on Stihl and others | |
| **49-442** | Zama GND-56 | **Diaphragm and Gasket Kit**<br>Fits C1Q-S68, S68A, S68B, S68C, S68D, S69A, S70, S71, S73, S79, S80B, S93, S95, S97, S97A, S105, S111, S112, S112A, S115, S115A, S116, S116A, S119, S119A, S120, S120A, S121, S121A, S122, S122A, S123, & S123A series carburetors | |
| **49-288** | ZAMA RB-89 | **Carburetor Rebuild Kit**<br>Fits C1Q series carburetors: C1Q-S48A, C1Q-S55, C1Q-S58, C1Q-S64, C1Q-S82, C1Q-S83, C1Q-S138, & C1Q-S139 | |

C

# Carburetor Parts

| OREGON | Replaces | Description | Product Code | |
|---|---|---|---|---|
| **Carburetor Kits** | | | | |
| **49-276** | RB99 | **Carburetor Rebuild Kit**<br>Fits C1Q-S68, A-D C1Q-S105, C1Q-S111, & C1Q-S115, &<br>A, B C1Q-S116 A model carburetors | | |
| **49-273** | RB105 | **Carburetor Rebuild Kit**<br>Fits C1Q-S75, A, B C1Q-S76, A, B C1Q-S77, A, B C1Q-S84,<br>A-C C1Q-S85, A-C C1Q-S68, A-C C1Q-S86, A-C C1Q-S87,<br>A-C C1Q-S89, A-C C1Q-S90, A, B C1Q-91, A C1Q-S92,<br>A C1Q-S102, A C1Q-S106, & A C1Q-S107 A model carburetors | | |
| **49-287** | ZAMA RB-114 | **Carburetor Rebuild Kit**<br>For C1Q series carburetors: C1Q-S72B,<br>C1Q-S81, & C1Q-S88 | | |
| **49-277** | RB129 | **Carburetor Rebuild Kit**<br>For C1M-W26 A & C model carburetors | | 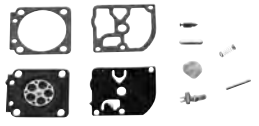 |
| **49-275** | RB142 | **Carburetor Rebuild Kit**<br>For C1U-W32 A model carburetors | | |
| **49-322** | ZAMA GND-53 | **Diaphragm and Gasket Kit**<br>Fits C1Q-S62 & C1Q-S67 | | 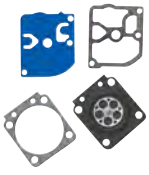 |
| **49-923** | Zama GND-55,<br>Zama GND-72,<br>Zama GND-91,<br>Zama GND-93, | **Diaphragm and Gasket Kit** - NEW<br>Fits C1Q-S110B, C1Q-S110C, & C1Q-S110D | | |
| **49-313** | ZAMA GND-84 | **Diaphragm and Gasket Kit**<br>Fits C1Q-S118 | | 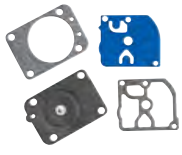 |
| **49-319** | ZAMA RB-151 | **Carburetor Rebuild Kit**<br>Fits C1Q-S118 | | 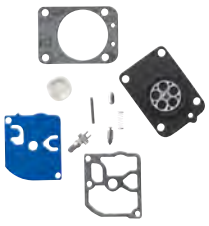 |

C

| OREGON | Replaces | Description | Product Code |
|---|---|---|---|

## Carburetor Kits

**49-320** ZAMA GND-89

**Diaphragm and Gasket Kit**
Fits C1Q-S140 & C1Q-S143

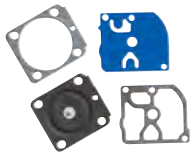

**49-323** ZAMA GND-88

**Diaphragm and Gasket Kit**
Fits C1M-S141, C1M-S142, C1M-S144, C1M-S145, C1M-S146, & C1M-S151

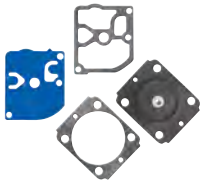

**49-318** RB-155, RB-164, RB-180

**Carburetor Rebuild Kit**
Fits C1M-S141, C1M-S142, C1M-S144, C1M-S145, C1M-S146, & C1M-S151

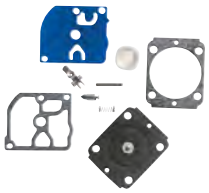

## Gasket / Intake – 2-Cycle Engines

| OREGON | Qty. | Description | Product Code |
|---|---|---|---|
| 08-010 | 114 | Gasket/Intake<br>2-Cycle engines<br>Standard refill qty. 10 | |

### Components

| | | | |
|---|---|---|---|
| – | 10 | Intake gasket for HU* | |
| – | 5 | Intake gasket for HK* | |
| – | 5 | Intake gasket for HK* | |
| – | 10 | Intake gasket for HCA, HDA* | |
| – | 5 | Intake gasket for HL* | |
| – | 5 | Intake gasket for HS* | |
| – | 10 | Intake gasket for WS** | |
| – | 5 | Intake gasket for MDC** | |
| – | 2 | Intake gasket for WZ** | |
| – | 2 | Intake gasket for WZ** | |
| – | 5 | Intake gasket for HL* | |
| – | 10 | Intake gasket* | |
| – | 10 | Intake gasket• | |
| 49-262 | 10 | Intake gasket | |
| – | 10 | Intake gasket | |
| – | 5 | Gasket material | |
| – | 5 | Intake gasket* | |

* Tillotson **Walbro

**49-603** Kohler 17 755 06-S

**Gasket Set** - NEW
Fits Kohler CH260 & CH270

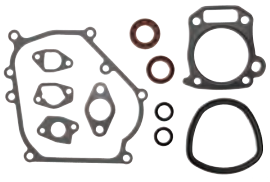

**49-604** Kohler 17 755 44-S

**Gasket Set** - NEW
Fits Kohler CH440

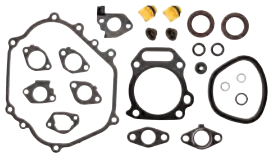

C

# Carburetor Parts

| OREGON | Replaces | Description | Product Code |
|---|---|---|---|

## Gasket / Intake – 2-Cycle Engines

| | | | |
|---|---|---|---|
| **49-605** | Kohler 17 755 43-S | **Gasket Set** - NEW<br>Fits Kohler CH395 | |
| **49-606** | Kohler 24 153 30-S | **Gasket Valve-cover** - NEW<br>Fits Kohler CH, CV, ECH, & SV series engines | 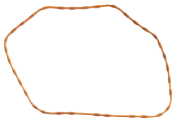 |
| **49-607** | Kohler 24 841 04-S | **Gasket Kit, Head** - NEW<br>Fits CH25, CH730, CH740, & CV25<br>For 25 HP engines | 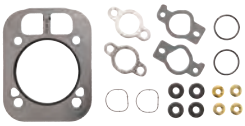 |

## Diaphragms

| | | | |
|---|---|---|---|
| **49-004** | Briggs & Stratton 270026 | **Diaphragm**<br>For 3, 3-1/2, 4, & 5 HP engines<br>Fits 60000, 80000, 100000, & 130000 series | |
| **49-003** | Briggs & Stratton 270253 | **Diaphragm**<br>For 3 and 3-1/2 HP vertical engines<br>with manual choke 82500 &<br>92000 series before type 0500 | |
| **49-001** | Briggs & Stratton 272538<br>Briggs & Stratton 272538S | **Diaphragm**<br>New style for horizontal 3-1/2 HP engines | |
| **49-005** | Briggs & Stratton 299637<br>Briggs & Stratton 496418 | **Diaphragm**<br>Fits 3 HP vertical engines with automatic choke<br>92500 series above type 0500 | |
| **49-006** | Briggs & Stratton 391681<br>Briggs & Stratton 391643<br>Briggs & Stratton 496416 | **Diaphragm**<br>For 3-1/2 and 4 HP engines with automatic choke<br>Fits 92900 series type 0500 & above, & 110900 series | |
| **49-007** | Briggs & Stratton 495770<br>Briggs & Stratton 795083 | **Diaphragm Kit – Carburetor**<br>Fits model 95900 & 96900 | |
| **49-037** | Briggs & Stratton 5021 | **Diaphragm Kit – Carburetor**<br>For 5 HP horizontal engines | |

C

## Diaphragms

| OREGON | Replaces | Description | Product Code |
|---|---|---|---|
| **53-001** | Briggs & Stratton 221377<br>Briggs & Stratton 690766 | **Diaphragm Spring Cup**<br>Fits Oregon® 49-080 | |
| **49-213** | Briggs & Stratton 272638 | **Fuel Pump Diaphragm**<br>Fits 40 & 42 CID twin cylinder engines | |
| **49-008** | Briggs & Stratton 393397 | **Diaphragm Kit – Fuel Pump**<br>For 16 and 18 HP twin cylinder engines<br>Fits 401400, 402400, 402700, 422400, & 422700 series | |
| **49-224** | Briggs & Stratton 693502 | **Fuel Pump Rebuild Kit**<br>For 40 & 42 CID twin cylinder engines with four-screw mounting | |
| **49-002** | Tecumseh 630978 | **Diaphragm**<br>For all engines with diaphragm carburetors<br>3 – 5 HP | |
| **49-922** | Zama A015002 | **Metering Diaphragm** - NEW<br>Fits C1-17-01C & C1-17-02A carburetors | |
| **49-917** | Zama A015010<br>Zama A015018 | **Metering Diaphragm** - NEW<br>Fits C1U & C1Q carburetors | |
| **49-918** | Zama A015052<br>Zama A015053<br>Zama A015046<br>Zama A015048<br>Zama A015070 | **Metering Diaphragm** - NEW<br>Fits C1Q-S carburetors | |
| **49-919** | Zama A015006 | **Metering Diaphragm** - NEW<br>Fits C1S carburetors | |
| **49-920** | Zama A015011<br>Zama A015016<br>Zama A015019<br>Zama A015041<br>Zama A015042<br>Zama A015044<br>Zama A015050<br>Zama A015077 | **Metering Diaphragm** - NEW<br>Fits C1Q-S & C1U carburetors | |

# Carburetor Parts

| OREGON | Replaces | Description | Product Code | |
|---|---|---|---|---|

## Carburetor Floats

| | | | |
|---|---|---|---|
| **49-362** | Briggs & Stratton 298514/ 692265 | **Float**<br>Fits large two-piece Flo-jet carburetors 240000 series engines | |
| **49-363** | Briggs & Stratton 99333 | **Float**<br>Fits small two-piece Flo-jet carburetors 140000 to 190000 series engines | |
| **49-214** | Briggs & Stratton 299707 | **Float**<br>Fits 14, 17, & 19 CID horizontal shaft engines with one-piece Flo-jet carburetors | |
| **49-992** | Honda 16013-ZA0-931 | **Carburetor Float**<br>Fits model GX240 & GX270 series engines | |
| **49-993** | Honda 16013-ZA0-065 | **Carburetor Float**<br>Fits model G110 & GX120 series engines | |
| **49-911** | Honda 16013-ZA0-005 | **Carburetor Float**<br>Fits model G160 series engine | |
| **49-912** | Honda 16013-ZA0-931 | **Carburetor Float**<br>Fits model G340 & GX390 series engines | |
| **49-913** | Honda 16013-883-005 | **Carburetor Float**<br>Fits model G200 series engine | |
| **49-242** | Oregon® | **Float**<br>For Oregon carburetors only<br>Fits Oregon 50-640, 50-648, 50-650, 50-653, 50-651, 50-646, 50-656, 50-655, & 50-647 carburetors | |
| **49-243** | Oregon® | **Float**<br>For Oregon carburetors only<br>Float for Oregon 50-641, 50-654, 50-649, & 50-652 carburetors | |

C

| OREGON | Replaces | Description | Product Code | |
|---|---|---|---|---|

## Carburetor Floats

| | | | | |
|---|---|---|---|---|
| **49-009** | Tecumseh 632019 | **Carburetor Float**<br>For all Tecumseh-built carburetors | | |

## Carburetor Float Bowls

| | | | | |
|---|---|---|---|---|
| **49-209** | Briggs & Stratton 221995 | **Float Bowl**<br>For 14, 17, & 19 CID vertical-shaft engines with one-piece Flo-jet carburetors | | |
| **49-235** | Briggs & Stratton 493640 | **Float Bowl**<br>Fits 93300 series engines and LME carburetors<br>Replaces Walbro 20-141-1 & 20-141 | | |
| **49-219** | Briggs & Stratton 495933 | **Float Bowl**<br>Fits Walbro carburetors on 19 & 28 CID engines | | |
| **49-985** | Honda 16015-892-505 | **Carburetor Float Bowl and Gasket**<br>Fits GCV135-160 | | |
| **49-994** | Honda 16015-ZE0-811 | **Float Bowl**<br>Fits model G100 & G200 series engines<br>1.678" dia. x 1.275" height.<br>Includes o-ring and nut | | |
| **49-995** | Honda 16015-ZE1-811<br>Honda 16015-ZE0-831 | **Float Bowl**<br>For GX110, GX120, GX140, GX160, & GX200<br>1.830" dia. x 1.380" height<br>Includes o-ring and nut | | |
| **49-307** | Tecumseh 631700 | **Float Bowl**<br>For most Tecumseh-built carburetors<br>Use Oregon® 49-841 bowl gasket | | |
| **49-308** | Tecumseh 631867 | **Carburetor Bowl** | | |

C

# Carburetor Parts

| OREGON | Replaces | Description | Product Code |
|---|---|---|---|

## Carburetor Float Bowl Assembly – Repair Kits

| | | | |
|---|---|---|---|
| **49-237** | Tecumseh 730638 | **Float Bowl Assembly Repair Kit**<br>Fits Tecumseh carburetors 640065, 640065A, & 640176, engines OHV110, OHV115, OHV120, OHV130, & OHV135 | |
| **49-238** | Tecumseh 730639 | **Float Bowl Assembly Repair Kit**<br>Fits Tecumseh carburetors 632786A, 640034, 640034A, 640072, 640072A, & 640159, engines OHV135, OHV14, OHV140, OHV145, OHV15, OHV150, OHV155, OHV16, OHV160, OHV165, OHV17, OHV170, & OHV175 | |
| **49-240** | Tecumseh 730235B | **Float Bowl Assembly Repair Kit**<br>Fits Tecumseh carburetors 632671, 632671A, 632671B, & 632671C, use on VLV126, VLV40, VLV50, VLV55, VLV60, VLV65, VLV66, VLX50, & VLX55 (non-EPA) | |
| **49-241** | Tecumseh 730637A | **Float Bowl Assembly Repair Kit**<br>Fits Tecumseh carburetors 640020, 640020A, 640020B, 640158, & 640158A, use on VLV126, VLV50, VLV55, VLV60, VLV65, & VLV66 | |

## Carburetor Float Bowl Gaskets

| | | | |
|---|---|---|---|
| **49-999** | | **Carb Bowl Gasket Kit with Bowl Nut**<br>For Oregon® 49-995,<br>Fits GX110, GX120, GX140, GX160, & GX200<br>1.830" dia. x 1.380" height | |
| **49-300** | Lawn Boy 683778<br>John Deere AM104806 | **Carburetor Bowl Gasket Kit**<br>For newer Lawn Boy mowers with Walbro carburetors | 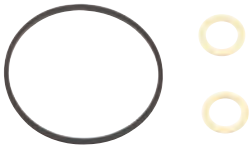 |
| **49-815** | Honda 16010-883-005 | **Carburetor Bowl Gasket Kit**<br>Fits HR21 series with Pulsa-jet carburetors | |
| **49-841** | Tecumseh 631028 | **Carburetor Bowl Gasket**<br>Fits Tecumseh float bowls 631867 & 631700 | |
| **49-998** | | **Carb Bowl Gasket Kit with Bowl Nut**<br>For Oregon® 49-994<br>Fits G100 & G200 series engines | |

C

| OREGON | Replaces | Description | Product Code |
|---|---|---|---|

## Carburetor Float Bowl Gaskets

| | | | |
|---|---|---|---|
| **49-160** | Briggs & Stratton 27034 | **Carburetor Body Gasket**<br>Fits models 142000 thru 147000, 252000, 301000, & 325000 | |
| **49-123** | Briggs & Stratton 27918<br>Briggs & Stratton 394209 | **Carburetor Body Gasket**<br>Fits models 142700, 147000, 170000, 190000, 191000, & 200000 | |
| **49-246** | Briggs & Stratton 281165S | **Carburetor Bowl Gasket**<br>Fits LMT Walbro carburetors used on model 192400 engines | 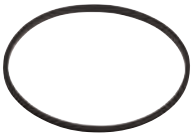 |
| **49-986** | Honda 16010-883-015 | **Carburetor Float Bowl Gasket**<br>Fits GCV135/160, G-15, G-200, G-300, & G-400 | |
| **49-608** | Honda 16010-ZE2-812 | **Float Bowl Gasket Kit** - NEW<br>Fits GX240, GX270, GX340, & GX390 | |
| **50-502** | Lawn Boy 602850 | **Carburetor Bowl Gasket**<br>For F series engines<br>2-3/4" x 2-1/4" | 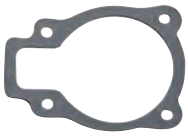 |
| **49-315** | Walbro 92-351 | **Carburetor Bowl Gasket**<br>For LMF carburetors | |

## Fuel Screens

| | | | |
|---|---|---|---|
| **55-340** | Tillotson 95-197 | **Fuel Screen**<br>For HK series | |
| **55-342** | Walbro 140-70-08 | **Fuel Screen**<br>Fits HDA, HDB, HDC, SDC, WA, WAT, WB, WS, WT, WTA, WY, & WYP | |
| **55-343** | Walbro 140-69-08 | **Fuel Screen**<br>Fits HDA, HDB, HDC, SDC, WA, WAT, WTA, WT, & WB | 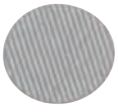 |

C

# Carburetor Parts

| OREGON | Replaces | Description | Product Code |
|---|---|---|---|

## Needle Valves / Kits

| | | | |
|---|---|---|---|
| **49-210** | Briggs & Stratton 231855S | **Float Valve**<br>For Walbro carburetors | |
| **49-077** | Briggs & Stratton 299060 | **Needle Valve Kit**<br>For 3, 3.5, and 5 HP engines | |
| **49-033** | Briggs & Stratton 394681 | **Float Valve and Seat Kit**<br>7 – 18 HP engines, model series 170400 thru 422700 | |
| **49-038** | Briggs & Stratton 394682 | **Float Valve and Seat Kit**<br>Fits 7 thru 16 HP engines with press-in brass seat | |
| **49-360** | Briggs & Stratton 394683 | **Float Valve and Seat Kit**<br>Fits large two-piece Flo-jet carburetors | |
| **49-036** | Briggs & Stratton 398188 | **Float Valve and Seat Kit**<br>For Max and Quantum series engines<br>Fits Walbro carburetors models 83400, 90700, 91700, 93452, 99700, 111700, 114700, 121700, 12G700, 12G800, 133700, & 135700 series | |
| **49-218** | Briggs & Stratton 494788 | **Float Valve and Seat Kit**<br>For Walbro carburetors | |
| **49-359** | Briggs & Stratton 715075 | **Float Valve**<br>Fits 115400 series engines | |
| **49-361** | Briggs & Stratton 715155 | **Float Valve**<br>Fits 185400 series engines | |
| **49-997** | Honda 16011-ZA0-931 | **Float Valve**<br>Fits models GX240, GX270, GX340, & GX390 series engines | |

C

| OREGON | Replaces | Description | Product Code | |
|---|---|---|---|---|

## Needle Valves / Kits

| | | | | |
|---|---|---|---|---|
| **49-996** | Honda 16011-ZE0-005 | **Float Valve**<br>Fits models GX110, GX120, GX140,<br>& GX160 series engines | | |
| **49-035** | Lawn Boy 396521<br>Lawn Boy 92-9697 | **Float Valve and Seat Kit**<br>For Lawn Boy-built carburetors<br>Fits D-600 and F series engines<br>7 – 18 HP horizontal engines | | |
| **49-244** | Oregon® | **Needle Valve**<br>For Oregon carburetors only<br>Fits Oregon 50-640, 50-648, 50-650,<br>50-653, 50-651, 50-646, 50-656,<br>50-655, 50-659, 50-662, 50-663, 50-664,<br>50-665, & 50-666 carburetors | | |
| **49-039** | Tecumseh 630932A | **Needle and Seat Kit**<br>Diaphragm carburetors on<br>LAV series and H22 thru H40 4-cycle<br>engines and 638, 650 and 670 2-cycle engines | | |
| **49-025** | Tecumseh 631021 | **Float Valve and Seat Kit**<br>3.5 – 18 HP horizontal engines<br>Fits all Tecumseh-built carburetors | | |
| **49-916** | Tecumseh 631021B | **Inlet Needle and Seat with Gaskets**<br>Fits many Tecumseh-built carburetors | | |
| **49-021** | Tillotson 34-188<br>Tillotson 34-216<br>Walbro 82-26, 82-75, 82-76<br>Zama 0018002 | **Needle Valve**<br>7 – 18 HP horizontal engines<br>5/8" length needle<br>Viton tip | | |
| **49-023** | Tillotson 34-210<br>Tillotson 34-219<br>Walbro 82-82 / 82-87<br>Zama 0018004 | **Needle Valve**<br>3/8" length needle<br>Viton tip | | |

## Primer Bulbs

| | | | |
|---|---|---|---|
| **49-058** | Briggs & Stratton 494408 | **Primer Bulb**<br>Fits Quantum series engines<br>3.5, 3.75 and 4 HP engines<br>Fits models with Pulsa-Prime carburetors | |
| **49-079** | Briggs & Stratton 496115 | **Primer Bulb**<br>Fits Quantum engines<br>5, 5.5, and 6 HP engines | |

C

# Carburetor Parts

| OREGON | Replaces | Description | Product Code |
|---|---|---|---|

## Primer Bulbs

| | | | |
|---|---|---|---|
| **49-609** | Briggs & Stratton 793382 | **Primer Bulb Assembly** - NEW<br>Fits most 10D000, 120000, 12A000, 12D000, & 12C000 models | |
| **49-326** | MTD 951-10639A<br>MTD 951-10639<br>MTD 751-10639A<br>MTD 751-10639<br>Cub Cadet 951-10639A<br>Cub Cadet 951-10639<br>Cub Cadet 751-10639A<br>Cub Cadet 751-10639 | **Primer Assembly**<br>Fits 31A model series snow throwers (2008–2014) | |
| **49-611** | MTD 951-10639<br>MTD 951-10639A<br>MTD 951-10888B | **Primer Bulb** - NEW<br>Fits 161-JW, 161-JWA, 165-SU, 478-SU, 483-SU,<br>365-SUA, 490-SU, 365-SUB, 370-SUB, & 370-SUA<br>Height: 1", outer diameter: 1-5/8" | |
| **55-118** | Kawasaki 49043-2065 | **Primer Bulb**<br>Models TD18, TD24, & TG33 | |
| **49-034** | Tecumseh 632047 | **Primer Bulb**<br>Fits TNT100, TNT120, ECV105,<br>ECV110, ECV120, & TVS series<br>With retainer clip, OD: 1", height: 3/4" | |
| **49-085** | Tecumseh 36045A<br>Tecumseh 640259 | **Primer Bulb**<br>Fits VLV-126, VLV-50, VLV-60, VLV-65,<br>& VLV-66 model Vector series engines | |
| **49-231** | Tecumseh 632694A | **Primer Bulb**<br>With vent hole<br>Fits VLV and LEV engines | |
| **49-444** | Poulan 530038874 | **Primer Bulb**<br>For trimmer models BC2400, GTI16, GTI15, GTI17, GTI18, GTI19,<br>LT17, LT7000, LT7500, PP111, PP114, PP115, PP165, PP175,<br>PP176, PP185, PP195, PT7000, PROLITE, XT20, XT30, XT45,<br>XT90, & XT125 | |
| **49-443** | Poulan 530071835 | **Primer Bulb**<br>For chainsaw models 222, 255, 262, 1900, 1950, 2025, 2050,<br>2075, 2055, 2150, 2155, 2175, 2250, 2350, 2375, 2450, 2550,<br>BH2160, BH2660, PP210, PP220, PP221, PP230, PP260,<br>PPB1634, PPB1838, & SM4018 | |

C

| OREGON | Replaces | Description | Product Code | |
|---|---|---|---|---|

## Primer Bulbs

| | | | |
|---|---|---|---|
| **49-088-0** | Ryobi 683974<br>Walbro 188-512<br>MTD 791-683974B | **Primer Bulb**<br>For WT23A,WYJ33, WYJ34, WYJ45, & WYJ86 carburetors | |
| **49-612** | Husqvarna 505 30 67-01<br>Shindaiwa 68206-81430<br>Shindaiwa 20036-81670<br>Shindaiwa 70029-81480<br>Shindaiwa 188-121<br>Shindaiwa 123181-09560 | **Primer Bulb** - NEW<br>Fits Red Max/Shindaiwa AH230, AH231, AH242, AH2510, AHS231, AHS242, AHS2510, DH230, DH231, HT230, HT231, LE230, P230, P231, PB230, PB3410, C242, C282, C2510, EB240S, EB480, EB500, EB630, EB802, EB2510, EB3410, T231, T242, T282, & T3410; Walbro/Echo PB260, PB261, PB500H, PB650, PE2400, PE260, PE280, PE310, PE3100, PE311, SRM3001, SRM3010, SRM310, SRM3100, SRM311, SRM3110, SRM340, GT1100, & GT2200 |  |
| **49-020** | Walbro 188-12 | **Primer Bulb**<br>OD: .60", height: .55" |  |
| **55-187** | Walbro 188-506 | **Primer Bulb**<br>Fits model WA-135, WA-148A, WA-150, WA-154, WA161, & WA-162 carburetors | |
| **55-188** | Walbro 188-508 | **Primer Bulb**<br>Fits model HDA-97 carburetor | |
| **55-189** | Walbro 188-509 | **Primer Bulb**<br>Fits model HDA-51, WA-180, WA-181, WA-184 WA-185, WA-187, WA-194, WT139, WT-145, WT-184, WT-243, & WT50 carburetors | |

C

Can't find what you're looking for?
Try us online to search the latest products available.

OregonProducts.com

# Carburetor Parts

| OREGON | Replaces | Description | Product Code |
|---|---|---|---|

## Primer Bulbs

| | | | |
|---|---|---|---|
| **49-610** | Walbro AYP47721,<br>Echo 12318110860<br>Echo 12318139130<br>Echo 3801081330<br>Echo 5213001400<br>Homelite 01183<br>Homelite 1183<br>Homelite 300780002<br>Homelite 308088001<br>Husqvarna 503936601<br>Husqvarna 530047721<br>Makita 168398-2<br>MTD 753-1185<br>MTD 791-180000B<br>MTD 791-181558<br>MTD 791-181801<br>MTD 791-683974<br>MTD 791-683974B<br>MTD 791-BQ03241<br>Poulan 530047721<br>Red Max 530047721<br>Ryobi 683974<br>Ryobi 791-683974 B<br>Stihl 4130 350 6200<br>Tanaka 6685139<br>Walbro 188-512<br>Walbro 188-512-1 | **Primer Bulb** - NEW<br>Fits Husqvarna K750 & K760 cut-off saws<br>and many chainsaws, blowers, hedge trimmers,<br>and string trimmers<br>Height: 1-5/16", outer diameter: 7/8" | |
| **49-026** | Walbro 188-11 | **Primer Bulb**<br>For WZ series<br>OD: .575", height: .390" | |
| **49-027** | Walbro 188-13 | **Primer Bulb**<br>For HDA series<br>OD: .725", height: .60" |  |
| **49-028** | Zama 0057003 | **Primer Bulb**<br>For C1Q series<br>OD: .675", height: .575" |  |

## Throttle Shaft

| | | | |
|---|---|---|---|
| **49-054** | Briggs & Stratton 491006 | **Throttle Shaft**<br>For 8, 10, 11, and 12 HP vertical engines | |

## Welch Plugs

| | | | |
|---|---|---|---|
| **53-005** | Tecumseh 631027 | **Welch Plug**<br>9/16" | |
| **53-006** | Tecumseh 630748 | **Welch Plug**<br>7/16" | |

C

| OREGON | Replaces | Description | Product Code | |
|---|---|---|---|---|

## Welch Plugs

| | | | | |
|---|---|---|---|---|
| **55-332** | Tillotson 179-60 | **Welch Plug**<br>For HS series,<br>7/32" diameter | | |
| **55-333** | Walbro 88-28<br>Walbro 88-171 | **Welch Plug**<br>For WA series, Walbro 630746<br>5/16" diameter | | |
| **55-334** | Walbro 88-89 | **Welch Plug**<br>WA series<br>5/32" diameter | | |

C

# Carburetor Kit Reference

| OEM CARBURETOR | | | OREGON | |
|---|---|---|---|---|
| Model | Kit | Gaskets | Kit | Gaskets |
| **Walbro** | | | | |
| HD-10B | K10-HD | D10-HD | 49-849 | 49-847 |
| HD-1-1 | K10-HD | D10-HD | 49-849 | 49-847 |
| HD-11A | K10-HD | D10-HD | 49-849 | 49-847 |
| HD-12-1 | K10-HD | D10-HD | 49-849 | 49-847 |
| HD-13-1 | K10-HD | D10-HD | 49-849 | 49-847 |
| HD-14 | K10-HD | D10-HD | 49-849 | 49-847 |
| HD-15 | K10-HD | D10-HD | 49-849 | 49-847 |
| HD-16 | K10-HD | D10-HD | 49-849 | 49-847 |
| HD-17 | K10-HD | D10-HD | 49-849 | 49-847 |
| HD-18A | K10-HD | D10-HD | 49-849 | 49-847 |
| HD-19A | K10-HD | D10-HD | 49-849 | 49-847 |
| HD-20-1 | K20-HD | D20-HD | | |
| HD-2-1 | K10-HD | D10-HD | 49-849 | 49-847 |
| HD-21A | K10-HD | D10-HD | 49-849 | 49-847 |
| HD-22-1 | K10-HD | D10-HD | 49-849 | 49-847 |
| HD-30-1 | K20-HD | D20-HD | | |
| HD-3-1 | K10-HD | D10-HD | 49-849 | 49-847 |
| HD-40-318 | K20-HD | D10-HD | | 49-847 |
| HD-4-1 | K10-HD | D10-HD | 49-849 | 49-847 |
| HD-43-1 | K10-HD | D10-HD | 49-849 | 49-847 |
| HD44-1 | K10-HD | D10-HD | 49-849 | 49-847 |
| HD-48-1 | K10-HD | D10-HD | 49-849 | 49-847 |
| HD-5-1 | K10-HD | D10-HD | 49-849 | 49-847 |
| HD-55-1 | K21-HD | | | |
| HD-56-1 | K21-HD | | | |
| HD-6-1 | K10-HD | D10-HD | 49-849 | 49-847 |
| HD-7-1 | K10-HD | D10-HD | 49-849 | 49-847 |
| HD-8A | K10-HD | D10-HD | 49-849 | 49-847 |
| HD-9A | K10-HD | D10-HD | 49-849 | 49-847 |
| HDA-10-1 | K20-HDA | D10-HDA | 49-845 | 49-835 |
| HDA-101-1 | K20-HDA | D10-HDA | 49-845 | 49-835 |
| HDA-102-1 | K20-HDA | D10-HDA | 49-845 | 49-835 |
| HDA-103-1 | K20-HDA | D10-HDA | 49-845 | 49-835 |
| HDA-104-1 | K20-HDA | D10-HDA | 49-845 | 49-835 |
| HDA-105-1 | K12-HDA | D11-HDA | | |
| HDA-106-1 | K20-HDA | D10-HDA | 49-845 | 49-835 |
| HDA-107-1 | k20-HDA | D10-HDA | | 49-835 |
| HDA-108-1 | K20-HDA | D10-HDA | 49-845 | 49-835 |
| HDA-109-1 | K20-HDA | D10-HDA | 49-845 | 49-835 |
| HDA-1-1 | K20-HDA | D10-HDA | 49-845 | 49-835 |
| HDA-110-1 | K20-HDA | D10-HDA | 49-845 | 49-835 |
| HDA-111-1 | K20-HDA | D10-HDA | 49-845 | 49-835 |
| HDA-112-1 | K12-HDA | D11-HDA | | |
| HDA-113-2 | K12-HDA | D11-HDA | | |
| HDA-114-1 | K20-HDA | D10-HDA | 49-845 | 49-835 |
| HDA-115-1 | K20-HDA | D10-HDA | 49-845 | 49-835 |
| HDA-116 | K20HDA | D10HDA | 49-845 | 49-835 |
| HDA-116-1 | K20-HDA | D10-HDA | 49-845 | 49-835 |
| HDA-117-1 | K20-HDA | D10-HDA | 49-845 | 49-835 |
| HDA-118 | K20HDA | D10HDA | 49-845 | 49-835 |
| HDA-118-1 | K20-HDA | D10-HDA | 49-845 | 49-835 |
| HDA-119-1 | K20-HDA | D10-HDA | 49-845 | 49-835 |
| HDA-120-1 | K20-HDA | D10-HDA | 49-845 | 49-835 |
| HDA-12-1 | K20-HDA | D10-HDA | 49-845 | 49-835 |
| HDA-122-1 | K20-HDA | D10-HDA | 49-845 | 49-835 |
| HDA-123-1 | K23-HDA | D20-HDA | | 49-835 |
| HDA-125-1 | K20-HDA | D10-HDA | 49-845 | 49-835 |
| HDA-126-1 | K20-HDA | D10-HDA | 49-845 | 49-835 |
| HDA-127-1 | K10-HDA | D10-HDA | | 49-835 |
| HDA-128-1 | K20-HDA | D10-HDA | 49-845 | 49-835 |
| HDA-130-1 | K20-HDA | D10-HDA | 49-845 | 49-835 |
| HDA-13-1 | K20-HDA | D10-HDA | 49-845 | 49-835 |
| HDA-131-1 | K20-HDA | D10-HDA | 49-845 | 49-835 |
| HDA-132-1 | K23-HDA | D20-HDA | | 49-835 |
| HDA-133-1 | K20-HDA | D10-HDA | 49-845 | 49-835 |
| HDA-134-1 | K12-HDA | D11-HDA | | |
| HDA-135-1 | K20-HDA | D10-HDA | 49-845 | 49-835 |
| HDA-136 | K20HDA | D10HDA | 49-845 | 49-835 |
| HDA-136-1 | K20-HDA | D10-HDA | 49-845 | 49-835 |
| HDA-137-1 | K20-HDA | D10-HDA | 49-845 | 49-835 |
| HDA-138-1 | K20-HDA | D10-HDA | 49-845 | 49-835 |
| HDA-139 | K20HDA | D10HDA | 49-845 | 49-835 |
| HDA-139-1 | K20-HDA | D10-HDA | 49-845 | 49-835 |
| HDA-140-1 | K21-HDA | D10-HDA | | 49-835 |
| HDA-14-1 | K20-HDA | D10-HDA | 49-845 | 49-835 |
| HDA-141-1 | K20-HDA | D10-HDA | 49-845 | 49-835 |
| HDA-142-1 | K21-HDA | D10-HDA | | 49-835 |
| HDA-143-1 | K20-HDA | D10-HDA | 49-845 | 49-835 |

| OEM CARBURETOR | | | OREGON | |
|---|---|---|---|---|
| Model | Kit | Gaskets | Kit | Gaskets |
| **Walbro** | | | | |
| HDA-144-1 | K20-HDA | D10-HDA | 49-845 | 49-835 |
| HDA-145-1 | K12-HDA | D11-HDA | | |
| HDA-146-1 | K20-HDA | D10-HDA | 49-845 | 49-835 |
| HDA-147-1 | K12-HDA | D11-HDA | | |
| HDA-148-1 | K20-HDA | D10-HDA | 49-845 | 49-835 |
| HDA-149 | K20HDA | D10HDA | 49-845 | 49-835 |
| HDA-150-1 | K12-HDA | D11-HDA | | |
| HDA-15-1 | K22-HDA | D22-HDA | 49-853 | 49-852 |
| HDA-151-1 | K12-HDA | D11-HDA | | |
| HDA-153-1 | K25-HDA | | | |
| HDA-154-1 | K22-HDA | D22-HDA | 49-853 | 49-852 |
| HDA-155-1 | K22-HDA | D22-HDA | 49-853 | 49-852 |
| HDA-156-1 | K20-HDA | D10-HDA | 49-845 | 49-835 |
| HDA-157-1 | K23-HDA | D20-HDA | | 49-835 |
| HDA-158-1 | K22-HDA | D22-HDA | 49-853 | 49-852 |
| HDA-159-1 | K21-HDA | D10-HDA | | 49-835 |
| HDA-160-1 | K22-HDA | D22-HDA | 49-853 | 49-852 |
| HDA-162-1 | K22-HDA | D22-HDA | 49-853 | 49-852 |
| HDA-164-1 | K22-HDA | D22-HDA | 49-853 | 49-852 |
| HDA-165-1 | K22-HDA | D22-HDA | 49-853 | 49-852 |
| HDA-166-1 | K12-HDA | D11-HDA | | |
| HDA-167-1 | K12-HDA | D11-HDA | | |
| HDA-168-1 | K22-HDA | D22-HDA | 49-853 | 49-852 |
| HDA-169-1 | K22-HDA | D22-HDA | 49-853 | 49-852 |
| HDA-170-1 | K22-HDA | D22-HDA | 49-853 | 49-852 |
| HDA-17-1 | K22-HDA | D22-HDA | 49-853 | 49-852 |
| HDA-171-1 | K24-HDA | D24-HDA | | |
| HDA-172-1 | K22-HDA | D22-HDA | 49-853 | 49-852 |
| HDA-173-1 | K22-HDA | D22-HDA | 49-853 | 49-852 |
| HDA-174-1 | K24-HDA | D24-HDA | | |
| HDA-175-1 | K24-HDA | D24-HDA | | |
| HDA-176-1 | K20-HDA | D20-HDA | 49-845 | 49-835 |
| HDA-177-1 | K20-HDA | D11-HDA | 49-845 | |
| HDA-178-1 | K22-HDA | D22-HDA | 49-853 | 49-852 |
| HDA-179-1 | K22-HDA | D22-HDA | 49-853 | 49-852 |
| HDA-180-1 | K20-HDA | D20-HDA | 49-845 | 49-835 |
| HDA-18-1 | K22-HDA | D22-HDA | 49-853 | 49-852 |
| HDA-181-1 | K24-HDA | D24-HDA | | |
| HDA-182-1 | K24-HDA | D20-HDA | | 49-835 |
| HDA-183-1 | K20-HDA | D22-HDA | 49-845 | 49-852 |
| HDA-184-1 | K20-HDA | D20-HDA | 49-845 | 49-835 |
| HDA-187-1 | K22-HDA | D22-HDA | 49-853 | 49-852 |
| HDA-188-1 | K22-HDA | D22-HDA | 49-853 | 49-852 |
| HDA-189-1 | K25-HDA | | | |
| HDA-190-1 | K24-HDA | D24-HDA | | |
| HDA-19-1 | K20-HDA | D10-HDA | 49-845 | 49-835 |
| HDA-191-1 | K24-HDA | D24-HDA | | |
| HDA-192-1 | K22-HDA | D22-HDA | 49-853 | 49-852 |
| HDA-193-1 | K22-HDA | D22-HDA | 49-853 | 49-852 |
| HDA-195-1 | K22-HDA | D22-HDA | 49-853 | 49-852 |
| HDA-196-1 | K22-HDA | D22-HDA | 49-853 | 49-852 |
| HDA-197-1 | K23-HDA | D20-HDA | | 49-835 |
| HDA-198-1 | K24-HDA | D24-HDA | | |
| HDA-199-1 | K24-HDA | D24-HDA | | |
| HDA-20-1 | K20-HDA | D10-HDA | 49-845 | 49-835 |
| HDA-201-1 | K12-HDA | D11-HDA | | |
| HDA-202-1 | K12-HDA | D11-HDA | | |
| HDA-203-1 | K12-HDA | D11-HDA | | |
| HDA-204-1 | K12-HDA | D11-HDA | | |
| HDA-205-1 | K22-HDA | D22-HDA | 49-853 | 49-852 |
| HDA-206-1 | K12-HDA | D11-HDA | | |
| HDA-207-1 | K12-HDA | D11-HDA | | |
| HDA-208-1 | K21-HDA | D11-HDA | | |
| HDA-209-1 | K12-HDA | D11-HDA | | |
| HDA-210-1 | K20-HDA | D11-HDA | 49-845 | |
| HDA-21-1 | K20-HDA | D10-HDA | 49-845 | 49-835 |
| HDA-211-1 | K21-HDA | D14-HDA | | |
| HDA-212-1 | K21-HDA | D14-HDA | | |
| HDA-213-1 | K13-HDA | D11-HDA | | |
| HDA-214-1 | K21-HDA | D13-HDA | | |
| HDA-215-1 | K20-HDA | D20-HDA | 49-845 | 49-835 |
| HDA-216-1 | K20-HDA | D20-HDA | 49-845 | 49-835 |
| HDA-217-1 | K21-HDA | D14-HDA | | |
| HDA-218-1 | K20-HDA | D20-HDA | 49-845 | 49-835 |
| HDA-219-1 | K21-HDA | D13-HDA | | |
| HDA-220-1 | K20-HDA | D11-HDA | 49-845 | |
| HDA-22-1 | K20-HDA | D10-HDA | 49-845 | 49-835 |
| HDA-221-1 | K20-HDA | D13-HDA | 49-845 | |

| OEM CARBURETOR | | | OREGON | |
|---|---|---|---|---|
| Model | Kit | Gaskets | Kit | Gaskets |
| **Walbro** | | | | |
| HDA-222-1 | K21-HDA | D20-HDA | | 49-835 |
| HDA-223-1 | K20-HDA | D20-HDA | 49-845 | 49-835 |
| HDA-224-1 | K20-HDA | D20-HDA | 49-845 | 49-835 |
| HDA-225-1 | K20-HDA | D20-HDA | 49-845 | 49-835 |
| HDA-226-1 | K20-HDA | D20-HDA | 49-845 | 49-835 |
| HDA-227-1 | K20-HDA | D20-HDA | 49-845 | 49-835 |
| HDA-228-1 | K20-HDA | D20-HDA | 49-845 | 49-835 |
| HDA-229-1 | K20-HDA | D20-HDA | 49-845 | 49-835 |
| HDA-230-1 | K20-HDA | D20-HDA | 49-845 | 49-835 |
| HDA-23-1 | K20-HDA | D10-HDA | 49-845 | 49-835 |
| HDA-231-1 | K20-HDA | D20-HDA | 49-845 | 49-835 |
| HDA-232-1 | K20-HDA | D20-HDA | 49-845 | 49-835 |
| HDA-233-1 | K20-HDA | D11-HDA | 49-845 | |
| HDA-234-1 | K20-HDA | D11-HDA | 49-845 | |
| HDA-235-1 | K20-HDA | D20-HDA | 49-845 | 49-835 |
| HDA-236-1 | K20-HDA | D11-HDA | 49-845 | |
| HDA-238-1 | K20-HDA | D11-HDA | 49-845 | |
| HDA-239-1 | K20-HDA | D11-HDA | 49-845 | |
| HDA-24-1 | K20-HDA | D10-HDA | 49-845 | 49-835 |
| HDA-244-1 | K20-HDA | D11-HDA | 49-845 | |
| HDA-246-1 | K20-HDA | D11-HDA | 49-845 | |
| HDA-248-1 | K20-HDA | D11-HDA | 49-845 | |
| HDA-255-1 | K21-HDA | D20-HDA | | 49-835 |
| HDA-256-1 | K21-HDA | D20-HDA | | 49-835 |
| HDA-258-1 | K20-HDA | D20-HDA | 49-845 | 49-835 |
| HDA-26-1 | K12-HDA | D11-HDA | | |
| HDA-268-1 | K20-HDA | D20-HDA | 49-845 | 49-835 |
| HDA-269-1 | K20-HDA | D20-HDA | 49-845 | 49-835 |
| HDA-27-1 | K20-HDA | D10-HDA | 49-845 | 49-835 |
| HDA-271-1 | K20-HDA | D20-HDA | 49-845 | 49-835 |
| HDA-272-1 | K20-HDA | D20-HDA | 49-845 | 49-835 |
| HDA-274-1 | K20-HDA | D20-HDA | 49-845 | 49-835 |
| HDA-275-1 | K22-HDA | | 49-853 | |
| HDA-28-1 | K20-HDA | D10-HDA | 49-845 | 49-835 |
| HDA-285-1 | K20-HDA | D20-HDA | 49-845 | 49-835 |
| HDA-286-1 | K27-HDA | D20-HDA | | 49-835 |
| HDA-29-1 | K20-HDA | D10-HDA | 49-845 | 49-835 |
| HDA-297-1 | K20-HDA | | 49-845 | |
| HDA-30-1 | K20-HDA | D10-HDA | 49-845 | 49-835 |
| HDA-301-1 | K20-HDA | | 49-845 | |
| HDA-308-1 | K27-HDA | | | |
| HDA-3-1 | K20-HDA | D10-HDA | 49-845 | |
| HDA-31-1 | K22-HDA | D22-HDA | 49-853 | 49-852 |
| HDA-32-1 | K22-HDA | D22-HDA | 49-853 | 49-852 |
| HDA-33-1 | K20-HDA | D10-HDA | 49-845 | 49-835 |
| HDA-34-1 | K20-HDA | D10-HDA | 49-845 | 49-835 |
| HDA-35-1 | K20-HDA | D10-HDA | 49-845 | 49-835 |
| HDA-36-1 | K20-HDA | D10-HDA | 49-845 | 49-835 |
| HDA-40-1 | K20-HDA | D10-HDA | 49-845 | 49-835 |
| HDA-41-1 | K20-HDA | D10-HDA | 49-845 | 49-835 |
| HDA-42-1 | K20-HDA | D10-HDA | 49-845 | 49-835 |
| HDA-43-1 | K20-HDA | D10-HDA | 49-845 | 49-835 |
| HDA-44-1 | K12-HDA | D11-HDA | | |
| HDA-45-1 | K20-HDA | D10-HDA | 49-845 | 49-835 |
| HDA-46-1 | K20-HDA | D10-HDA | 49-845 | 49-835 |
| HDA-47-1 | K20-HDA | D10-HDA | 49-845 | 49-835 |
| HDA-48-1 | K20-HDA | D10-HDA | 49-845 | 49-835 |
| HDA-49-1 | K20-HDA | D10-HDA | 49-845 | 49-835 |
| HDA-50-1 | K20-HDA | D10-HDA | 49-845 | 49-835 |
| HDA-51-1 | K12-HDA | D11-HDA | | |
| HDA-52-1 | K20-HDA | D10-HDA | 49-845 | 49-835 |
| HDA-53-1 | K12-HDA | D11-HDA | | |
| HDA-54-1 | K22-HDA | D22-HDA | 49-853 | 49-852 |
| HDA-55-1 | K20-HDA | D10-HDA | 49-845 | 49-835 |
| HDA-56-1 | K22-HDA | D22-HDA | 49-853 | 49-852 |
| HDA-57-1 | K20-HDA | D10-HDA | 49-845 | 49-835 |
| HDA-58-1 | K20-HDA | D10-HDA | 49-845 | 49-835 |
| HDA-59-1 | K20-HDA | D10-HDA | 49-845 | 49-835 |
| HDA-60-1 | K20-HDA | D10-HDA | 49-845 | 49-835 |
| HDA-6-1 | K20-HDA | D10-HDA | 49-845 | 49-835 |
| HDA-61-1 | K20-HDA | D10-HDA | 49-845 | 49-835 |
| HDA-62-1 | K12-HDA | D11-HDA | | |
| HDA-63-1 | K20-HDA | D10-HDA | 49-845 | 49-835 |
| HDA-64-1 | K20-HDA | D10-HDA | 49-845 | 49-835 |
| HDA-66-1 | K20-HDA | D10-HDA | 49-845 | 49-835 |
| HDA-67-1 | K22-HDA | D22-HDA | 49-853 | 49-852 |
| HDA-68-1 | K22-HDA | D22-HDA | 49-853 | 49-852 |
| HDA-69-1 | K22-HDA | D22-HDA | 49-853 | 49-852 |

C

| OEM CARBURETOR | | | OREGON | |
|---|---|---|---|---|
| Model | Kit | Gaskets | Kit | Gaskets |
| **Walbro** | | | | |
| HDA-70-1 | K12-HDA | D11-HDA | | |
| HDA-7-1 | K22-HDA | D22-HDA | 49-853 | 49-852 |
| HDA-71-1 | K20-HDA | D10-HDA | 49-845 | 49-835 |
| HDA-72-1 | K20-HDA | D10-HDA | 49-845 | 49-835 |
| HDA-73-1 | K22-HDA | D22-HDA | 49-853 | 49-852 |
| HDA-74-1 | K20-HDA | D10-HDA | 49-845 | 49-835 |
| HDA-75-1 | K20-HDA | D10-HDA | 49-845 | 49-835 |
| HDA-75X-1 | K20-HDA | D10-HDA | 49-845 | 49-835 |
| HDA-76-1 | K20-HDA | D10-HDA | 49-845 | 49-835 |
| HDA-77-1 | K22-HDA | D22-HDA | 49-853 | 49-852 |
| HDA-79-1 | K23-HDA | D20-HDA | | 49-835 |
| HDA-80-1 | K12-HDA | D11-HDA | | |
| HDA-82-1 | K12-HDA | D11-HDA | | |
| HDA-83-1 | K20-HDA | D10-HDA | 49-845 | 49-835 |
| HDA-84-1 | K22-HDA | D22-HDA | 49-853 | 49-852 |
| HDA-85-1 | K12-HDA | D11-HDA | | |
| HDA-86-1 | K22-HDA | D22-HDA | 49-853 | 49-852 |
| HDA-87-1 | K22-HDA | D22-HDA | 49-853 | 49-852 |
| HDA-88-1 | K22-HDA | D22-HDA | 49-853 | 49-852 |
| HDA-89-1 | K12-HDA | D11-HDA | | |
| HDA-90-1 | K12-HDA | D11-HDA | | |
| HDA-92-1 | K22-HDA | D22-HDA | 49-853 | 49-852 |
| HDA-93-1 | K22-HDA | D22-HDA | 49-853 | 49-852 |
| HDA-95-1 | K12-HDA | D11-HDA | | |
| HDA-96-1 | K22-HDA | D22-HDA | 49-853 | 49-852 |
| HDA-97-1 | K12-HDA | D11-HDA | | |
| HDA-98-1 | K22-HDA | D22-HDA | 49-853 | 49-852 |
| HDA-99-1 | K22-HDA | D22-HDA | 49-853 | 49-852 |
| HDB-10-1 | K10-HDB | D10-HDB | 49-832 | 49-806 |
| HDB-1-1 | K10-HDB | D10-HDB | 49-832 | 49-806 |
| HDB-11-1 | K10-HDB | D10-HDB | 49-832 | 49-806 |
| HDB-12-1 | K10-HDB | D10-HDB | 49-832 | 49-806 |
| HDB-13-1 | K10-HDB | D10-HDB | 49-832 | 49-806 |
| HDB-17-1 | K10-HDB | D10-HDB | 49-832 | 49-806 |
| HDB-18-1 | K10-HDB | D10-HDB | 49-832 | 49-806 |
| HDB-19-1 | K10-HDB | D10-HDB | 49-832 | 49-806 |
| HDB-2-1 | K10-HDB | D10-HDB | 49-832 | 49-806 |
| HDB-3-1 | K10-HDB | D10-HDB | 49-832 | 49-806 |
| HDB-4-1 | K10-HDB | D10-HDB | 49-832 | 49-806 |
| HDB-5-1 | K10-HDB | D10-HDB | 49-832 | 49-806 |
| HDB-6-1 | K10-HDB | D10-HDB | 49-832 | 49-806 |
| HDB-7-1 | K10-HDB | D10-HDB | 49-832 | 49-806 |
| HDB-8-1 | K10-HDB | D10-HDB | 49-832 | 49-806 |
| HDB-9-1 | K10-HDB | D10-HDB | 49-832 | 49-806 |
| HDC-1-1 | K10-HDC | D10-HDC | 49-833 | 49-807 |
| HDC-15-1 | K10-HDC | D10-HDC | 49-833 | 49-807 |
| HDC-16-1 | K10-HDC | D10-HDC | 49-833 | 49-807 |
| HDC-17-1 | K10-HDC | D10-HDC | 49-833 | 49-807 |
| HDC-20-1 | K10-HDC | D10-HDC | 49-833 | 49-807 |
| HDC-2-1 | K10-HDC | D10-HDC | 49-833 | 49-807 |
| HDC-21-1 | K10-HDC | D10-HDC | 49-833 | 49-807 |
| HDC-23-1 | K10-HDC | D10-HDC | 49-833 | 49-807 |
| HDC-26-1 | K10-HDC | D10-HDC | 49-833 | 49-807 |
| HDC-27-1 | K10-HDC | D10-HDC | 49-833 | 49-807 |
| HDC-28-1 | K10-HDC | D10-HDC | 49-833 | 49-807 |
| HDC-29-1 | K10-HDC | D10-HDC | 49-833 | 49-807 |
| HDC-3-1 | K10-HDC | D10-HDC | 49-833 | 49-807 |
| HDC-32-1 | K10-HDC | D10-HDC | 49-833 | 49-807 |
| HDC-33-1 | K10-HDC | D10-HDC | 49-833 | 49-807 |
| HDC-35-1 | K10-HDC | D10-HDC | 49-833 | 49-807 |
| HDC-37-1 | K10-HDC | D10-HDC | 49-833 | 49-807 |
| HDC-39-1 | K10-HDC | D10-HDC | 49-833 | 49-807 |
| HDC-40-1 | K10-HDC | D10-HDC | 49-833 | 49-807 |
| HDC-4-1 | K10-HDC | D10-HDC | 49-833 | 49-807 |
| HDC-41-1 | K10-HDC | D10-HDC | 49-833 | 49-807 |
| HDC-42-1 | K10-HDC | D10-HDC | 49-833 | 49-807 |
| HDC-44-1 | K10-HDC | D10-HDC | 49-833 | 49-807 |
| HDC-45-1 | K10-HDC | D10-HDC | 49-833 | 49-807 |
| HDC-46-1 | K10-HDC | D10-HDC | 49-833 | 49-807 |
| HDC-47-1 | K10-HDC | D10-HDC | 49-833 | 49-807 |
| HDC-48-1 | K10-HDC | D10-HDC | 49-833 | 49-807 |
| HDC-49-1 | K10-HDC | D10-HDC | 49-833 | 49-807 |
| HDC-50-1 | K10-HDC | D10-HDC | 49-833 | 49-807 |
| HDC-51-1 | K10-HDC | D10-HDC | 49-833 | 49-807 |
| HDC-52-1 | K10-HDC | D10-HDC | 49-833 | 49-807 |
| HDC-54-1 | K10-HDC | D10-HDC | 49-833 | 49-807 |
| HDC-55-1 | K10-HDC | D10-HDC | 49-833 | 49-807 |

| OEM CARBURETOR | | | OREGON | |
|---|---|---|---|---|
| Model | Kit | Gaskets | Kit | Gaskets |
| **Walbro** | | | | |
| HDC-57-1 | K10-HDC | D10-HDC | 49-833 | 49-807 |
| HDC-58-1 | K10-HDC | D10-HDC | 49-833 | 49-807 |
| HDC-59-1 | K10-HDC | D10-HDC | 49-833 | 49-807 |
| HDC-63-1 | K10-HDC | D10-HDC | 49-833 | 49-807 |
| HDC-64-1 | K10-HDC | D10-HDC | 49-833 | 49-807 |
| HDC-65-1 | K10-HDC | D10-HDC | 49-833 | 49-807 |
| HDC-66-1 | K10-HDC | D10-HDC | 49-833 | 49-807 |
| HDC-67-1 | K10-HDC | D10-HDC | 49-833 | 49-807 |
| HDC-68-1 | K10-HDC | D10-HDC | 49-833 | 49-807 |
| HDC-69-1 | K10-HDC | D10-HDC | 49-833 | 49-807 |
| HDC-70-1 | K10-HDC | D10-HDC | 49-833 | 49-807 |
| HDC-72-1 | K10-HDC | D10-HDC | 49-833 | 49-807 |
| HDC-73-1 | K10-HDC | D10-HDC | 49-833 | 49-807 |
| HDC-74-1 | K10-HDC | D10-HDC | 49-833 | 49-807 |
| HDC-75-1 | K10-HDC | D10-HDC | 49-833 | 49-807 |
| HDC-76-1 | K10-HDC | D10-HDC | 49-833 | 49-807 |
| HDC-77-1 | K10-HDC | D10-HDC | 49-833 | 49-807 |
| HDC-78-1 | K10-HDC | D10-HDC | 49-833 | 49-807 |
| HDC-80-1 | K10-HDC | D10-HDC | 49-833 | 49-807 |
| HDC-81-1 | K10-HDC | D10-HDC | 49-833 | 49-807 |
| LMB-118-1 | K1-LMB | G1-LM | 49-201 | |
| LMB-166-1 | K1-LMB | G1-LM | 49-201 | |
| LMB-167-1 | K1-LMB | G1-LM | 49-201 | |
| LMB-182-1 | K1-LMB | G1-LM | 49-201 | |
| LMB-195-1 | K3-LMB | G1-LM | 49-201 | |
| LMB-206-1 | K3-LMB | G1-LM | 49-201 | |
| LMB-215-1 | K5-LMB | G1-LM | 49-201 | |
| LMB-216-1 | K3-LMB | G1-LM | 49-201 | |
| LMB-218-1 | K3-LMB | G1-LM | 49-201 | |
| LMB-224-1 | K1-LMB | G1-LM | 49-201 | |
| LMB-229-1 | K5-LMB | G1-LM | 49-201 | |
| SDC-1-1 | K10-SDC | D10-SDC | 49-834 | 49-810 |
| SDC-16-1 | K10-SDC | D10-SDC | 49-834 | 49-810 |
| SDC-18-1 | K10-SDC | D10-SDC | 49-834 | 49-810 |
| SDC-2-1 | K10-SDC | D10-SDC | 49-834 | 49-810 |
| SDC-29-1 | K10-SDC | D10-SDC | 49-834 | 49-810 |
| SDC-3-1 | K10-SDC | D10-SDC | 49-834 | 49-810 |
| SDC-31-1 | K10-SDC | D10-SDC | 49-834 | 49-810 |
| SDC-33-1 | K10-SDC | D10-SDC | 49-834 | 49-810 |
| SDC-37-1 | K10-SDC | D10-SDC | 49-834 | 49-810 |
| SDC-38-1 | K10-SDC | D10-SDC | 49-834 | 49-810 |
| SDC-40-1 | K10-SDC | D10-SDC | 49-834 | 49-810 |
| SDC-41-1 | K10-SDC | D10-SDC | 49-834 | 49-810 |
| SDC-43-1 | K10-SDC | D10-SDC | 49-834 | 49-810 |
| SDC-44-1 | K10-SDC | D10-SDC | 49-834 | 49-810 |
| SDC-48-1 | K10-SDC | D10-SDC | 49-834 | 49-810 |
| SDC-49-1 | K10-WAT | D10-WAT | 49-816 | 49-812 |
| SDC-50-1 | K10-SDC | D10-SDC | 49-834 | 49-810 |
| SDC-51-1 | K10-SDC | D10-SDC | 49-834 | 49-810 |
| SDC-52-1 | K10-SDC | D10-SDC | 49-834 | 49-810 |
| SDC-53-1 | K10-SDC | D10-SDC | 49-834 | 49-810 |
| SDC-54-1 | K10-SDC | D10-SDC | 49-834 | 49-810 |
| SDC-58-1 | K10-SDC | D10-SDC | 49-834 | 49-810 |
| SDC-60-1 | K10-SDC | D10-SDC | 49-834 | 49-810 |
| SDC-62-1 | K10-SDC | D10-SDC | 49-834 | 49-810 |
| SDC-65-1 | K10-SDC | D10-SDC | 49-834 | 49-810 |
| SDC-68-1 | K10-SDC | D10-SDC | 49-834 | 49-810 |
| SDC-69-1 | K10-SDC | D10-SDC | 49-834 | 49-810 |
| SDC-70-1 | K10-SDC | D10-SDC | 49-834 | 49-810 |
| SDC-71-1 | K10-SDC | D10-SDC | 49-834 | 49-810 |
| SDC-73-1 | K10-SDC | D10-SDC | 49-834 | 49-810 |
| SDC-74-1 | K10-SDC | D10-SDC | 49-834 | 49-810 |
| SDC-76-1 | K10-SDC | D10-SDC | 49-834 | 49-810 |
| SDC-77-1 | K10-SDC | D10-SDC | 49-834 | 49-810 |
| SDC-78-1 | K10-SDC | D10-SDC | 49-834 | 49-810 |
| SDC-79-1 | K10-SDC | D10-SDC | 49-834 | 49-810 |
| SDC-80-1 | K10-SDC | D10-SDC | 49-834 | 49-810 |
| SDC-8-1 | K10-SDC | D10-SDC | 49-834 | 49-810 |
| SDC-81-1 | K10-SDC | D10-SDC | 49-834 | 49-810 |
| SDC-82-1 | K10-SDC | D10-SDC | 49-834 | 49-810 |
| SDC-83-1 | K10-SDC | D10-SDC | 49-834 | 49-810 |
| SDC-84-1 | K10-SDC | D10-SDC | 49-834 | 49-810 |
| SDC-85-1 | K10-SDC | D10-SDC | 49-834 | 49-810 |
| SDC-86-1 | K10-SDC | D10-SDC | 49-834 | 49-810 |
| SDC-87-1 | K10-SDC | D10-SDC | 49-834 | 49-810 |
| SDC-88-1 | K10-SDC | D10-SDC | 49-834 | 49-810 |
| SDC-89-1 | K10-SDC | D10-SDC | 49-834 | 49-810 |

| OEM CARBURETOR | | | OREGON | |
|---|---|---|---|---|
| Model | Kit | Gaskets | Kit | Gaskets |
| **Walbro** | | | | |
| WA-100-1 | K20-WAT | D20-WAT | 49-831 | 49-812 |
| WA-101-1 | K10-WAT | D10-WAT | 49-816 | 49-812 |
| WA-102-1 | K10-WAT | D10-WAT | 49-816 | 49-812 |
| WA-103-1 | K10-WAT | D10-WAT | 49-816 | 49-812 |
| WA-105-1 | K10-WAT | D10-WAT | 49-816 | 49-812 |
| WA-106-1 | K10-WAT | D10-WAT | 49-816 | 49-812 |
| WA-107-1 | K10-WAT | D10-WAT | 49-816 | 49-812 |
| WA-108-1 | K10-WAT | D10-WAT | 49-816 | 49-812 |
| WA-1-1 | K10-WAT | D10-WAT | 49-816 | 49-812 |
| WA-110-1 | K10-WAT | D10-WAT | 49-816 | 49-812 |
| WA-112-1 | K10-WAT | D10-WAT | 49-816 | 49-812 |
| WA-113-1 | K10-WAT | D10-WAT | 49-816 | 49-812 |
| WA-114-1 | K10-WAT | D10-WAT | 49-816 | 49-812 |
| WA-115-1 | K10-WAT | D10-WAT | 49-816 | 49-812 |
| WA-118-1 | K10-WAT | D10-WAT | 49-816 | 49-812 |
| WA-120-1 | K10-WAT | D10-WAT | 49-816 | 49-812 |
| WA-12-1 | K10-WAT | D10-WAT | 49-816 | 49-812 |
| WA-121-1 | K10-WAT | D10-WAT | 49-816 | 49-812 |
| WA-123-1 | K10-WAT | D10-WAT | 49-816 | 49-812 |
| WA-124-1 | K10-WAT | D10-WAT | 49-816 | 49-812 |
| WA-125-1 | K10-WAT | D10-WAT | 49-816 | 49-812 |
| WA-126-1 | K10-WAT | D10-WAT | 49-816 | 49-812 |
| WA-127-1 | K10-WAT | D10-WAT | 49-816 | 49-812 |
| WA-128-1 | K10-WAT | D10-WAT | 49-816 | 49-812 |
| WA-130-1 | K10-WAT | D10-WAT | 49-816 | 49-812 |
| WA-131-1 | K10-WAT | D10-WAT | 49-816 | 49-812 |
| WA-132-1 | K10-WAT | D10-WAT | 49-816 | 49-812 |
| WA-133-1 | K10-WAT | D10-WAT | 49-816 | 49-812 |
| WA-134-1 | K10-WAT | D10-WAT | 49-816 | 49-812 |
| WA-135-1 | K10-WAT | D10-WAT | 49-816 | 49-812 |
| WA-136-1 | K10-WAT | D10-WAT | 49-816 | 49-812 |
| WA-137-1 | K10-WAT | D10-WAT | 49-816 | 49-812 |
| WA-138-1 | K10-WAT | D10-WAT | 49-816 | 49-812 |
| WA-139-1 | K10-WAT | D10-WAT | 49-816 | 49-812 |
| WA-140-1 | K10-WAT | D10-WAT | 49-816 | 49-812 |
| WA-141-1 | K10-WAT | D10-WAT | 49-816 | 49-812 |
| WA-142-1 | K10-WAT | D10-WAT | 49-816 | 49-812 |
| WA-143-1 | K10-WAT | D10-WAT | 49-816 | 49-812 |
| WA-144-1 | K10-WAT | D10-WAT | 49-816 | 49-812 |
| WA-145-1 | K10-WAT | D10-WAT | 49-816 | 49-812 |
| WA-146-1 | K10-WAT | D10-WAT | 49-816 | 49-812 |
| WA-148-1 | K10-WAT | D10-WAT | 49-816 | 49-812 |
| WA-149-1 | K10-WAT | D10-WAT | 49-816 | 49-812 |
| WA-150-1 | K10-WAT | D10-WAT | 49-816 | 49-812 |
| WA-151-1 | K10-WAT | D10-WAT | 49-816 | 49-812 |
| WA-153-1 | K10-WAT | D10-WAT | 49-816 | 49-812 |
| WA-154-1 | K10-WAT | D10-WAT | 49-816 | 49-812 |
| WA-155-1 | K10-WAT | D10-WAT | 49-816 | 49-812 |
| WA-157-1 | K10-WAT | D10-WAT | 49-816 | 49-812 |
| WA-158-1 | K10-WAT | D10-WAT | 49-816 | 49-812 |
| WA-159-1 | K10-WAT | D10-WAT | 49-816 | 49-812 |
| WA-160-1 | K10-WAT | D10-WAT | 49-816 | 49-812 |
| WA-161-1 | K10-WAT | D10-WAT | 49-816 | 49-812 |
| WA-162-1 | K10-WAT | D10-WAT | 49-816 | 49-812 |
| WA-163-1 | K10-WAT | D10-WAT | 49-816 | 49-812 |
| WA-164-1 | K10-WAT | D10-WAT | 49-816 | 49-812 |
| WA-165-1 | K10-WAT | D10-WAT | 49-816 | 49-812 |
| WA-166-1 | K10-WAT | D10-WAT | 49-816 | 49-812 |
| WA-167-1 | K10-WAT | D10-WAT | 49-816 | 49-812 |
| WA-168-1 | K10-WAT | D10-WAT | 49-816 | 49-812 |
| WA-169-1 | K10-WAT | D10-WAT | 49-816 | 49-812 |
| WA-170-1 | K10-WAT | D10-WAT | 49-816 | 49-812 |
| WA-171-1 | K10-WAT | D10-WAT | 49-816 | 49-812 |
| WA-173-1 | K10-WAT | D10-WAT | 49-816 | 49-812 |
| WA-174-1 | K10-WAT | D10-WAT | 49-816 | 49-812 |
| WA-175-1 | K10-WAT | D10-WAT | 49-816 | 49-812 |
| WA-177-1 | K10-WAT | D10-WAT | 49-816 | 49-812 |
| WA-178-1 | K10-WAT | D10-WAT | 49-816 | 49-812 |
| WA-179-1 | K10-WAT | D10-WAT | 49-816 | 49-812 |
| WA-180-1 | K10-WAT | D10-WAT | 49-816 | 49-812 |
| WA-181-1 | K10-WAT | D10-WAT | 49-816 | 49-812 |
| WA-182-1 | K10-WAT | D10-WAT | 49-816 | 49-812 |
| WA-183-1 | K10-WAT | D10-WAT | 49-816 | 49-812 |
| WA-184-1 | K10-WAT | D10-WAT | 49-816 | 49-812 |
| WA-185 | K10WAT | D10WAT | 49-816 | 49-812 |
| WA-185-1 | K10-WAT | D10-WAT | 49-816 | 49-812 |
| WA-186-1 | K10-WAT | D10-WAT | 49-816 | 49-812 |

# Carburetor Kit Reference

| OEM CARBURETOR | | | OREGON | |
|---|---|---|---|---|
| Model | Kit | Gaskets | Kit | Gaskets |
| **Walbro** | | | | |
| WA-187-1 | K10-WAT | D10-WAT | 49-816 | 49-812 |
| WA-188-1 | K10-WAT | D10-WAT | 49-816 | 49-812 |
| WA-189-1 | K10-WAT | D10-WAT | 49-816 | 49-812 |
| WA-190-1 | K10-WAT | D10-WAT | 49-816 | 49-812 |
| WA-19-1 | K10-WAT | D10-WAT | 49-816 | 49-812 |
| WA-191-1 | K10-WAT | D10-WAT | 49-816 | 49-812 |
| WA-192-1 | K10-WAT | D10-WAT | 49-816 | 49-812 |
| WA-193-1 | K10-WAT | D10-WAT | 49-816 | 49-812 |
| WA-194-1 | K10-WAT | D10-WAT | 49-816 | 49-812 |
| WA-195-1 | K10-WAT | D10-WAT | 49-816 | 49-812 |
| WA-196-1 | K10-WAT | D10-WAT | 49-816 | 49-812 |
| WA-197-1 | K10-WAT | D10-WAT | 49-816 | 49-812 |
| WA-198-1 | K20-WAT | D20-WAT | 49-831 | 49-812 |
| WA-199-1 | K10-WAT | D10-WAT | 49-816 | 49-812 |
| WA-200-1 | K10-WAT | D10-WAT | 49-816 | 49-812 |
| WA-201-1 | K10-WAT | D10-WAT | 49-816 | 49-812 |
| WA-202-1 | K10-WAT | D10-WAT | 49-816 | 49-812 |
| WA-203-1 | K10-WAT | D10-WAT | 49-816 | 49-812 |
| WA-204-1 | K10-WAT | D10-WAT | 49-816 | 49-812 |
| WA-205-1 | K10-WAT | D10-WAT | 49-816 | 49-812 |
| WA-206-1 | K10-WAT | D10-WAT | 49-816 | 49-812 |
| WA-207-1 | K20-WAT | D20-WAT | 49-831 | 49-812 |
| WA-208-1 | K10-WAT | D10-WAT | 49-816 | 49-812 |
| WA-209-1 | K10-WAT | D10-WAT | 49-816 | 49-812 |
| WA-2-1 | K10-WAT | D10-WAT | 49-816 | 49-812 |
| WA-210-1 | K10-WAT | D10-WAT | 49-816 | 49-812 |
| WA-21-1 | K10-WAT | D10-WAT | 49-816 | 49-812 |
| WA-212-1 | K10-WAT | D10-WAT | 49-816 | 49-812 |
| WA-213-1 | K10-WAT | D10-WAT | 49-816 | 49-812 |
| WA-214-1 | K20-WAT | D20-WAT | 49-831 | 49-812 |
| WA-215-1 | K20-WAT | D20-WAT | 49-831 | 49-812 |
| WA-216-1 | K20-WAT | D20-WAT | 49-831 | 49-812 |
| WA-217-1 | K20-WAT | D20-WAT | 49-831 | 49-812 |
| WA-218-1 | K20-WAT | D20-WAT | 49-831 | 49-812 |
| WA-219-1 | K20-WAT | D20-WAT | 49-831 | 49-812 |
| WA-22-1 | K10-WAT | D10-WAT | 49-816 | 49-812 |
| WA-221-1 | K20-WAT | D20-WAT | 49-831 | 49-812 |
| WA-222-1 | K10-WAT | D10-WAT | 49-816 | 49-812 |
| WA-223-1 | K20-WAT | D20-WAT | 49-831 | 49-812 |
| WA-224-1 | K20-WAT | D20-WAT | 49-831 | 49-812 |
| WA-225-1 | K23-WAT | D23-WAT | | |
| WA-226-1 | K20-WAT | D20-WAT | 49-831 | 49-812 |
| WA-227-1 | K20-WAT | D20-WAT | 49-831 | 49-812 |
| WA-228-1 | K23-WAT | D23-WAT | | |
| WA-229-1 | K20-WAT | D20-WAT | 49-831 | 49-812 |
| WA-230-1 | K10-WAT | D10-WAT | 49-816 | 49-812 |
| WA-231-1 | K20-WAT | D20-WAT | 49-831 | 49-812 |
| WA-25-1 | K10-WAT | D10-WAT | 49-816 | 49-812 |
| WA-27-1 | K10-WAT | D10-WAT | 49-816 | 49-812 |
| WA-28-1 | K10-WAT | D10-WAT | 49-816 | 49-812 |
| WA-32-1 | K10-WAT | D10-WAT | 49-816 | 49-812 |
| WA-33-1 | K10-WAT | D10-WAT | 49-816 | 49-812 |
| WA-34-1 | K10-WAT | D10-WAT | 49-816 | 49-812 |
| WA-38-1 | K10-WAT | D10-WAT | 49-816 | 49-812 |
| WA-39-1 | K10-WAT | D10-WAT | 49-816 | 49-812 |
| WA-40-1 | K10-WAT | D10-WAT | 49-816 | 49-812 |
| WA-42-1 | K10-WAT | D10-WAT | 49-816 | 49-812 |
| WA-44-1 | K10-WAT | D10-WAT | 49-816 | 49-812 |
| WA-45-1 | K10-WAT | D10-WAT | 49-816 | 49-812 |
| WA-46-1 | K10-WAT | D10-WAT | 49-816 | 49-812 |
| WA-49-1 | K10-WAT | D10-WAT | 49-816 | 49-812 |
| WA-50-1 | K10-WAT | D10-WAT | 49-816 | 49-812 |
| WA-5-1 | K10-WAT | D10-WAT | 49-816 | 49-812 |
| WA-51-1 | K10-WAT | D10-WAT | 49-816 | 49-812 |
| WA-52-1 | K10-WAT | D10-WAT | 49-816 | 49-812 |
| WA-53-1 | K10-WAT | D10-WAT | 49-816 | 49-812 |
| WA-54-1 | K10-WAT | D10-WAT | 49-816 | 49-812 |
| WA-55-1 | K10-WAT | D10-WAT | 49-816 | 49-812 |
| WA-56-1 | K10-WAT | D10-WAT | 49-816 | 49-812 |
| WA-58-1 | K10-WAT | D10-WAT | 49-816 | 49-812 |
| WA-59-1 | K10-WAT | D10-WAT | 49-816 | 49-812 |
| WA-59R-1 | K10-WAT | D10-WAT | 49-816 | 49-812 |
| WA-62-1 | K10-WAT | D10-WAT | 49-816 | 49-812 |
| WA-63-1 | K10-WAT | D10-WAT | 49-816 | 49-812 |
| WA-64-1 | K10-WAT | D10-WAT | 49-816 | 49-812 |
| WA-65-1 | K10-WAT | D10-WAT | 49-816 | 49-812 |
| WA-66-1 | K10-WAT | D10-WAT | 49-816 | 49-812 |
| WA-68-1 | K10-WAT | D10-WAT | 49-816 | 49-812 |

| OEM CARBURETOR | | | OREGON | |
|---|---|---|---|---|
| Model | Kit | Gaskets | Kit | Gaskets |
| **Walbro** | | | | |
| WA-7-1 | K10-WAT | D10-WAT | 49-816 | 49-812 |
| WA-73-1 | K10-WAT | D10-WAT | 49-816 | 49-812 |
| WA-74-1 | K10-WAT | D10-WAT | 49-816 | 49-812 |
| WA-75-1 | K10-WAT | D10-WAT | 49-816 | 49-812 |
| WA-78-1 | K10-WAT | D10-WAT | 49-816 | 49-812 |
| WA-79-1 | K10-WAT | D10-WAT | 49-816 | 49-812 |
| WA-80-1 | K10-WAT | D10-WAT | 49-816 | 49-812 |
| WA-8-1 | K10-WAT | D10-WAT | 49-816 | |
| WA-81-1 | K10-WAT | D10-WAT | 49-816 | 49-812 |
| WA-82-1 | K10-WAT | D10-WAT | 49-816 | 49-812 |
| WA-83-1 | K10-WAT | D10-WAT | 49-816 | 49-812 |
| WA-84-1 | K10-WAT | D10-WAT | 49-816 | 49-812 |
| WA-85-1 | K10-WAT | D10-WAT | 49-816 | 49-812 |
| WA-86-1 | K10-WAT | D10-WAT | 49-816 | 49-812 |
| WA-87-1 | K10-WAT | D10-WAT | 49-816 | 49-812 |
| WA-89-1 | K10-WAT | D10-WAT | 49-816 | 49-812 |
| WA-90-1 | K10-WAT | D10-WAT | 49-816 | 49-812 |
| WA-91-1 | K10-WAT | D10-WAT | 49-816 | 49-812 |
| WA-92-1 | K10-WAT | D10-WAT | 49-816 | 49-812 |
| WA-93-1 | K10-WAT | D10-WAT | 49-816 | 49-812 |
| WA-94-1 | K10-WAT | D10-WAT | 49-816 | 49-812 |
| WA-95-1 | K10-WAT | D10-WAT | 49-816 | 49-812 |
| WA-96-1 | K10-WAT | D10-WAT | 49-816 | 49-812 |
| WA-97-1 | K10-WAT | D10-WAT | 49-816 | 49-812 |
| WA-98-1 | K10-WAT | D10-WAT | 49-816 | 49-812 |
| WA-99-1 | K10-WAT | D10-WAT | 49-816 | 49-812 |
| WB-10-1 | K10-WB | D10-WB | 49-872 | |
| WB-11-1 | K10-WB | D10-WB | 49-872 | |
| WB-12-1 | K10-WB | D10-WB | 49-872 | |
| WB-13-1 | K10-WB | D10-WB | 49-872 | |
| WB-17-1 | K10-WB | D10-WB | 49-872 | |
| WB-18-1 | K10-WB | D10-WB | 49-872 | |
| WB-19-1 | K10-WB | D10-WB | 49-872 | |
| WB-20-1 | K10-WB | D10-WB | 49-872 | |
| WB-2-1 | K10-WB | D10-WB | 49-872 | |
| WB-21-1 | K10-WB | D10-WB | 49-872 | |
| WB-24-1 | K11-WB | D11-WB | | |
| WB-25-1 | K11-WB | D11-WB | | |
| WB-26-1 | K10-WB | D10-WB | 49-872 | |
| WB-27-1 | K10-WB | D10-WB | 49-872 | |
| WB-28-1 | K10-WB | D10-WB | 49-872 | |
| WB-29-1 | K10-WB | D10-WB | 49-872 | |
| WB-30-1 | K10-WB | D10-WB | 49-872 | |
| WB-3-1 | K13-WB | D13-WB | | |
| WB-31-1 | K10-WB | D10-WB | 49-872 | |
| WB-32-1 | K11-WB | D11-WB | | |
| WB-33-1 | K12-WB | D12-WB | | |
| WB-34-1 | K10-WB | D10-WB | 49-872 | |
| WB-35-1 | K12-WB | D12-WB | | |
| WB-36-1 | K10-WB | D10-WB | 49-872 | |
| WB-37-1 | K10-WB | D10-WB | 49-872 | |
| WB-39-1 | K10-WB | D10-WB | 49-872 | |
| WB-40-1 | K10-WB | D10-WB | 49-872 | |
| WB-4-1 | K10-WB | D10-WB | 49-872 | |
| WB-41-1 | K10-WB | D10-WB | 49-872 | |
| WB-42-1 | K10-WB | D10-WB | 49-872 | |
| WB-44-1 | K10-WB | D10-WB | 49-872 | |
| WB-45-1 | K10-WB | D10-WB | 49-872 | |
| WB-46-1 | K10-WB | D10-WB | 49-872 | |
| WB-6-1 | K10-WB | D10-WB | 49-872 | |
| WB-8-1 | K10-WB | D10-WB | 49-872 | |
| WJ-100-1 | K10-WJ | D10-WJ | 49-873 | 49-843 |
| WJ-10-1 | K10-WJ | D10-WJ | 49-873 | 49-843 |
| WJ-101-1 | K15-WJ | D10-WJ | | 49-843 |
| WJ-104-1 | K10-WJ | D10-WJ | 49-873 | 49-843 |
| WJ-105-1 | K10-WJ | D10-WJ | 49-873 | 49-843 |
| WJ-106-1 | K15-WJ | D10-WJ | | 49-843 |
| WJ-109-1 | K15-WJ | D10-WJ | | 49-843 |
| WJ-1-1 | K10-WJ | D10-WJ | 49-873 | 49-843 |
| WJ-110-1 | K15-WJ | D10-WJ | | 49-843 |
| WJ-11-1 | K10-WJ | D10-WJ | 49-873 | 49-843 |
| WJ-111-1 | K10-WJ | D10-WJ | 49-873 | 49-843 |
| WJ-115-1 | K15-WJ | D10-WJ | | 49-843 |
| WJ-116-1 | K15-WJ | D10-WJ | | 49-843 |
| WJ-117-1 | K15-WJ | D10-WJ | | 49-843 |
| WJ-118-1 | K15-WJ | D10-WJ | | 49-843 |
| WJ-119-1 | K15-WJ | D10-WJ | | 49-843 |
| WJ-12-1 | K10-WJ | D10-WJ | 49-873 | 49-843 |

| OEM CARBURETOR | | | OREGON | |
|---|---|---|---|---|
| Model | Kit | Gaskets | Kit | Gaskets |
| **Walbro** | | | | |
| WJ-121-1 | K15-WJ | D10-WJ | | 49-843 |
| WJ-122-1 | K15-WJ | D10-WJ | | 49-843 |
| WJ-123-1 | K15-WJ | D10-WJ | | 49-843 |
| WJ-124-1 | K15-WJ | | | 49-843 |
| WJ-126-1 | K10-WJ | D10-WJ | 49-873 | 49-843 |
| WJ-13-1 | K10-WJ | D10-WJ | 49-873 | 49-843 |
| WJ-15-1 | K10-WJ | D10-WJ | 49-873 | 49-843 |
| WJ-16-1 | K10-WJ | D10-WJ | 49-873 | 49-843 |
| WJ-17-1 | K10-WJ | D10-WJ | 49-873 | 49-843 |
| WJ-18-1 | K10-WJ | D10-WJ | 49-873 | 49-843 |
| WJ-19-1 | K10-WJ | D10-WJ | 49-873 | 49-843 |
| WJ-20-1 | K10-WJ | D10-WJ | 49-873 | 49-843 |
| WJ-2-1 | K10-WJ | D10-WJ | 49-873 | 49-843 |
| WJ-21-1 | K10-WJ | D10-WJ | 49-873 | 49-843 |
| WJ-22-1 | K10-WJ | D10-WJ | 49-873 | 49-843 |
| WJ-23-1 | K10-WJ | D10-WJ | 49-873 | 49-843 |
| WJ-24-1 | K10-WJ | D10-WJ | 49-873 | 49-843 |
| WJ-25-1 | K10-WJ | D10-WJ | 49-873 | 49-843 |
| WJ-26-1 | K10-WJ | D10-WJ | 49-873 | 49-843 |
| WJ-27-1 | K10-WJ | D10-WJ | 49-873 | 49-843 |
| WJ-28-1 | K10-WJ | D10-WJ | 49-873 | 49-843 |
| WJ-29-1 | K10-WJ | D10-WJ | 49-873 | 49-843 |
| WJ-30-1 | K10-WJ | D10-WJ | 49-873 | 49-843 |
| WJ-3-1 | K10-WJ | D10-WJ | 49-873 | 49-843 |
| WJ-31-1 | K10-WJ | D10-WJ | 49-873 | 49-843 |
| WJ-32-1 | K10-WJ | D10-WJ | 49-873 | 49-843 |
| WJ-33-1 | K10-WJ | D10-WJ | 49-873 | 49-843 |
| WJ-34-1 | K10-WJ | D10-WJ | 49-873 | 49-843 |
| WJ-35-1 | K10-WJ | D10-WJ | 49-873 | 49-843 |
| WJ-36-1 | K10-WJ | D10-WJ | 49-873 | 49-843 |
| WJ-37-1 | K10-WJ | D10-WJ | 49-873 | 49-843 |
| WJ-38-1 | K10-WJ | D10-WJ | 49-873 | 49-843 |
| WJ-39-1 | K10-WJ | D10-WJ | 49-873 | 49-843 |
| WJ-40-1 | K10-WJ | D10-WJ | 49-873 | 49-843 |
| WJ-4-1 | K10-WJ | D10-WJ | 49-873 | 49-843 |
| WJ-41-1 | K10-WJ | D10-WJ | 49-873 | 49-843 |
| WJ-42 | K10-WJ | D10-WJ | 49-873 | 49-843 |
| WJ-44-1 | K15-WJ | D10-WJ | | 49-843 |
| WJ-45-1 | K10-WJ | D10-WJ | 49-873 | 49-843 |
| WJ-46-1 | K10-WJ | D10-WJ | 49-873 | 49-843 |
| WJ-47-1 | K10-WJ | D10-WJ | 49-873 | 49-843 |
| WJ-48-1 | K10-WJ | D10-WJ | 49-873 | 49-843 |
| WJ-49-1 | K10-WJ | D10-WJ | 49-873 | 49-843 |
| WJ-50-1 | K10-WJ | D10-WJ | 49-873 | 49-843 |
| WJ-5-1 | K10-WJ | D10-WJ | 49-873 | 49-843 |
| WJ-52 | K10-WJ | D10-WJ | 49-873 | 49-843 |
| WJ-54-1 | K10-WJ | D10-WJ | 49-873 | 49-843 |
| WJ-55-1 | K10-WJ | D10-WJ | 49-873 | 49-843 |
| WJ-56-1 | K10-WJ | D10-WJ | 49-873 | 49-843 |
| WJ-57-1 | K10-WJ | D10-WJ | 49-873 | 49-843 |
| WJ-58-1 | K10-WJ | D10-WJ | 49-873 | 49-843 |
| WJ-59-1 | K10-WJ | D10-WJ | 49-873 | 49-843 |
| WJ-60-1 | K10-WJ | D10-WJ | 49-873 | 49-843 |
| WJ-6-1 | K10-WJ | D10-WJ | 49-873 | 49-843 |
| WJ-61-1 | K10-WJ | D10-WJ | 49-873 | 49-843 |
| WJ-63-1 | K15-WJ | D10-WJ | | 49-843 |
| WJ-64-1 | K10-WJ | D10-WJ | 49-873 | 49-843 |
| WJ-68-1 | K10-WJ | D10-WJ | 49-873 | 49-843 |
| WJ-69 | K10-WJ | D10-WJ | 49-873 | 49-843 |
| WJ-70-1 | K10-WJ | D10-WJ | 49-873 | 49-843 |
| WJ-7-1 | K10-WJ | D10-WJ | 49-873 | 49-843 |
| WJ-71-1 | K10-WJ | D10-WJ | 49-873 | 49-843 |
| WJ-72-1 | K15-WJ | D10-WJ | | 49-843 |
| WJ-73-1 | K15-WJ | D10-WJ | | 49-843 |
| WJ-74-1 | K15-WJ | D10-WJ | | 49-843 |
| WJ-75-1 | K15-WJ | D10-WJ | | 49-843 |
| WJ-77-1 | K10-WJ | D10-WJ | 49-873 | 49-843 |
| WJ-78-1 | K10-WJ | D10-WJ | 49-873 | 49-843 |
| WJ-79-1 | K10-WJ | D10-WJ | 49-873 | 49-843 |
| WJ-80-1 | K10-WJ | D10-WJ | 49-873 | 49-843 |
| WJ-8-1 | K10-WJ | D10-WJ | 49-873 | 49-843 |
| WJ-81-1 | K10-WJ | D10-WJ | 49-873 | 49-843 |
| WJ-82-1 | K10-WJ | D10-WJ | 49-873 | 49-843 |
| WJ-83-1 | K15-WJ | D10-WJ | | 49-843 |
| WJ-84-1 | K10-WJ | D10-WJ | 49-873 | 49-843 |
| WJ-85-1 | K15-WJ | D10-WJ | | 49-843 |
| WJ-87-1 | K10-WJ | D10-WJ | 49-873 | 49-843 |
| WJ-89-1 | K10-WJ | D13-WJ | 49-873 | 49-843 |

C

| OEM CARBURETOR | | | OREGON | |
|---|---|---|---|---|
| Model | Kit | Gaskets | Kit | Gaskets |
| **Walbro** | | | | |
| WJ-90-1 | K10-WJ | D10-WJ | 49-873 | 49-843 |
| WJ-9-1 | K10-WJ | D10-WJ | 49-873 | 49-843 |
| WJ-95-1 | K10-WJ | D10-WJ | 49-873 | 49-843 |
| WJ-96-1 | K10-WJ | D10-WJ | 49-873 | 49-843 |
| WJ-97-1 | K10-WJ | D10-WJ | 49-873 | 49-843 |
| WJ-98-1 | K10-WJ | D10-WJ | 49-873 | 49-843 |
| WJ-99-1 | K10-WJ | D10-WJ | 49-873 | 49-843 |
| WS-10-1 | K10-WS | D10-WS | | 49-814 |
| WS-1-1 | K10-WS | D10-WS | | 49-814 |
| WS-11-1 | K10-WS | D10-WS | | 49-814 |
| WS-13-1 | K10-WS | D10-WS | | 49-814 |
| WS-14-1 | K10-WS | D10-WS | | 49-814 |
| WS-17-1 | K10-WS | D10-WS | | 49-814 |
| WS-18-1 | K10-WS | D10-WS | | 49-814 |
| WS-21-1 | K10-WS | D10-WS | | 49-814 |
| WS-22-1 | K10-WS | D10-WS | | 49-814 |
| WS-24-1 | K10-WS | D10-WS | | 49-814 |
| WS-25-1 | K10-WS | D10-WS | | 49-814 |
| WS-26-1 | K10-WS | D10-WS | | 49-814 |
| WS-3-1 | K10-WS | D10-WS | | 49-814 |
| WT-100-1 | K22-WAT | D22-WAT | | |
| WT-1008-1 | K27-WAT | | | |
| WT-1009-1 | K27-WAT | | | |
| WT-10-1 | K10-WAT | D10-WAT | 49-816 | 49-812 |
| WT-101-1 | K10-WAT | D10-WAT | 49-816 | 49-812 |
| WT-1011-1 | K27-WAT | | | |
| WT-1012-1 | K27-WAT | | | |
| WT-1014-1 | K27-WAT | | | |
| WT-1015-1 | K27-WAT | | | |
| WT-1016-1 | K27-WAT | | | |
| WT-1017-1 | K27-WAT | | | |
| WT-1018-1 | K27-WAT | | | |
| WT-1019-1 | K27-WAT | | | |
| WT-1020-1 | K27-WAT | | | |
| WT-102-1 | K10-WAT | D10-WAT | 49-816 | 49-812 |
| WT-1026-1 | K27-WAT | | | |
| WT-1028-1 | K27-WAT | | | |
| WT-1030-1 | K27-WAT | | | |
| WT-103-1 | K10-WAT | D10-WAT | 49-816 | 49-812 |
| WT-1031-1 | K27-WAT | | | |
| WT-1036-1 | K20-WAT | | 49-831 | |
| WT-1037-1 | K27-WAT | | | |
| WT-1039-1 | K27-WAT | | | |
| WT-104-1 | K10-WAT | D10-WAT | 49-816 | 49-812 |
| WT-1041-1 | K27-WAT | | | |
| WT-1042-1 | K27-WAT | | | |
| WT-1046-1 | K27-WAT | | | |
| WT-105-1 | K10-WAT | D10-WAT | 49-816 | 49-812 |
| WT-106-1 | K10-WAT | D10-WAT | 49-816 | 49-812 |
| WT-107-1 | K10-WAT | D10-WAT | 49-816 | 49-812 |
| WT-108-1 | K20-WAT | D10-WAT | 49-831 | 49-812 |
| WT-109-1 | K20-WAT | D10-WAT | 49-831 | 49-812 |
| WT-1-1 | K10-WAT | D10-WAT | 49-816 | 49-812 |
| WT-11-1 | K10-WAT | D10-WAT | 49-816 | 49-812 |
| WT-111-1 | K10-WAT | D10-WAT | 49-816 | 49-812 |
| WT-112-1 | K10-WAT | D10-WAT | 49-816 | 49-812 |
| WT-113-1 | K10-WAT | D10-WAT | 49-816 | 49-812 |
| WT-114-1 | K10-WAT | D10-WAT | 49-816 | 49-812 |
| WT-115-1 | K10-WAT | D10-WAT | 49-816 | 49-812 |
| WT-116-1 | K20-WAT | D10-WAT | 49-831 | 49-812 |
| WT-117-1 | K20-WAT | D10-WAT | 49-831 | 49-812 |
| WT-118-1 | K20-WAT | D10-WAT | 49-831 | 49-812 |
| WT-119-1 | K20-WAT | D10-WAT | 49-831 | 49-812 |
| WT-120-1 | K10-WAT | D10-WAT | 49-816 | 49-812 |
| WT-12-1 | K10-WAT | D10-WAT | 49-816 | 49-812 |
| WT-123-1 | K10-WAT | D10-WAT | 49-816 | 49-812 |
| WT-124-1 | K10-WAT | D10-WAT | 49-816 | 49-812 |
| WT-125-1 | K20-WAT | D10-WAT | 49-831 | 49-812 |
| WT-126-1 | K20-WAT | D10-WAT | 49-831 | 49-812 |
| WT-127-1 | K20-WAT | D10-WAT | 49-831 | 49-812 |
| WT-130-1 | K10-WAT | D10-WAT | 49-816 | 49-812 |
| WT-13-1 | K20-WAT | D10-WAT | 49-831 | 49-812 |
| WT-131-1 | K10-WAT | D10-WAT | 49-816 | 49-812 |
| WT-132-1 | K20-WAT | D20-WAT | 49-831 | 49-812 |
| WT-133-1 | K10-WAT | D10-WAT | 49-816 | 49-812 |
| WT-134-1 | K10-WAT | D10-WAT | 49-816 | 49-812 |
| WT-137-1 | K10-WAT | D10-WAT | 49-816 | 49-812 |
| WT-138-1 | K10-WAT | D10-WAT | 49-816 | 49-812 |

| OEM CARBURETOR | | | OREGON | |
|---|---|---|---|---|
| Model | Kit | Gaskets | Kit | Gaskets |
| **Walbro** | | | | |
| WT-139-1 | K10-WAT | D10-WAT | 49-816 | 49-812 |
| WT-140-1 | K10-WAT | D10-WAT | 49-816 | 49-812 |
| WT-14-1 | K20-WAT | D10-WAT | 49-831 | 49-812 |
| WT-141-1 | K10-WAT | D10-WAT | 49-816 | 49-812 |
| WT-142-1 | K10-WAT | D10-WAT | 49-816 | 49-812 |
| WT-143-1 | K10-WAT | D10-WAT | 49-816 | 49-812 |
| WT-144-1 | K10-WAT | D10-WAT | 49-816 | 49-812 |
| WT-145-1 | K10-WAT | D10-WAT | 49-816 | 49-812 |
| WT-146-1 | K10-WAT | D10-WAT | 49-816 | 49-812 |
| WT-147-1 | K10-WAT | D10-WAT | 49-816 | 49-812 |
| WT-148-1 | K10-WAT | D10-WAT | 49-816 | 49-812 |
| WT-149-1 | K10-WAT | D10-WAT | 49-816 | 49-812 |
| WT-150-1 | K20-WAT | D10-WAT | 49-831 | 49-812 |
| WT-15-1 | K10-WAT | D10-WAT | 49-816 | 49-812 |
| WT-151-1 | K20-WAT | D20-WAT | 49-831 | 49-812 |
| WT-152-1 | K10-WAT | D10-WAT | 49-816 | 49-812 |
| WT-153-1 | K10-WAT | D10-WAT | 49-816 | 49-812 |
| WT-156-1 | K20-WAT | D10-WAT | 49-831 | 49-812 |
| WT-157-1 | K10-WAT | D10-WAT | 49-816 | 49-812 |
| WT-158-1 | K10-WAT | D10-WAT | 49-816 | 49-812 |
| WT-159-1 | K10-WAT | D10-WAT | 49-816 | 49-812 |
| WT-160-1 | K20-WAT | D20-WAT | 49-831 | 49-812 |
| WT-16-1 | K10-WAT | D10-WAT | 49-816 | 49-812 |
| WT-161-1 | K10-WAT | D10-WAT | 49-816 | 49-812 |
| WT-162-1 | K20-WAT | D10-WAT | 49-831 | 49-812 |
| WT-163-1 | K20-WAT | D20-WAT | 49-831 | 49-812 |
| WT-165-1 | K20-WAT | D10-WAT | 49-831 | 49-812 |
| WT-166-1 | K10-WAT | D10-WAT | 49-816 | 49-812 |
| WT-167-1 | K10-WAT | D10-WAT | 49-816 | 49-812 |
| WT-168-1 | K10-WAT | D10-WAT | 49-816 | 49-812 |
| WT-169-1 | K20-WAT | D10-WAT | 49-831 | 49-812 |
| WT-170-1 | K20-WAT | D10-WAT | 49-831 | 49-812 |
| WT-17-1 | K20-WAT | D10-WAT | 49-831 | 49-812 |
| WT-171-1 | K20-WAT | D10-WAT | 49-831 | 49-812 |
| WT-172-1 | K20-WAT | D10-WAT | 49-831 | 49-812 |
| WT-173-1 | K20-WAT | D10-WAT | 49-831 | 49-812 |
| WT-174-1 | K20-WAT | D10-WAT | 49-831 | 49-812 |
| WT-175-1 | K10-WAT | D10-WAT | 49-816 | 49-812 |
| WT-176-1 | K10-WAT | D10-WAT | 49-816 | 49-812 |
| WT-178-1 | K10-WAT | D10-WAT | 49-816 | 49-812 |
| WT-179-1 | K20-WAT | D10-WAT | 49-831 | 49-812 |
| WT-180-1 | K10-WAT | D10-WAT | 49-816 | 49-812 |
| WT-18-1 | K10-WAT | D10-WAT | 49-816 | 49-812 |
| WT-181-1 | K10-WAT | D10-WAT | 49-816 | 49-812 |
| WT-182-1 | K10-WAT | D10-WAT | 49-816 | 49-812 |
| WT-183-1 | K20-WAT | D10-WAT | 49-831 | 49-812 |
| WT-184-1 | K10-WAT | D10-WAT | 49-816 | 49-812 |
| WT-185-1 | K20-WAT | D10-WAT | 49-831 | 49-812 |
| WT-186-1 | K10-WAT | D10-WAT | 49-816 | 49-812 |
| WT-187-1 | K10-WAT | D10-WAT | 49-816 | 49-812 |
| WT-188-1 | K10-WAT | D10-WAT | 49-816 | 49-812 |
| WT-189-1 | K20-WAT | D10-WAT | 49-831 | 49-812 |
| WT-190-1 | K10-WAT | D10-WAT | 49-816 | 49-812 |
| WT-19-1 | K20-WAT | D10-WAT | 49-831 | 49-812 |
| WT-191-1 | K20-WAT | D10-WAT | 49-831 | 49-812 |
| WT-192-1 | K20-WAT | D10-WAT | 49-831 | 49-812 |
| WT-194-1 | K20-WAT | D10-WAT | 49-831 | 49-812 |
| WT-195A | K10-WAT | D10-WAT | 49-816 | 49-812 |
| WT-196-1 | K20-WAT | D20-WAT | 49-831 | 49-812 |
| WT-198-1 | K10-WAT | D10-WAT | 49-816 | 49-812 |
| WT-199-1 | K10-WAT | D10-WAT | 49-816 | 49-812 |
| WT-20-1 | K10-WAT | D10-WAT | 49-816 | 49-812 |
| WT-201-1 | K20-WAT | D20-WAT | 49-831 | 49-812 |
| WT-202-1 | K20-WAT | D10-WAT | 49-831 | 49-812 |
| WT-204-1 | K10-WAT | D10-WAT | 49-816 | 49-812 |
| WT-205-1 | K10-WAT | D10-WAT | 49-816 | 49-812 |
| WT-206-1 | K10-WAT | D10-WAT | 49-816 | 49-812 |
| WT-207-1 | K20-WAT | D20-WAT | 49-831 | 49-812 |
| WT-208-1 | K20-WAT | D10-WAT | 49-831 | 49-812 |
| WT-209-1 | K20-WAT | D10-WAT | 49-831 | 49-812 |
| WT-2-1 | K10-WAT | D10-WAT | 49-816 | 49-812 |
| WT-210-1 | K10-WAT | D10-WAT | 49-816 | 49-812 |
| WT-21-1 | K10-WAT | D10-WAT | 49-816 | 49-812 |
| WT-211-1 | K20-WAT | D20-WAT | 49-831 | 49-812 |
| WT-212-1 | K20-WAT | D10-WAT | 49-831 | 49-812 |
| WT-213-1 | K10-WAT | D10-WAT | 49-816 | 49-812 |
| WT-214-1 | K10-WAT | D10-WAT | 49-816 | 49-812 |
| WT-215-1 | K20-WAT | D10-WAT | 49-831 | 49-812 |

| OEM CARBURETOR | | | OREGON | |
|---|---|---|---|---|
| Model | Kit | Gaskets | Kit | Gaskets |
| **Walbro** | | | | |
| WT-216-1 | K10-WAT | D10-WAT | 49-816 | 49-812 |
| WT-217-1 | K10-WAT | D10-WAT | 49-816 | 49-812 |
| WT-218-1 | K20-WAT | D10-WAT | 49-831 | 49-812 |
| WT-219-1 | K10-WAT | D10-WAT | 49-816 | 49-812 |
| WT-220-1 | K10-WAT | D10-WAT | 49-816 | 49-812 |
| WT-22-1 | K10-WAT | D10-WAT | 49-816 | 49-812 |
| WT-221-1 | K20-WAT | D10-WAT | 49-831 | 49-812 |
| WT-223-1 | K20-WAT | D10-WAT | 49-831 | 49-812 |
| WT-224-1 | K20-WAT | D10-WAT | 49-831 | 49-812 |
| WT-225-1 | K20-WAT | D10-WAT | 49-831 | 49-812 |
| WT-226-1 | K10-WAT | D10-WAT | 49-816 | 49-812 |
| WT-227-1 | K10-WAT | D10-WAT | 49-816 | 49-812 |
| WT-228-1 | K20-WAT | D10-WAT | 49-831 | 49-812 |
| WT-229-1 | K20-WAT | D10-WAT | 49-831 | 49-812 |
| WT-230-1 | K10-WAT | D10-WAT | 49-816 | 49-812 |
| WT-231-1 | K10-WAT | D10-WAT | 49-816 | 49-812 |
| WT-232-1 | K10-WAT | D10-WAT | 49-816 | 49-812 |
| WT-233-1 | K10-WAT | D10-WAT | 49-816 | 49-812 |
| WT-234-1 | K20-WAT | D10-WAT | 49-831 | 49-812 |
| WT-235-1 | K10-WAT | D10-WAT | 49-816 | 49-812 |
| WT-236-1 | K10-WAT | D10-WAT | 49-816 | 49-812 |
| WT-237-1 | K10-WAT | D10-WAT | 49-816 | 49-812 |
| WT-238-1 | K20-WAT | D20-WAT | 49-831 | 49-812 |
| WT-239-1 | K20-WAT | D10-WAT | 49-831 | 49-812 |
| WT-24-1 | K10-WAT | D10-WAT | 49-816 | 49-812 |
| WT-241-1 | K20-WAT | D20-WAT | 49-831 | 49-812 |
| WT-242-1 | K10-WAT | D10-WAT | 49-816 | 49-812 |
| WT-243-1 | K10-WAT | D10-WAT | 49-816 | 49-812 |
| WT-244-1 | K10-WAT | D10-WAT | 49-816 | 49-812 |
| WT-245-1 | K20-WAT | D10-WAT | 49-831 | 49-812 |
| WT-246-1 | K20-WAT | D10-WAT | 49-831 | 49-812 |
| WT-247-1 | K10-WAT | D10-WAT | 49-816 | 49-812 |
| WT-248-1 | K10-WAT | D10-WAT | 49-816 | 49-812 |
| WT-249-1 | K20-WAT | D10-WAT | 49-831 | 49-812 |
| WT-250-1 | K10-WAT | D10-WAT | 49-816 | 49-812 |
| WT-25-1 | K10-WAT | D10-WAT | 49-816 | 49-812 |
| WT-251-1 | K10-WAT | D10-WAT | 49-816 | 49-812 |
| WT-252-1 | K10-WAT | D10-WAT | 49-816 | 49-812 |
| WT-253-1 | K10-WAT | D10-WAT | 49-816 | 49-812 |
| WT-254-1 | K10-WAT | D10-WAT | 49-816 | 49-812 |
| WT-255-1 | K10-WAT | D10-WAT | 49-816 | 49-812 |
| WT-257-1 | K10-WAT | D10-WAT | 49-816 | 49-812 |
| WT-258-1 | K10-WAT | D10-WAT | 49-816 | 49-812 |
| WT-259-1 | K10-WAT | D10-WAT | 49-816 | 49-812 |
| WT-260-1 | K20-WAT | D10-WAT | 49-831 | 49-812 |
| WT-26-1 | K10-WAT | D10-WAT | 49-816 | 49-812 |
| WT-261-1 | K10-WAT | D10-WAT | 49-816 | 49-812 |
| WT-262-1 | K10-WAT | D10-WAT | 49-816 | 49-812 |
| WT-264-1 | K10-WAT | D10-WAT | 49-816 | 49-812 |
| WT-265-1 | K10-WAT | D10-WAT | 49-816 | 49-812 |
| WT-266-1 | K10-WAT | D10-WAT | 49-816 | 49-812 |
| WT-267-1 | K10-WAT | D10-WAT | 49-816 | 49-812 |
| WT-270-1 | K10-WAT | D10-WAT | 49-816 | 49-812 |
| WT-271-1 | K10-WAT | D10-WAT | 49-816 | 49-812 |
| WT-272-1 | K10-WAT | D10-WAT | 49-816 | 49-812 |
| WT-273-1 | K20-WAT | D20-WAT | 49-831 | 49-812 |
| WT-274-1 | K24-WAT | D22-WAT | | |
| WT-275-1 | K10-WAT | D10-WAT | 49-816 | 49-812 |
| WT-276-1 | K10-WAT | D10-WAT | 49-816 | 49-812 |
| WT-277-1 | K10-WAT | D10-WAT | 49-816 | 49-812 |
| WT-278-1 | K10-WAT | D10-WAT | 49-816 | 49-812 |
| WT-279-1 | K10-WAT | D10-WAT | 49-816 | 49-812 |
| WT-280-1 | K10-WAT | D10-WAT | 49-816 | 49-812 |
| WT-281-1 | K20-WAT | D10-WAT | 49-831 | 49-812 |
| WT-282-1 | K20-WAT | D10-WAT | 49-831 | 49-812 |
| WT-283-1 | K20-WAT | D10-WAT | 49-831 | 49-812 |
| WT-284-1 | K10-WAT | D10-WAT | 49-816 | 49-812 |
| WT-285-1 | K10-WAT | D10-WAT | 49-816 | 49-812 |
| WT-286-1 | K20-WAT | D10-WAT | 49-831 | 49-812 |
| WT-287-1 | K10-WAT | D10-WAT | 49-816 | 49-812 |
| WT-288-1 | K10-WAT | D10-WAT | 49-816 | 49-812 |
| WT-289-1 | K20-WAT | D10-WAT | 49-831 | 49-812 |
| WT-290-1 | K20-WAT | D10-WAT | 49-831 | 49-812 |
| WT-29-1 | K10-WAT | D10-WAT | 49-816 | 49-812 |
| WT-291-1 | K20-WAT | D10-WAT | 49-831 | 49-812 |
| WT-292-1 | K10-WAT | D10-WAT | 49-816 | 49-812 |
| WT-294-1 | K22-WAT | D22-WAT | | |
| WT-295-1 | K22-WAT | D22-WAT | | |

# Carburetor Kit Reference

| OEM CARBURETOR | | | OREGON | |
|---|---|---|---|---|
| Model | Kit | Gaskets | Kit | Gaskets |
| **Walbro** | | | | |
| WT-296-1 | K20-WAT | D20-WAT | 49-831 | 49-844 |
| WT-297-1 | K22-WAT | D22-WAT | | |
| WT-298-1 | K10-WAT | D10-WAT | 49-816 | 49-812 |
| WT-299-1 | K20-WAT | D10-WAT | 49-831 | 49-812 |
| WT-300-1 | K10-WAT | D10-WAT | 49-816 | 49-812 |
| WT-301-1 | K10-WAT | D10-WAT | 49-816 | 49-812 |
| WT-302-1 | K10-WAT | D10-WAT | 49-816 | 49-812 |
| WT-303-1 | K20-WAT | D20-WAT | 49-831 | 49-812 |
| WT-305-1 | K20-WAT | D20-WAT | 49-831 | 49-812 |
| WT-306-1 | K20-WAT | D10-WAT | 49-831 | 49-812 |
| WT-307-1 | K10-WAT | D10-WAT | 49-816 | 49-812 |
| WT-308-1 | K20-WAT | D20-WAT | 49-831 | 49-812 |
| WT-309-1 | K10-WAT | D10-WAT | 49-816 | 49-812 |
| WT-3-1 | K10-WAT | D10-WAT | 49-816 | 49-812 |
| WT-310-1 | K10-WAT | D10-WAT | 49-816 | 49-812 |
| WT-311-1 | K10-WAT | D10-WAT | 49-816 | 49-812 |
| WT-312-1 | K10-WAT | D10-WAT | 49-816 | 49-812 |
| WT-313-1 | K20-WAT | D10-WAT | 49-831 | 49-812 |
| WT-314-1 | K22-WAT | D22-WAT | | |
| WT-315-1 | K20-WAT | D20-WAT | 49-831 | 49-812 |
| WT-317-1 | K10-WAT | D10-WAT | 49-816 | 49-812 |
| WT-318-1 | K10-WAT | D10-WAT | 49-816 | 49-812 |
| WT-321-1 | K10-WAT | D10-WAT | 49-816 | 49-812 |
| WT-322-1 | K10-WAT | D10-WAT | 49-816 | 49-812 |
| WT-323-1 | K10-WAT | D10-WAT | 49-816 | 49-812 |
| WT-324-1 | K10-WAT | D10-WAT | 49-816 | 49-812 |
| WT-325-1 | K20-WAT | D10-WAT | 49-831 | 49-812 |
| WT-326-1 | K10-WAT | D10-WAT | 49-816 | 49-812 |
| WT-327-1 | K20-WAT | D10-WAT | 49-831 | 49-812 |
| WT-329-1 | K10-WAT | D10-WAT | 49-816 | 49-812 |
| WT-330-1 | K10-WAT | D10-WAT | 49-816 | 49-812 |
| WT-33-1 | K10-WAT | D10-WAT | 49-816 | 49-812 |
| WT-331-1 | K10-WAT | D10-WAT | 49-816 | 49-812 |
| WT-332-1 | K10-WAT | D10-WAT | 49-816 | 49-812 |
| WT-333-1 | K20-WAT | D20-WAT | 49-831 | 49-812 |
| WT-334-1 | K20-WAT | D10-WAT | 49-831 | 49-812 |
| WT-336-1 | K20-WAT | D10-WAT | 49-831 | 49-812 |
| WT-337-1 | K10-WAT | D10-WAT | 49-816 | 49-812 |
| WT-338-1 | K20-WAT | D10-WAT | 49-831 | 49-812 |
| WT-339-1 | K10-WAT | D10-WAT | 49-816 | 49-812 |
| WT-340-1 | K10-WAT | D10-WAT | 49-816 | 49-812 |
| WT-34-1 | K20-WAT | D10-WAT | 49-831 | 49-812 |
| WT-341-1 | K10-WAT | D10-WAT | 49-816 | 49-812 |
| WT-344-1 | K22-WAT | D22-WAT | | |
| WT-345-1 | K10-WAT | D10-WAT | 49-816 | 49-812 |
| WT-346-1 | K20-WAT | D11-WAT | 49-831 | 49-812 |
| WT-347-1 | K10-WAT | D10-WAT | 49-816 | 49-812 |
| WT-348-1 | K10-WAT | D10-WAT | 49-816 | 49-812 |
| WT-349-1 | K10-WAT | D10-WAT | 49-816 | 49-812 |
| WT-350-1 | K20-WAT | D10-WAT | 49-831 | 49-812 |
| WT-35-1 | K10-WAT | D10-WAT | 49-816 | 49-812 |
| WT-352-1 | K10-WAT | D10-WAT | 49-816 | 49-812 |
| WT-353-1 | K20-WAT | D10-WAT | 49-831 | 49-812 |
| WT-354-1 | K20-WAT | D20-WAT | 49-831 | 49-812 |
| WT-356-1 | K10-WAT | D10-WAT | 49-816 | 49-812 |
| WT-357-2 | K10-WAT | D10-WAT | 49-816 | 49-812 |
| WT-358-1 | K10-WAT | D10-WAT | 49-816 | 49-812 |
| WT-360-1 | K20-WAT | D10-WAT | 49-831 | 49-812 |
| WT-361-1 | K20-WAT | D10-WAT | 49-831 | 49-812 |
| WT-362-1 | K10-WAT | D10-WAT | 49-816 | 49-812 |
| WT-363-1 | K20-WAT | D20-WAT | 49-831 | 49-812 |
| WT-364-1 | K10-WAT | D10-WAT | 49-816 | 49-812 |
| WT-365-1 | K20-WAT | D20-WAT | 49-831 | 49-812 |
| WT-366-1 | K10-WAT | D10-WAT | 49-816 | 49-812 |
| WT-367-1 | K10-WAT | D10-WAT | 49-816 | 49-812 |
| WT-368-1 | K20-WAT | D10-WAT | 49-831 | 49-812 |
| WT-369-1 | K10-WAT | D10-WAT | 49-816 | 49-812 |
| WT-370-1 | K10-WAT | D10-WAT | 49-816 | 49-812 |
| WT-37-1 | K10-WAT | D10-WAT | 49-816 | 49-812 |
| WT-371-1 | K10-WAT | D10-WAT | 49-816 | 49-812 |
| WT-372-1 | K10-WAT | D10-WAT | 49-816 | 49-812 |
| WT-373-1 | K10-WAT | D10-WAT | 49-816 | 49-812 |
| WT-374-1 | K20-WAT | D10-WAT | 49-831 | 49-812 |
| WT-375-1 | K20-WAT | D10-WAT | 49-831 | 49-812 |
| WT-378-1 | K10-WAT | D10-WAT | 49-816 | 49-812 |
| WT-379-1 | K10-WAT | D10-WAT | 49-816 | 49-812 |
| WT-380-1 | K10-WAT | D10-WAT | 49-816 | 49-812 |
| WT-38-1 | K10-WAT | D10-WAT | 49-816 | 49-812 |

| OEM CARBURETOR | | | OREGON | |
|---|---|---|---|---|
| Model | Kit | Gaskets | Kit | Gaskets |
| **Walbro** | | | | |
| WT-381-1 | K10-WAT | D10-WAT | 49-816 | 49-812 |
| WT-382-1 | K10-WAT | D10-WAT | 49-816 | 49-812 |
| WT-383-1 | K10-WAT | D10-WAT | 49-816 | 49-812 |
| WT-384-1 | K20-WAT | D10-WAT | 49-831 | 49-812 |
| WT-385-1 | K10-WAT | D10-WAT | 49-816 | 49-812 |
| WT-386-1 | K20-WAT | D11-WAT | 49-831 | 49-812 |
| WT-387-1 | K20-WAT | D10-WAT | 49-831 | 49-812 |
| WT-388-1 | K20-WAT | D10-WAT | 49-831 | 49-812 |
| WT-390-1 | K20-WAT | D10-WAT | 49-831 | 49-812 |
| WT-39-1 | K20-WAT | D10-WAT | 49-831 | 49-812 |
| WT-391-1 | K10-WAT | D10-WAT | 49-816 | 49-812 |
| WT-393-1 | K10-WAT | D10-WAT | 49-816 | 49-812 |
| WT-394-1 | K10-WAT | D10-WAT | 49-816 | 49-812 |
| WT-395-1 | K10-WAT | D10-WAT | 49-816 | 49-812 |
| WT-396-1 | K20-WAT | D10-WAT | 49-831 | 49-812 |
| WT-397-1 | K10-WAT | D10-WAT | 49-816 | 49-812 |
| WT-398-1 | K10-WAT | D10-WAT | 49-816 | 49-812 |
| WT-399-1 | K20-WAT | D10-WAT | 49-831 | 49-812 |
| WT-400-1 | K10-WAT | D10-WAT | 49-816 | 49-812 |
| WT-40-1 | K10-WAT | D10-WAT | 49-816 | 49-812 |
| WT-401-1 | K20-WAT | D10-WAT | 49-831 | 49-812 |
| WT-402-1 | K20-WAT | D10-WAT | 49-831 | 49-812 |
| WT-403A | K10-WAT | D10-WAT | 49-816 | 49-812 |
| WT-404-1 | K10-WAT | D10-WAT | 49-816 | 49-812 |
| WT-405-1 | K10-WAT | D10-WAT | 49-816 | 49-812 |
| WT-406-1 | K10-WAT | D10-WAT | 49-816 | 49-812 |
| WT-407-1 | K10-WAT | D10-WAT | 49-816 | 49-812 |
| WT-408-1 | K10-WAT | D10-WAT | 49-816 | 49-812 |
| WT-409-1 | K20-WAT | D10-WAT | 49-831 | 49-812 |
| WT-4-1 | K10-WAT | D10-WAT | 49-816 | 49-812 |
| WT-410-1 | K20-WAT | D10-WAT | 49-831 | 49-812 |
| WT-41-1 | K10-WAT | D10-WAT | 49-816 | 49-812 |
| WT-412-1 | K10-WAT | D10-WAT | 49-816 | 49-812 |
| WT-413-1 | K10-WAT | D10-WAT | 49-816 | 49-812 |
| WT-414-1 | K20-WAT | D10-WAT | 49-831 | 49-812 |
| WT-415-1 | K20-WAT | D10-WAT | 49-831 | 49-812 |
| WT-416-1 | K20-WAT | D10-WAT | 49-831 | 49-812 |
| WT-417-1 | K20-WAT | D10-WAT | 49-831 | 49-812 |
| WT-418-1 | K20-WAT | D10-WAT | 49-831 | 49-812 |
| WT-419-1 | K10-WAT | D10-WAT | 49-816 | 49-812 |
| WT-420-1 | K10-WAT | D10-WAT | 49-816 | 49-812 |
| WT-42-1 | K20-WAT | D10-WAT | 49-831 | 49-812 |
| WT-421-1 | K10-WAT | D10-WAT | 49-816 | 49-812 |
| WT-422-1 | K10-WAT | D10-WAT | 49-816 | 49-812 |
| WT-423-1 | K10-WAT | D10-WAT | 49-816 | 49-812 |
| WT-424-1 | K24-WAT | D22-WAT | | |
| WT-426-1 | K20-WAT | D10-WAT | 49-831 | 49-812 |
| WT-427-1 | K20-WAT | D10-WAT | 49-831 | 49-812 |
| WT-428-1 | K20-WAT | D10-WAT | 49-831 | 49-812 |
| WT-429-1 | K20-WAT | D10-WAT | 49-831 | 49-812 |
| WT-430-1 | K20-WAT | D20-WAT | 49-831 | 49-812 |
| WT-431-1 | K10-WAT | D10-WAT | 49-816 | 49-812 |
| WT-432-1 | K10-WAT | D10-WAT | 49-816 | 49-812 |
| WT-433-1 | K10-WAT | D10-WAT | 49-816 | 49-812 |
| WT-434-1 | K10-WAT | D10-WAT | 49-816 | 49-812 |
| WT-435-1 | K10-WAT | D10-WAT | 49-816 | 49-812 |
| WT-436-1 | K20-WAT | D20-WAT | 49-831 | 49-812 |
| WT-437-1 | K10-WAT | D10-WAT | 49-816 | 49-812 |
| WT-438-1 | K10-WAT | D10-WAT | 49-816 | 49-812 |
| WT-439-1 | K10-WAT | D10-WAT | 49-816 | 49-812 |
| WT-440-1 | K10-WAT | D10-WAT | 49-816 | 49-812 |
| WT-441-1 | K20-WAT | D10-WAT | 49-831 | 49-812 |
| WT-442-1 | K20-WAT | D20-WAT | 49-831 | 49-812 |
| WT-443-1 | K20-WAT | D10-WAT | 49-831 | 49-812 |
| WT-444-1 | K20-WAT | D10-WAT | 49-831 | 49-812 |
| WT-445-1 | K10-WAT | D10-WAT | 49-816 | 49-812 |
| WT-446-1 | K20-WAT | D10-WAT | 49-831 | 49-812 |
| WT-447-1 | K10-WAT | D10-WAT | 49-816 | 49-812 |
| WT-449-1 | K10-WAT | D10-WAT | 49-816 | 49-812 |
| WT-450-1 | K10-WAT | D10-WAT | 49-816 | 49-812 |
| WT-45-1 | K10-WAT | "49-812 | | |
| D10-WAT" | 49-816 | 49-812 | | |
| WT-451-1 | K20-WAT | D10-WAT | 49-831 | 49-812 |
| WT-452-1 | K20-WAT | D10-WAT | 49-831 | 49-812 |
| WT-454-1 | K10-WAT | D10-WAT | 49-816 | 49-812 |
| WT-455-1 | K10-WAT | D10-WAT | 49-816 | 49-812 |
| WT-456-1 | K10-WAT | D10-WAT | 49-816 | 49-812 |
| WT-457-1 | K10-WAT | D10-WAT | 49-816 | 49-812 |

| OEM CARBURETOR | | | OREGON | |
|---|---|---|---|---|
| Model | Kit | Gaskets | Kit | Gaskets |
| **Walbro** | | | | |
| WT-458-1 | K20-WAT | D20-WAT | 49-831 | 49-812 |
| WT-459-1 | K20-WAT | D10-WAT | 49-831 | 49-812 |
| WT-460-1 | K20-WAT | D20-WAT | 49-831 | 49-812 |
| WT-46-1 | K20-WAT | D10-WAT | 49-831 | 49-812 |
| WT-461-1 | K10-WAT | D10-WAT | 49-816 | 49-812 |
| WT-462-1 | K20-WAT | D10-WAT | 49-831 | 49-812 |
| WT-463-1 | K20-WAT | D10-WAT | 49-831 | 49-812 |
| WT-464-1 | K10-WAT | D10-WAT | 49-816 | 49-812 |
| WT-465-1 | K20-WAT | D10-WAT | 49-831 | 49-812 |
| WT-466-1 | K20-WAT | D10-WAT | 49-831 | 49-812 |
| WT-467-1 | K20-WAT | D10-WAT | 49-831 | 49-812 |
| WT-469-1 | K10-WAT | D10-WAT | 49-816 | 49-812 |
| WT-470-1 | K10-WAT | D10-WAT | 49-816 | 49-812 |
| WT-47-1 | K10-WAT | D10-WAT | 49-816 | 49-812 |
| WT-471-1 | K10-WAT | D10-WAT | 49-816 | 49-812 |
| WT-472-1 | K20-WAT | D10-WAT | 49-831 | 49-812 |
| WT-474-1 | K20-WAT | D10-WAT | 49-831 | 49-812 |
| WT-475-1 | K20-WAT | D20-WAT | 49-831 | 49-812 |
| WT-476-1 | K10-WAT | D10-WAT | 49-816 | 49-812 |
| WT-477-1 | K10-WAT | D10-WAT | 49-816 | 49-812 |
| WT-478-1 | K20-WAT | D10-WAT | 49-831 | 49-812 |
| WT-480-1 | K20-WAT | D10-WAT | 49-831 | 49-812 |
| WT-48-1 | K10-WAT | D10-WAT | 49-816 | 49-812 |
| WT-481-1 | K20-WAT | D10-WAT | 49-831 | 49-812 |
| WT-484-1 | K20-WAT | D10-WAT | 49-831 | 49-812 |
| WT-486-1 | K20-WAT | D10-WAT | 49-831 | 49-812 |
| WT-487-1 | K20-WAT | D10-WAT | 49-831 | 49-812 |
| WT-488-1 | K20-WAT | D10-WAT | 49-831 | 49-812 |
| WT-489-1 | K10-WAT | D10-WAT | 49-816 | 49-812 |
| WT-49-1 | K10-WAT | D10-WAT | 49-816 | 49-812 |
| WT-492-1 | K20-WAT | D10-WAT | 49-831 | 49-812 |
| WT-493-1 | K20-WAT | D10-WAT | 49-831 | 49-812 |
| WT-494-1 | K20-WAT | D10-WAT | 49-831 | 49-812 |
| WT-495-1 | K10-WAT | D10-WAT | 49-816 | 49-812 |
| WT-496-1 | K20-WAT | D10-WAT | 49-831 | 49-812 |
| WT-497-1 | K20-WAT | D20-WAT | 49-831 | 49-812 |
| WT-498-1 | K10-WAT | D10-WAT | 49-816 | 49-812 |
| WT-499-1 | K20-WAT | D10-WAT | 49-831 | 49-812 |
| WT-500-1 | K10-WAT | D10-WAT | 49-816 | 49-812 |
| WT-50-1 | K10-WAT | D10-WAT | 49-816 | 49-812 |
| WT-501-1 | K20-WAT | D10-WAT | 49-831 | 49-812 |
| WT-502-1 | K20-WAT | D10-WAT | 49-831 | 49-812 |
| WT-503-1 | K20-WAT | D10-WAT | 49-831 | 49-812 |
| WT-504-1 | K20-WAT | D10-WAT | 49-831 | 49-812 |
| WT-505-1 | K20-WAT | D10-WAT | 49-831 | 49-812 |
| WT-506-1 | K20-WAT | D10-WAT | 49-831 | 49-812 |
| WT-507-1 | K20-WAT | D10-WAT | 49-831 | 49-812 |
| WT-508-1 | K20-WAT | D10-WAT | 49-831 | 49-812 |
| WT-509-1 | K20-WAT | D10-WAT | 49-831 | 49-812 |
| WT-5-1 | K10-WAT | D10-WAT | 49-816 | 49-812 |
| WT-51-1 | K10-WAT | D10-WAT | 49-816 | 49-812 |
| WT-511-1 | K10-WAT | D10-WAT | 49-816 | 49-812 |
| WT-512-1 | K20-WAT | D20-WAT | 49-831 | 49-812 |
| WT-513-1 | K20-WAT | D10-WAT | 49-831 | 49-812 |
| WT-514-1 | K20-WAT | D20-WAT | 49-831 | 49-844 |
| WT-515-1 | K20-WAT | D10-WAT | 49-831 | 49-812 |
| WT-516-1 | K20-WAT | D10-WAT | 49-831 | 49-812 |
| WT-517-1 | K20-WAT | D10-WAT | 49-831 | 49-812 |
| WT-518-1 | K10-WAT | D10-WAT | 49-816 | 49-812 |
| WT-519-1 | K10-WAT | D10-WAT | 49-816 | 49-812 |
| WT-520-1 | K10-WAT | D10-WAT | 49-816 | 49-812 |
| WT-52-1 | K20-WAT | D10-WAT | 49-831 | 49-812 |
| WT-521-1 | K20-WAT | D10-WAT | 49-831 | 49-812 |
| WT-524-1 | K10-WAT | D10-WAT | 49-816 | 49-812 |
| WT-525-1 | K20-WAT | D20-WAT | 49-831 | 49-844 |
| WT-526-1 | K10-WAT | D10-WAT | 49-816 | 49-812 |
| WT-527-1 | K20-WAT | D20-WAT | 49-831 | 49-844 |
| WT-529-1 | K20-WAT | D10-WAT | 49-831 | 49-812 |
| WT-530-1 | K10-WAT | D10-WAT | 49-816 | 49-812 |
| WT-53-1 | K10-WAT | D10-WAT | 49-816 | 49-812 |
| WT-531-1 | K20-WAT | D20-WAT | 49-831 | 49-844 |
| WT-532-1 | K20-WAT | D10-WAT | 49-831 | 49-812 |
| WT-533-1 | K20-WAT | D10-WAT | 49-831 | 49-812 |
| WT-534-1 | K20-WAT | D20-WAT | 49-831 | 49-844 |
| WT-535-1 | K20-WAT | D20-WAT | 49-831 | 49-844 |
| WT-536-1 | K20-WAT | D10-WAT | 49-831 | 49-812 |
| WT-538-1 | K10-WAT | D10-WAT | 49-816 | 49-812 |
| WT-539-1 | K10-WAT | D10-WAT | 49-816 | 49-812 |

C

| OEM CARBURETOR | | | OREGON | |
|---|---|---|---|---|
| Model | Kit | Gaskets | Kit | Gaskets |
| **Walbro** | | | | |
| WT-540-1 | K20-WAT | D10-WAT | 49-831 | 49-812 |
| WT-542-1 | K20-WAT | D10-WAT | 49-831 | 49-812 |
| WT-543-1 | K20-WAT | D20-WAT | 49-831 | 49-844 |
| WT-544-1 | K20-WAT | D20-WAT | 49-831 | 49-844 |
| WT-545-1 | K20-WAT | D20-WAT | 49-831 | 49-844 |
| WT-547-1 | K20-WAT | D10-WAT | 49-831 | 49-812 |
| WT-548-1 | K10-WAT | D10-WAT | 49-816 | 49-812 |
| WT-549-1 | K20-WAT | D20-WAT | 49-831 | 49-844 |
| WT-550-1 | K10-WAT | D10-WAT | 49-816 | 49-812 |
| WT-55-1 | K10-WAT | D10-WAT | 49-816 | 49-812 |
| WT-551-1 | K10-WAT | D10-WAT | 49-816 | 49-812 |
| WT-552-1 | K10-WAT | D10-WAT | 49-816 | 49-812 |
| WT-553-1 | K20-WAT | D20-WAT | 49-831 | 49-844 |
| WT-555-1 | K20-WAT | D10-WAT | 49-831 | 49-812 |
| WT-556-1 | K20-WAT | D10-WAT | 49-831 | 49-812 |
| WT-557-1 | K20-WAT | D20-WAT | 49-831 | 49-844 |
| WT-558-1 | K20-WAT | D20-WAT | 49-831 | 49-844 |
| WT-559-1 | K26-WAT | D20-WAT | | 49-844 |
| WT-560-1 | K20-WAT | D20-WAT | 49-831 | 49-844 |
| WT-56-1 | K20-WAT | D10-WAT | 49-831 | 49-812 |
| WT-561-1 | K20-WAT | D20-WAT | 49-831 | 49-844 |
| WT-562-1 | K20-WAT | D20-WAT | 49-831 | 49-844 |
| WT-563-1 | K20-WAT | D26-WAT | 49-831 | |
| WT-565-1 | K20-WAT | D20-WAT | 49-831 | 49-844 |
| WT-566-1 | K20-WAT | D20-WAT | 49-831 | 49-844 |
| WT-567-1 | K20-WAT | D20-WAT | 49-831 | 49-844 |
| WT-568-1 | K20-WAT | D20-WAT | 49-831 | 49-844 |
| WT-569-1 | K20-WAT | D20-WAT | 49-831 | 49-844 |
| WT-570-1 | K26-WAT | D26-WAT | | |
| WT-57-1 | K10-WAT | D10-WAT | 49-816 | 49-812 |
| WT-571-1 | K20-WAT | D20-WAT | 49-831 | 49-844 |
| WT-572-1 | K20-WAT | D20-WAT | 49-831 | 49-844 |
| WT-573-1 | K20-WAT | D20-WAT | 49-831 | 49-844 |
| WT-574-1 | K20-WAT | D20-WAT | 49-831 | 49-844 |
| WT-575-1 | K20-WAT | D20-WAT | 49-831 | 49-844 |
| WT-576-1 | K26-WAT | D26-WAT | | |
| WT-577-1 | K20-WAT | D20-WAT | 49-831 | 49-844 |
| WT-578-1 | K20-WAT | D20-WAT | 49-831 | 49-844 |
| WT-579-1 | K20-WAT | D20-WAT | 49-831 | 49-844 |
| WT-58-1 | K10-WAT | D10-WAT | 49-816 | 49-812 |
| WT-582-1 | K20-WAT | D20-WAT | 49-831 | 49-844 |
| WT-583-1 | K20-WAT | D20-WAT | 49-831 | 49-844 |
| WT-584-1 | K20-WAT | D20-WAT | 49-831 | 49-844 |
| WT-586-1 | K20-WAT | D20-WAT | 49-831 | 49-844 |
| WT-587-1 | K20-WAT | D20-WAT | 49-831 | 49-844 |
| WT-588-1 | K20-WAT | D20-WAT | 49-831 | 49-844 |
| WT-589-1 | K20-WAT | D10-WAT | 49-831 | 49-812 |
| WT-59-1 | K10-WAT | D10-WAT | 49-816 | 49-812 |
| WT-591-1 | K20-WAT | D10-WAT | 49-831 | 49-812 |
| WT-592-1 | K24-WAT | D22-WAT | | |
| WT-593-1 | K20-WAT | K10-WAT | 49-831 | |
| WT-594-1 | K20-WAT | D20-WAT | 49-831 | 49-844 |
| WT-596-1 | K20-WAT | D20-WAT | 49-831 | 49-844 |
| WT-597-1 | K10-WAT | D10-WAT | 49-816 | 49-812 |
| WT-598-1 | K20-WAT | D10-WAT | 49-831 | 49-812 |
| WT-599-1 | K20-WAT | D20-WAT | 49-831 | 49-844 |
| WT-600-1 | K20-WAT | D10-WAT | 49-831 | 49-812 |
| WT-601-1 | K20-WAT | | 49-831 | |
| WT-602-1 | K20-WAT | D20-WAT | 49-831 | 49-844 |
| WT-603-1 | K20-WAT | D10-WAT | 49-831 | 49-812 |
| WT-604-1 | K20-WAT | D10-WAT | 49-831 | 49-812 |
| WT-605-1 | K20-WAT | D10-WAT | 49-831 | 49-812 |
| WT-606-1 | K20-WAT | D20-WAT | 49-831 | 49-844 |
| WT-607-1 | K20-WAT | D20-WAT | 49-831 | 49-844 |
| WT-609-1 | K20-WAT | D20-WAT | 49-831 | 49-844 |
| WT-6-1 | K20-WAT | D10-WAT | 49-831 | 49-812 |
| WT-610-1 | K20-WAT | D20-WAT | 49-831 | 49-844 |
| WT-61-1 | K20-WAT | D10-WAT | 49-831 | 49-812 |
| WT-612-1 | K20-WAT | D20-WAT | 49-831 | 49-844 |
| WT-613-1 | K10-WAT | D10-WAT | 49-816 | 49-812 |
| WT-614-1 | K20-WAT | D10-WAT | 49-831 | 49-812 |
| WT-615-1 | K20-WAT | D20-WAT | 49-831 | 49-844 |
| WT-616-1 | K20-WAT | D10-WAT | 49-831 | 49-812 |
| WT-617-1 | K20-WAT | D20-WAT | 49-831 | 49-844 |
| WT-618-1 | K10-WAT | D10-WAT | 49-816 | 49-812 |
| WT-619-1 | K10-WAT | D10-WAT | 49-816 | 49-812 |
| WT-620-1 | K24-WAT | D22-WAT | | |
| WT-62-1 | K10-WAT | D10-WAT | 49-816 | 49-812 |

| OEM CARBURETOR | | | OREGON | |
|---|---|---|---|---|
| Model | Kit | Gaskets | Kit | Gaskets |
| **Walbro** | | | | |
| WT-621-1 | K24-WAT | D22-WAT | | |
| WT-622-1 | K20-WAT | D20-WAT | 49-831 | 49-844 |
| WT-624-1 | K20-WAT | D20-WAT | 49-831 | 49-844 |
| WT-625-1 | K20-WAT | D20-WAT | 49-831 | 49-844 |
| WT-626-1 | K24-WAT | D22-WAT | | |
| WT-627-1 | K20-WAT | D20-WAT | 49-831 | 49-844 |
| WT-628-1 | K20-WAT | D20-WAT | 49-831 | 49-844 |
| WT-629-1 | K20-WAT | D20-WAT | 49-831 | 49-844 |
| WT-630-1 | K24-WAT | D22-WAT | | |
| WT-63-1 | K10-WAT | D10-WAT | 49-816 | 49-812 |
| WT-631-1 | K24-WAT | D22-WAT | | |
| WT-632-1 | K20-WAT | D20-WAT | 49-831 | 49-844 |
| WT-633-1 | K20-WAT | D20-WAT | 49-831 | 49-844 |
| WT-634-1 | K20-WAT | D20-WAT | 49-831 | 49-844 |
| WT-635-1 | K20-WAT | D20-WAT | 49-831 | 49-844 |
| WT-636-1 | K20-WAT | D20-WAT | 49-831 | 49-844 |
| WT-638-1 | K20-WAT | D20-WAT | 49-831 | 49-844 |
| WT-639-1 | K20-WAT | D20-WAT | 49-831 | 49-844 |
| WT-640-1 | K24-WAT | D22-WAT | | |
| WT-64-1 | K10-WAT | D10-WAT | 49-816 | 49-812 |
| WT-641-1 | K20-WAT | D20-WAT | 49-831 | 49-844 |
| WT-642-1 | K20-WAT | D20-WAT | 49-831 | 49-844 |
| WT-643-1 | K24-WAT | D20-WAT | | 49-844 |
| WT-644-1 | K24-WAT | D20-WAT | | 49-844 |
| WT-645-1 | K24-WAT | D20-WAT | | 49-844 |
| WT-646-1 | K24-WAT | D20-WAT | | 49-844 |
| WT-647-1 | K24-WAT | D20-WAT | | 49-844 |
| WT-648-1 | K24-WAT | D20-WAT | | 49-844 |
| WT-649-1 | K24-WAT | D20-WAT | | 49-844 |
| WT-650-1 | K20-WAT | D20-WAT | 49-831 | 49-844 |
| WT-65-1 | K10-WAT | D10-WAT | 49-816 | |
| WT-654-1 | K20-WAT | D20-WAT | 49-831 | 49-844 |
| WT-655-1 | K20-WAT | D20-WAT | 49-831 | 49-844 |
| WT-656-1 | K20-WAT | D20-WAT | 49-831 | 49-844 |
| WT-657-1 | K20-WAT | D20-WAT | 49-831 | 49-844 |
| WT-658-1 | K20-WAT | D20-WAT | 49-831 | 49-844 |
| WT-660-1 | K20-WAT | D20-WAT | 49-831 | 49-844 |
| WT-66-1 | K10-WAT | D10-WAT | 49-816 | 49-812 |
| WT-661-1 | K20-WAT | D20-WAT | 49-831 | 49-844 |
| WT-662-1 | K20-WAT | D26-WAT | 49-831 | |
| WT-663-1 | K20-WAT | D20-WAT | 49-831 | 49-844 |
| WT-664-1 | K20-WAT | D20-WAT | 49-831 | 49-844 |
| WT-665-1 | K20-WAT | D20-WAT | 49-831 | 49-844 |
| WT-666-1 | K20-WAT | D10-WAT | 49-831 | 49-812 |
| WT-667-1 | K20-WAT | D20-WAT | 49-831 | 49-844 |
| WT-668-1 | K20-WAT | D20-WAT | 49-831 | 49-844 |
| WT-669-1 | K24-WAT | D22-WAT | | |
| WT-670-1 | K24-WAT | D22-WAT | | |
| WT-67-1 | K20-WAT | D10-WAT | 49-831 | 49-812 |
| WT-671-1 | K24-WAT | D22-WAT | | |
| WT-673-1 | K20-WAT | D26-WAT | 49-831 | |
| WT-674-1 | K20-WAT | D20-WAT | 49-831 | 49-844 |
| WT-675-1 | K22-WAT | D22-WAT | | |
| WT-676-1 | K20-WAT | D20-WAT | 49-831 | 49-844 |
| WT-677-1 | K20-WAT | D20-WAT | 49-831 | 49-844 |
| WT-678-1 | K26-WAT | D26-WAT | | |
| WT-679-1 | K20-WAT | D20-WAT | 49-831 | 49-844 |
| WT-680-1 | K20-WAT | D20-WAT | 49-831 | 49-844 |
| WT-68-1 | K10-WAT | D10-WAT | 49-816 | 49-812 |
| WT-682-1 | K20-WAT | D20-WAT | 49-831 | 49-844 |
| WT-684-1 | K26-WAT | D26-WAT | | |
| WT-685-1 | K10-WAT | D10-WAT | 49-816 | 49-812 |
| WT-686-1 | K20-WAT | D20-WAT | 49-831 | 49-844 |
| WT-687-1 | K20-WAT | D20-WAT | 49-831 | 49-844 |
| WT-688-1 | K20-WAT | D20-WAT | 49-831 | 49-844 |
| WT-689-1 | K20-WAT | D20-WAT | 49-831 | 49-844 |
| WT-690-1 | K20-WAT | D20-WAT | 49-831 | 49-844 |
| WT-69-1 | K20-WAT | D10-WAT | 49-831 | 49-812 |
| WT-691-1 | K20-WAT | D20-WAT | 49-831 | 49-844 |
| WT-692-1 | K20-WAT | D20-WAT | 49-831 | 49-844 |
| WT-693-1 | K20-WAT | D20-WAT | 49-831 | 49-844 |
| WT-694-1 | K20-WAT | D20-WAT | 49-831 | 49-844 |
| WT-695-1 | K20-WAT | D20-WAT | 49-831 | 49-844 |
| WT-696-1 | K20-WAT | D20-WAT | 49-831 | 49-844 |
| WT-697-1 | K20-WAT | D20-WAT | 49-831 | 49-844 |
| WT-698-1 | K20-WAT | D20-WAT | 49-831 | 49-844 |
| WT-699-1 | K20-WAT | D20-WAT | 49-831 | 49-844 |
| WT-700-1 | K20-WAT | D20-WAT | 49-831 | 49-844 |

| OEM CARBURETOR | | | OREGON | |
|---|---|---|---|---|
| Model | Kit | Gaskets | Kit | Gaskets |
| **Walbro** | | | | |
| WT-70-1 | K20-WAT | D10-WAT | 49-831 | 49-812 |
| WT-701-1 | K20-WAT | D20-WAT | 49-831 | 49-844 |
| WT-702-1 | K20-WAT | D10-WAT | 49-831 | 49-812 |
| WT-703-1 | K20-WAT | D10-WAT | 49-831 | 49-812 |
| WT-705-1 | K26-WAT | D26-WAT | 0 | 0 |
| WT-707-1 | K20-WAT | D10-WAT | 49-831 | 49-812 |
| WT-708-1 | K20-WAT | D20-WAT | 49-831 | 49-844 |
| WT-709-1 | K26-WAT | D26-WAT | | |
| WT-710-1 | K20-WAT | D20-WAT | 49-831 | 49-844 |
| WT-71-1 | K20-WAT | D10-WAT | 49-831 | 49-812 |
| WT-711-1 | K20-WAT | D20-WAT | 49-831 | 49-844 |
| WT-712-1 | K20-WAT | D20-WAT | 49-831 | 49-844 |
| WT-714-1 | K20-WAT | D20-WAT | 49-831 | 49-844 |
| WT-715-1 | K20-WAT | D20-WAT | 49-831 | 49-844 |
| WT-716-1 | K20-WAT | D20-WAT | 49-831 | 49-844 |
| WT-717-1 | K20-WAT | D20-WAT | 49-831 | 49-844 |
| WT-718-1 | K20-WAT | D20-WAT | 49-831 | 49-844 |
| WT-720-1 | K20-WAT | D20-WAT | 49-831 | 49-844 |
| WT-72-1 | K20-WAT | D10-WAT | 49-831 | 49-812 |
| WT-721-1 | K20-WAT | D20-WAT | 49-831 | 49-844 |
| WT-722-1 | K20-WAT | D20-WAT | 49-831 | 49-844 |
| WT-723-1 | K20-WAT | D20-WAT | 49-831 | 49-844 |
| WT-724-1 | K20-WAT | D20-WAT | 49-831 | 49-844 |
| WT-725-1 | K20-WAT | D20-WAT | 49-831 | 49-844 |
| WT-726-1 | K10-WAT | D10-WAT | 49-816 | 49-812 |
| WT-727-1 | K20-WAT | D20-WAT | 49-831 | 49-844 |
| WT-728-1 | K20-WAT | D20-WAT | 49-831 | 49-844 |
| WT-729-1 | K20-WAT | D20-WAT | 49-831 | 49-844 |
| WT-730-1 | K20-WAT | D20-WAT | 49-831 | 49-844 |
| WT-73-1 | K20-WAT | D10-WAT | 49-831 | 49-812 |
| WT-731-1 | K20-WAT | D20-WAT | 49-831 | 49-844 |
| WT-732-1 | K22-WAT | D22-WAT | | |
| WT-733-1 | K20-WAT | D20-WAT | 49-831 | 49-844 |
| WT-734-1 | K20-WAT | D20-WAT | 49-831 | 49-844 |
| WT-737-1 | K20-WAT | D20-WAT | 49-831 | 49-844 |
| WT-738-1 | K20-WAT | D20-WAT | 49-831 | 49-844 |
| WT-739-1 | K20-WAT | D20-WAT | 49-831 | 49-844 |
| WT-74-1 | K10-WAT | D10-WAT | 49-816 | 49-812 |
| WT-741-1 | K10-WAT | D10-WAT | 49-816 | 49-812 |
| WT-742-1 | K20-WAT | D20-WAT | 49-831 | 49-844 |
| WT-743-1 | K10-WAT | D10-WAT | 49-816 | 49-812 |
| WT-745-1 | K20-WAT | D20-WAT | 49-831 | 49-844 |
| WT-747-1 | K20-WAT | D20-WAT | 49-831 | 49-844 |
| WT-748-1 | K20-WAT | D20-WAT | 49-831 | 49-844 |
| WT-749-1 | K20-WAT | D20-WAT | 49-831 | 49-844 |
| WT-750-1 | K10-WAT | D10-WAT | 49-816 | 49-812 |
| WT-751-1 | K20-WAT | D20-WAT | 49-831 | 49-844 |
| WT-752-1 | K20-WAT | D20-WAT | 49-831 | 49-844 |
| WT-753-1 | K20-WAT | D20-WAT | 49-831 | 49-844 |
| WT-754-1 | K20-WAT | D20-WAT | 49-831 | 49-844 |
| WT-755-1 | K20-WAT | D20-WAT | 49-831 | 49-844 |
| WT-756-1 | K20-WAT | D20-WAT | 49-831 | 49-844 |
| WT-757-1 | K10-WAT | D10-WAT | 49-816 | 49-812 |
| WT-758-1 | K10-WAT | D10-WAT | 49-816 | 49-812 |
| WT-760-1 | K20-WAT | D20-WAT | 49-831 | 49-844 |
| WT-76-1 | K20-WAT | D10-WAT | 49-831 | 49-812 |
| WT-761-1 | K20-WAT | D20-WAT | 49-831 | 49-844 |
| WT-762-1 | K20-WAT | D20-WAT | 49-831 | 49-844 |
| WT-763-1 | K10-WAT | D10-WAT | 49-816 | 49-812 |
| WT-764-1 | K20-WAT | D10-WAT | 49-831 | 49-812 |
| WT-765-1 | K20-WAT | D10-WAT | 49-831 | 49-812 |
| WT-766-1 | K10-WAT | D10-WAT | 49-816 | 49-812 |
| WT-768-1 | K10-WAT | D10-WAT | 49-816 | 49-812 |
| WT-769-1 | K20-WAT | D20-WAT | 49-831 | 49-844 |
| WT-77-1 | K10-WAT | D10-WAT | 49-816 | 49-812 |
| WT-771-1 | K10-WAT | D10-WAT | 49-816 | 49-812 |
| WT-772-1 | K10-WAT | D10-WAT | 49-816 | 49-812 |
| WT-773-1 | K24-WAT | D22-WAT | | |
| WT-774-1 | K26-WAT | D26-WAT | | |
| WT-775-1 | K24-WAT | D22-WAT | | |
| WT-776-1 | K10-WAT | D20-WAT | 49-816 | 49-844 |
| WT-777-1 | K27-WAT | | | |
| WT-778-1 | K20-WAT | D20-WAT | 49-831 | 49-844 |
| WT-779-1 | K20-WAT | D20-WAT | 49-831 | 49-844 |
| WT-780-1 | K27-WAT | | | |
| WT-78-1 | K10-WAT | D10-WAT | 49-816 | 49-812 |
| WT-781-1 | K27-WAT | | | |
| WT-782-1 | K20-WAT | D20-WAT | 49-831 | 49-844 |

# Carburetor Kit Reference

| OEM CARBURETOR | | | OREGON | |
|---|---|---|---|---|
| Model | Kit | Gaskets | Kit | Gaskets |
| **Walbro** | | | | |
| WT-783-1 | K20-WAT | D20-WAT | 49-831 | 49-844 |
| WT-784-1 | K20-WAT | D20-WAT | 49-831 | 49-844 |
| WT-785-1 | K20-WAT | | 49-831 | |
| WT-786-1 | K20-WAT | D20-WAT | 49-831 | 49-844 |
| WT-787-1 | K20-WAT | D20-WAT | 49-831 | 49-844 |
| WT-788-1 | K20-WAT | D20-WAT | 49-831 | 49-844 |
| WT-79-1 | K20-WAT | D10-WAT | 49-831 | 49-812 |
| WT-792-1 | K10-WAT | D10-WAT | 49-816 | 49-812 |
| WT-793-1 | K10-WAT | D10-WAT | 49-816 | 49-812 |
| WT-794-1 | K10-WAT | D10-WAT | 49-816 | 49-812 |
| WT-795-1 | K27-WAT | D28-WAT | | |
| WT-796-1 | K10-WAT | D10-WAT | 49-816 | 49-812 |
| WT-797-1 | K10-WAT | D10-WAT | 49-816 | 49-812 |
| WT-798-1 | K10-WAT | D10-WAT | 49-816 | 49-812 |
| WT-799-1 | K10-WAT | D10-WAT | 49-816 | 49-812 |
| WT-800-1 | K20-WAT | D20-WAT | 49-831 | 49-844 |
| WT-80-1 | K20-WAT | D10-WAT | 49-831 | 49-812 |
| WT-801-1 | K20-WAT | D10-WAT | 49-831 | 49-812 |
| WT-802-1 | K20-WAT | D10-WAT | 49-831 | 49-812 |
| WT-804-1 | K20-WAT | D20-WAT | 49-831 | 49-844 |
| WT-805-1 | K20-WAT | D20-WAT | 49-831 | 49-844 |
| WT-806-1 | K20-WAT | D20-WAT | 49-831 | 49-844 |
| WT-807-1 | K20-WAT | D20-WAT | 49-831 | 49-844 |
| WT-808-1 | K20-WAT | D20-WAT | 49-831 | 49-844 |
| WT-8-1 | K20-WAT | D10-WAT | 49-831 | 49-812 |
| WT-810-1 | K20-WAT | D20-WAT | 49-831 | 49-844 |
| WT-81-1 | K10-WAT | D10-WAT | 49-816 | 49-812 |
| WT-811-1 | K20-WAT | D20-WAT | 49-831 | 49-844 |
| WT-812-1 | K20-WAT | D10-WAT | 49-831 | 49-812 |
| WT-813-1 | K10-WAT | D10-WAT | 49-816 | 49-812 |
| WT-814-1 | K10-WAT | D10-WAT | 49-816 | 49-812 |
| WT-815-1 | K20-WAT | D20-WAT | 49-831 | 49-844 |
| WT-816-1 | K20-WAT | D20-WAT | 49-831 | 49-844 |
| WT-817-1 | K26-WAT | D26-WAT | | |
| WT-818-1 | K20-WAT | | 49-831 | |
| WT-819-1 | K10-WAT | D10-WAT | 49-816 | 49-812 |
| WT-820-1 | K20-WAT | D20-WAT | 49-831 | 49-844 |
| WT-82-1 | K10-WAT | D10-WAT | 49-816 | 49-812 |
| WT-821-1 | K20-WAT | D20-WAT | 49-831 | 49-844 |
| WT-822-1 | K20-WAT | D20-WAT | 49-831 | 49-844 |
| WT-823-1 | K20-WAT | D20-WAT | 49-831 | 49-844 |
| WT-825-1 | K20-WAT | D20-WAT | 49-831 | 49-844 |
| WT-827-1 | K20-WAT | D20-WAT | 49-831 | 49-844 |
| WT-829-1 | K20-WAT | D20-WAT | 49-831 | 49-844 |
| WT-83-1 | K10-WAT | D10-WAT | 49-816 | 49-812 |
| WT-831-1 | K20-WAT | D20-WAT | 49-831 | 49-844 |
| WT-834-1 | K20-WAT | D20-WAT | 49-831 | 49-844 |
| WT-835-1 | K20-WAT | D20-WAT | 49-831 | 49-844 |
| WT-836-1 | K20-WAT | | 49-831 | |
| WT-838-1 | K20-WAT | D20-WAT | 49-831 | 49-844 |
| WT-839-1 | K20-WAT | D20-WAT | 49-831 | 49-844 |
| WT-840-1 | K20-WAT | D20-WAT | 49-831 | 49-844 |
| WT-84-1 | K10-WAT | D10-WAT | 49-816 | 49-812 |
| WT-841-1 | K20-WAT | D20-WAT | 49-831 | 49-844 |
| WT-843-1 | K20-WAT | D20-WAT | 49-831 | 49-844 |
| WT-844-1 | K20-WAT | D20-WAT | 49-831 | 49-844 |
| WT-845-1 | K20-WAT | D20-WAT | 49-831 | 49-844 |
| WT-846-1 | K20-WAT | D20-WAT | 49-831 | 49-844 |
| WT-847-1 | K20-WAT | D20-WAT | 49-831 | 49-844 |
| WT-850-1 | K20-WAT | D20-WAT | 49-831 | 49-844 |
| WT-85-1 | K10-WAT | D10-WAT | 49-816 | 49-812 |
| WT-852-1 | K20-WAT | D20-WAT | 49-831 | 49-844 |
| WT-853-1 | K20-WAT | D20-WAT | 49-831 | 49-844 |
| WT-855-1 | K20-WAT | D20-WAT | 49-831 | 49-844 |
| WT-856-1 | K20-WAT | D20-WAT | 49-831 | 49-844 |
| WT-857-1 | K20-WAT | D20-WAT | 49-831 | 49-844 |
| WT-858-1 | K20-WAT | | 49-831 | |
| WT-860-1 | K20-WAT | D20-WAT | 49-831 | 49-844 |
| WT-86-1 | K10-WAT | D10-WAT | 49-816 | 49-812 |
| WT-861-1 | K20-WAT | D20-WAT | 49-831 | 49-844 |
| WT-863-1 | K20-WAT | D20-WAT | 49-831 | 49-844 |
| WT-864-1 | K20-WAT | D20-WAT | 49-831 | 49-844 |
| WT-865-1 | K20-WAT | D20-WAT | 49-831 | 49-844 |
| WT-866-1 | K24-WAT | D22-WAT | | |
| WT-869-1 | K20-WAT | D20-WAT | 49-831 | 49-844 |
| WT-870-1 | K20-WAT | D20-WAT | 49-831 | 49-844 |
| WT-87-1 | K10-WAT | D10-WAT | 49-816 | 49-812 |
| WT-873-1 | K20-WAT | D20-WAT | 49-831 | 49-844 |

| OEM CARBURETOR | | | OREGON | |
|---|---|---|---|---|
| Model | Kit | Gaskets | Kit | Gaskets |
| **Walbro** | | | | |
| WT-875-1 | K20-WAT | D20-WAT | 49-831 | 49-844 |
| WT-878-1 | K27-WAT | | | |
| WT-879-1 | K20-WAT | D20-WAT | 49-831 | 49-844 |
| WT-88-1 | K10-WAT | D10-WAT | 49-816 | 49-812 |
| WT-89-1 | K20-WAT | D10-WAT | 49-831 | 49-812 |
| WT-891-1 | K20-WAT | D20-WAT | 49-831 | 49-844 |
| WT-896-1 | K20-WAT | D20-WAT | 49-831 | 49-844 |
| WT-897-1 | K20-WAT | D20-WAT | 49-831 | 49-844 |
| WT-899-1 | K20-WAT | D20-WAT | 49-831 | 49-844 |
| WT-900-1 | K20-WAT | | 49-831 | |
| WT-90-1 | K22-WAT | D22-WAT | | |
| WT-901-1 | K27-WAT | | | |
| WT-902-1 | K20-WAT | D20-WAT | 49-831 | 49-844 |
| WT-904-1 | K27-WAT | | | |
| WT-906-1 | K27-WAT | | | |
| WT-909-1 | K20-WAT | D20-WAT | 49-831 | 49-844 |
| WT-9-1 | K20-WAT | D10-WAT | 49-831 | 49-812 |
| WT-910-1 | K27-WAT | | | |
| WT-91-1 | K22-WAT | D22-WAT | | |
| WT-917-1 | K20-WAT | | 49-831 | |
| WT-918-1 | K20-WAT | | 49-831 | |
| WT-92-1 | K22-WAT | D22-WAT | | |
| WT-924-1 | K24-WAT | | | |
| WT-925-1 | K24-WAT | | | |
| WT-927-1 | K27-WAT | | | |
| WT-929-1 | K27-WAT | | | |
| WT-930-1 | K27-WAT | | | |
| WT-93-1 | K10-WAT | D10-WAT | 49-816 | 49-812 |
| WT-932-1 | K27-WAT | | | |
| WT-934-1 | K27-WAT | | | |
| WT-935-1 | K27-WAT | | | |
| WT-936-1 | K27-WAT | | | |
| WT-94-1 | K10-WAT | D10-WAT | 49-816 | 49-812 |
| WT-942-1 | K27-WAT | | | |
| WT-944-1 | K20-WAT | | 49-831 | |
| WT-945-1 | K27-WAT | | | |
| WT-948-1 | K27-WAT | | | |
| WT-96-1 | K10-WAT | D10-WAT | 49-816 | 49-812 |
| WT-964-1 | K20-WAT | | 49-831 | |
| WT-97-1 | K10-WAT | D10-WAT | 49-816 | 49-812 |
| WT-973-1 | K24-WAT | | | |
| WT-980-1 | K27-WAT | | | |
| WT-98-1 | K20-WAT | D10-WAT | 49-831 | 49-812 |
| WT-981-1 | K27-WAT | | | |
| WT-990-1 | K20-WAT | | 49-831 | |
| WT-99-1 | K20-WAT | D10-WAT | 49-831 | 49-812 |
| WT-992-1 | K27-WAT | | | |
| WT-993-1 | K27-WAT | | | |
| WTA-11-1 | K20-WTA | D10-WTA | | |
| WTA-12-1 | K20-WTA | D10-WTA | | |
| WTA-13-1 | K20-WTA | D10-WTA | | |
| WTA-14-1 | K20-WTA | D10-WTA | | |
| WTA-15-1 | K20-WTA | D10-WTA | | |
| WTA-18-1 | K20-WTA | D10-WTA | | |
| WTA-19-1 | K20-WTA | D10-WTA | | |
| WTA-20-1 | K20-WTA | D10-WTA | | |
| WTA-2-1 | K20-WTA | D10-WTA | | |
| WTA-21-1 | K20-WTA | D10-WTA | | |
| WTA-23-1 | K20-WTA | D10-WTA | | |
| WTA-24-1 | K20-WTA | D10-WTA | | |
| WTA-25-1 | K20-WTA | D10-WTA | | |
| WTA-26-1 | K20-WTA | D10-WTA | | |
| WTA-28-1 | K20-WTA | D10-WTA | | |
| WTA-29-1 | K20-WTA | D10-WTA | | |
| WTA-30-1 | K20-WTA | D10-WTA | | |
| WTA-3-1 | K20-WTA | D10-WTA | | |
| WTA-31-1 | K20-WTA | D10-WTA | | |
| WTA-32-1 | K20-WTA | | | |
| WTA-33-1 | K10-WTA | | | |
| WTA-4-1 | K20-WTA | D10-WTA | | |
| WTA-5-1 | K20-WTA | D10-WTA | | |
| WTA-6-1 | K20-WTA | D10-WTA | | |
| WTA-7-1 | K20-WTA | D10-WTA | | |
| WTA-8-1 | K20-WTA | D10-WTA | | |
| WTA-9-1 | K20-WTA | D10-WTA | | |
| WY-10-1 | K10-WY | D10-WY | 49-875 | 49-839 |
| WY-1-1 | K10-WY | D10-WY | 49-875 | 49-839 |
| WY-12-1 | K10-WY | D10-WY | 49-875 | 49-839 |

| OEM CARBURETOR | | | OREGON | |
|---|---|---|---|---|
| Model | Kit | Gaskets | Kit | Gaskets |
| **Walbro** | | | | |
| WY-13-1 | K10-WY | D10-WY | 49-875 | 49-839 |
| WY-14-1 | K10-WY | D10-WY | 49-875 | 49-839 |
| WY-15-1 | K10-WY | D10-WY | 49-875 | 49-839 |
| WY-16-1 | K10-WY | D10-WY | 49-875 | 49-839 |
| WY-17-1 | K10-WY | D10-WY | 49-875 | 49-839 |
| WY-18-1 | K10-WY | D10-WY | 49-875 | 49-839 |
| WY-19-1 | K10-WY | D10-WY | 49-875 | 49-839 |
| WY-20-1 | K10-WY | D10-WY | 49-875 | 49-839 |
| WY-21-1 | K10-WY | D10-WY | 49-875 | 49-839 |
| WY-22-1 | K10-WY | D10-WY | 49-875 | 49-839 |
| WY-23-1 | K10-WY | D10-WY | 49-875 | 49-839 |
| WY-24-1 | K10-WY | D10-WY | 49-875 | 49-839 |
| WY-25-1 | K10-WY | D10-WY | 49-875 | 49-839 |
| WY-26-1 | K10-WY | D10-WY | 49-875 | 49-839 |
| WY-27-1 | K10-WY | D10-WY | 49-875 | 49-839 |
| WY-28-1 | K10-WY | D10-WY | 49-875 | 49-839 |
| WY-29-1 | K10-WY | D10-WY | 49-875 | 49-839 |
| WY-30-1 | K10-WY | D10-WY | 49-875 | 49-839 |
| WY-3-1 | K10-WY | D10-WY | 49-875 | 49-839 |
| WY-31-1 | K10-WY | D10-WY | 49-875 | 49-839 |
| WY-32-1 | K10-WY | D10-WY | 49-875 | 49-839 |
| WY-33-1 | K10-WY | D10-WY | 49-875 | 49-839 |
| WY-34-1 | K10-WY | D10-WY | 49-875 | 49-839 |
| WY-35-1 | K10-WY | D10-WY | 49-875 | 49-839 |
| WY-36-1 | K10-WY | D10-WY | 49-875 | 49-839 |
| WY-37-1 | K10-WY | D10-WY | 49-875 | 49-839 |
| WY-38-1 | K10-WY | D10-WY | 49-875 | 49-839 |
| WY-39-1 | K10-WY | D10-WY | 49-875 | 49-839 |
| WY-40-1 | K10-WY | D10-WY | 49-875 | 49-839 |
| WY-4-1 | K10-WY | D10-WY | 49-875 | 49-839 |
| WY-42-1 | K10-WY | D10-WY | 49-875 | 49-839 |
| WY-43-1 | K10-WY | D10-WY | 49-875 | 49-839 |
| WY-45-1 | K10-WY | D10-WY | 49-875 | 49-839 |
| WY-46-1 | K10-WY | D10-WY | 49-875 | 49-839 |
| WY-47-1 | K10-WY | D10-WY | 49-875 | 49-839 |
| WY-48-1 | K10-WY | D10-WY | 49-875 | 49-839 |
| WY-49-1 | K10-WY | D10-WY | 49-875 | 49-839 |
| WY-50-1 | K10-WY | D10-WY | 49-875 | 49-839 |
| WY-5-1 | K10-WY | D10-WY | 49-875 | 49-839 |
| WY-51-1 | K10-WY | D10-WY | 49-875 | 49-839 |
| WY-52-1 | K10-WY | D10-WY | 49-875 | 49-839 |
| WY-53-1 | K10-WY | D10-WY | 49-875 | 49-839 |
| WY-54-1 | K10-WY | D10-WY | 49-875 | 49-839 |
| WY-55-1 | K10-WY | D10-WY | 49-875 | 49-839 |
| WY-56-1 | K10-WY | D10-WY | 49-875 | 49-839 |
| WY-57-1 | K10-WY | D10-WY | 49-875 | 49-839 |
| WY-58-1 | K10-WY | D10-WY | 49-875 | 49-839 |
| WY-59-1 | K10-WY | D10-WY | 49-875 | 49-839 |
| WY-60-1 | K10-WY | D10-WY | 49-875 | 49-839 |
| WY-6-1 | K10-WY | D10-WY | 49-875 | 49-839 |
| WY-61-1 | K10-WY | D10-WY | 49-875 | 49-839 |
| WY-62-1 | K10-WY | D10-WY | 49-875 | 49-839 |
| WY-63-1 | K10-WY | D10-WY | 49-875 | 49-839 |
| WY-64-1 | K10-WY | D10-WY | 49-875 | 49-839 |
| WY-65-1 | K10-WY | D10-WY | 49-875 | 49-839 |
| WY-66-1 | K10-WY | D10-WY | 49-875 | 49-839 |
| WY-67-1 | K10-WY | D10-WY | 49-875 | 49-839 |
| WY-68-1 | K10-WY | D10-WY | 49-875 | 49-839 |
| WY-69-1 | K10-WY | D10-WY | 49-875 | 49-839 |
| WY-7-1 | K10-WY | D10-WY | 49-875 | 49-839 |
| WY-71-1 | K10-WY | D10-WY | 49-875 | 49-839 |
| WY-8-1 | K10-WY | D10-WY | 49-875 | 49-839 |
| WY-9-1 | K10-WY | D10-WY | 49-875 | 49-839 |
| WYF-1-1 | K10-WYF | D10-WYF | | |
| WYF-2-1 | K10-WYF | D10-WYF | | |
| WYF-3-1 | K10-WYF | D10-WYF | | |
| WYF-5-1 | K10-WYF | D10-WYF | | |
| WYF-6-1 | K10-WYF | D10-WYF | | |
| WYF-8-1 | K10-WYF | D10-WYF | | |
| WYF-9-1 | K10-WYF | D10-WYF | | |
| WYJ-100-1 | K20-WYJ | D20-WYJ | 49-882 | 49-281 |
| WYJ-10-1 | K20-WYJ | D20-WYJ | 49-882 | 49-281 |
| WYJ-102-1 | K20-WYJ | D20-WYJ | 49-882 | 49-281 |
| WYJ-104-1 | K20-WYJ | D20-WYJ | 49-882 | 49-281 |
| WYJ-105-1 | K20-WYJ | D20-WYJ | 49-882 | 49-281 |
| WYJ-106-1 | K20-WYJ | D20-WYJ | 49-882 | 49-281 |
| WYJ-107-1 | K20-WYJ | D20-WYJ | 49-882 | 49-281 |
| WYJ-108-1 | K20-WYJ | D20-WYJ | 49-882 | 49-281 |

| OEM CARBURETOR | | | OREGON | |
|---|---|---|---|---|
| Model | Kit | Gaskets | Kit | Gaskets |
| **Walbro** | | | | |
| WYJ-1-1 | K20-WYJ | D20-WYJ | 49-882 | 49-281 |
| WYJ-110-1 | K20-WYJ | D20-WYJ | 49-882 | 49-281 |
| WYJ-11-1 | K20-WYJ | D20-WYJ | 49-882 | 49-281 |
| WYJ-111-1 | K20-WYJ | D20-WYJ | 49-882 | 49-281 |
| WYJ-112-1 | K20-WYJ | D20-WYJ | 49-882 | 49-281 |
| WYJ-113-1 | K20-WYJ | D20-WYJ | 49-882 | 49-281 |
| WYJ-114-1 | K20-WYJ | D20-WYJ | 49-882 | 49-281 |
| WYJ-115-1 | K20-WYJ | D20-WYJ | 49-882 | 49-281 |
| WYJ-116-1 | K20-WYJ | D20-WYJ | 49-882 | 49-281 |
| WYJ-117-1 | K20-WYJ | D20-WYJ | 49-882 | 49-281 |
| WYJ-118-1 | K20-WYJ | D20-WYJ | 49-882 | 49-281 |
| WYJ-119-1 | K20-WYJ | D20-WYJ | 49-882 | 49-281 |
| WYJ-120-1 | K20-WYJ | D20-WYJ | 49-882 | 49-281 |
| WYJ-12-1 | K20-WYJ | D20-WYJ | 49-882 | 49-281 |
| WYJ-121-1 | K20-WYJ | D20-WYJ | 49-882 | 49-281 |
| WYJ-122-1 | K20-WYJ | D20-WYJ | 49-882 | 49-281 |
| WYJ-123-1 | K20-WYJ | D20-WYJ | 49-882 | 49-281 |
| WYJ-125-1 | K20-WYJ | D20-WYJ | 49-882 | 49-281 |
| WYJ-126-1 | K20-WYJ | D20-WYJ | 49-882 | 49-281 |
| WYJ-127-1 | K20-WYJ | D20-WYJ | 49-882 | 49-281 |
| WYJ-128-1 | K20-WYJ | D20-WYJ | 49-882 | 49-281 |
| WYJ-129-1 | K20-WYJ | D20-WYJ | 49-882 | 49-281 |
| WYJ-130-1 | K20-WYJ | D20-WYJ | 49-882 | 49-281 |
| WYJ-13-1 | K20-WYJ | D20-WYJ | 49-882 | 49-281 |
| WYJ-131-1 | K20-WYJ | D20-WYJ | 49-882 | 49-281 |
| WYJ-132-1 | K20-WYJ | D20-WYJ | 49-882 | 49-281 |
| WYJ-133-1 | K20-WYJ | D20-WYJ | 49-882 | 49-281 |
| WYJ-134-1 | K20-WYJ | D20-WYJ | 49-882 | 49-281 |
| WYJ-135-1 | K20-WYJ | D20-WYJ | 49-882 | 49-281 |
| WYJ-136-1 | K20-WYJ | D20-WYJ | 49-882 | 49-281 |
| WYJ-137-1 | K20-WYJ | D20-WYJ | 49-882 | 49-281 |
| WYJ-138-1 | K20-WYJ | D20-WYJ | 49-882 | 49-281 |
| WYJ-139-1 | K20-WYJ | D20-WYJ | 49-882 | 49-281 |
| WYJ-14-1 | K20-WYJ | D20-WYJ | 49-882 | 49-281 |
| WYJ-141-1 | K20-WYJ | D20-WYJ | 49-882 | 49-281 |
| WYJ-142-1 | K20-WYJ | D20-WYJ | 49-882 | 49-281 |
| WYJ-143-1 | K20-WYJ | D20-WYJ | 49-882 | 49-281 |
| WYJ-144-1 | K20-WYJ | D20-WYJ | 49-882 | 49-281 |
| WYJ-145-1 | K20-WYJ | D20-WYJ | 49-882 | 49-281 |
| WYJ-146-1 | K20-WYJ | D20-WYJ | 49-882 | 49-281 |
| WYJ-147-1 | K20-WYJ | D20-WYJ | 49-882 | 49-281 |
| WYJ-148-1 | K20-WYJ | D20-WYJ | 49-882 | 49-281 |
| WYJ-149-1 | K20-WYJ | D20-WYJ | 49-882 | 49-281 |
| WYJ-150-1 | K20-WYJ | D20-WYJ | 49-882 | 49-281 |
| WYJ-15-1 | K20-WYJ | D20-WYJ | 49-882 | 49-281 |
| WYJ-151-1 | K20-WYJ | D20-WYJ | 49-882 | 49-281 |
| WYJ-152-1 | K20-WYJ | D20-WYJ | 49-882 | 49-281 |
| WYJ-153-1 | K20-WYJ | D20-WYJ | 49-882 | 49-281 |
| WYJ-154-1 | K20-WYJ | D20-WYJ | 49-882 | 49-281 |
| WYJ-155-1 | K20-WYJ | D20-WYJ | 49-882 | 49-281 |
| WYJ-156-1 | K20-WYJ | D20-WYJ | 49-882 | 49-281 |
| WYJ-157-1 | K20-WYJ | D20-WYJ | 49-882 | 49-281 |
| WYJ-158-1 | K20-WYJ | D20-WYJ | 49-882 | 49-281 |
| WYJ-159-1 | K20-WYJ | D20-WYJ | 49-882 | 49-281 |
| WYJ-160-1 | K20-WYJ | D20-WYJ | 49-882 | 49-281 |
| WYJ-16-1 | K20-WYJ | D20-WYJ | 49-882 | 49-281 |
| WYJ-162-1 | K20-WYJ | D20-WYJ | 49-882 | 49-281 |
| WYJ-163-1 | K20-WYJ | D20-WYJ | 49-882 | 49-281 |
| WYJ-164-1 | K20-WYJ | D20-WYJ | 49-882 | 49-281 |
| WYJ-165-1 | K20-WYJ | D20-WYJ | 49-882 | 49-281 |
| WYJ-166-1 | K20-WYJ | D20-WYJ | 49-882 | 49-281 |
| WYJ-167-1 | K20-WYJ | D20-WYJ | 49-882 | 49-281 |
| WYJ-168-1 | K20-WYJ | D20-WYJ | 49-882 | 49-281 |
| WYJ-169-1 | K20-WYJ | D20-WYJ | 49-882 | 49-281 |
| WYJ-170-1 | K20-WYJ | D20-WYJ | 49-882 | 49-281 |
| WYJ-17-1 | K20-WYJ | D20-WYJ | 49-882 | 49-281 |
| WYJ-171-1 | K20-WYJ | D20-WYJ | 49-882 | 49-281 |
| WYJ-172-1 | K20-WYJ | D20-WYJ | 49-882 | 49-281 |
| WYJ-173-1 | K20-WYJ | D20-WYJ | 49-882 | 49-281 |
| WYJ-174-1 | K20-WYJ | D20-WYJ | 49-882 | 49-281 |
| WYJ-175-1 | K20-WYJ | D20-WYJ | 49-882 | 49-281 |
| WYJ-176-1 | K20-WYJ | D20-WYJ | 49-882 | 49-281 |
| WYJ-177-1 | K20-WYJ | D20-WYJ | 49-882 | 49-281 |
| WYJ-179-1 | K20-WYJ | D20-WYJ | 49-882 | 49-281 |
| WYJ-180-1 | K20-WYJ | D20-WYJ | 49-882 | 49-281 |
| WYJ-18-1 | K20-WYJ | D20-WYJ | 49-882 | 49-281 |
| WYJ-182-1 | K20-WYJ | D20-WYJ | 49-882 | 49-281 |
| WYJ-182-1 | K20-WYJ | D20-WYJ | 49-882 | 49-281 |

| OEM CARBURETOR | | | OREGON | |
|---|---|---|---|---|
| Model | Kit | Gaskets | Kit | Gaskets |
| **Walbro** | | | | |
| WYJ-183-1 | K20-WYJ | D20-WYJ | 49-882 | 49-281 |
| WYJ-184-1 | K20-WYJ | D20-WYJ | 49-882 | 49-281 |
| WYJ-186-1 | K20-WYJ | D20-WYJ | 49-882 | 49-281 |
| WYJ-188-1 | K20-WYJ | D20-WYJ | 49-882 | 49-281 |
| WYJ-189-1 | K20-WYJ | D20-WYJ | 49-882 | 49-281 |
| WYJ-190-1 | K20-WYJ | D20-WYJ | 49-882 | 49-281 |
| WYJ-19-1 | K20-WYJ | D20-WYJ | 49-882 | 49-281 |
| WYJ-191-1 | K20-WYJ | D20-WYJ | 49-882 | 49-281 |
| WYJ-192-1 | K20-WYJ | D20-WYJ | 49-882 | |
| WYJ-194-1 | K20-WYJ | D20-WYJ | 49-882 | 49-281 |
| WYJ-195-1 | K20-WYJ | D20-WYJ | 49-882 | 49-281 |
| WYJ-196-1 | K20-WYJ | D20-WYJ | 49-882 | 49-281 |
| WYJ-197-1 | K20-WYJ | D20-WYJ | 49-882 | 49-281 |
| WYJ-198-1 | K20-WYJ | D20-WYJ | 49-882 | 49-281 |
| WYJ-199-1 | K20-WYJ | D20-WYJ | 49-882 | 49-281 |
| WYJ-200-1 | K20-WYJ | D20-WYJ | 49-882 | 49-281 |
| WYJ-20-1 | K20-WYJ | D20-WYJ | 49-882 | 49-281 |
| WYJ-201-1 | K20-WYJ | D20-WYJ | 49-882 | 49-281 |
| WYJ-202-1 | K20-WYJ | D20-WYJ | 49-882 | 49-281 |
| WYJ-203-1 | K20-WYJ | D20-WYJ | 49-882 | 49-281 |
| WYJ-204-1 | K20-WYJ | D20-WYJ | 49-882 | 49-281 |
| WYJ-205-1 | K20-WYJ | D20-WYJ | 49-882 | 49-281 |
| WYJ-206-1 | K20-WYJ | D20-WYJ | 49-882 | 49-281 |
| WYJ-207-1 | K20-WYJ | D20-WYJ | 49-882 | 49-281 |
| WYJ-208-1 | K20-WYJ | D20-WYJ | 49-882 | 49-281 |
| WYJ-209-1 | K20-WYJ | D20-WYJ | 49-882 | 49-281 |
| WYJ-2-1 | K20-WYJ | D20-WYJ | 49-882 | 49-281 |
| WYJ-210-1 | K20-WYJ | D20-WYJ | 49-882 | 49-281 |
| WYJ-21-1 | K20-WYJ | D20-WYJ | 49-882 | 49-281 |
| WYJ-211-1 | K20-WYJ | D20-WYJ | 49-882 | 49-281 |
| WYJ-212-1 | K20-WYJ | D20-WYJ | 49-882 | 49-281 |
| WYJ-213-1 | K20-WYJ | D20-WYJ | 49-882 | 49-281 |
| WYJ-214-1 | K20-WYJ | D20-WYJ | 49-882 | 49-281 |
| WYJ-215-1 | K20-WYJ | D20-WYJ | 49-882 | 49-281 |
| WYJ-216-1 | K20-WYJ | D20-WYJ | 49-882 | 49-281 |
| WYJ-217-1 | K20-WYJ | D20-WYJ | 49-882 | 49-281 |
| WYJ-218-1 | K20-WYJ | D20-WYJ | 49-882 | 49-281 |
| WYJ-219-1 | K20-WYJ | D20-WYJ | 49-882 | 49-281 |
| WYJ-220-1 | K20-WYJ | D20-WYJ | 49-882 | |
| WYJ-22-1 | K20-WYJ | D20-WYJ | 49-882 | 49-281 |
| WYJ-221-1 | K20-WYJ | D20-WYJ | 49-882 | 49-281 |
| WYJ-222-1 | K20-WYJ | D20-WYJ | 49-882 | 49-281 |
| WYJ-223-1 | K20-WYJ | D20-WYJ | 49-882 | 49-281 |
| WYJ-224-1 | K20-WYJ | D20-WYJ | 49-882 | 49-281 |
| WYJ-225-1 | K20-WYJ | D20-WYJ | 49-882 | 49-281 |
| WYJ-226-1 | K20-WYJ | D20-WYJ | 49-882 | 49-281 |
| WYJ-227-1 | K20-WYJ | D20-WYJ | 49-882 | 49-281 |
| WYJ-228-1 | K20-WYJ | D20-WYJ | 49-882 | 49-281 |
| WYJ-229-1 | K20-WYJ | D20-WYJ | 49-882 | 49-281 |
| WYJ-230-1 | K20-WYJ | D20-WYJ | 49-882 | 49-281 |
| WYJ-23-1 | K20-WYJ | D20-WYJ | 49-882 | 49-281 |
| WYJ-231-1 | K20-WYJ | D20-WYJ | 49-882 | 49-281 |
| WYJ-232-1 | K20-WYJ | D20-WYJ | 49-882 | 49-281 |
| WYJ-233-1 | K20-WYJ | D20-WYJ | 49-882 | 49-281 |
| WYJ-234-1 | K20-WYJ | D20-WYJ | 49-882 | 49-281 |
| WYJ-235-1 | K20-WYJ | D20-WYJ | 49-882 | 49-281 |
| WYJ-236-1 | K20-WYJ | D20-WYJ | 49-882 | 49-281 |
| WYJ-237-1 | K20-WYJ | D20-WYJ | 49-882 | 49-281 |
| WYJ-238-1 | K20-WYJ | D20-WYJ | 49-882 | 49-281 |
| WYJ-239-1 | K20-WYJ | D20-WYJ | 49-882 | 49-281 |
| WYJ-240-1 | K20-WYJ | D20-WYJ | 49-882 | 49-281 |
| WYJ-24-1 | K20-WYJ | D20-WYJ | 49-882 | 49-281 |
| WYJ-241-1 | K20-WYJ | D20-WYJ | 49-882 | 49-281 |
| WYJ-242-1 | K20-WYJ | D20-WYJ | 49-882 | 49-281 |
| WYJ-243-1 | K20-WYJ | D20-WYJ | 49-882 | 49-281 |
| WYJ-244-1 | K20-WYJ | D20-WYJ | 49-882 | 49-281 |
| WYJ-245-1 | K20-WYJ | D20-WYJ | 49-882 | 49-281 |
| WYJ-246-1 | K20-WYJ | D20-WYJ | 49-882 | 49-281 |
| WYJ-247-1 | K20-WYJ | D20-WYJ | 49-882 | 49-281 |
| WYJ-248-1 | K20-WYJ | D20-WYJ | 49-882 | 49-281 |
| WYJ-249-1 | K20-WYJ | D20-WYJ | 49-882 | 49-281 |
| WYJ-250-1 | K20-WYJ | D20-WYJ | 49-882 | 49-281 |
| WYJ-252-1 | K20-WYJ | D20-WYJ | 49-882 | 49-281 |
| WYJ-253-1 | K20-WYJ | D20-WYJ | 49-882 | 49-281 |
| WYJ-255-1 | K20-WYJ | D20-WYJ | 49-882 | 49-281 |
| WYJ-256-1 | K20-WYJ | D20-WYJ | 49-882 | 49-281 |
| WYJ-257-1 | K20-WYJ | D20-WYJ | 49-882 | 49-281 |
| WYJ-258-1 | K20-WYJ | D20-WYJ | 49-882 | 49-281 |

| OEM CARBURETOR | | | OREGON | |
|---|---|---|---|---|
| Model | Kit | Gaskets | Kit | Gaskets |
| **Walbro** | | | | |
| WYJ-259-1 | K20-WYJ | D20-WYJ | 49-882 | 49-281 |
| WYJ-260-1 | K20-WYJ | D20-WYJ | 49-882 | 49-281 |
| WYJ-261-1 | K20-WYJ | D20-WYJ | 49-882 | 49-281 |
| WYJ-262-1 | K20-WYJ | D20-WYJ | 49-882 | 49-281 |
| WYJ-263-1 | K20-WYJ | D20-WYJ | 49-882 | 49-281 |
| WYJ-264-1 | K20-WYJ | D20-WYJ | 49-882 | 49-281 |
| WYJ-265-1 | K20-WYJ | D20-WYJ | 49-882 | 49-281 |
| WYJ-267-1 | K20-WYJ | D20-WYJ | 49-882 | 49-281 |
| WYJ-268-1 | K20-WYJ | D20-WYJ | 49-882 | 49-281 |
| WYJ-269-1 | K20-WYJ | D20-WYJ | 49-882 | 49-281 |
| WYJ-270-1 | K20-WYJ | D20-WYJ | 49-882 | 49-281 |
| WYJ-27-1 | K20-WYJ | D20-WYJ | 49-882 | 49-281 |
| WYJ-271-1 | K20-WYJ | D20-WYJ | 49-882 | 49-281 |
| WYJ-273-1 | K20-WYJ | D20-WYJ | 49-882 | 49-281 |
| WYJ-274-1 | K20-WYJ | D20-WYJ | 49-882 | 49-281 |
| WYJ-275-1 | K20-WYJ | D20-WYJ | 49-882 | 49-281 |
| WYJ-276-1 | K20-WYJ | D20-WYJ | 49-882 | 49-281 |
| WYJ-278-1 | K20-WYJ | D20-WYJ | 49-882 | 49-281 |
| WYJ-279-1 | K20-WYJ | D20-WYJ | 49-882 | 49-281 |
| WYJ-280-1 | K20-WYJ | D20-WYJ | 49-882 | 49-281 |
| WYJ-28-1 | K20-WYJ | D20-WYJ | 49-882 | 49-281 |
| WYJ-281-1 | K20-WYJ | D20-WYJ | 49-882 | 49-281 |
| WYJ-282-1 | K20-WYJ | D20-WYJ | 49-882 | 49-281 |
| WYJ-283-1 | K20-WYJ | D20-WYJ | 49-882 | 49-281 |
| WYJ-284-1 | K20-WYJ | D20-WYJ | 49-882 | 49-281 |
| WYJ-285-1 | K20-WYJ | D20-WYJ | 49-882 | 49-281 |
| WYJ-286-1 | K20-WYJ | D20-WYJ | 49-882 | 49-281 |
| WYJ-288-1 | K20-WYJ | D20-WYJ | 49-882 | 49-281 |
| WYJ-289-1 | K20-WYJ | D20-WYJ | 49-882 | 49-281 |
| WYJ-290-1 | K20-WYJ | D20-WYJ | 49-882 | 49-281 |
| WYJ-29-1 | K20-WYJ | D20-WYJ | 49-882 | 49-281 |
| WYJ-291-1 | K20-WYJ | D20-WYJ | 49-882 | 49-281 |
| WYJ-292-1 | K20-WYJ | D20-WYJ | 49-882 | 49-281 |
| WYJ-293-1 | K20-WYJ | D20-WYJ | 49-882 | 49-281 |
| WYJ-294-1 | K20-WYJ | D20-WYJ | 49-882 | 49-281 |
| WYJ-295-1 | K20-WYJ | D20-WYJ | 49-882 | 49-281 |
| WYJ-296-1 | K20-WYJ | D20-WYJ | 49-882 | 49-281 |
| WYJ-297-1 | K20-WYJ | D20-WYJ | 49-882 | 49-281 |
| WYJ-298-1 | K20-WYJ | D20-WYJ | 49-882 | 49-281 |
| WYJ-299-1 | K20-WYJ | D20-WYJ | 49-882 | 49-281 |
| WYJ-300-1 | K20-WYJ | D20-WYJ | 49-882 | 49-281 |
| WYJ-30-1 | K20-WYJ | D20-WYJ | 49-882 | 49-281 |
| WYJ-301-1 | K20-WYJ | D20-WYJ | 49-882 | 49-281 |
| WYJ-302-1 | K20-WYJ | D20-WYJ | 49-882 | 49-281 |
| WYJ-303-1 | K20-WYJ | D20-WYJ | 49-882 | 49-281 |
| WYJ-304-1 | K20-WYJ | D20-WYJ | 49-882 | 49-281 |
| WYJ-305-1 | K20-WYJ | D20-WYJ | 49-882 | 49-281 |
| WYJ-306-1 | K20-WYJ | D20-WYJ | 49-882 | 49-281 |
| WYJ-307-1 | K20-WYJ | D20-WYJ | 49-882 | 49-281 |
| WYJ-309-1 | K20-WYJ | D20-WYJ | 49-882 | 49-281 |
| WYJ-3-1 | K20-WYJ | D20-WYJ | 49-882 | 49-281 |
| WYJ-310-1 | K20-WYJ | D20-WYJ | 49-882 | 49-281 |
| WYJ-31-1 | K20-WYJ | D20-WYJ | 49-882 | 49-281 |
| WYJ-311-1 | K20-WYJ | D20-WYJ | 49-882 | 49-281 |
| WYJ-312-1 | K20-WYJ | D20-WYJ | 49-882 | 49-281 |
| WYJ-313-1 | K20-WYJ | D20-WYJ | 49-882 | 49-281 |
| WYJ-314-1 | K20-WYJ | D20-WYJ | 49-882 | 49-281 |
| WYJ-315-1 | K20-WYJ | D20-WYJ | 49-882 | 49-281 |
| WYJ-316-1 | K20-WYJ | D20-WYJ | 49-882 | 49-281 |
| WYJ-317-1 | K20-WYJ | D20-WYJ | 49-882 | 49-281 |
| WYJ-318-1 | K20-WYJ | D20-WYJ | 49-882 | 49-281 |
| WYJ-319-1 | K20-WYJ | D20-WYJ | 49-882 | 49-281 |
| WYJ-320-1 | K20-WYJ | D20-WYJ | 49-882 | 49-281 |
| WYJ-32-1 | K20-WYJ | D20-WYJ | 49-882 | 49-281 |
| WYJ-322-1 | K20-WYJ | D20-WYJ | 49-882 | 49-281 |
| WYJ-323-1 | K20-WYJ | D20-WYJ | 49-882 | 49-281 |
| WYJ-324-1 | K20-WYJ | D20-WYJ | 49-882 | 49-281 |
| WYJ-325-1 | K20-WYJ | D20-WYJ | 49-882 | 49-281 |
| WYJ-326-1 | K20-WYJ | D20-WYJ | 49-882 | 49-281 |
| WYJ-327-1 | K20-WYJ | D20-WYJ | 49-882 | 49-281 |
| WYJ-328-1 | K20-WYJ | D20-WYJ | 49-882 | 49-281 |
| WYJ-329-1 | K20-WYJ | D20-WYJ | 49-882 | 49-281 |
| WYJ-330-1 | K20-WYJ | D20-WYJ | 49-882 | 49-281 |
| WYJ-33-1 | K20-WYJ | D20-WYJ | 49-882 | 49-281 |
| WYJ-331-1 | K20-WYJ | D20-WYJ | 49-882 | 49-281 |
| WYJ-335-1 | K20-WYJ | D20-WYJ | 49-882 | 49-281 |
| WYJ-336-1 | K20-WYJ | D20-WYJ | 49-882 | 49-281 |
| WYJ-337-1 | K20-WYJ | D20-WYJ | 49-882 | 49-281 |

# Carburetor Kit Reference

| OEM CARBURETOR | | | OREGON | |
|---|---|---|---|---|
| Model | Kit | Gaskets | Kit | Gaskets |
| **Walbro** | | | | |
| WYJ-338-1 | K20-WYJ | D20-WYJ | 49-882 | 49-281 |
| WYJ-339-1 | K20-WYJ | D20-WYJ | 49-882 | 49-281 |
| WYJ-340-1 | K20-WYJ | D20-WYJ | 49-882 | 49-281 |
| WYJ-34-1 | K20-WYJ | D20-WYJ | 49-882 | 49-281 |
| WYJ-341-1 | K20-WYJ | D20-WYJ | 49-882 | 49-281 |
| WYJ-342-1 | K20-WYJ | D20-WYJ | 49-882 | 49-281 |
| WYJ-343-1 | K20-WYJ | D20-WYJ | 49-882 | 49-281 |
| WYJ-344-1 | K20-WYJ | D20-WYJ | 49-882 | 49-281 |
| WYJ-345-1 | K20-WYJ | D20-WYJ | 49-882 | 49-281 |
| WYJ-349-1 | K20-WYJ | D20-WYJ | 49-882 | 49-281 |
| WYJ-350-1 | K20-WYJ | D20-WYJ | 49-882 | 49-281 |
| WYJ-35-1 | K20-WYJ | D20-WYJ | 49-882 | 49-281 |
| WYJ-352-1 | K20-WYJ | D20-WYJ | 49-882 | 49-281 |
| WYJ-353-1 | K20-WYJ | D20-WYJ | 49-882 | 49-281 |
| WYJ-355-1 | K20-WYJ | D20-WYJ | 49-882 | 49-281 |
| WYJ-356-1 | K20-WYJ | D20-WYJ | 49-882 | 49-281 |
| WYJ-357-1 | K20-WYJ | D20-WYJ | 49-882 | 49-281 |
| WYJ-358-1 | K20-WYJ | D20-WYJ | 49-882 | 49-281 |
| WYJ-360-1 | K20-WYJ | D20-WYJ | 49-882 | 49-281 |
| WYJ-36-1 | K20-WYJ | D20-WYJ | 49-882 | 49-281 |
| WYJ-362-1 | K20-WYJ | D20-WYJ | 49-882 | 49-281 |
| WYJ-363-1 | K20-WYJ | D20-WYJ | 49-882 | 49-281 |
| WYJ-364-1 | K20-WYJ | D20-WYJ | 49-882 | 49-281 |
| WYJ-365-1 | K20-WYJ | D20-WYJ | 49-882 | 49-281 |
| WYJ-366-1 | K20-WYJ | D20-WYJ | 49-882 | 49-281 |
| WYJ-368-1 | K20-WYJ | D20-WYJ | 49-882 | 49-281 |
| WYJ-369-1 | K20-WYJ | D20-WYJ | 49-882 | 49-281 |
| WYJ-370-1 | K20-WYJ | D20-WYJ | 49-882 | 49-281 |
| WYJ-37-1 | K20-WYJ | D20-WYJ | 49-882 | 49-281 |
| WYJ-371-1 | K20-WYJ | D20-WYJ | 49-882 | 49-281 |
| WYJ-373-1 | K20-WYJ | D20-WYJ | 49-882 | 49-281 |
| WYJ-374-1 | K20-WYJ | D20-WYJ | 49-882 | 49-281 |
| WYJ-376-1 | K20-WYJ | D20-WYJ | 49-882 | 49-281 |
| WYJ-377-1 | K20-WYJ | D20-WYJ | 49-882 | 49-281 |
| WYJ-378-1 | K20-WYJ | D20-WYJ | 49-882 | 49-281 |
| WYJ-379-1 | K20-WYJ | D20-WYJ | 49-882 | 49-281 |
| WYJ-38-1 | K20-WYJ | D20-WYJ | 49-882 | 49-281 |
| WYJ-381-1 | K20-WYJ | D20-WYJ | 49-882 | 49-281 |
| WYJ-382-1 | K20-WYJ | D20-WYJ | 49-882 | 49-281 |
| WYJ-383-1 | K20-WYJ | D20-WYJ | 49-882 | 49-281 |
| WYJ-384-1 | K20-WYJ | D20-WYJ | 49-882 | 49-281 |
| WYJ-385-1 | K20-WYJ | D20-WYJ | 49-882 | 49-281 |
| WYJ-386-1 | K20-WYJ | D20-WYJ | 49-882 | 49-281 |
| WYJ-387-1 | K20-WYJ | D20-WYJ | 49-882 | 49-281 |
| WYJ-388-1 | K20-WYJ | D20-WYJ | 49-882 | 49-281 |
| WYJ-389-1 | K20-WYJ | D20-WYJ | 49-882 | 49-281 |
| WYJ-390-1 | K20-WYJ | D20-WYJ | 49-882 | 49-281 |
| WYJ-39-1 | K20-WYJ | D20-WYJ | 49-882 | 49-281 |
| WYJ-391-1 | K20-WYJ | D20-WYJ | 49-882 | 49-281 |
| WYJ-392-1 | K20-WYJ | D20-WYJ | 49-882 | 49-281 |
| WYJ-393-1 | K20-WYJ | D20-WYJ | 49-882 | 49-281 |
| WYJ-394-1 | K20-WYJ | D20-WYJ | 49-882 | 49-281 |
| WYJ-395-1 | K20-WYJ | D20-WYJ | 49-882 | 49-281 |
| WYJ-396-1 | K20-WYJ | D20-WYJ | 49-882 | 49-281 |
| WYJ-397-1 | K20-WYJ | D20-WYJ | 49-882 | 49-281 |
| WYJ-398-1 | K20-WYJ | D20-WYJ | 49-882 | 49-281 |
| WYJ-399-1 | K20-WYJ | D20-WYJ | 49-882 | 49-281 |
| WYJ-400-1 | K20-WYJ | D20-WYJ | 49-882 | 49-281 |
| WYJ-40-1 | K20-WYJ | D20-WYJ | 49-882 | 49-281 |
| WYJ-401-1 | K20-WYJ | D20-WYJ | 49-882 | 49-281 |
| WYJ-402-1 | K20-WYJ | D20-WYJ | 49-882 | 49-281 |
| WYJ-403-1 | K20-WYJ | D20-WYJ | 49-882 | 49-281 |
| WYJ-404-1 | K20-WYJ | D20-WYJ | 49-882 | 49-281 |
| WYJ-405-1 | K20-WYJ | D20-WYJ | 49-882 | 49-281 |
| WYJ-406-1 | K20-WYJ | D20-WYJ | 49-882 | 49-281 |
| WYJ-407-1 | K20-WYJ | D20-WYJ | 49-882 | 49-281 |
| WYJ-408-1 | K20-WYJ | D20-WYJ | 49-882 | 49-281 |
| WYJ-409-1 | K20-WYJ | D20-WYJ | 49-882 | 49-281 |
| WYJ-4-1 | K20-WYJ | D20-WYJ | 49-882 | 49-281 |
| WYJ-410-1 | K20-WYJ | D20-WYJ | 49-882 | 49-281 |
| WYJ-41-1 | K20-WYJ | D20-WYJ | 49-882 | 49-281 |
| WYJ-411-1 | K20-WYJ | D20-WYJ | 49-882 | 49-281 |
| WYJ-412-1 | K20-WYJ | D20-WYJ | 49-882 | 49-281 |
| WYJ-413-1 | K20-WYJ | D20-WYJ | 49-882 | 49-281 |
| WYJ-414-1 | K20-WYJ | D20-WYJ | 49-882 | 49-281 |
| WYJ-415-1 | K20-WYJ | D20-WYJ | 49-882 | 49-281 |
| WYJ-416-1 | K20-WYJ | D20-WYJ | 49-882 | 49-281 |
| WYJ-417-1 | K20-WYJ | D20-WYJ | 49-882 | 49-281 |

| OEM CARBURETOR | | | OREGON | |
|---|---|---|---|---|
| Model | Kit | Gaskets | Kit | Gaskets |
| **Walbro** | | | | |
| WYJ-418-1 | K20-WYJ | D20-WYJ | 49-882 | 49-281 |
| WYJ-419-1 | K20-WYJ | D20-WYJ | 49-882 | 49-281 |
| WYJ-420-1 | K20-WYJ | D20-WYJ | 49-882 | 49-281 |
| WYJ-42-1 | K20-WYJ | D20-WYJ | 49-882 | 49-281 |
| WYJ-421-1 | K20-WYJ | D20-WYJ | 49-882 | 49-281 |
| WYJ-424-1 | K20-WYJ | D20-WYJ | 49-882 | 49-281 |
| WYJ-425-1 | K20-WYJ | D20-WYJ | 49-882 | 49-281 |
| WYJ-426-1 | K20-WYJ | D20-WYJ | 49-882 | 49-281 |
| WYJ-428-1 | K20-WYJ | D20-WYJ | 49-882 | 49-281 |
| WYJ-43-1 | K20-WYJ | D20-WYJ | 49-882 | 49-281 |
| WYJ-431-1 | K20-WYJ | D20-WYJ | 49-882 | 49-281 |
| WYJ-434-1 | K20-WYJ | D20-WYJ | 49-882 | 49-281 |
| WYJ-435-1 | K20-WYJ | D20-WYJ | 49-882 | 49-281 |
| WYJ-436-1 | K20-WYJ | D20-WYJ | 49-882 | 49-281 |
| WYJ-438-1 | K20-WYJ | D20-WYJ | 49-882 | 49-281 |
| WYJ-440-1 | K20-WYJ | D20-WYJ | 49-882 | 49-281 |
| WYJ-44-1 | K20-WYJ | D20-WYJ | 49-882 | 49-281 |
| WYJ-441-1 | K20-WYJ | D20-WYJ | 49-882 | 49-281 |
| WYJ-442-1 | K20-WYJ | D20-WYJ | 49-882 | 49-281 |
| WYJ-447-1 | K20-WYJ | D20-WYJ | 49-882 | 49-281 |
| WYJ-450-1 | K20-WYJ | D20-WYJ | 49-882 | 49-281 |
| WYJ-45-1 | K20-WYJ | D20-WYJ | 49-882 | 49-281 |
| WYJ-451-1 | K20-WYJ | D20-WYJ | 49-882 | 49-281 |
| WYJ-454-1 | K20-WYJ | D20-WYJ | 49-882 | 49-281 |
| WYJ-455-1 | K20-WYJ | D20-WYJ | 49-882 | 49-281 |
| WYJ-456-1 | K20-WYJ | D20-WYJ | 49-882 | 49-281 |
| WYJ-457-1 | K20-WYJ | D20-WYJ | 49-882 | 49-281 |
| WYJ-458-1 | K20-WYJ | D20-WYJ | 49-882 | 49-281 |
| WYJ-460-1 | K20-WYJ | D20-WYJ | 49-882 | 49-281 |
| WYJ-46-1 | K20-WYJ | D20-WYJ | 49-882 | 49-281 |
| WYJ-461-1 | K20-WYJ | D20-WYJ | 49-882 | 49-281 |
| WYJ-462-1 | K20-WYJ | D20-WYJ | 49-882 | 49-281 |
| WYJ-463-1 | K20-WYJ | D20-WYJ | 49-882 | 49-281 |
| WYJ-464-1 | K20-WYJ | D20-WYJ | 49-882 | 49-281 |
| WYJ-466-1 | K20-WYJ | D20-WYJ | 49-882 | 49-281 |
| WYJ-470-1 | K20-WYJ | D20-WYJ | 49-882 | 49-281 |
| WYJ-47-1 | K20-WYJ | D20-WYJ | 49-882 | 49-281 |
| WYJ-471-1 | K20-WYJ | D20-WYJ | 49-882 | 49-281 |
| WYJ-473-1 | K20-WYJ | D20-WYJ | 49-882 | 49-281 |
| WYJ-475-1 | K20-WYJ | D20-WYJ | 49-882 | 49-281 |
| WYJ-476-1 | K20-WYJ | D20-WYJ | 49-882 | 49-281 |
| WYJ-477-1 | K20-WYJ | D20-WYJ | 49-882 | 49-281 |
| WYJ-478-1 | K20-WYJ | D20-WYJ | 49-882 | 49-281 |
| WYJ-48-1 | K20-WYJ | D20-WYJ | 49-882 | 49-281 |
| WYJ-488-1 | K20-WYJ | D20-WYJ | 49-882 | 49-281 |
| WYJ-49-1 | K20-WYJ | D20-WYJ | 49-882 | 49-281 |
| WYJ-50-1 | K20-WYJ | D20-WYJ | 49-882 | 49-281 |
| WYJ-502-1 | K20-WYJ | D20-WYJ | 49-882 | 49-281 |
| WYJ-503-1 | K20-WYJ | D20-WYJ | 49-882 | 49-281 |
| WYJ-508-1 | K20-WYJ | D20-WYJ | 49-882 | 49-281 |
| WYJ-5-1 | K20-WYJ | D20-WYJ | 49-882 | 49-281 |
| WYJ-51-1 | K20-WYJ | D20-WYJ | 49-882 | 49-281 |
| WYJ-52-1 | K20-WYJ | D20-WYJ | 49-882 | 49-281 |
| WYJ-53-1 | K20-WYJ | D20-WYJ | 49-882 | 49-281 |
| WYJ-54-1 | K20-WYJ | D20-WYJ | 49-882 | 49-281 |
| WYJ-55-1 | K20-WYJ | D20-WYJ | 49-882 | 49-281 |
| WYJ-56-1 | K20-WYJ | D20-WYJ | 49-882 | 49-281 |
| WYJ-57-1 | K20-WYJ | D20-WYJ | 49-882 | 49-281 |
| WYJ-58-1 | K20-WYJ | D20-WYJ | 49-882 | 49-281 |
| WYJ-59-1 | K20-WYJ | D20-WYJ | 49-882 | 49-281 |
| WYJ-60-1 | K20-WYJ | D20-WYJ | 49-882 | 49-281 |
| WYJ-6-1 | K20-WYJ | D20-WYJ | 49-882 | 49-281 |
| WYJ-61-1 | K20-WYJ | D20-WYJ | 49-882 | 49-281 |
| WYJ-62-1 | K20-WYJ | D20-WYJ | 49-882 | 49-281 |
| WYJ-63-1 | K20-WYJ | D20-WYJ | 49-882 | 49-281 |
| WYJ-64-1 | K20-WYJ | D20-WYJ | 49-882 | 49-281 |
| WYJ-65-1 | K20-WYJ | D20-WYJ | 49-882 | 49-281 |
| WYJ-66-1 | K20-WYJ | D20-WYJ | 49-882 | 49-281 |
| WYJ-67-1 | K20-WYJ | D20-WYJ | 49-882 | 49-281 |
| WYJ-68-1 | K20-WYJ | D20-WYJ | 49-882 | 49-281 |
| WYJ-69-1 | K20-WYJ | D20-WYJ | 49-882 | 49-281 |
| WYJ-70-1 | K20-WYJ | D20-WYJ | 49-882 | 49-281 |
| WYJ-7-1 | K20-WYJ | D20-WYJ | 49-882 | 49-281 |
| WYJ-71-1 | K20-WYJ | D20-WYJ | 49-882 | 49-281 |
| WYJ-72-1 | K20-WYJ | D20-WYJ | 49-882 | 49-281 |
| WYJ-73-1 | K20-WYJ | D20-WYJ | 49-882 | 49-281 |
| WYJ-74-1 | K20-WYJ | D20-WYJ | 49-882 | 49-281 |
| WYJ-75-1 | K20-WYJ | D20-WYJ | 49-882 | 49-281 |

| OEM CARBURETOR | | | OREGON | |
|---|---|---|---|---|
| Model | Kit | Gaskets | Kit | Gaskets |
| **Walbro** | | | | |
| WYJ-76-1 | K20-WYJ | D20-WYJ | 49-882 | 49-281 |
| WYJ-77-1 | K20-WYJ | D20-WYJ | 49-882 | 49-281 |
| WYJ-78-1 | K20-WYJ | D20-WYJ | 49-882 | 49-281 |
| WYJ-79-1 | K20-WYJ | D20-WYJ | 49-882 | 49-281 |
| WYJ-80-1 | K20-WYJ | D20-WYJ | 49-882 | 49-281 |
| WYJ-8-1 | K20-WYJ | D20-WYJ | 49-882 | 49-281 |
| WYJ-81-1 | K20-WYJ | D20-WYJ | 49-882 | 49-281 |
| WYJ-82-1 | K20-WYJ | D20-WYJ | 49-882 | 49-281 |
| WYJ-83-1 | K20-WYJ | D20-WYJ | 49-882 | 49-281 |
| WYJ-84-1 | K20-WYJ | D20-WYJ | 49-882 | 49-281 |
| WYJ-86-1 | K20-WYJ | D20-WYJ | 49-882 | 49-281 |
| WYJ-88-1 | K20-WYJ | D20-WYJ | 49-882 | 49-281 |
| WYJ-89-1 | K20-WYJ | D20-WYJ | 49-882 | 49-281 |
| WYJ-9-1 | K20-WYJ | D20-WYJ | 49-882 | 49-281 |
| WYJ-91-1 | K20-WYJ | D20-WYJ | 49-882 | 49-281 |
| WYJ-92-1 | K20-WYJ | D20-WYJ | 49-882 | 49-281 |
| WYJ-93-1 | K20-WYJ | D20-WYJ | 49-882 | 49-281 |
| WYJ-94-1 | K20-WYJ | D20-WYJ | 49-882 | 49-281 |
| WYJ-96-1 | K20-WYJ | D20-WYJ | 49-882 | 49-281 |
| WYJ-97-1 | K20-WYJ | D20-WYJ | 49-882 | 49-281 |
| WYJ-98-1 | K20-WYJ | D20-WYJ | 49-882 | 49-281 |
| WYJ-99-1 | K20-WYJ | D20-WYJ | 49-882 | 49-281 |
| WYL-100-1 | K20-WYL | D11-WYL | 49-316 | 49-317 |
| WYL-10-1 | K20-WYL | D11-WYL | 49-316 | 49-317 |
| WYL-101-1 | K20-WYL | D11-WYL | 49-316 | 49-317 |
| WYL-102-1 | K20-WYL | D11-WYL | 49-316 | 49-317 |
| WYL-103-1 | K20-WYL | D11-WYL | 49-316 | 49-317 |
| WYL-104-1 | K20-WYL | D11-WYL | 49-316 | 49-317 |
| WYL-105-1 | K20-WYL | D11-WYL | 49-316 | 49-317 |
| WYL-106-1 | K20-WYL | D11-WYL | 49-316 | 49-317 |
| WYL-107-1 | K20-WYL | D11-WYL | 49-316 | 49-317 |
| WYL-108-1 | K20-WYL | D11-WYL | 49-316 | 49-317 |
| WYL-109-1 | K20-WYL | D11-WYL | 49-316 | 49-317 |
| WYL-1-1 | K20-WYL | D11-WYL | 49-316 | 49-317 |
| WYL-110-1 | K20-WYL | D11-WYL | 49-316 | 49-317 |
| WYL-11-1 | K20-WYL | D11-WYL | 49-316 | 49-317 |
| WYL-111-1 | K20-WYL | D11-WYL | 49-316 | 49-317 |
| WYL-112-1 | K20-WYL | D11-WYL | 49-316 | 49-317 |
| WYL-113-1 | K20-WYL | D11-WYL | 49-316 | 49-317 |
| WYL-115-1 | K20-WYL | D11-WYL | 49-316 | 49-317 |
| WYL-116-1 | K20-WYL | D11-WYL | 49-316 | 49-317 |
| WYL-117-1 | K20-WYL | D11-WYL | 49-316 | 49-317 |
| WYL-118-1 | K20-WYL | D11-WYL | 49-316 | 49-317 |
| WYL-119-1 | K20-WYL | D11-WYL | 49-316 | 49-317 |
| WYL-120-1 | K20-WYL | D11-WYL | 49-316 | 49-317 |
| WYL-12-1 | K20-WYL | D11-WYL | 49-316 | 49-317 |
| WYL-121-1 | K20-WYL | D11-WYL | 49-316 | 49-317 |
| WYL-122-1 | K20-WYL | D11-WYL | 49-316 | 49-317 |
| WYL-123-1 | K20-WYL | D11-WYL | 49-316 | 49-317 |
| WYL-124-1 | K20-WYL | D11-WYL | 49-316 | 49-317 |
| WYL-125-1 | K20-WYL | D11-WYL | 49-316 | 49-317 |
| WYL-126-1 | K20-WYL | D11-WYL | 49-316 | 49-317 |
| WYL-127-1 | K20-WYL | D11-WYL | 49-316 | 49-317 |
| WYL-128-1 | K20-WYL | D11-WYL | 49-316 | 49-317 |
| WYL-129-1 | K20-WYL | D11-WYL | 49-316 | 49-317 |
| WYL-130-1 | K20-WYL | D11-WYL | 49-316 | 49-317 |
| WYL-13-1 | K20-WYL | D11-WYL | 49-316 | 49-317 |
| WYL-131-1 | K20-WYL | D11-WYL | 49-316 | 49-317 |
| WYL-132-1 | K20-WYL | D11-WYL | 49-316 | 49-317 |
| WYL-133-1 | K20-WYL | D11-WYL | 49-316 | 49-317 |
| WYL-134-1 | K20-WYL | D11-WYL | 49-316 | 49-317 |
| WYL-135-1 | K20-WYL | D11-WYL | 49-316 | 49-317 |
| WYL-137-1 | K20-WYL | D11-WYL | 49-316 | 49-317 |
| WYL-138-1 | K20-WYL | D11-WYL | 49-316 | 49-317 |
| WYL-139-1 | K20-WYL | D11-WYL | 49-316 | 49-317 |
| WYL-140-1 | K20-WYL | D11-WYL | 49-316 | 49-317 |
| WYL-14-1 | K20-WYL | D11-WYL | 49-316 | 49-317 |
| WYL-141-1 | K20-WYL | D11-WYL | 49-316 | 49-317 |
| WYL-142-1 | K20-WYL | D11-WYL | 49-316 | 49-317 |
| WYL-143-1 | K20-WYL | D11-WYL | 49-316 | 49-317 |
| WYL-144-1 | K20-WYL | D11-WYL | 49-316 | 49-317 |
| WYL-145-1 | K20-WYL | D11-WYL | 49-316 | 49-317 |
| WYL-146-1 | K20-WYL | D11-WYL | 49-316 | 49-317 |
| WYL-147-1 | K20-WYL | D11-WYL | 49-316 | 49-317 |
| WYL-148-1 | K20-WYL | D11-WYL | 49-316 | 49-317 |
| WYL-149-1 | K20-WYL | D11-WYL | 49-316 | 49-317 |
| WYL-150-1 | K20-WYL | D11-WYL | 49-316 | 49-317 |
| WYL-15-1 | K20-WYL | D11-WYL | 49-316 | 49-317 |

C

| OEM CARBURETOR | | | OREGON | |
|---|---|---|---|---|
| Model | Kit | Gaskets | Kit | Gaskets |
| **Walbro** | | | | |
| WYL-152-1 | K20-WYL | D11-WYL | 49-316 | 49-317 |
| WYL-153-1 | K20-WYL | D11-WYL | 49-316 | 49-317 |
| WYL-154-1 | K20-WYL | D11-WYL | 49-316 | 49-317 |
| WYL-155-1 | K20-WYL | D11-WYL | 49-316 | 49-317 |
| WYL-156-1 | K20-WYL | D11-WYL | 49-316 | 49-317 |
| WYL-157-1 | K20-WYL | D11-WYL | 49-316 | 49-317 |
| WYL-158-1 | K20-WYL | D11-WYL | 49-316 | 49-317 |
| WYL-159-1 | K20-WYL | D11-WYL | 49-316 | 49-317 |
| WYL-160-1 | K20-WYL | D11-WYL | 49-316 | 49-317 |
| WYL-16-1 | K20-WYL | D11-WYL | 49-316 | 49-317 |
| WYL-161-1 | K20-WYL | D11-WYL | 49-316 | 49-317 |
| WYL-162-1 | K20-WYL | D11-WYL | 49-316 | 49-317 |
| WYL-163-1 | K20-WYL | D11-WYL | 49-316 | 49-317 |
| WYL-164-1 | K20-WYL | D11-WYL | 49-316 | 49-317 |
| WYL-165-1 | K20-WYL | D11-WYL | 49-316 | 49-317 |
| WYL-166-1 | K20-WYL | D11-WYL | 49-316 | 49-317 |
| WYL-167-1 | K20-WYL | D11-WYL | 49-316 | 49-317 |
| WYL-168-1 | K20-WYL | D11-WYL | 49-316 | 49-317 |
| WYL-169-1 | K20-WYL | D11-WYL | 49-316 | 49-317 |
| WYL-170-1 | K20-WYL | D11-WYL | 49-316 | 49-317 |
| WYL-17-1 | K20-WYL | D11-WYL | 49-316 | 49-317 |
| WYL-171-1 | K20-WYL | D11-WYL | 49-316 | 49-317 |
| WYL-172 | K20-WYL | D11-WYL | 49-316 | 49-317 |
| WYL-173-1 | K20-WYL | D11-WYL | 49-316 | 49-317 |
| WYL-174-1 | K20-WYL | D11-WYL | 49-316 | 49-317 |
| WYL-175-1 | K20-WYL | D11-WYL | 49-316 | 49-317 |
| WYL-176-1 | K20-WYL | D11-WYL | 49-316 | 49-317 |
| WYL-177-1 | K20-WYL | D11-WYL | 49-316 | 49-317 |
| WYL-178-1 | K20-WYL | D11-WYL | 49-316 | 49-317 |
| WYL-180-1 | K20-WYL | D11-WYL | 49-316 | 49-317 |
| WYL-18-1 | K20-WYL | D11-WYL | 49-316 | 49-317 |
| WYL-181-1 | K20-WYL | D11-WYL | 49-316 | 49-317 |
| WYL-182-1 | K20-WYL | D11-WYL | 49-316 | 49-317 |
| WYL-183-1 | K20-WYL | D11-WYL | 49-316 | 49-317 |
| WYL-184-1 | K20-WYL | D11-WYL | 49-316 | 49-317 |
| WYL-185-1 | K20-WYL | D11-WYL | 49-316 | 49-317 |
| WYL-186-1 | K20-WYL | D11-WYL | 49-316 | 49-317 |
| WYL-187-1 | K20-WYL | D11-WYL | 49-316 | 49-317 |
| WYL-188-1 | K20-WYL | D11-WYL | 49-316 | 49-317 |
| WYL-190-1 | K20-WYL | D11-WYL | 49-316 | 49-317 |
| WYL-19-1 | K20-WYL | D11-WYL | 49-316 | 49-317 |
| WYL-191-1 | K20-WYL | D11-WYL | 49-316 | 49-317 |
| WYL-192-1 | K20-WYL | D11-WYL | 49-316 | 49-317 |
| WYL-196-1 | K20-WYL | D11-WYL | 49-316 | 49-317 |
| WYL-197-1 | K20-WYL | D11-WYL | 49-316 | 49-317 |
| WYL-198-1 | K20-WYL | D11-WYL | 49-316 | 49-317 |
| WYL-199-1 | K20-WYL | D11-WYL | 49-316 | 49-317 |
| WYL-200-1 | K20-WYL | D11-WYL | 49-316 | 49-317 |
| WYL-20-1 | K20-WYL | D11-WYL | 49-316 | 49-317 |
| WYL-201-1 | K20-WYL | D11-WYL | 49-316 | 49-317 |
| WYL-202-1 | K20-WYL | D11-WYL | 49-316 | 49-317 |
| WYL-203-1 | K20-WYL | D11-WYL | 49-316 | 49-317 |
| WYL-204-1 | K20-WYL | D11-WYL | 49-316 | 49-317 |
| WYL-205-1 | K20-WYL | D11-WYL | 49-316 | 49-317 |
| WYL-207-1 | K20-WYL | D11-WYL | 49-316 | 49-317 |
| WYL-208-1 | K20-WYL | D11-WYL | 49-316 | 49-317 |
| WYL-2-1 | K20-WYL | D11-WYL | 49-316 | 49-317 |
| WYL-210-1 | K20-WYL | D11-WYL | 49-316 | 49-317 |
| WYL-21-1 | K20-WYL | D11-WYL | 49-316 | 49-317 |
| WYL-211-1 | K20-WYL | D11-WYL | 49-316 | 49-317 |
| WYL-212-1 | K20-WYL | D11-WYL | 49-316 | 49-317 |
| WYL-213-1 | K20-WYL | D11-WYL | 49-316 | 49-317 |
| WYL-214-1 | K20-WYL | D11-WYL | 49-316 | 49-317 |
| WYL-215-1 | K20-WYL | D11-WYL | 49-316 | 49-317 |
| WYL-216-1 | K20-WYL | D11-WYL | 49-316 | 49-317 |
| WYL-217-1 | K20-WYL | D11-WYL | 49-316 | 49-317 |
| WYL-218-1 | K20-WYL | D11-WYL | 49-316 | 49-317 |
| WYL-219-1 | K20-WYL | D11-WYL | 49-316 | 49-317 |
| WYL-220-1 | K20-WYL | D11-WYL | 49-316 | 49-317 |
| WYL-221-1 | K20-WYL | D11-WYL | 49-316 | 49-317 |
| WYL-222-1 | K20-WYL | D11-WYL | 49-316 | 49-317 |
| WYL-223-1 | K20-WYL | D11-WYL | 49-316 | 49-317 |
| WYL-224-1 | K20-WYL | D11-WYL | 49-316 | 49-317 |
| WYL-225-1 | K20-WYL | D11-WYL | 49-316 | 49-317 |
| WYL-226-1 | K20-WYL | D11-WYL | 49-316 | 49-317 |
| WYL-227-1 | K20-WYL | D11-WYL | 49-316 | 49-317 |
| WYL-229-1 | K20-WYL | D11-WYL | 49-316 | 49-317 |
| WYL-230-1 | K20-WYL | D11-WYL | 49-316 | 49-317 |

| OEM CARBURETOR | | | OREGON | |
|---|---|---|---|---|
| Model | Kit | Gaskets | Kit | Gaskets |
| **Walbro** | | | | |
| WYL-23-1 | K20-WYL | D11-WYL | 49-316 | 49-317 |
| WYL-231-1 | K20-WYL | D11-WYL | 49-316 | 49-317 |
| WYL-233-1 | K20-WYL | D11-WYL | 49-316 | 49-317 |
| WYL-234-1 | K20-WYL | D11-WYL | 49-316 | 49-317 |
| WYL-235-1 | K20-WYL | D11-WYL | 49-316 | 49-317 |
| WYL-236-1 | K20-WYL | D11-WYL | 49-316 | 49-317 |
| WYL-237-1 | K20-WYL | D11-WYL | 49-316 | 49-317 |
| WYL-238-1 | K20-WYL | D11-WYL | 49-316 | 49-317 |
| WYL-239-1 | K20-WYL | D11-WYL | 49-316 | 49-317 |
| WYL-240-1 | K20-WYL | D11-WYL | 49-316 | 49-317 |
| WYL-24-1 | K20-WYL | D11-WYL | 49-316 | 49-317 |
| WYL-241-1 | K20-WYL | D11-WYL | 49-316 | 49-317 |
| WYL-242-1 | K20-WYL | D11-WYL | 49-316 | 49-317 |
| WYL-247-1 | K20-WYL | D11-WYL | 49-316 | 49-317 |
| WYL-25-1 | K20-WYL | D11-WYL | 49-316 | 49-317 |
| WYL-254-1 | K20-WYL | D11-WYL | 49-316 | 49-317 |
| WYL-255-1 | K20-WYL | D11-WYL | 49-316 | 49-317 |
| WYL-256-1 | K20-WYL | D11-WYL | 49-316 | 49-317 |
| WYL-259-1 | K20-WYL | D11-WYL | 49-316 | 49-317 |
| WYL-26-1 | K20-WYL | D11-WYL | 49-316 | 49-317 |
| WYL-261-1 | K20-WYL | D11-WYL | 49-316 | 49-317 |
| WYL-27-1 | K20-WYL | D11-WYL | 49-316 | 49-317 |
| WYL-280-1 | K20-WYL | D11-WYL | 49-316 | 49-317 |
| WYL-28-1 | K20-WYL | D11-WYL | 49-316 | 49-317 |
| WYL-283-1 | K20-WYL | D11-WYL | 49-316 | 49-317 |
| WYL-29-1 | K20-WYL | D11-WYL | 49-316 | 49-317 |
| WYL-295-1 | K20-WYL | D11-WYL | 49-316 | 49-317 |
| WYL-296-1 | K20-WYL | D11-WYL | 49-316 | 49-317 |
| WYL-297-1 | K20-WYL | D11-WYL | 49-316 | 49-317 |
| WYL-30-1 | K20-WYL | D11-WYL | 49-316 | 49-317 |
| WYL-3-1 | K20-WYL | D11-WYL | 49-316 | 49-317 |
| WYL-31-1 | K20-WYL | D11-WYL | 49-316 | 49-317 |
| WYL-32-1 | K20-WYL | D11-WYL | 49-316 | 49-317 |
| WYL-33-1 | K20-WYL | D11-WYL | 49-316 | 49-317 |
| WYL-34-1 | K20-WYL | D11-WYL | 49-316 | 49-317 |
| WYL-35-1 | K20-WYL | D11-WYL | 49-316 | 49-317 |
| WYL-36-1 | K20-WYL | D11-WYL | 49-316 | 49-317 |
| WYL-37-1 | K20-WYL | D11-WYL | 49-316 | 49-317 |
| WYL-38-1 | K20-WYL | D11-WYL | 49-316 | 49-317 |
| WYL-40-1 | K20-WYL | D11-WYL | 49-316 | 49-317 |
| WYL-4-1 | K20-WYL | D11-WYL | 49-316 | 49-317 |
| WYL-41-1 | K20-WYL | D11-WYL | 49-316 | 49-317 |
| WYL-42-1 | K20-WYL | D11-WYL | 49-316 | 49-317 |
| WYL-43-1 | K20-WYL | D11-WYL | 49-316 | 49-317 |
| WYL-44-1 | K20-WYL | D11-WYL | 49-316 | 49-317 |
| WYL-45-1 | K20-WYL | D11-WYL | 49-316 | 49-317 |
| WYL-46-1 | K20-WYL | D11-WYL | 49-316 | 49-317 |
| WYL-47-1 | K20-WYL | D11-WYL | 49-316 | 49-317 |
| WYL-48-1 | K20-WYL | D11-WYL | 49-316 | 49-317 |
| WYL-49-1 | K20-WYL | D11-WYL | 49-316 | 49-317 |
| WYL-50-1 | K20-WYL | D11-WYL | 49-316 | 49-317 |
| WYL-51-1 | K20-WYL | D11-WYL | 49-316 | 49-317 |
| WYL-52-1 | K20-WYL | D11-WYL | 49-316 | 49-317 |
| WYL-53-1 | K20-WYL | D11-WYL | 49-316 | 49-317 |
| WYL-54-1 | K20-WYL | D11-WYL | 49-316 | 49-317 |
| WYL-55-1 | K20-WYL | D11-WYL | 49-316 | 49-317 |
| WYL-56-1 | K20-WYL | D11-WYL | 49-316 | 49-317 |
| WYL-57-1 | K20-WYL | D11-WYL | 49-316 | 49-317 |
| WYL-58-1 | K20-WYL | D11-WYL | 49-316 | 49-317 |
| WYL-59-1 | K20-WYL | D11-WYL | 49-316 | 49-317 |
| WYL-60-1 | K20-WYL | D11-WYL | 49-316 | 49-317 |
| WYL-6-1 | K20-WYL | D11-WYL | 49-316 | 49-317 |
| WYL-61-1 | K20-WYL | D11-WYL | 49-316 | 49-317 |
| WYL-62-1 | K20-WYL | D11-WYL | 49-316 | 49-317 |
| WYL-63-1 | K20-WYL | D11-WYL | 49-316 | 49-317 |
| WYL-64-1 | K20-WYL | D11-WYL | 49-316 | 49-317 |
| WYL-65-1 | K20-WYL | D11-WYL | 49-316 | 49-317 |
| WYL-66-1 | K20-WYL | D11-WYL | 49-316 | 49-317 |
| WYL-67-1 | K20-WYL | D11-WYL | 49-316 | 49-317 |
| WYL-68-1 | K20-WYL | D11-WYL | 49-316 | 49-317 |
| WYL-69-1 | K20-WYL | D11-WYL | 49-316 | 49-317 |
| WYL-70-1 | K20-WYL | D11-WYL | 49-316 | 49-317 |
| WYL-7-1 | K20-WYL | D11-WYL | 49-316 | 49-317 |
| WYL-71-1 | K20-WYL | D11-WYL | 49-316 | 49-317 |
| WYL-72-1 | K20-WYL | D11-WYL | 49-316 | 49-317 |
| WYL-73-1 | K20-WYL | D11-WYL | 49-316 | 49-317 |
| WYL-74-1 | K20-WYL | D11-WYL | 49-316 | 49-317 |
| WYL-75-1 | K20-WYL | D11-WYL | 49-316 | 49-317 |

| OEM CARBURETOR | | | OREGON | |
|---|---|---|---|---|
| Model | Kit | Gaskets | Kit | Gaskets |
| **Walbro** | | | | |
| WYL-76-1 | K20-WYL | D11-WYL | 49-316 | 49-317 |
| WYL-77-1 | K20-WYL | D11-WYL | 49-316 | 49-317 |
| WYL-78-1 | K20-WYL | D11-WYL | 49-316 | 49-317 |
| WYL-79-1 | K20-WYL | D11-WYL | 49-316 | 49-317 |
| WYL-80-1 | K20-WYL | D11-WYL | 49-316 | 49-317 |
| WYL-8-1 | K20-WYL | D11-WYL | 49-316 | 49-317 |
| WYL-81-1 | K20-WYL | D11-WYL | 49-316 | 49-317 |
| WYL-82-1 | K20-WYL | D11-WYL | 49-316 | 49-317 |
| WYL-83-1 | K20-WYL | D11-WYL | 49-316 | 49-317 |
| WYL-84-1 | K20-WYL | D11-WYL | 49-316 | 49-317 |
| WYL-85-1 | K20-WYL | D11-WYL | 49-316 | 49-317 |
| WYL-87-1 | K20-WYL | D11-WYL | 49-316 | 49-317 |
| WYL-88-1 | K20-WYL | D11-WYL | 49-316 | 49-317 |
| WYL-90-1 | K20-WYL | D11-WYL | 49-316 | 49-317 |
| WYL-9-1 | K20-WYL | D11-WYL | 49-316 | 49-317 |
| WYL-91-1 | K20-WYL | D11-WYL | 49-316 | 49-317 |
| WYL-92-1 | K20-WYL | D11-WYL | 49-316 | 49-317 |
| WYL-93-1 | K20-WYL | D11-WYL | 49-316 | 49-317 |
| WYL-94-1 | K20-WYL | D11-WYL | 49-316 | 49-317 |
| WYL-95-1 | K20-WYL | D11-WYL | 49-316 | 49-317 |
| WYL-96-1 | K20-WYL | D11-WYL | 49-316 | 49-317 |
| WYL-97-1 | K20-WYL | D11-WYL | 49-316 | 49-317 |
| WYL-98-1 | K20-WYL | D11-WYL | 49-316 | 49-317 |
| WYL-99-1 | K20-WYL | D11-WYL | 49-316 | 49-317 |
| **Zama** | | | | |
| C1-M2B | RB-01 | GND-01 | 49-861 | 49-854 |
| C1M-EL28,A | RB-130 | GND-71 | | |
| C1M-EL35 | RB-144 | GND-80 | | |
| C1M-EL37,A-B | RB-145 | GND-81 | | |
| C1M-EL40A-B | RB-154 | GND-87 | | |
| C1M-FR1,A-B | RB-70 | GND-43 | | |
| C1M-H57 | RB-57 | GND-43 | | |
| C1M-H58,A-B | RB-57 | GND-43 | | |
| C1M-H58C-D | RB-127 | GND-43 | | |
| C1M-H65 | RB-159 | GND-90 | | |
| C1M-K24,A-B | RB-44 | GND-31 | 49-903 | |
| C1M-K25,A-B | RB-44 | GND-31 | 49-903 | |
| C1M-K37,A-D | RB-61 | GND-31 | 49-906 | |
| C1M-K49,A-C | RB-44 | GND-31 | 49-903 | |
| C1M-K76 | RB-44 | GND-31 | 49-903 | |
| C1M-K77 | RB-124 | GND-67 | | |
| C1M-S141A-D | RB-155 | GND-88 | | 49-323 |
| C1M-S142A-D | RB-155 | GND-88 | | 49-323 |
| C1M-S144,A-B | RB-164 | GND-88 | 49-318 | 49-323 |
| C1M-S145A-B | RB-155 | GND-88 | | 49-323 |
| C1M-S146A-B | RB-155 | GND-88 | | 49-323 |
| C1M-S151,A-B | RB-155 | GND-88 | | 49-323 |
| C1M-W26,A-C | RB-129 | GND-70 | 49-277 | |
| C1M-W44 | RB-168 | GND-97 | | |
| C1Q-120001B | | GND-35 | | 49-924 |
| C1Q-120002B | | GND-35 | | 49-924 |
| C1Q-CP1 | | GND-27 | | 49-921 |
| C1Q-DM1 | RB-72 | GND-35 | | |
| C1Q-DM1 | | GND-35 | | 49-924 |
| C1Q-DM10 | | GND-35 | | 49-924 |
| C1Q-DM10A | | GND-35 | | 49-924 |
| C1Q-DM10A-B | RB-72 | GND-35 | | |
| C1Q-DM10B | | GND-35 | | 49-924 |
| C1Q-DM13 | | GND-27 | | 49-921 |
| C1Q-DM13,A-B | RB-119 | GND-27 | | |
| C1Q-DM13A | | GND-27 | | 49-921 |
| C1Q-DM13B | | GND-27 | | 49-921 |
| C1Q-DM14 | | GND-27 | | 49-921 |
| C1Q-DM14,A | RB-119 | GND-27 | | |
| C1Q-DM14A | | GND-27 | | 49-921 |
| C1Q-DM15 | | GND-35 | | 49-924 |
| C1Q-DM15A | | GND-35 | | 49-924 |
| C1Q-DM16 | | GND-35 | | 49-924 |
| C1Q-DM6 | | GND-35 | | 49-924 |
| C1Q-DM6,A | RB-72 | GND-35 | | |
| C1Q-DM6A | | GND-35 | | 49-924 |
| C1Q-DM7 | | GND-35 | | 49-924 |
| C1Q-DM7,A | RB-72 | GND-35 | | |
| C1Q-DM7A | | GND-35 | | 49-924 |
| C1Q-DM8 | | GND-35 | | 49-924 |
| C1Q-DM8,A-B | RB-72 | GND-35 | | |

C

# Carburetor Kit Reference

| OEM CARBURETOR | | | OREGON | |
|---|---|---|---|---|
| Model | Kit | Gaskets | Kit | Gaskets |
| **Zama** | | | | |
| C1Q-DM8A | | GND-35 | | 49-924 |
| C1Q-DM8B | | GND-35 | | 49-924 |
| C1Q-DM9 | | GND-35 | | 49-924 |
| C1Q-DM9,A-B | RB-72 | GND-35 | | |
| C1Q-DM9A | | GND-35 | | 49-924 |
| C1Q-DM9B | | GND-35 | | 49-924 |
| C1Q-E10 | RB-76 | GND-41 | | |
| C1Q-E12 | RB-76 | GND-41 | | |
| C1Q-E3 | RB-47 | GND-18 | 49-272 | |
| C1Q-E4 | RB-47 | GND-18 | 49-272 | |
| C1Q-E5 | RB-55 | GND-39 | | |
| C1Q-E5A | RB-54 | GND-27 | | |
| C1Q-E5A | | GND-27 | | 49-921 |
| C1Q-E5B | RB-74 | GND-27 | | |
| C1Q-E5B | | GND-27 | | 49-921 |
| C1Q-E6,A | RB-47 | GND-18 | 49-272 | |
| C1Q-E7,A | RB-76 | GND-41 | | |
| C1Q-EL1 | RB-45 | GND-33 | 49-438 | 49-884 |
| C1Q-EL10 | RB-45 | GND-33 | 49-438 | 49-884 |
| C1Q-EL11,A-B | RB-69 | GND-39 | 49-904 | |
| C1Q-EL12 | RB-69 | GND-39 | 49-904 | |
| C1Q-EL13 | RB-69 | GND-39 | 49-904 | |
| C1Q-EL14,A | RB-69 | GND-39 | 49-904 | |
| C1Q-EL19A-C | RB-108 | GND-39 | | |
| C1Q-EL20A-C | RB-109 | GND-59 | | |
| C1Q-EL21 | | GND-35 | | 49-924 |
| C1Q-EL21,A | RB-41 | GND-35 | 49-898 | |
| C1Q-EL21A | | GND-35 | | 49-924 |
| C1Q-EL22 | | GND-35 | | 49-924 |
| C1Q-EL22,A | RB-41 | GND-35 | 49-898 | |
| C1Q-EL22A | | GND-35 | | 49-924 |
| C1Q-EL23 | | GND-35 | | 49-924 |
| C1Q-EL23,A | RB-41 | GND-35 | 49-898 | |
| C1Q-EL23A | | GND-35 | | 49-924 |
| C1Q-EL24,A | RB-69 | GND-39 | 49-904 | |
| C1Q-EL25,A | RB-69 | GND-39 | 49-904 | |
| C1Q-EL26,A | RB-69 | GND-39 | 49-904 | |
| C1Q-EL27 | RB-41 | GND-35 | 49-898 | |
| C1Q-EL27 | | GND-35 | | 49-924 |
| C1Q-EL30,A | RB-118 | GND-39 | | |
| C1Q-EL33,A | RB-137 | GND-39 | | |
| C1Q-EL34 | RB-138 | GND-59 | | |
| C1Q-EL36A | RB-118 | GND-39 | | |
| C1Q-EL38 | RB-118 | GND-39 | | |
| C1Q-EL39,A | RB-118 | GND-39 | | |
| C1Q-EL5,A | RB-45 | GND-33 | 49-438 | 49-884 |
| C1Q-EL52 | | GND-35 | | 49-924 |
| C1Q-EL6 | RB-45 | GND-33 | 49-438 | 49-884 |
| C1Q-EL7 | RB-45 | GND-33 | 49-438 | 49-884 |
| C1Q-H14 | | GND-27 | | 49-921 |
| C1Q-H14,A-B | RB-39 | GND-27 | 49-902 | |
| C1Q-H14A | | GND-27 | | 49-921 |
| C1Q-H14B | | GND-27 | | 49-921 |
| C1Q-H17 | | GND-27 | | 49-921 |
| C1Q-H17A | | GND-27 | | 49-921 |
| C1Q-H17A-D | RB-54 | GND-27 | | |
| C1Q-H17B | | GND-27 | | 49-921 |
| C1Q-H17C | | GND-27 | | 49-921 |
| C1Q-H17D | | GND-27 | | 49-921 |
| C1Q-H19 | | GND-27 | | 49-921 |
| C1Q-H19,A-C | RB-39 | GND-27 | 49-902 | |
| C1Q-H19A | | GND-27 | | 49-921 |
| C1Q-H19B | | GND-27 | | 49-921 |
| C1Q-H19C | | GND-27 | | 49-921 |
| C1Q-H27 | RB-39 | GND-27 | 49-902 | |
| C1Q-H27 | | GND-27 | | 49-921 |
| C1Q-H32 | | GND-27 | | 49-921 |
| C1Q-H32,A | RB-39 | GND-27 | 49-902 | |
| C1Q-H32A | | GND-27 | | 49-921 |
| C1Q-H35 | RB-54 | GND-27 | | |
| C1Q-H35 | | GND-27 | | 49-921 |
| C1Q-H42 | RB-54 | GND-27 | | |
| C1Q-H42 | | GND-27 | | 49-921 |
| C1Q-H43 | RB-54 | GND-27 | | |
| C1Q-H43 | | GND-27 | | 49-921 |
| C1Q-H44 | RB-54 | GND-27 | | |
| C1Q-H44 | | GND-27 | | 49-921 |
| C1Q-H45 | RB-54 | GND-27 | | |

| OEM CARBURETOR | | | OREGON | |
|---|---|---|---|---|
| Model | Kit | Gaskets | Kit | Gaskets |
| **Zama** | | | | |
| C1Q-H45 | | GND-27 | | 49-921 |
| C1Q-H64 | RB-146 | GND-82 | | |
| C1Q-K64,A | RB-56 | GND-57 | | |
| C1Q-K73,A | RB-113 | GND-61 | | |
| C1Q-K79 | RB-56 | GND-57 | | |
| C1Q-M24 | RB-38 | GND-27 | | |
| C1Q-M24 | | GND-27 | | 49-921 |
| C1Q-M25 | RB-38 | GND-27 | | |
| C1Q-M25 | | GND-27 | | 49-921 |
| C1Q-M26 | RB-38 | GND-27 | | |
| C1Q-M26 | | GND-27 | | 49-921 |
| C1Q-M27 | | GND-35 | | 49-924 |
| C1Q-M27,A-D | RB-39 | GND-35 | 49-902 | |
| C1Q-M27A | | GND-35 | | 49-924 |
| C1Q-M27B | | GND-35 | | 49-924 |
| C1Q-M27C | | GND-35 | | 49-924 |
| C1Q-M27D | | GND-35 | | 49-924 |
| C1Q-M28 | | GND-35 | | 49-924 |
| C1Q-M28,A-D | RB-39 | GND-35 | 49-902 | |
| C1Q-M28A | | GND-35 | | 49-924 |
| C1Q-M28B | | GND-35 | | 49-924 |
| C1Q-M28C | | GND-35 | | 49-924 |
| C1Q-M28D | | GND-35 | | 49-924 |
| C1Q-M31 | RB-51 | GND-39 | | |
| C1Q-M33 | | GND-35 | | 49-924 |
| C1Q-M33,A-D | RB-39 | GND-35 | 49-902 | |
| C1Q-M33A | | GND-35 | | 49-924 |
| C1Q-M33B | | GND-35 | | 49-924 |
| C1Q-M33C | | GND-35 | | 49-924 |
| C1Q-M33D | | GND-35 | | 49-924 |
| C1Q-M36 | | GND-35 | | 49-924 |
| C1Q-M36,A | RB-39 | GND-35 | 49-902 | |
| C1Q-M36A | | GND-35 | | 49-924 |
| C1Q-M39 | RB-38 | GND-27 | | |
| C1Q-M39 | | GND-27 | | 49-921 |
| C1Q-M41 | RB-51 | GND-39 | | |
| C1Q-M43 | RB-45 | GND-33 | 49-438 | 49-884 |
| C1Q-M44 | RB-110 | GND-33 | | 49-884 |
| C1Q-P18,A | RB-52 | GND-18 | | |
| C1Q-P22,A-C | RB-52 | GND-18 | | |
| C1Q-P24 | RB-52 | GND-18 | | |
| C1Q-P26,A-C | RB-52 | GND-18 | | |
| C1Q-P8 | RB-75 | GND-47 | | |
| C1Q-S100 | RB-134 | GND-72 | | |
| C1Q-S100 | | GND-72 | | 49-923 |
| C1Q-S100A | RB-166 | GND-93 | | |
| C1Q-S100A | | GND-93 | | 49-923 |
| C1Q-S101 | RB-134 | GND-72 | | |
| C1Q-S101 | | GND-72 | | 49-923 |
| C1Q-S101A | RB-166 | GND-93 | | |
| C1Q-S101A | | GND-93 | | 49-923 |
| C1Q-S102 | | GND-35 | | 49-924 |
| C1Q-S102,A | RB-105 | GND-35 | 49-273 | |
| C1Q-S102A | | GND-35 | | 49-924 |
| C1Q-S102B | | GND-35 | | 49-924 |
| C1Q-S102C | | GND-35 | | 49-924 |
| C1Q-S103 | RB-69 | GND-39 | 49-904 | |
| C1Q-S104 | RB-69 | GND-39 | 49-904 | |
| C1Q-S105 | RB-99 | GND-56 | 49-276 | |
| C1Q-S106 | | GND-35 | | 49-924 |
| C1Q-S106,A | RB-105 | GND-35 | 49-273 | |
| C1Q-S106A | | GND-35 | | 49-924 |
| C1Q-S107 | | GND-35 | | 49-924 |
| C1Q-S107,A | RB-105 | GND-35 | 49-273 | |
| C1Q-S107A | | GND-35 | | 49-924 |
| C1Q-S107B | | GND-35 | | 49-924 |
| C1Q-S107C | | GND-35 | | 49-924 |
| C1Q-S108,A | RB-69 | GND-39 | 49-904 | |
| C1Q-S109,A | RB-69 | GND-39 | 49-904 | |
| C1Q-S11 | | GND-35 | | 49-924 |
| C1Q-S110 | | GND-55 | | 49-923 |
| C1Q-S110,A | RB-97 | GND-55 | | |
| C1Q-S110A | | GND-55 | | 49-923 |
| C1Q-S110B | | GND-91 | | 49-923 |
| C1Q-S110B-C | RB-160 | GND-91 | | |
| C1Q-S110C | | GND-91 | | 49-923 |
| C1Q-S110D | | GND-91 | | 49-923 |
| C1Q-S111 | RB-99 | GND-56 | 49-276 | |

| OEM CARBURETOR | | | OREGON | |
|---|---|---|---|---|
| Model | Kit | Gaskets | Kit | Gaskets |
| **Zama** | | | | |
| C1Q-S112,A | RB-148 | GND-56 | | |
| C1Q-S113 | RB-147 | GND-50 | | |
| C1Q-S114 | RB-132 | GND-72 | | |
| C1Q-S114 | | GND-72 | | 49-923 |
| C1Q-S114A | | GND-72 | | 49-923 |
| C1Q-S115,A-B | RB-99 | GND-56 | 49-276 | |
| C1Q-S116,A | RB-99 | GND-56 | 49-276 | |
| C1Q-S117 | RB-152 | GND-50 | | |
| C1Q-S118,A-B | RB-151 | GND-84 | 49-319 | 49-313 |
| C1Q-S119,A-B | RB-150 | GND-56 | | |
| C1Q-S11A | | GND-35 | | 49-924 |
| C1Q-S11B | | GND-35 | | 49-924 |
| C1Q-S11C | | GND-35 | | 49-924 |
| C1Q-S11C-E | RB-41 | GND-35 | 49-898 | |
| C1Q-S11D | | GND-35 | | 49-924 |
| C1Q-S11E | | GND-35 | | 49-924 |
| C1Q-S11G | RB-50 | GND-35 | | |
| C1Q-S11G | | GND-35 | | 49-924 |
| C1Q-S120,A-B | RB-150 | GND-56 | | |
| C1Q-S121,A-B | RB-150 | GND-56 | | |
| C1Q-S122,A-B | RB-150 | GND-56 | | |
| C1Q-S123,A-B | RB-150 | GND-56 | | |
| C1Q-S124,A | RB-69 | GND-39 | 49-904 | |
| C1Q-S125 | RB-69 | GND-39 | 49-904 | |
| C1Q-S126 | RB-69 | GND-39 | 49-904 | |
| C1Q-S127 | RB-69 | GND-39 | 49-904 | |
| C1Q-S128 | RB-69 | GND-39 | 49-904 | |
| C1Q-S129 | RB-69 | GND-39 | 49-904 | |
| C1Q-S130 | | GND-93 | | 49-923 |
| C1Q-S130,A-B | RB-162 | GND-93 | | |
| C1Q-S130A | | GND-93 | | 49-923 |
| C1Q-S130B | | GND-93 | | 49-923 |
| C1Q-S131,A-B | RB-165 | GND-95 | | |
| C1Q-S132 | | GND-93 | | 49-923 |
| C1Q-S132,A-B | RB-162 | GND-93 | | |
| C1Q-S132A | | GND-93 | | 49-923 |
| C1Q-S132B | | GND-93 | | 49-923 |
| C1Q-S133 | | GND-93 | | 49-923 |
| C1Q-S133,A | RB-162 | GND-93 | | |
| C1Q-S133A | | GND-93 | | 49-923 |
| C1Q-S134 | RB-69 | GND-39 | 49-904 | |
| C1Q-S135 | RB-69 | GND-39 | 49-904 | |
| C1Q-S136 | RB-69 | GND-39 | 49-904 | |
| C1Q-S137 | RB-77 | GND-33 | 49-274 | 49-884 |
| C1Q-S138 | RB-89 | GND-50 | 49-288 | |
| C1Q-S139 | RB-89 | GND-50 | 49-288 | |
| C1Q-S140,A | RB-158 | GND-89 | | 49-320 |
| C1Q-S143 | RB-157 | GND-89 | | 49-320 |
| C1Q-S150 | RB-161 | GND-92 | | |
| C1Q-S152 | RB-77 | GND-33 | 49-274 | 49-884 |
| C1Q-S153 | RB-161 | GND-92 | | |
| C1Q-S154 | RB-169 | GND-98 | | |
| C1Q-S155 | RB-170 | GND-98 | | |
| C1Q-S156 | RB-171 | GND-98 | | |
| C1Q-S157 | RB-100 | GND-56 | 49-441 | |
| C1Q-S159 | RB-173 | GND-99 | | |
| C1Q-S16 | | GND-35 | | 49-924 |
| C1Q-S160 | RB-161 | GND-92 | | |
| C1Q-S161 | RB-172 | GND-98 | | |
| C1Q-S162 | RB-172 | GND-98 | | |
| C1Q-S165 | RB-161 | GND-92 | | |
| C1Q-S166 | RB-161 | GND-92 | | |
| C1Q-S167 | RB-175 | GND-100 | | |
| C1Q-S169 | RB-161 | GND-92 | | |
| C1Q-S16A | RB-41 | GND-35 | 49-898 | |
| C1Q-S16A | | GND-35 | | 49-924 |
| C1Q-S170 | RB-161 | GND-92 | | |
| C1Q-S171,A | RB-165 | GND-95 | | |
| C1Q-S183 | | GND-93 | | 49-923 |
| C1Q-S184 | | GND-93 | | 49-923 |
| C1Q-S185 | | GND-93 | | 49-923 |
| C1Q-S28,A-D | RB-66 | GND-28 | | 49-883 |
| C1Q-S29,A-C | RB-66 | GND-28 | | 49-883 |
| C1Q-S30,A-C | RB-66 | GND-28 | | 49-883 |
| C1Q-S32 | RB-69 | GND-39 | 49-904 | |
| C1Q-S33,A-B | RB-40 | GND-28 | 49-437 | 49-883 |
| C1Q-S34,A-H | RB-40 | GND-28 | 49-437 | 49-883 |
| C1Q-S35,A-B | RB-40 | GND-28 | 49-437 | 49-883 |

C

| OEM CARBURETOR | | | OREGON | |
|---|---|---|---|---|
| Model | Kit | Gaskets | Kit | Gaskets |
| **Zama** | | | | |
| C1Q-S36,A-G | RB-40 | GND-28 | 49-437 | 49-883 |
| C1Q-S37 | | GND-35 | | 49-924 |
| C1Q-S37,A-B | RB-72 | GND-35 | | |
| C1Q-S37A | | GND-35 | | 49-924 |
| C1Q-S37B | | GND-35 | | 49-924 |
| C1Q-S41,A | RB-66 | GND-28 | | 49-883 |
| C1Q-S41B | RB-85 | GND-51 | | |
| C1Q-S42B | RB-85 | GND-51 | | |
| C1Q-S43,A-B | RB-77 | GND-33 | 49-274 | 49-884 |
| C1Q-S44,A | RB-66 | GND-28 | | 49-883 |
| C1Q-S45 | RB-66 | GND-28 | | 49-883 |
| C1Q-S46 | | GND-35 | | 49-924 |
| C1Q-S46,A-B | RB-72 | GND-35 | | |
| C1Q-S46A | | GND-35 | | 49-924 |
| C1Q-S46B | | GND-35 | | 49-924 |
| C1Q-S46C | | GND-35 | | 49-924 |
| C1Q-S47 | RB-85 | GND-51 | | |
| C1Q-S48,A | RB-89 | GND-50 | 49-288 | |
| C1Q-S49,A-B | RB-83 | GND-39 | | |
| C1Q-S50 | RB-79 | GND-39 | | |
| C1Q-S51,A-C | RB-40 | GND-28 | 49-437 | 49-883 |
| C1Q-S51D | RB-83 | GND-39 | | |
| C1Q-S53,A | RB-85 | GND-51 | | |
| C1Q-S54 | RB-84 | GND-50 | | |
| C1Q-S55 | RB-89 | GND-50 | 49-288 | |
| C1Q-S56 | RB-85 | GND-51 | | |
| C1Q-S57,A-B | RB-77 | GND-33 | 49-274 | 49-884 |
| C1Q-S58 | RB-89 | GND-50 | 49-288 | |
| C1Q-S59,A | RB-91 | GND-39 | | |
| C1Q-S60 | RB-85 | GND-51 | | |
| C1Q-S61,A-E | RB-69 | GND-39 | 49-904 | |
| C1Q-S62 | RB-93 | GND-53 | | |
| C1Q-S63,A | RB-84 | GND-50 | | |
| C1Q-S64 | RB-89 | GND-50 | 49-288 | |
| C1Q-S66 | RB-84 | GND-50 | | |
| C1Q-S67 | RB-96 | GND-53 | | |
| C1Q-S68,A-D | RB-99 | GND-56 | 49-276 | |
| C1Q-S69A | RB-100 | GND-56 | 49-441 | |
| C1Q-S70 | RB-100 | GND-56 | 49-441 | |
| C1Q-S70A | RB-161 | GND-92 | | |
| C1Q-S71 | RB-100 | GND-56 | 49-441 | |
| C1Q-S72 | RB-97 | GND-55 | | |
| C1Q-S72 | | GND-55 | | 49-923 |
| C1Q-S72B | RB-114 | GND-55 | 49-287 | |
| C1Q-S72B | | GND-55 | | 49-923 |
| C1Q-S73 | RB-100 | GND-56 | 49-441 | |
| C1Q-S74,A-D | RB-106 | GND-58 | | |
| C1Q-S75 | | GND-35 | | 49-924 |
| C1Q-S75,A-B | RB-105 | GND-35 | 49-273 | |
| C1Q-S75A | | GND-35 | | 49-924 |
| C1Q-S75B | | GND-35 | | 49-924 |
| C1Q-S75C | | GND-35 | | 49-924 |
| C1Q-S75D | | GND-35 | | 49-924 |
| C1Q-S76 | | GND-35 | | 49-924 |
| C1Q-S76,A-B | RB-105 | GND-35 | 49-273 | |
| C1Q-S76A | | GND-35 | | 49-924 |
| C1Q-S76B | | GND-35 | | 49-924 |
| C1Q-S76C | | GND-35 | | 49-924 |
| C1Q-S76D | | GND-35 | | 49-924 |
| C1Q-S77 | | GND-35 | | 49-924 |
| C1Q-S77,A-B | RB-105 | GND-35 | 49-273 | |
| C1Q-S77A | | GND-35 | | 49-924 |
| C1Q-S77B | | GND-35 | | 49-924 |
| C1Q-S77C | | GND-35 | | 49-924 |
| C1Q-S77D | | GND-35 | | 49-924 |
| C1Q-S78 | RB-84 | GND-50 | | |
| C1Q-S79 | RB-100 | GND-56 | 49-441 | |
| C1Q-S80B-C | RB-100 | GND-56 | 49-441 | |
| C1Q-S81 | RB-114 | GND-55 | 49-287 | |
| C1Q-S81 | | GND-55 | | 49-923 |
| C1Q-S82 | RB-89 | GND-50 | 49-288 | |
| C1Q-S83 | RB-89 | GND-50 | 49-288 | |
| C1Q-S84 | | GND-35 | | 49-924 |
| C1Q-S84,A-C | RB-105 | GND-35 | 49-273 | |
| C1Q-S84A | | GND-35 | | 49-924 |
| C1Q-S84B | | GND-35 | | 49-924 |
| C1Q-S84C | | GND-35 | | 49-924 |
| C1Q-S84D | | GND-35 | | 49-924 |

| OEM CARBURETOR | | | OREGON | |
|---|---|---|---|---|
| Model | Kit | Gaskets | Kit | Gaskets |
| **Zama** | | | | |
| C1Q-S84E | | GND-35 | | 49-924 |
| C1Q-S85 | | GND-35 | | 49-924 |
| C1Q-S85,A-C | RB-105 | GND-35 | 49-273 | |
| C1Q-S85A | | GND-35 | | 49-924 |
| C1Q-S85B | | GND-35 | | 49-924 |
| C1Q-S85C | | GND-35 | | 49-924 |
| C1Q-S85D | | GND-35 | | 49-924 |
| C1Q-S85E | | GND-35 | | 49-924 |
| C1Q-S86 | | GND-35 | | 49-924 |
| C1Q-S86,A-C | RB-105 | GND-35 | 49-273 | |
| C1Q-S86A | | GND-35 | | 49-924 |
| C1Q-S86B | | GND-35 | | 49-924 |
| C1Q-S86C | | GND-35 | | 49-924 |
| C1Q-S86D | | GND-35 | | 49-924 |
| C1Q-S86E | | GND-35 | | 49-924 |
| C1Q-S87 | | GND-35 | | 49-924 |
| C1Q-S87,A-C | RB-105 | GND-35 | 49-273 | |
| C1Q-S87A | | GND-35 | | 49-924 |
| C1Q-S87B | | GND-35 | | 49-924 |
| C1Q-S87C | | GND-35 | | 49-924 |
| C1Q-S87D | | GND-35 | | 49-924 |
| C1Q-S87E | | GND-35 | | 49-924 |
| C1Q-S88 | RB-114 | GND-55 | 49-287 | |
| C1Q-S88 | | GND-55 | | 49-923 |
| C1Q-S89 | | GND-35 | | 49-924 |
| C1Q-S89,A-C | RB-105 | GND-35 | 49-273 | |
| C1Q-S89A | | GND-35 | | 49-924 |
| C1Q-S89B | | GND-35 | | 49-924 |
| C1Q-S89C | | GND-35 | | 49-924 |
| C1Q-S89D | | GND-35 | | 49-924 |
| C1Q-S89E | | GND-35 | | 49-924 |
| C1Q-S90 | | GND-35 | | 49-924 |
| C1Q-S90,A-B | RB-105 | GND-35 | 49-273 | |
| C1Q-S90A | | GND-35 | | 49-924 |
| C1Q-S90B | | GND-35 | | 49-924 |
| C1Q-S90C | | GND-35 | | 49-924 |
| C1Q-S90D | | GND-35 | | 49-924 |
| C1Q-S91 | | GND-35 | | 49-924 |
| C1Q-S91,A | RB-105 | GND-35 | 49-273 | |
| C1Q-S91A | | GND-35 | | 49-924 |
| C1Q-S91B | | GND-35 | | 49-924 |
| C1Q-S91C | | GND-35 | | 49-924 |
| C1Q-S92 | | GND-35 | | 49-924 |
| C1Q-S92,A | RB-105 | GND-35 | 49-273 | |
| C1Q-S92A | | GND-35 | | 49-924 |
| C1Q-S92B | | GND-35 | | 49-924 |
| C1Q-S92C | | GND-35 | | 49-924 |
| C1Q-S93 | RB-100 | GND-56 | 49-441 | |
| C1Q-S94 | RB-84 | GND-50 | | |
| C1Q-S95 | RB-100 | GND-56 | 49-441 | |
| C1Q-S96,A-B | RB-69 | GND-39 | 49-904 | |
| C1Q-S97,A | RB-100 | GND-56 | 49-441 | |
| C1Q-S98 | RB-132 | GND-72 | | |
| C1Q-S98 | | GND-72 | | 49-923 |
| C1Q-S98A | | GND-93 | | 49-923 |
| C1Q-S98A-B | RB-162 | GND-93 | | |
| C1Q-S98B | | GND-93 | | 49-923 |
| C1Q-S98C | | GND-93 | | 49-923 |
| C1Q-S99 | RB-134 | GND-72 | | |
| C1Q-S99 | | GND-72 | | 49-923 |
| C1Q-S99A | RB-166 | GND-93 | | |
| C1Q-S99A | | GND-93 | | 49-923 |
| C1Q-SK10 | RB-68 | GND-17 | | 49-880 |
| C1Q-SK15 | RB-68 | GND-17 | | 49-880 |
| C1Q-SK16 | RB-68 | GND-17 | | 49-880 |
| C1Q-SK4 | RB-40 | GND-28 | 49-437 | 49-883 |
| C1Q-SK5 | RB-40 | GND-28 | 49-437 | 49-883 |
| C1Q-SK6,A | RB-40 | GND-28 | 49-437 | 49-883 |
| C1Q-SK7 | RB-40 | GND-28 | 49-437 | 49-883 |
| C1Q-SK8 | RB-68 | GND-17 | | 49-880 |
| C1Q-SK9 | RB-68 | GND-17 | | 49-880 |
| C1Q-W11,A-G | RB-47 | GND-18 | 49-272 | |
| C1Q-W14 | | GND-27 | | 49-921 |
| C1Q-W14,A | RB-41 | GND-27 | 49-898 | |
| C1Q-W14A | | GND-27 | | 49-921 |
| C1Q-W15 | RB-38 | GND-27 | | |
| C1Q-W15 | | GND-27 | | 49-921 |
| C1Q-W20 | | GND-27 | | 49-921 |

| OEM CARBURETOR | | | OREGON | |
|---|---|---|---|---|
| Model | Kit | Gaskets | Kit | Gaskets |
| **Zama** | | | | |
| C1Q-W20,A-B | RB-41 | GND-27 | 49-898 | |
| C1Q-W20A | | GND-27 | | 49-921 |
| C1Q-W20B | | GND-27 | | 49-921 |
| C1Q-W29 | | GND-27 | | 49-921 |
| C1Q-W29,A-E | RB-38 | GND-27 | | |
| C1Q-W29A | | GND-27 | | 49-921 |
| C1Q-W29B | | GND-27 | | 49-921 |
| C1Q-W29C | | GND-27 | | 49-921 |
| C1Q-W29D | | GND-27 | | 49-921 |
| C1Q-W29E | | GND-27 | | 49-921 |
| C1Q-W2A | RB-39 | GND-27 | 49-902 | |
| C1Q-W2A | | GND-27 | | 49-921 |
| C1Q-W31,A-B | rb-47 | GND-18 | 49-272 | |
| C1Q-W34,A | RB-47 | GND-18 | 49-272 | |
| C1Q-W35,A | RB-47 | GND-18 | 49-272 | |
| C1Q-W36.A | RB-47 | GND-18 | 49-272 | |
| C1Q-W37 | RB-47 | GND-18 | 49-272 | |
| C1Q-W38 | RB-47 | GND-18 | 49-272 | |
| C1Q-W39 | RB-47 | GND-18 | 49-272 | |
| C1Q-W40 | RB-47 | GND-18 | 49-272 | |
| C1Q-W41 | RB-47 | GND-18 | 49-272 | |
| C1Q-W5 | | GND-27 | | 49-921 |
| C1Q-W5,A-C | RB-38 | GND-27 | | |
| C1Q-W5A | | GND-27 | | 49-921 |
| C1Q-W5B | | GND-27 | | 49-921 |
| C1Q-W5C | | GND-27 | | 49-921 |
| C1Q-W6 | | GND-27 | | 49-921 |
| C1Q-W6,A-C | RB-38 | GND-27 | | |
| C1Q-W6A | | GND-27 | | 49-921 |
| C1Q-W6B | | GND-27 | | 49-921 |
| C1Q-W6C | | GND-27 | | 49-921 |
| C1Q-W8 | RB-72 | GND-27 | | |
| C1Q-W8 | | GND-27 | | 49-921 |
| C1Q-W9 | | GND-27 | | 49-921 |
| C1Q-W9,A-E | RB-72 | GND-27 | | |
| C1Q-W9A | | GND-27 | | 49-921 |
| C1Q-W9B | | GND-27 | | 49-921 |
| C1Q-W9C | | GND-27 | | 49-921 |
| C1Q-W9D | | GND-27 | | 49-921 |
| C1Q-W9E | | GND-27 | | 49-921 |
| C1Q-Z4 | RB-72 | GND-35 | | |
| C1Q-Z4 | | GND-35 | | 49-924 |
| C1Q-Z5 | RB-72 | GND-35 | | |
| C1Q-Z5 | | GND-35 | | 49-924 |
| C1Q-Z6 | | GND-27 | | 49-921 |
| C1Q-Z6,A | RB-120 | GND-27 | | |
| C1Q-Z6A | | GND-27 | | 49-921 |
| C1Q-Z7 | | GND-27 | | 49-921 |
| C1Q-Z7,A | RB-120 | GND-27 | | |
| C1Q-Z7A | | GND-27 | | 49-921 |
| C1S-E1 | RB-02 | GND-02 | | 49-881 |
| C1S-E2 | RB-02 | GND-02 | | 49-881 |
| C1S-H2A | RB-03 | GND-02 | | 49-881 |
| C1S-H3 | RB-03 | GND-02 | | 49-881 |
| C1S-H4A-C | RB-05 | GND-02 | | 49-881 |
| C1S-H6A | RB-03 | GND-02 | | 49-881 |
| C1S-H7 | RB-03 | GND-02 | | 49-881 |
| C1S-H8,A | RB-05 | GND-02 | | 49-881 |
| C1S-K1,A-C | RB-06 | GND-03 | | |
| C1S-K1D | RB-07 | GND-04 | | 49-282 |
| C1S-K3A-C | RB-03 | GND-02 | | 49-881 |
| C1S-K3D | RB-08 | GND-06 | | 49-896 |
| C1S-K6A-B | RB-09 | GND-05 | | 49-895 |
| C1S-M12 | RB-10 | GND-32 | 49-818-0 | |
| C1S-M13 | RB-10 | GND-32 | 49-818-0 | |
| C1S-M8 | RB-10 | GND-32 | 49-818-0 | |
| C1S-M9 | RB-10 | GND-32 | 49-818-0 | |
| C1S-S1,A-C | RB-11 | GND-07 | | 49-859 |
| C1S-S2 | RB-12 | GND-07 | | 49-859 |
| C1S-S3,A-G | RB-13 | GND-07 | | 49-859 |
| C1S-SK1 | RB-13 | GND-07 | | 49-859 |
| C1S-SK2 | RB-13 | GND-07 | | 49-859 |
| C1S-Z1,A-D | RB-14 | GND-06 | | 49-896 |
| C1T-EL41A | RB-149 | GND-83 | | |
| C1T-W33,A-B | RB-149 | GND-83 | | |
| C1U-D1AB | RB-63 | GND-17 | | 49-880 |
| C1U-D1B | RB-63 | GND-17 | | 49-880 |
| C1U-DM4,A-C | RB-20 | GND-12 | 49-864 | 49-855 |

C

# Carburetor Kit Reference

| OEM CARBURETOR | | | OREGON | |
|---|---|---|---|---|
| Model | Kit | Gaskets | Kit | Gaskets |
| **Zama** | | | | |
| C1U-FD1 | RB-48 | GND-18 | | |
| C1U-H10,A-F | RB-20 | GND-12 | 49-864 | 49-855 |
| C1U-H11,A-K | RB-20 | GND-12 | 49-864 | 49-855 |
| C1U-H12,A-B | RB-20 | GND-12 | 49-864 | 49-855 |
| C1U-H12C-D | RB-29 | GND-12 | 49-285 | 49-855 |
| C1U-H13,A-E | RB-20 | GND-12 | 49-864 | 49-855 |
| C1U-H18,A-D | RB-29 | GND-12 | 49-285 | 49-855 |
| C1U-H28 | RB-28 | GND-18 | 49-865 | |
| C1U-H29 | RB-29 | GND-18 | 49-285 | |
| C1U-H30,B | RB-29 | GND-18 | 49-285 | |
| C1U-H31,A-C | RB-29 | GND-18 | 49-285 | |
| C1U-H33 | RB-29 | GND-12 | 49-285 | 49-855 |
| C1U-H36 | RB-20 | GND-12 | 49-864 | 49-855 |
| C1U-H37 | RB-20 | GND-12 | 49-864 | 49-855 |
| C1U-H39,A | RB-29 | GND-18 | 49-285 | |
| C1U-H40 | RB-29 | GND-12 | 49-285 | 49-855 |
| C1U-H41 | RB-29 | GND-18 | 49-285 | |
| C1U-H46,A | RB-82 | GND-49 | | |
| C1U-H47 | RB-29 | GND-18 | 49-285 | |
| C1U-H48,A | RB-29 | GND-18 | 49-285 | |
| C1U-H49 | RB-82 | GND-49 | | |
| C1U-H60,A-E | RB-29 | GND-18 | 49-285 | |
| C1U-H61,A | RB-20 | GND-12 | 49-864 | 49-855 |
| C1U-H62,A | RB-141 | GND-77 | | |
| C1U-K10 | RB-21 | GND-18 | 49-865 | |
| C1U-K10A | RB-27 | GND-17 | 49-897 | 49-880 |
| C1U-K11 | RB-21 | GND-18 | 49-865 | |
| C1U-K12 | RB-27 | GND-17 | 49-897 | 49-880 |
| C1U-K13 | RB-63 | GND-17 | | 49-880 |
| C1U-K14 | RB-21 | GND-18 | 49-865 | |
| C1U-K15,A-B | RB-21 | GND-18 | 49-865 | |
| C1U-K16,A | RB-21 | GND-18 | 49-865 | |
| C1U-K17 | RB-23 | GND-12 | 49-283 | 49-855 |
| C1U-K18,A-B | RB-63 | GND-17 | | 49-880 |
| C1U-K19 | RB-25 | GND-17 | | 49-880 |
| C1U-K20,A-C | RB-26 | GND-17 | 49-284 | 49-880 |
| C1U-K21 | RB-27 | GND-17 | 49-897 | 49-880 |
| C1U-K21A-B | RB-26 | GND-17 | 49-284 | 49-880 |
| C1U-K22,A | RB-27 | GND-17 | 49-897 | 49-880 |
| C1U-K23 | RB-26 | GND-17 | 49-284 | 49-880 |
| C1U-K23A-B | RB-27 | GND-17 | 49-897 | 49-880 |
| C1U-K26 | RB-21 | GND-18 | 49-865 | |
| C1U-K26A-B | RB-52 | GND-18 | | |
| C1U-K27,A-D | RB-23 | GND-12 | 49-283 | 49-855 |
| C1U-K28,A | RB-48 | GND-18 | | |
| C1U-K29,A | RB-21 | GND-18 | 49-865 | |
| C1U-K30,A | RB-27 | GND-17 | 49-897 | 49-880 |
| C1U-K31 | RB-26 | GND-17 | 49-284 | 49-880 |
| C1U-K31A-B | RB-27 | GND-17 | 49-897 | 49-880 |
| C1U-K32,A | RB-21 | GND-18 | 49-865 | |
| C1U-K34,A | RB-26 | GND-17 | 49-284 | 49-880 |
| C1U-K35,A | RB-27 | GND-17 | 49-897 | 49-880 |
| C1U-K36,A | RB-48 | GND-18 | | |
| C1U-K39,A-B | RB-62 | GND-40 | | |
| C1U-K4 | RB-21 | GND-18 | 49-865 | |
| C1U-K41,A-B | RB-62 | GND-40 | | |
| C1U-K42,A-B | RB-59 | GND-38 | 49-286 | |
| C1U-K43,A-B | RB-59 | GND-38 | 49-286 | |
| C1U-K44,A-B | RB-59 | GND-38 | 49-286 | |
| C1U-K45 | RB-27 | GND-17 | 49-897 | 49-880 |
| C1U-K46 | RB-65 | GND-38 | | |
| C1U-K47 | RB-64 | GND-41 | 49-439 | |
| C1U-K51 | RB-64 | GND-41 | 49-439 | |
| C1U-K52 | RB-64 | GND-41 | 49-439 | |
| C1U-K53 | RB-64 | GND-41 | 49-439 | |
| C1U-K53A-B | RB-121 | GND-41 | | |
| C1U-K54,A | RB-71 | GND-44 | 49-271 | |
| C1U-K55 | RB-64 | GND-41 | 49-439 | |
| C1U-K58 | RB-64 | GND-41 | 49-439 | |
| C1U-K59 | RB-64 | GND-41 | 49-439 | |
| C1U-K62 | RB-64 | GND-41 | 49-439 | |
| C1U-K68 | RB-104 | GND-41 | | |
| C1U-K7,A | RB-21 | GND-18 | 49-865 | |
| C1U-K78 | RB-125 | GND-68 | | |
| C1U-K8,A | RB-21 | GND-18 | 49-865 | |
| C1U-K81,A-B | RB-71 | GND-44 | 49-271 | |
| C1U-K82 | RB-71 | GND-44 | 49-271 | |
| C1U-K83 | RB-136 | GND-75 | | |

| OEM CARBURETOR | | | OREGON | |
|---|---|---|---|---|
| Model | Kit | Gaskets | Kit | Gaskets |
| **Zama** | | | | |
| C1U-K9,A | RB-21 | GND-18 | 49-865 | |
| C1U-M16 | RB-28 | GND-18 | 49-865 | |
| C1U-M20 | RB-28 | GND-18 | 49-865 | |
| C1U-M21,A-C | RB-20 | GND-12 | 49-864 | 49-855 |
| C1U-M29,A-E | RB-48 | GND-18 | | |
| C1U-M32,A-C | RB-28 | GND-18 | 49-865 | |
| C1U-M35A | RB-29 | GND-12 | 49-285 | 49-855 |
| C1U-M37,A | RB-48 | GND-18 | | |
| C1U-M38 | RB-28 | GND-18 | 49-865 | |
| C1U-M40 | RB-28 | GND-18 | 49-865 | |
| C1U-M42 | RB-28 | GND-18 | 49-865 | |
| C1U-P10,A | RB-29 | GND-18 | 49-285 | |
| C1U-P11,A-B | RB-29 | GND-18 | 49-285 | |
| C1U-P12,A | RB-29 | GND-18 | 49-285 | |
| C1U-P14,A | RB-29 | GND-18 | 49-285 | |
| C1U-P17 | RB-98 | GND-18 | | |
| C1U-P21,A-B | RB-98 | GND-18 | | |
| C1U-P23 | RB-98 | GND-18 | | |
| C1U-P5 | RB-29 | GND-18 | 49-285 | |
| C1U-P6,A | RB-29 | GND-18 | 49-285 | |
| C1U-P7 | RB-29 | GND-18 | 49-285 | |
| C1U-SK11 | RB-26 | GND-17 | 49-284 | 49-880 |
| C1U-SK12 | RB-26 | GND-17 | 49-284 | 49-880 |
| C1U-SK13,A | RB-26 | GND-17 | 49-284 | 49-880 |
| C1U-SK14 | RB-26 | GND-17 | 49-284 | 49-880 |
| C1U-SK17 | RB-64 | GND-41 | 49-439 | |
| C1U-W10,B-C | RB-47 | GND-18 | 49-272 | |
| C1U-W12,A-B | RB-47 | GND-18 | 49-272 | |
| C1U-W13,A-B | RB-47 | GND-18 | 49-272 | |
| C1U-W16,B-C | RB-47 | GND-18 | 49-272 | |
| C1U-W17,A | RB-111 | GND-49 | | |
| C1U-W18,A | RB-115 | GND-12 | | 49-855 |
| C1U-W19 | RB-117 | GND-64 | | |
| C1U-W22 | RB-47 | GND-18 | 49-272 | |
| C1U-W24 | RB-115 | GND-12 | | 49-855 |
| C1U-W32,A | RB-142 | GND-78 | 49-275 | |
| C1U-W4,A-E | RB-73 | GND-12 | 49-908 | 49-855 |
| C1U-W43,A-B | RB-156 | GND-77 | | |
| C1U-W45 | RB-156 | GND-77 | | |
| C1U-W46 | RB-47 | GND-18 | 49-272 | |
| C1U-W7A-B | RB-78 | GND-17 | | 49-880 |
| C1U-W7C-D | RB-73 | GND-18 | 49-908 | |
| C2-20-01,A | RB-15 | GND-08 | 49-836-0 | 49-860 |
| C2-20-02,A | RB-15 | GND-08 | 49-836-0 | 49-860 |
| C2-L1,A | RB-15 | GND-08 | 49-836-0 | 49-860 |
| C2-M3A | RB-15 | GND-08 | 49-836-0 | 49-860 |
| C2S-H5,A | RB-16 | GND-09 | | |
| C2S-H9 | RB-17 | GND-09 | | |
| C3-E8,A | RB-95 | GND-54 | | |
| C3-E9,A | RB-95 | GND-54 | | |
| C3-EL15,A | RB-95 | GND-54 | | |
| C3-EL16,A | RB-95 | GND-54 | | |
| C3-EL17,A-B | RB-122 | GND-65 | | |
| C3-EL18,A-B | RB-122 | GND-65 | | |
| C3-EL29,A-B | RB-133 | GND-73 | | |
| C3-EL29C | RB-177 | GND-73 | | |
| C3-EL32 | RB-122 | GND-65 | | |
| C3-EL42 | RB-163 | GND-94 | | |
| C3-EL43 | RB-133 | GND-73 | | |
| C3-EL43A | RB-177 | GND-73 | | |
| C3-K5 | RB-43 | GND-19 | | |
| C3-S148 | RB-167 | GND-96 | | |
| C3-S149 | RB-167 | GND-96 | | |
| C3A-G1,A | RB-30 | GND-20 | | |
| C3A-S19 | RB-31 | GND-21 | 49-899 | 49-893 |
| C3A-S25 | RB-31 | GND-21 | 49-899 | 49-893 |
| C3A-S26 | RB-31 | GND-21 | 49-899 | 49-893 |
| C3A-S27,A-D | RB-31 | GND-21 | 49-899 | 49-893 |
| C3A-S31,A-E | RB-31 | GND-21 | 49-899 | 49-893 |
| C3A-S38,A-B | RB-31 | GND-21 | 49-899 | 49-893 |
| C3A-S39,A-B | RB-31 | GND-21 | 49-899 | 49-893 |
| C3A-S4A-C | RB-31 | GND-21 | 49-899 | 49-893 |
| C3A-S52 | RB-31 | GND-21 | 49-899 | 49-893 |
| C3A-S65 | RB-31 | GND-21 | 49-899 | 49-893 |
| C3M-DM11,A-B | RB-101 | GND-63 | | |
| C3M-DM11C-D | RB-153 | GND-86 | | |
| C3M-DM12,A | RB-101 | GND-63 | | |
| C3M-DM12B | RB-153 | GND-86 | | |

| OEM CARBURETOR | | | OREGON | |
|---|---|---|---|---|
| Model | Kit | Gaskets | Kit | Gaskets |
| **Zama** | | | | |
| C3M-EL2A-C | RB-60 | GND-24 | | |
| C3M-EL8,A-B | RB-60 | GND-24 | | |
| C3M-FJ1,A | RB-35 | GND-24 | | |
| C3M-FJ2,A | RB-35 | GND-24 | | |
| C3M-FJ3,A-C | RB-35 | GND-24 | | |
| C3M-FJ4 | RB-35 | GND-24 | | |
| C3M-FJ5,A | RB-35 | GND-24 | | |
| C3M-K33,A-D | RB-53 | GND-26 | | |
| C3M-K74 | RB-116 | GND-62 | | |
| C3M-K80 | RB-116 | GND-62 | | |
| C3M-S12,A-B | RB-36 | GND-25 | 49-867 | 49-857 |
| C3M-S20 | RB-36 | GND-25 | 49-867 | 49-857 |
| C3M-S21 | RB-36 | GND-25 | 49-867 | 49-857 |
| C3M-S22 | RB-36 | GND-25 | 49-867 | 49-857 |
| C3M-S23 | RB-36 | GND-25 | 49-867 | 49-857 |
| C3M-S24 | RB-36 | GND-25 | 49-867 | 49-857 |
| C3M-S5,A-C | RB-37 | GND-26 | | |
| C3M-S5D-G | RB-36 | GND-25 | 49-867 | 49-857 |
| G1L-E11 | | GND-35 | | 49-924 |
| G1L-E11,A | RB-41 | GND-35 | 49-898 | |
| G1L-E11A | | GND-35 | | 49-924 |
| LA-S6,A | RB-42 | GND-30 | 49-879 | |
| LA-S7,A | RB-42 | GND-30 | 49-879 | |
| LA-S8,A | RB-42 | GND-30 | 49-879 | |
| LB-S9,A | RB-42 | GND-30 | 49-879 | |
| LE-H53 | RB-86 | GND-18 | | |
| LE-H54,A | RB-86 | GND-49 | | |
| LE-H55 | RB-94 | GND-12 | | 49-855 |
| LE-H56 | RB-94 | GND-12 | | 49-855 |
| RB-FA1 | RB-107 | GND-52 | | |
| RB-FR2,A | RB-102 | GND-52 | | |
| RB-FR3,A | RB-103 | GND-52 | | |
| RB-FR4 | RB-102 | GND-52 | | |
| RB-JF1 | RB-128 | GND-52 | | |
| RB-K57,A-B | RB-81 | GND-48 | | |
| RB-K60,A | RB-88 | GND-52 | | |
| RB-K61,A | RB-88 | GND-52 | | |
| RB-K63 | RB-81 | GND-48 | | |
| RB-K65,A | RB-112 | GND-52 | | |
| RB-K66 | RB-112 | GND-52 | | |
| RB-K66A-B | RB-107 | GND-52 | | |
| RB-K67 | RB-112 | GND-52 | | |
| RB-K67A-B | RB-107 | GND-52 | | |
| RB-K70,A | RB-107 | GND-52 | | |
| RB-K71 | RB-107 | GND-52 | | |
| RB-K72 | RB-107 | GND-52 | | |
| RB-K75 | RB-123 | GND-66 | | |
| RB-K84 | RB-139 | GND-66 | | |
| RB-K85 | RB-123 | GND-66 | | |
| RB-K86 | RB-123 | GND-66 | | |
| RB-K87 | RB-123 | GND-66 | | |
| RB-K88 | RB-123 | GND-66 | | |
| RB-K89 | RB-139 | GND-66 | | |
| RB-K90 | RB-123 | GND-66 | | |
| RB-K91 | RB-123 | GND-66 | | |
| RB-K92 | RB-123 | GND-66 | | |
| RB-K93 | RB-123 | GND-66 | | |
| RB-K94 | RB-139 | GND-66 | | |
| RB-P25 | RB-128 | GND-52 | | |
| RB-SK18,A | RB-107 | GND-52 | | |
| RC1-M45 | RB-135 | GND-74 | | |
| RC1-M46 | RB-135 | GND-74 | | |
| RC2-M47 | RB-135 | GND-74 | | |
| RC2-M48 | RB-135 | GND-74 | | |

C

# Carburetor Kit Reference

| OEM CARBURETOR | | | OREGON | |
|---|---|---|---|---|
| Model | Kit | Gaskets | Kit | Gaskets |

| OEM CARBURETOR | | | OREGON | |
|---|---|---|---|---|
| Model | Kit | Gaskets | Kit | Gaskets |

| OEM CARBURETOR | | | OREGON | |
|---|---|---|---|---|
| Model | Kit | Gaskets | Kit | Gaskets |

C

# Carburetor Kit Application Chart

| OEM ENGINE/UNIT | | WALBRO CARBURETOR | | | OREGON | |
|---|---|---|---|---|---|---|
| Model | Carb | № | Kit | Gaskets | Kit | Gaskets |
| **Active** | | | | | | |
| BIG 4.3 | W | WYK-60-1 | K21-WYK | D21-WYK | | |
| BIG 5.2 | W | WYK-210-1 | K21-WYK | D21-WYK | | |
| BIG 5.2 | W | WYK-60-1 | K21-WYK | D21-WYK | | |
| Freetime25 | W | WYC-12 | K10-WYC | D10-WYC | | |
| INDY | W | WYK-89 | K21-WYK | D13-WYK | | |
| K 1 | W | WT-234-1 | K20-WAT | D10-WAT | 49-831 | 49-812 |
| K 2 | W | WT-234-1 | K20-WAT | D10-WAT | 49-831 | 49-812 |
| K 3 | W | WT-234-1 | K20-WAT | D10-WAT | 49-831 | 49-812 |
| Non Specified | W | WYK-212-1 | K21-WYK | D21-WYK | | |
| Non Specified | W | WYK-211-1 | K21-WYK | D21-WYK | | |
| Non Specified | W | WT-710-1 | K20-WAT | D20-WAT | 49-831 | 49-844 |
| Unspecified | W | WYK-122-1 | K21-WYK | D21-WYK | | |
| Alpina | W | | | | | |
| 56 | T | HE-3A | | | | 49-800 |
| 66 | T | HE-3A | | DG-1HK | | 49-800 |
| 70 | T | HS-158E | RK-23HS | DG-5HS | 49-803 | 49-802 |
| 232 | W | WT-115-1 | K10-WAT | D10-WAT | 49-816 | 49-812 |
| 238 | W | WT-115 | K10-WAT | D10-WAT | 49-816 | 49-812 |
| 330 | W | WA-210-1 | K10-WAT | D10-WAT | 49-816 | 49-812 |
| 330 | W | WA-222-1 | K10-WAT | D10-WAT | 49-816 | 49-812 |
| 330 | W | WA-53-1 | K10-WAT | D10-WAT | 49-816 | 49-812 |
| 360 | W | WT-534-1 | K20-WAT | D20-WAT | 49-831 | 49-844 |
| 380 | W | WA-210-1 | K10-WAT | D10-WAT | 49-816 | 49-812 |
| 380 | W | WA-222-1 | K10-WAT | D10-WAT | 49-816 | 49-812 |
| 380 | W | WA-54-1 | K10-WAT | D10-WAT | 49-816 | 49-812 |
| 390 | W | WT-534-1 | K20-WAT | D20-WAT | 49-831 | 49-844 |
| 700 | T | HE-6A | | DG-1HK | | 49-800 |
| 800 | T | HE-7A | | DG-1HK | | 49-800 |
| 28 cc | W | WT-273B | K20-WAT | D20-WAT | 49-831 | 49-844 |
| 32 cc | W | WT-207-1 | K20-WAT | D20-WAT | 49-831 | 49-844 |
| 32 cc | W | WT-273-1 | K20-WAT | D20-WAT | 49-831 | 49-844 |
| 40 cc | W | WT-305-1 | K20-WAT | D20-WAT | 49-831 | 49-844 |
| 40 cc | W | WT-549-1 | K20-WAT | D20-WAT | 49-831 | 49-844 |
| 48 cc | W | WT-549 | K20-WAT | D20-WAT | 49-831 | 49-844 |
| 48 cc | W | WT-305-1 | K20-WAT | D20-WAT | 49-831 | 49-844 |
| A 432 | W | WT-131-1 | K10-WAT | D10-WAT | 49-816 | 49-812 |
| A 432 | W | WT-272-1 | K10-WAT | D10-WAT | 49-816 | 49-812 |
| A 438 | W | WT-131-1 | K10-WAT | D10-WAT | 49-816 | 49-812 |
| A 438 | W | WT-272-1 | K10-WAT | D10-WAT | 49-816 | 49-812 |
| Euro 45 | W | WT-525-1 | K20-WAT | D20-WAT | 49-831 | 49-844 |
| HT-55 | W | WYJ-397-1 | K20-WYJ | D20-WYJ | 49-882 | |
| P 34 | W | WT-131-1 | K10-WAT | D10-WAT | 49-816 | 49-812 |
| P 34 | W | WT-272-1 | K10-WAT | D10-WAT | 49-816 | 49-812 |
| P 360 | W | WT-718-1 | K20-WAT | D20-WAT | 49-831 | 49-844 |
| P 400 | W | WT-429-1 | K20-WAT | D10-WAT | 49-831 | 49-812 |
| P 400 | W | WT-368-1 | K20-WAT | D10-WAT | 49-831 | 49-812 |
| P 400 | W | WT-443-1 | K20-WAT | D10-WAT | 49-831 | 49-812 |
| P 400 | W | WT-429-1 | K20-WAT | D10-WAT | 49-831 | 49-812 |
| P 410 | W | WT-718-1 | K20-WAT | D20-WAT | 49-831 | 49-844 |
| P 450 | W | WT-368-1 | K20-WAT | D10-WAT | 49-831 | 49-812 |
| P 450 | W | WT-429-1 | K20-WAT | D10-WAT | 49-831 | 49-812 |
| P 450 | W | WT-443-1 | K20-WAT | D10-WAT | 49-831 | 49-812 |
| P-350 | W | WT-731-1 | K20-WAT | D20-WAT | 49-831 | 49-844 |
| P400 | W | WT-717-1 | K20-WAT | D20-WAT | 49-831 | 49-844 |
| P450 | W | WT-717-1 | K20-WAT | D20-WAT | 49-831 | 49-844 |
| P70 | T | HS-158E | RK-23HS | DG-5HS | 49-803 | 49-802 |
| Prof 56 | W | HDA-141-1 | K20-HDA | D10-HDA | 49-845 | |
| STAR 22 | W | WYJ-283A-1 | K20-WYJ | D20-WYJ | 49-882 | |
| STAR 31 | W | WYJ-283A | K20-WYJ | D20-WYJ | 49-882 | |
| STAR 31 | W | WYJ-304-1 | K20-WYJ | D20-WYJ | 49-882 | |
| STAR 36 | W | WYJ-284A | K20-WYJ | D20-WYJ | 49-882 | |
| STAR 41 | W | WYJ-284-1 | K20-WYJ | D20-WYJ | 49-882 | |
| STAR 45 | W | WYJ-300-1 | K20-WYJ | D20-WYJ | 49-882 | |
| STAR 45 | W | WYK-174-1 | K21-WYK | D21-WYK | | |
| STAR 45 | W | WYJ-309-1 | K20-WYJ | D20-WYJ | 49-882 | |
| STAR 55 | W | WYJ-309 | K20-WYJ | D20-WYJ | 49-882 | |
| STAR 55 | W | WYJ-301-1 | K20-WYJ | D20-WYJ | 49-882 | |
| STAR22 | W | WYJ-400-1 | K20-WYJ | D20-WYJ | 49-882 | |
| STAR22 | W | WYJ-400-1 | K20-WYJ | D20-WYJ | 49-882 | |
| STAR26 | W | WYJ-400-1 | K20-WYJ | D20-WYJ | 49-882 | |
| STAR26 | W | WYJ-400-1 | K20-WYJ | D20-WYJ | 49-882 | |
| STAR36 | W | WYJ-317-1 | K20-WYJ | D20-WYJ | 49-882 | |
| STAR45 | W | WT-761-1 | K20-WAT | D20-WAT | 49-831 | 49-844 |
| STAR45 | W | WYK-213-1 | K21-WYK | D21-WYK | | |
| STAR55 | W | WYK-213-1 | K21-WYK | D21-WYK | | |
| STAR55 | W | WT-761-1 | K20-WAT | D20-WAT | 49-831 | 49-844 |
| STAR55 | W | WYK-174-1 | K21-WYK | D21-WYK | | |
| TS-60 | W | WYJ-397-1 | K20-WYJ | D20-WYJ | 49-882 | |
| Unspecified | W | WYJ-398-1 | K20-WYJ | D20-WYJ | 49-882 | |
| VIP 21 | W | WT-260-1 | K20-WAT | D10-WAT | 49-831 | 49-812 |

| OEM ENGINE/UNIT | | WALBRO CARBURETOR | | | OREGON | |
|---|---|---|---|---|---|---|
| Model | Carb | № | Kit | Gaskets | Kit | Gaskets |
| **Active** | | | | | | |
| VIP 25 | W | WT-260-1 | K20-WAT | D10-WAT | 49-831 | 49-812 |
| VIP 25 | W | WT-543-1 | K20-WAT | D20-WAT | 49-831 | 49-844 |
| VIP 30 | W | WT-543-1 | K20-WAT | D20-WAT | 49-831 | 49-844 |
| VIP 30 | W | WT-273-1 | K20-WAT | D20-WAT | 49-831 | 49-844 |
| VIP 34 | W | WT-273-1 | K20-WAT | D20-WAT | 49-831 | 49-844 |
| VIP 34 | W | WT-544-1 | K20-WAT | D20-WAT | 49-831 | 49-844 |
| VIP 42 | W | WT-544-1 | K20-WAT | D20-WAT | 49-831 | 49-844 |
| VIP 52 | W | WT-545-1 | K20-WAT | D20-WAT | 49-831 | 49-844 |
| VIP52 | W | WT-720-1 | K20-WAT | D20-WAT | 49-831 | 49-844 |
| WS437 | W | WT-727-1 | K20-WAT | D20-WAT | 49-831 | 49-844 |
| WS480 | W | WT-727-1 | K20-WAT | D20-WAT | 49-831 | 49-844 |
| **Atlas** | | | | | | |
| FB 60 | W | WT-232-1 | K10-WAT | D10-WAT | 49-816 | 49-812 |
| FB 60 | W | WT-284-1 | K10-WAT | D10-WAT | 49-816 | 49-812 |
| P 95 | W | HDA-148-1 | K20-HDA | D10-HDA | 49-845 | |
| **Berema Breaker** | | | | | | |
| 185cc | W | HDA-215-1 | K20-HDA | D20-HDA | 49-845 | 49-835 |
| **Blue Bird** | | | | | | |
| 23 | W | WT-101-1 | K10-WAT | D10-WAT | 49-816 | 49-812 |
| 27 | W | WT-101-1 | K10-WAT | D10-WAT | 49-816 | 49-812 |
| 31 | W | WT-101-1 | K10-WAT | D10-WAT | 49-816 | 49-812 |
| 38 | W | WT-101-1 | K10-WAT | D10-WAT | 49-816 | 49-812 |
| 38 cc | W | WT-161-1 | K10-WAT | D10-WAT | 49-816 | 49-812 |
| EBC 27 E | W | WZ-17-1 | K10-WZ | D10-WZ | 49-877 | 49-848 |
| EBC 27 E | W | WZ-35-1 | K10-WZ | D10-WZ | 49-877 | 49-848 |
| K 25 | W | WT-364-1 | K10-WAT | D10-WAT | 49-816 | 49-812 |
| K 25 | W | WYK-22-1 | K22-WYK | D22-WYK | | |
| K 25 | W | WYK-41-1 | K20-WYK | D20-WYK | | |
| K 25 | W | WYK-57-1 | K21-WYK | D21-WYK | | |
| K 29 | W | WYK-22-1 | K22-WYK | D22-WYK | | |
| K 29 | W | WYK-57-1 | K21-WYK | D21-WYK | | |
| K 29 | W | WYK-41-1 | K20-WYK | D20-WYK | | |
| K 29 | W | WT-364-1 | K10-WAT | D10-WAT | 49-816 | 49-812 |
| M 27 | W | WT-364-1 | K10-WAT | D10-WAT | 49-816 | 49-812 |
| M 34 | W | WT-364-1 | K10-WAT | D10-WAT | 49-816 | 49-812 |
| M 34 | W | WT-432-1 | K10-WAT | D10-WAT | 49-816 | 49-812 |
| M 41 | W | WT-362-1 | K10-WAT | D10-WAT | 49-816 | 49-812 |
| M 41 | W | WT-397-1 | K10-WAT | D10-WAT | 49-816 | 49-812 |
| M 47 | W | WT-397-1 | K10-WAT | D10-WAT | 49-816 | 49-812 |
| M 47 | W | WT-362-1 | K10-WAT | D10-WAT | 49-816 | 49-812 |
| M 54 | W | WT-362-1 | K10-WAT | D10-WAT | 49-816 | 49-812 |
| M 54 | W | WT-397-1 | K10-WAT | D10-WAT | 49-816 | 49-812 |
| N 39 E | W | WYK-27-1 | K22-WYK | D22-WYK | | |
| N 39 E | W | WYK-41-1 | K20-WYK | D20-WYK | | |
| N 39 E | W | WYK-42-1 | K20-WYK | D20-WYK | | |
| N 39 E | W | WYK-58-1 | K21-WYK | D21-WYK | | |
| N 39 E | W | WT-190-1 | K10-WAT | D10-WAT | 49-816 | 49-812 |
| N 45 | W | WYK-42-1 | K20-WYK | D20-WYK | | |
| N 45 E | W | WT-190-1 | K10-WAT | D10-WAT | 49-816 | 49-812 |
| N 45 E | W | WYK-58-1 | K21-WYK | D21-WYK | | |
| N 45 E | W | WYK-58-1 | K21-WYK | D21-WYK | | |
| N 45 E | W | WT-143-1 | K10-WAT | D10-WAT | 49-816 | 49-812 |
| N 52 E | W | WT-143-1 | K10-WAT | D10-WAT | 49-816 | 49-812 |
| N 52 E | W | WT-190-1 | K10-WAT | D10-WAT | 49-816 | 49-812 |
| N 52 E | W | WYK-42-1 | K20-WYK | D20-WYK | | |
| N 52 E | W | WYK-58-1 | K21-WYK | D21-WYK | | |
| N 52 E | W | WYK-27-1 | K22-WYK | D22-WYK | | |
| NBC 31 | W | WZ-17-1 | K10-WZ | D10-WZ | 49-877 | 49-848 |
| NBC 38 E | W | WZ-17-1 | K10-WZ | D10-WZ | 49-877 | 49-848 |
| NPM 31E | W | WZ-17-1 | K10-WZ | D10-WZ | 49-877 | 49-848 |
| P27 | W | WT-741-1 | K10-WAT | D10-WAT | 49-816 | 49-812 |
| P33 | W | WT-741-1 | K10-WAT | D10-WAT | 49-816 | 49-812 |
| P34 | W | WT-741-1 | K10-WAT | D10-WAT | 49-816 | 49-812 |
| SBC 23 E | W | WZ-17-1 | K10-WZ | D10-WZ | 49-877 | 49-848 |

CARB = Original OEM Carburetor

**B** = Bing
**N** = Nikki
**T** = Tillotson
**TK** = Teiki
**W** = Walbro
**Z** = Zama

*** No model information available

C

# Carburetor Kit Application Chart

| OEM ENGINE/UNIT | | WALBRO CARBURETOR | | | OREGON | |
|---|---|---|---|---|---|---|
| Model | Carb | № | Kit | Gaskets | Kit | Gaskets |
| **Blue Bird** | | | | | | |
| SBC 23 E | W | WZ-35-1 | K10-WZ | D10-WZ | 49-877 | 49-848 |
| SEC 23 E | W | WZ-35-1 | K10-WZ | D10-WZ | 49-877 | 49-848 |
| SEC 23 E | W | WZ-17-1 | K10-WZ | D10-WZ | 49-877 | 49-848 |
| TBE 355 | W | WT-143-1 | K10-WAT | D10-WAT | 49-816 | 49-812 |
| Unspecified | W | WYJ-341-1 | K20-WYJ | D20-WYJ | 49-882 | |
| **Chrysler Outboard** | | | | | | |
| LMB Carburetor | W | LMB-215-1 | K5-LMB | G1-LM | | |
| LMB Carburetor | W | LMB-216-1 | K3-LMB | G1-LM | | |
| LMB Carburetor | W | LMB-229-1 | K5-LMB | G1-LM | | |
| **Cifarelli** | | | | | | |
| 680/688 | W | WYK-184-1 | K21-WYK | D21-WYK | | |
| C 3 | W | WT-33-1 | K10-WAT | D10-WAT | 49-816 | 49-812 |
| M 88 | W | WJ-17-1 | K10-WJ | D10-WJ | 49-873 | 49-843 |
| M 88 | W | WJ-17-1 | K10-WJ | D10-WJ | 49-873 | 49-843 |
| M 88 | W | WJ-37-1 | K10-WJ | D10-WJ | 49-873 | 49-843 |
| M 88 BL | W | WJ-37-1 | K10-WJ | D10-WJ | 49-873 | 49-843 |
| SC700 | W | WYK-206-1 | K21-WYK | D21-WYK | | |
| SC800 | W | WYK-229-1 | K21-WYK | D21-WYK | | |
| **Cub Cadet (See Ryobi)** | | | | | | |
| Curtis Dyna Sprayer | | | | | | |
| Insect Sprayer | W | WB-34-1 | K10-WB | D10-WB | 49-872 | 49-869 |
| Insect Sprayer | W | WA-114-1 | K10-WAT | D10-WAT | 49-816 | 49-812 |
| Insect Sprayer | W | WA-92-1 | K10-WAT | D10-WAT | 49-816 | 49-812 |
| Insect Sprayer | W | WB-26-1 | | | | |
| Insect Sprayer | W | WT-104-1 | K10-WAT | D10-WAT | 49-816 | 49-812 |
| Insect Sprayer | W | WT-105-1 | K10-WAT | D10-WAT | 49-816 | 49-812 |
| Cushman Golf Cart | W | | | | | |
| 222 Twin | W | WHG-44-1 | K1-WHG | 0 | | |
| **Desa Chainsaw** | | | | | | |
| Mighty Mite 100 | W | WA-53-1 | K10-WAT | D10-WAT | 49-816 | 49-812 |
| Mighty Mite 200 | W | WA-53-1 | K10-WAT | D10-WAT | 49-816 | 49-812 |
| Mighty Mite 300 | W | WA-53-1 | K10-WAT | D10-WAT | 49-816 | 49-812 |
| Mighty Mite 400 | W | WA-54-1 | K10-WAT | D10-WAT | 49-816 | 49-812 |
| PL 4 | W | SDC-33-1 | K10-SDC | D10-SDC | 49-834 | 49-810 |
| **Dolmar** | | | | | | |
| 100 | W | WT-506-1 | K20-WAT | D10-WAT | 49-831 | 49-812 |
| 100 | W | WT-505-1 | K20-WAT | D10-WAT | 49-831 | 49-812 |
| 100 | W | WT-174-1 | K20-WAT | D10-WAT | 49-831 | 49-812 |
| 100 | W | WT-390-1 | K20-WAT | D10-WAT | 49-831 | 49-812 |
| 102 | W | WT-505-1 | K20-WAT | D10-WAT | 49-831 | 49-812 |
| 102 | W | WT-506-1 | K20-WAT | D10-WAT | 49-831 | 49-812 |
| 102 | W | WT-174-1 | K20-WAT | D10-WAT | 49-831 | 49-812 |
| 102 | W | WT-390-1 | K20-WAT | D10-WAT | 49-831 | 49-812 |
| 102 | W | WT-52-1 | K20-WAT | D10-WAT | 49-831 | 49-812 |
| 103 | W | WA-85-1 | K10-WAT | D10-WAT | 49-816 | 49-812 |
| 105 | W | WA-85-1 | K10-WAT | D10-WAT | 49-816 | 49-812 |
| 108 | W | WA-85-1 | K10-WAT | D10-WAT | 49-816 | 49-812 |
| 109 | W | WT-374-1 | K20-WAT | D10-WAT | 49-831 | 49-812 |
| 109 | W | WT-76-1 | K20-WAT | D10-WAT | 49-831 | 49-812 |
| 109 | W | WT-465-1 | K20-WAT | D10-WAT | 49-831 | 49-812 |
| 110 | T | HU-64D | RK-14HU | DG-3HU | 49-805 | 49-804 |
| 110 | W | WT-76-1 | K20-WAT | D10-WAT | 49-831 | 49-812 |
| 111 | W | WT-46-1 | K20-WAT | D10-WAT | 49-831 | 49-812 |
| 111 | W | WT-76-1 | K20-WAT | D10-WAT | 49-831 | 49-812 |
| 112 | T | HK-37A | | DG-1HK | | 49-800 |
| 115 | T | HU-83E | RK-14HU | DG-3HU | 49-805 | 49-804 |
| 115 | W | WT-61-1 | K20-WAT | D10-WAT | 49-831 | 49-812 |
| 115 | W | WT-76-1 | K20-WAT | D10-WAT | 49-831 | 49-812 |
| 115 | W | WT-76-1 | K20-WAT | D10-WAT | 49-831 | 49-812 |
| 116 | W | HDA-23-1 | K20-HDA | D10-HDA | 49-845 | |
| 117 | T | HK-37A | | DG-1HK | | 49-800 |

CARB = Original OEM Carburetor

**B** = Bing
**N** = Nikki
**T** = Tillotson
**TK** = Teiki
**W** = Walbro
**Z** = Zama

*** No model information available

| OEM ENGINE/UNIT | | WALBRO CARBURETOR | | | OREGON | |
|---|---|---|---|---|---|---|
| Model | Carb | № | Kit | Gaskets | Kit | Gaskets |
| **Dolmar** | | | | | | |
| 120 | T | HS-236E | RK-23HS | DG-5HS | 49-803 | 49-802 |
| 120 | W | HDA-22-1 | K20-HDA | D10-HDA | 49-845 | |
| 166 | W | WB-17-1 | K10-WB | D10-WB | 49-872 | 49-869 |
| 166 | W | WB-25-1 | K11-WB | D11-WB | | 49-871 |
| 340 | W | WT-375-1 | K20-WAT | D10-WAT | 49-831 | 49-812 |
| 340 | W | WT-466-1 | K20-WAT | D10-WAT | 49-831 | 49-812 |
| 340 | W | WT-507-1 | K20-WAT | D10-WAT | 49-831 | 49-812 |
| 400 | W | WT-507-1 | K20-WAT | D10-WAT | 49-831 | 49-812 |
| 400 | W | WT-466-1 | K20-WAT | D10-WAT | 49-831 | 49-812 |
| 400 | W | WT-375-1 | K20-WAT | D10-WAT | 49-831 | 49-812 |
| 166 - 158 | W | WB-17-1 | K10-WB | D10-WB | 49-872 | 49-869 |
| 181 chain Saw | Z | C1Q-DM13 | RB-119 | GND-27 | | 49-909 |
| 181 chain Saw | Z | C1Q-DM14 | RB-119 | GND-27 | | 49-909 |
| BC 250 | W | WT-39-1 | K20-WAT | D10-WAT | 49-831 | 49-812 |
| BC 250 | W | WT-73-1 | K20-WAT | D10-WAT | 49-831 | 49-812 |
| BC 330 | W | WT-9-1 | K20-WAT | D10-WAT | 49-831 | 49-812 |
| BC 400 | W | WT-183-1 | K20-WAT | D10-WAT | 49-831 | 49-812 |
| BC 400 | W | WT-56-1 | K20-WAT | D10-WAT | 49-831 | 49-812 |
| DCS230 | W | WYL-215-1 | K20-WYL | D11-WYL | | |
| DCS230T | W | WYL-230-1 | K20-WYL | D11-WYL | | |
| Farmer | W | WT-387-1 | K20-WAT | D10-WAT | 49-831 | 49-812 |
| FS 384 | W | WT-225-1 | K20-WAT | D10-WAT | 49-831 | 49-812 |
| FS 385 | W | WT-225-1 | K20-WAT | D10-WAT | 49-831 | 49-812 |
| LT 250 | W | WT-39-1 | K20-WAT | D10-WAT | 49-831 | 49-812 |
| LT 250 | W | WT-73-1 | K20-WAT | D10-WAT | 49-831 | 49-812 |
| MS-30 | Z | C1U-DM4 | RB-20 | GND-12 | 49-864 | 49-851 |
| PC6412 | W | WJ-105-1 | K14-WJ | D12-WJ | | |
| PC-7314 | W | WJ-105-1 | K14-WJ | D12-WJ | | |
| PowerCut | T | HS-239D | RK-23HS | DG-5HS | 49-803 | 49-802 |
| PS220TH | W | WYL-230-1 | K20-WYL | D11-WYL | | |
| PS-34 C.S. w/primer | Z | C1Q-DM6 | RB-72 | GND-35 | | |
| PS-34 chain Saw | Z | C1Q-DM9 | RB-72 | GND-35 | | |
| PS-34 chain Saw EPA | Z | C1Q-DM8 | RB-72 | GND-35 | | |
| PS-34 CS. w/o primer | Z | C1Q-DM7 | RB-72 | GND-35 | | |
| PS-340 | Z | C1Q-DM1 | RB-72 | GND-35 | | |
| PS-34chainSaw | Z | C1Q-DM10 | RB-72 | GND-35 | | |
| PS-540 | W | WT-76-1 | K20-WAT | D10-WAT | 49-831 | 49-812 |
| PS6400 | Z | C3M-DM11 | RB-101 | GND-63 | | |
| PS6400 | Z | C3M-DM12 | RB-101 | GND-63 | | |
| PS7900 | Z | C3M-DM11 | RB-101 | GND-63 | | |
| PS7900 | Z | C3M-DM12 | RB-101 | GND-63 | | |
| Unspecified | W | WT-37-1 | K10-WAT | D10-WAT | 49-816 | 49-812 |
| Vibramoter 55 | W | WT-76-1 | K20-WAT | D10-WAT | 49-831 | 49-812 |
| **Dynamic** | | | | | | |
| 23 cc | W | WT-511-1 | K10-WAT | D10-WAT | 49-816 | 49-812 |
| 23 cc | W | WT-524-1 | K10-WAT | D10-WAT | 49-816 | 49-812 |
| Echo | | | | | | |
| 3100 | W | WT-357-1 | K10-WAT | D10-WAT | 49-816 | 49-812 |
| 280E,EVLP | Z | C1S-K1 | RB-13 | GND-7 | | 49-859 |
| 290E,EVLP | Z | C1S-K1 | RB-13 | GND-7 | | 49-859 |
| 401 EVL | W | WA-96-1 | K10-WAT | D10-WAT | 49-816 | 49-812 |
| AT 250 | W | WY-57-1 | K10-WY | D10-WY | 49-875 | 49-839 |
| AT-200G | Z | C1U-K15 | RB-21 | GND-18 | 49-822-0 | |
| AT203G | Z | C1U-K53 | RB-64 | GND-41 | 49-900 | |
| AT203G | Z | C1U-K59 | RB-64 | GND-41 | 49-900 | |
| CG 24 E | W | WYJ-249-1 | k20-WYJ | D20-WYJ | 49-882 | |
| CLS-5000 | W | WYK-173-1 | K21-WYK | D21-WYK | | |
| CLS-5800 | Z | C3M-K33 | RB-53 | GND-26 | | |
| CLS-580X | Z | C3M-K74 | RB-116 | GND-62 | | |
| CLSB 4600 | W | WT-120-1 | K10-WAT | D10-WAT | 49-816 | 49-812 |
| CS 1001 | W | SDC-52-1 | K10-SDC | D10-SDC | 49-834 | 49-810 |
| CS 1001 VL | W | SDC-52-1 | K10-SDC | D10-SDC | 49-834 | 49-810 |
| CS 1001 VL | W | SDC-76-1 | K10-SDC | D10-SDC | 49-834 | 49-810 |
| CS 1100 VL | W | SDC-84-1 | K10-SDC | D10-SDC | 49-834 | 49-810 |
| CS 1160 VL | W | SDC-84-1 | K10-SDC | D10-SDC | 49-834 | 49-810 |
| CS 221 | W | WYL-8-1 | K20-WYL | D11-WYL | | |
| CS 2600 | W | WT-584-1 | K20-WAT | D20-WAT | 49-831 | 49-844 |
| CS 2600 T | W | WT-584-1 | K20-WAT | D20-WAT | 49-831 | 49-844 |
| CS 2800 | W | WYP-4A | K20-WYMP | D20-WYMP | | |
| CS 281 | W | WT-68-1 | K10-WAT | D10-WAT | 49-816 | 49-812 |
| CS 281 EVL | W | WA-108-1 | K10-WAT | D10-WAT | 49-816 | 49-812 |
| CS 282 | W | WT-35-1 | K10-WAT | D10-WAT | 49-816 | 49-812 |
| CS 3000 | W | WT-248-1 | K10-WAT | D10-WAT | 49-816 | 49-812 |
| CS 3000 | W | WT-317-1 | K10-WAT | D10-WAT | 49-816 | 49-812 |
| CS 3000 | W | WT-402-1 | K20-WAT | D10-WAT | 49-831 | 49-812 |
| CS 3000 | W | WT-589-1 | K20-WAT | D10-WAT | 49-831 | 49-812 |
| CS 301 | W | WT-589-1 | K20-WAT | D10-WAT | 49-831 | 49-812 |

C

# Carburetor Kit Application Chart

| OEM ENGINE/UNIT | | WALBRO CARBURETOR | | | OREGON | |
|---|---|---|---|---|---|---|
| Model | Carb | № | Kit | Gaskets | Kit | Gaskets |
| **Dynamic** | | | | | | |
| CS 302 (RM-401) | W | WA-5-1 | K10-WAT | D10-WAT | 49-816 | 49-812 |
| CS 302 S | W | WA-5-1 | K10-WAT | D10-WAT | 49-816 | 49-812 |
| CS 304 VL | W | WA-33-1 | K10-WAT | D10-WAT | 49-816 | 49-812 |
| CS 3050 | W | WT-254-1 | K10-WAT | D10-WAT | 49-816 | 49-812 |
| CS 3100 | W | WT-381-1 | K10-WAT | D10-WAT | 49-816 | 49-812 |
| CS 3100 | W | WT-385-1 | K10-WAT | D10-WAT | 49-816 | 49-812 |
| CS 315 | W | WA-32-1 | K10-WAT | D10-WAT | 49-816 | 49-812 |
| CS 315 | W | WA-33-1 | K10-WAT | D10-WAT | 49-816 | 49-812 |
| CS 340 EVL | W | WA-75-1 | K10-WAT | D10-WAT | 49-816 | 49-812 |
| CS 3400 | W | WT-271-1 | K10-WAT | D10-WAT | 49-816 | 49-812 |
| CS 3400 | W | WT-356-1 | K10-WAT | D10-WAT | 49-816 | 49-812 |
| CS 3400 | W | WT-381-1 | K10-WAT | D10-WAT | 49-816 | 49-812 |
| CS 3400 | W | WT-402-1 | K20-WAT | D10-WAT | 49-831 | 49-812 |
| CS 3400 | W | WT-385-1 | K10-WAT | D10-WAT | 49-816 | 49-812 |
| CS 3400 T | W | WT-358-1 | K10-WAT | D10-WAT | 49-816 | 49-812 |
| CS 3450 | W | WT-261-1 | K10-WAT | D10-WAT | 49-816 | 49-812 |
| CS 3450 | W | WT-402-1 | K20-WAT | D10-WAT | 49-831 | 49-812 |
| CS 351 VL | W | WA-25-1 | K10-WAT | D10-WAT | 49-816 | 49-812 |
| CS 3600 | W | WT-88-1 | K10-WAT | D10-WAT | 49-816 | 49-812 |
| CS 361 | W | WA-196-1 | K10-WAT | D10-WAT | 49-816 | 49-812 |
| CS 361 EVL | W | WA-137-1 | K10-WAT | D10-WAT | 49-816 | 49-812 |
| CS 362 EVL | W | WA-137-1 | K10-WAT | D10-WAT | 49-816 | 49-812 |
| CS 3900 | W | WT-118-1 | K20-WAT | D10-WAT | 49-831 | 49-812 |
| CS 3900 | W | WT-127-1 | K20-WAT | D10-WAT | 49-831 | 49-812 |
| CS 400 EVL | W | WA-93-1 | K10-WAT | D10-WAT | 49-816 | 49-812 |
| CS 4400 | W | WT-416-1 | K20-WAT | D10-WAT | 49-831 | 49-812 |
| CS 441 | W | WA-133-1 | K10-WAT | D10-WAT | 49-816 | 49-812 |
| CS 452 VL | W | WA-38-1 | K10-WAT | D10-WAT | 49-816 | 49-812 |
| CS 500 EVL | W | HDA-3-1 | K20-HDA | D10-HDA | 49-845 | |
| CS 500 EVLP | W | HDA-3-1 | K20-HDA | D10-HDA | 49-845 | |
| CS 500 VL | W | HDA-3-1 | K20-HDA | D10-HDA | 49-845 | |
| CS 500 VL | W | HDB-9-1 | K10-HDB | D10-HDB | 49-832 | 49-806 |
| CS 500 VLP | W | HDA-3-1 | K20-HDA | D10-HDA | 49-845 | |
| CS 500 VLP | W | HDB-9-1 | K10-HDB | D10-HDB | 49-832 | 49-806 |
| CS 5000 | W | HDA-82-1 | K20-HDA | D10-HDA | 49-845 | |
| CS 5000 | W | HDA-145-1 | K12-HDA | D11-HDA | | |
| CS 501 VL | W | HDB-3-1 | K10-HDB | D10-HDB | 49-832 | 49-806 |
| CS 502 EVL | W | HDB-3-1 | K10-HDB | D10-HDB | 49-832 | 49-806 |
| CS 510 | W | WT-594-1 | K20-WAT | D20-WAT | 49-831 | 49-844 |
| CS 510 EVL | W | HDA-20-1 | K20-HDA | D10-HDA | 49-845 | |
| CS 510 EVL | W | HDA-20-1 | K20-HDA | D10-HDA | 49-845 | |
| CS 5100 | W | WT-575-1 | K20-WAT | D20-WAT | 49-831 | 49-844 |
| CS 5500 | W | HDA-53-1 | K12-HDA | D11-HDA | | |
| CS 551 | W | HDA-14-1 | K20-HDA | D10-HDA | 49-845 | |
| CS 60 S | W | WJ-22-1 | K11-WJ | D11-WJ | | |
| CS 601 TVL | W | HDA-7-1 | K20-HDA | D10-HDA | 49-845 | |
| CS 601 TVLA | W | HDA-7-1 | K20-HDA | D10-HDA | 49-845 | |
| CS 610 VL | W | SDC-70-1 | K10-SDC | D10-SDC | 49-834 | 49-810 |
| CS 650 EVL | W | HDB-10-1 | K10-HDB | D10-HDB | 49-832 | 49-806 |
| CS 650 EVL | W | HDB-11-1 | K10-HDB | D10-HDB | 49-832 | 49-806 |
| CS 650 EVL | W | HDB-12-1 | K10-HDB | D10-HDB | 49-832 | 49-806 |
| CS 651 EVL | W | HDB-11-1 | K10-HDB | D10-HDB | 49-832 | 49-806 |
| CS 660 EVL | W | HDB-17-1 | K10-HDB | D10-HDB | 49-832 | 49-806 |
| CS 660 EVL | W | HDB-17-1 | K10-HDB | D10-HDB | 49-832 | 49-806 |
| CS 660 EVLP | W | HDB-17-1 | K10-HDB | D10-HDB | 49-832 | 49-806 |
| CS 661 EVL | W | HDB-17-1 | K10-HDB | D10-HDB | 49-832 | 49-806 |
| CS 6700 | W | HDA-47-1 | K20-HDA | D10-HDA | 49-845 | |
| CS 6700 | W | HDA-76-1 | K20-HDA | D10-HDA | 49-845 | |
| CS 6700 | W | HDA-151-1 | K12-HDA | D11-HDA | | |
| CS 6701 | W | HDA-177-1 | K20-HDA | D11-HDA | 49-845 | |
| CS 6701 | W | HDA-179-1 | K22-HDA | D22-HDA | 49-853 | 49-852 |
| CS 6702 | W | HDA-202-1 | K12-HDA | D11-HDA | | |
| CS 702 EVL | W | SDC-70-1 | K10-SDC | D10-SDC | 49-834 | 49-810 |
| CS 702 VL | W | SDC-70-1 | K10-SDC | D10-SDC | 49-834 | 49-810 |
| CS 750 EVL | W | SDC-70-1 | K10-SDC | D10-SDC | 49-834 | 49-810 |
| CS 8000 | W | HDA-45-1 | K20-HDA | D10-HDA | 49-845 | |
| CS 8000 | W | HDA-63-1 | K20-HDA | D10-HDA | 49-845 | |
| CS 8000 | W | HDA-153-1 | K12-HDA | D11-HDA | | |
| CS 803 EVL | W | SDC-70-1 | K10-SDC | D10-SDC | 49-834 | 49-810 |
| CS 900 EVL | W | SDC-77-1 | K10-SDC | D10-SDC | 49-834 | 49-810 |
| CS-1200 | T | HS-266A | RK-23HS | DG-5HS | 49-803 | 49-802 |
| CS-2600 | W | WT-711-1 | K20-WAT | D20-WAT | 49-831 | 49-844 |
| CS-2600 | W | WT-696-1 | K20-WAT | D20-WAT | 49-831 | 49-844 |
| CS-2600 | W | WT-687-1 | K20-WAT | D20-WAT | 49-831 | 49-844 |
| CS-2600T | W | WT-687-1 | K20-WAT | D20-WAT | 49-831 | 49-844 |
| CS-260W | W | WT-646-1 | K24-WAT | D20-WAT | | 49-844 |
| CS-260W | W | WT-646-1 | K24-WAT | D20-WAT | | 49-844 |
| CS2700 | W | WT-646-1 | K24-WAT | D20-WAT | | 49-844 |
| CS2700 | W | WT-646-1 | K24-WAT | D20-WAT | | 49-844 |
| CS-2700ES | W | WT-697-1 | K20-WAT | D20-WAT | 49-831 | 49-844 |

| OEM ENGINE/UNIT | | WALBRO CARBURETOR | | | OREGON | |
|---|---|---|---|---|---|---|
| Model | Carb | № | Kit | Gaskets | Kit | Gaskets |
| **Dynamic** | | | | | | |
| CS-270W | W | WT-845-1 | K20-WAT | D20-WAT | 49-831 | 49-844 |
| CS-280E/EP | Z | C1S-K1 | RB-13 | GND-7 | | 49-859 |
| CS-320T | W | WT-698-1 | K20-WAT | D20-WAT | 49-831 | 49-844 |
| CS-332 | Z | C1S-K6 | RB-9 | GND-5 | | 49-895 |
| CS-350T | W | WT-644-1 | K24-WAT | D20-WAT | | 49-844 |
| CS-350T | W | WT-622-1 | K20-WAT | D20-WAT | 49-831 | 49-844 |
| CS-350T | W | WT-699-1 | K20-WAT | D20-WAT | 49-831 | 49-844 |
| CS-350W | W | WT-721-1 | K20-WAT | D20-WAT | 49-831 | 49-844 |
| CS-350W | W | WT-722-1 | K20-WAT | D20-WAT | 49-831 | 49-844 |
| CS-350WES | W | WT-792-1 | K10-WAT | D10-WAT | 49-816 | 49-812 |
| CS-370 | W | WT-794-1 | K10-WAT | D10-WAT | 49-816 | 49-812 |
| CS-4100 | Z | C3-K5 | RB-43 | GND-19 | | |
| CS-4600 | Z | C3-K5 | RB-43 | GND-19 | | |
| CS-5100 | Z | C1Q-K79 | RB-56 | GND-57 | | |
| CS-60 | T | HS-25A | RK-23HS | DG-5HS | 49-803 | 49-802 |
| CS-900 | T | HS-215A | RK-23HS | DG-5HS | 49-803 | 49-802 |
| CSE3200 | W | WT-723-1 | K20-WAT | D20-WAT | 49-831 | 49-844 |
| CSE320T | W | WT-725-1 | K20-WAT | D20-WAT | 49-831 | 49-844 |
| CSE3500 | W | WT-724-1 | K20-WAT | D20-WAT | 49-831 | 49-844 |
| CST 610 EVL | W | HDA-7-1 | K20-HDA | D10-HDA | 49-845 | |
| CST 610 EVLP | W | HDA-7-1 | K20-HDA | D10-HDA | 49-845 | |
| CSV 281 | W | WYP-3-1 | K20-WYMP | D20-WYMP | | |
| CSV 3201 | W | WT-568-1 | K20-WAT | D20-WAT | 49-831 | 49-844 |
| CSV 3400 | W | WT-504-1 | K20-WAT | D10-WAT | 49-831 | 49-812 |
| CSV 3401 | W | WT-568-1 | K20-WAT | D20-WAT | 49-831 | 49-844 |
| CSV 3501 | W | WT-567-1 | K20-WAT | D20-WAT | 49-831 | 49-844 |
| CSV 361 | W | WT-86-1 | K10-WAT | D10-WAT | 49-816 | 49-812 |
| CSV 3701 | W | WT-567-1 | K20-WAT | D20-WAT | 49-831 | 49-844 |
| CSV 381 | W | WT-119-1 | K20-WAT | D10-WAT | 49-831 | 49-812 |
| CSV 3900 | W | WT-306-1 | K20-WAT | D10-WAT | 49-831 | 49-812 |
| CSV 3901 | W | WT-567-1 | K20-WAT | D20-WAT | 49-831 | 49-844 |
| CSV 391 | W | HDA-28-1 | K20-HDA | D10-HDA | 49-845 | |
| CSV 4000 | W | WT-416-1 | K20-WAT | D10-WAT | 49-831 | 49-812 |
| CSV 4401 | W | WT-567-1 | K20-WAT | D20-WAT | 49-831 | 49-844 |
| CSV 4500 | W | HDA-28-1 | K20-HDA | D10-HDA | 49-845 | |
| CSV 4500 | W | HDA-28-1 | K20-HDA | D10-HDA | 49-845 | |
| CSV 451 | W | HDA-28-1 | K20-HDA | D10-HDA | 49-845 | |
| CSV 453 | W | HDA-82-1 | K20-HDA | D10-HDA | 49-845 | |
| CVS 4000 | W | WT-201-1 | K20-WAT | D20-WAT | 49-831 | 49-844 |
| CVS 4000 H | W | WT-201-1 | K20-WAT | D20-WAT | 49-831 | 49-844 |
| E 3 2200 | W | WY-28-1 | K10-WY | D10-WY | 49-875 | 49-839 |
| EB 260 T | W | WT-612-1 | K20-WAT | D20-WAT | 49-831 | 49-844 |
| ES 201 AD | W | WA-59-1 | K10-WAT | D10-WAT | 49-816 | 49-812 |
| ES 211 | Z | C1U-K62 | RB-64 | GND-41 | 49-900 | |
| ES-1000 | Z | C1U-K26 | RB-52 | GND-18 | | |
| ES-2000 | Z | C1U-K32 | RB-21 | GND-18 | 49-822-0 | |
| ES210 | Z | C1U-K78 | RB-125 | GND-68 | | |
| ES2100 | Z | C1U-K68 | RB-104 | GND-41 | | |
| ES-2100 | Z | C1U-K43 | RB-59 | GND-38 | 49-286 | |
| ES-230 | Z | RB-K67 | RB-112 | GND-52 | | |
| ES-230 | Z | RB-K71 | RB-107 | GND-52 | | |
| ES-231 | Z | RB-K61 | RB-88 | GND-52 | | |
| ES-231 | Z | RB-K67 | RB-112 | GND-52 | | |
| ES-231 | Z | RB-K71 | RB-107 | GND-52 | | |
| ES-2400 | Z | C1U-K44 | RB-59 | GND-38 | 49-286 | |
| ES255, | Z | RB-K85 | RB-123 | GND-66 | | |
| F 1 P | W | WA-46-1 | K10-WAT | D10-WAT | 49-816 | 49-812 |
| F 2 | W | WA-46-1 | K10-WAT | D10-WAT | 49-816 | 49-812 |
| G 1 | W | WA-46-1 | K10-WAT | D10-WAT | 49-816 | 49-812 |
| G 1 A | W | WA-80-1 | K10-WAT | D10-WAT | 49-816 | 49-812 |
| G 671 | W | HDA-85-1 | K20-HDA | D10-HDA | 49-845 | |
| G43L | W | WYK-191-1 | K21-WYK | D21-WYK | | |
| GE 200 V | W | WT-157-1 | K10-WAT | D10-WAT | 49-816 | 49-812 |
| GET 650 | W | HDA-69-1 | K20-HDA | D10-HDA | 49-845 | |
| GT 1000 | W | WA-168-1 | K10-WAT | D10-WAT | 49-816 | 49-812 |
| GT 1100 | W | WYL-1-1 | K20-WYL | D11-WYL | | |
| GT 1100 | W | WYL-2-1 | K20-WYL | D11-WYL | | |
| GT 1100 | W | WYL-10-1 | K20-WYL | D11-WYL | | |
| GT 160 | W | WA-123-1 | K10-WAT | D10-WAT | 49-816 | 49-812 |
| GT 160 A | W | WA-138-1 | K10-WAT | D10-WAT | 49-816 | 49-812 |

CARB = Original OEM Carburetor

**B** = Bing
**N** = Nikki
**T** = Tillotson
**TK** = Teiki
**W** = Walbro
**Z** = Zama

*** No model information available

# Carburetor Kit Application Chart

| OEM ENGINE/UNIT | | WALBRO CARBURETOR | | | OREGON | |
|---|---|---|---|---|---|---|
| Model | Carb | № | Kit | Gaskets | Kit | Gaskets |
| **Dynamic** | | | | | | |
| GT 200 B | W | WA-143-1 | K10-WAT | D10-WAT | 49-816 | 49-812 |
| GT 2101 | W | WYL-1-1 | K20-WYL | D11-WYL | | |
| GT 2200 | W | WY-18-1 | K10-WY | D10-WY | 49-875 | 49-839 |
| GT 2400 | W | WT-424-1 | K24-WAT | D22-WAT | | |
| GT200 | Z | C1U-K58 | RB-64 | GND-41 | 49-900 | |
| GT200 | Z | RB-K66 | RB-112 | GND-52 | | |
| GT2000 | Z | C1U-K52 | RB-64 | GND-41 | 49-900 | |
| GT-2000 | Z | C1U-K29 | RB-21 | GND-18 | 49-822-0 | |
| GT-2000 | Z | C1U-K41 | RB-62 | GND-40 | | |
| GT2000SB | Z | C1U-K52 | RB-64 | GND-41 | 49-900 | |
| GT201 | Z | RB-K66 | RB-112 | GND-52 | | |
| GT2100 | Z | C1U-K52 | RB-64 | GND-41 | 49-900 | |
| GT-2100 | Z | C1U-K4 | RB-21 | GND-18 | 49-822-0 | |
| GT-2103 | Z | C1U-K12 | RB-27 | GND-17 | 49-897 | 49-880 |
| GT-2400 | Z | C1U-K39 | RB-62 | GND-40 | | |
| GTB 1100 | W | WYL-6-1 | K20-WYL | D11-WYL | | |
| GTB 2101 | W | WYL-6-1 | K20-WYL | D11-WYL | | |
| GTL 140 | W | WA-68-1 | K10-WAT | D10-WAT | 49-816 | 49-812 |
| H 1 | W | WA-81-1 | K10-WAT | D10-WAT | 49-816 | 49-812 |
| H 1 AH | W | WA-100-1 | K20-WAT | D20-WAT | 49-831 | 49-844 |
| H 1 AM | W | WA-100-1 | K20-WAT | D20-WAT | 49-831 | 49-844 |
| H 1 AT | W | WA-100-1 | K20-WAT | D20-WAT | 49-831 | 49-844 |
| HC 1001 | W | WYL-11-1 | K20-WYL | D11-WYL | | |
| HC 1001 | W | WYL-3-1 | K20-WYL | D11-WYL | | |
| HC 1001 | W | WYL-7-1 | K20-WYL | D11-WYL | | |
| HC 1001 | W | WYL-7-1 | K20-WYL | D11-WYL | | |
| HC 140 | W | WA-89-1 | K10-WAT | D10-WAT | 49-816 | 49-812 |
| HC 160 | W | WA-89-1 | K10-WAT | D10-WAT | 49-816 | 49-812 |
| HC 1600 | Z | C1U-K47 | RB-64 | GND-41 | 49-900 | |
| HC 200 | W | WA-91-1 | K10-WAT | D10-WAT | 49-816 | 49-812 |
| HC 210 E | W | WA-148-1 | K10-WAT | D10-WAT | 49-816 | 49-812 |
| HC 2100 | W | WT-168-1 | K10-WAT | D10-WAT | 49-816 | 49-812 |
| HC 230 | W | WYJ-258-1 | K20-WYJ | D20-WYJ | 49-882 | |
| HC 260 | W | WYJ-251-1 | K20-WYJ | D20-WYJ | 49-882 | |
| HC 261 | W | WYJ-251-1 | K20-WYJ | D20-WYJ | 49-882 | |
| HC-1500 | Z | C1U-K10 | RB-21 | GND-17 | 49-822-0 | 49-880 |
| HC-1500 | Z | C1U-K17 | RB-23 | GND-12 | 49-283 | 49-851 |
| HC-1500 | Z | C1U-K27 | RB-23 | GND-12 | 49-283 | 49-851 |
| HC-1500 | Z | C1U-K45 | RB-27 | GND-17 | 49-897 | 49-880 |
| HC-1500 | Z | C1U-K51 | RB-64 | GND-41 | 49-900 | |
| HC160 | Z | RB-K66 | RB-112 | GND-52 | | |
| HC-1600 | Z | C1U-K7 | RB-21 | GND-18 | 49-822-0 | |
| HC-1600 | Z | C1U-K35 | RB-27 | GND-17 | 49-897 | 49-880 |
| HC-1600 | Z | C1U-K51 | RB-64 | GND-41 | 49-900 | |
| HC180 | Z | RB-K66 | RB-112 | GND-52 | | |
| HC200 | Z | RB-K66 | RB-112 | GND-52 | | |
| HC-2000 | Z | C1U-K18 A-B | RB-63 | GND-17 | | 49-880 |
| HC-2000 | Z | C1U-K35 | RB-27 | GND-17 | 49-897 | 49-880 |
| HC-2000 | Z | C1U-K45 | RB-27 | GND-17 | 49-897 | 49-880 |
| HC-2000 | Z | C1U-K51 | RB-64 | GND-41 | 49-900 | |
| HC-2100 | Z | C1U-K13 | RB-63 | GND-17 | | 49-880 |
| HC-2300 | Z | C1U-K13 | RB-63 | GND-17 | | 49-880 |
| HC-2400 | Z | C1U-K30 | RB-27 | GND-17 | 49-897 | 49-880 |
| HC-2400 | Z | C1U-K31 | RB-26 | GND-17 | 49-284 | 49-880 |
| HC-2400 | Z | C1U-K45 | RB-27 | GND-17 | 49-897 | 49-880 |
| HC-2400 | Z | C1U-K51 | RB-64 | GND-41 | 49-900 | |
| HC-2410 | Z | C1U-K30 | RB-27 | GND-17 | 49-897 | 49-880 |
| HC-2410 | Z | C1U-K31 | RB-26 | GND-17 | 49-284 | 49-880 |
| HC-2410 | Z | C1U-K51 | RB-64 | GND-41 | 49-900 | |
| HCA 260 | W | WYJ-259-1 | K20-WYJ | D20-WYJ | 49-882 | |
| HCA 261 | W | WYJ-276-1 | K20-WYJ | D20-WYJ | 49-882 | |
| HCR-1500 | Z | C1U-K83 | RB-136 | GND-75 | | |
| HT 200 | W | WA-81-1 | K10-WAT | D10-WAT | 49-816 | 49-812 |
| HTE60 | W | WYL-165-1 | K20-WYL | D11-WYL | | |
| HTE75 | W | WYL-165-1 | K20-WYL | D11-WYL | | |
| HTM 2 | W | WYJ-27-1 | K20-WYJ | D20-WYJ | 49-882 | |
| J/D 30S | Z | C1U-K21 | RB-27 | GND-17 | 49-897 | 49-880 |
| J/D 38B | Z | C1U-K22 | RB-27 | GND-17 | 49-897 | 49-880 |
| J/D21C | Z | C1U-K19 | RB-25 | GND-17 | | 49-880 |
| J/D21S | Z | C1U-K19 | RB-25 | GND-17 | | 49-880 |
| K 3 | W | WA-45-1 | K10-WAT | D10-WAT | 49-816 | 49-812 |

CARB = Original OEM Carburetor

**B** = Bing
**N** = Nikki
**T** = Tillotson
**TK** = Teiki
**W** = Walbro
**Z** = Zama

*** No model information available

| OEM ENGINE/UNIT | | WALBRO CARBURETOR | | | OREGON | |
|---|---|---|---|---|---|---|
| Model | Carb | № | Kit | Gaskets | Kit | Gaskets |
| **Dynamic** | | | | | | |
| KCJ CS-5100 | Z | C1Q-K64 | RB-56 | GND-57 | | |
| KEH 202 | W | WA-28-1 | K10-WAT | D10-WAT | 49-816 | 49-812 |
| LE 25 | W | WT-606-1 | K20-WAT | D20-WAT | 49-831 | 49-844 |
| PAS-231 | Z | RB-K63 | RB-81 | GND-48 | | |
| PB 200 | W | WA-66-1 | K10-WAT | D10-WAT | 49-816 | 49-812 |
| PB 210 E | W | WA-157-1 | K10-WAT | D10-WAT | 49-816 | 49-812 |
| PB 210 E | W | WT-409-1 | K20-WAT | D10-WAT | 49-831 | 49-812 |
| PB 2400 | W | WT-314-1 | K22-WAT | D22-WAT | | |
| PB 2400 | W | WT-417-1 | K20-WAT | D10-WAT | 49-831 | 49-812 |
| PB 2400 | W | WT-274-1 | K24-WAT | D22-WAT | | |
| PB 260 L | W | WYJ-257-1 | K20-WYJ | D20-WYJ | 49-882 | |
| PB 260 LN | W | WYJ-257-1 | K20-WYJ | D20-WYJ | 49-882 | |
| PB 300 E | W | WA-162-1 | K10-WAT | D10-WAT | 49-816 | 49-812 |
| PB 400 | W | WA-55-1 | K10-WAT | D10-WAT | 49-816 | 49-812 |
| PB 400 E | W | WA-55-1 | K10-WAT | D10-WAT | 49-816 | 49-812 |
| PB 400 E | W | WT-410-1 | K20-WAT | D10-WAT | 49-831 | 49-812 |
| PB 4500 | W | WA-191-306 | K10-WAT | D10-WAT | 49-816 | 49-812 |
| PB 4500 | W | WA-191-1 | K10-WAT | D10-WAT | 49-816 | 49-812 |
| PB 4500 | W | WYK-134-1 | K21-WYK | D21-WYK | | |
| PB 650 | W | WYK-150-1 | K21-WYK | D21-WYK | | |
| PB-1000 | Z | C1U-K11 | RB-21 | GND-18 | 49-822-0 | |
| PB-1000 | Z | C1U-K26 | RB-52 | GND-18 | | |
| PB-1010 | Z | C1U-K11 | RB-21 | GND-18 | 49-822-0 | |
| PB-1010 | Z | C1U-K14 | RB-21 | GND-18 | 49-822-0 | |
| PB-1010 | Z | C1U-K26 | RB-52 | GND-18 | | |
| PB201 | Z | C1U-K62 | RB-64 | GND-41 | 49-900 | |
| PB206 | W | WYK-190-1 | K21-WYK | D21-WYK | | |
| PB2100 | Z | C1U-K68 | RB-104 | GND-41 | | |
| PB-2100 | Z | C1U-K42 | RB-59 | GND-38 | 49-286 | |
| PB-230 | Z | RB-K72 | RB-107 | GND-52 | | |
| PB-231 | Z | RB-K72 | RB-107 | GND-52 | | |
| PB411 | W | WT-684-306 | K26-WAT | D26-WAT | | |
| PB-411 | W | WT-684-1 | K26-WAT | D26-WAT | | |
| PB-413 | Z | C1M-K77 | RB-124 | GND-67 | | |
| PB-4600 | Z | C1M-K24 | RB-44 | GND-31 | 49-903 | |
| PB-4600 | Z | C1M-K24 | RB-44 | GND-31 | 49-903 | |
| PB-4600 | Z | C1M-K37 | RB-61 | GND-31 | 49-906 | |
| PB6000 | Z | C1M-K49 | RB-44 | GND-31 | 49-903 | |
| PB-6000 | Z | C1M-K25 | RB-44 | GND-31 | 49-903 | |
| PB-6000 | Z | C1M-K25 | RB-44 | GND-31 | 49-903 | |
| PB-602 | Z | C1M-K49 | RB-44 | GND-31 | 49-903 | |
| PB-603 | Z | C1M-K49 | RB-44 | GND-31 | 49-903 | |
| PB-610 | Z | C1M-K49 | RB-44 | GND-31 | 49-903 | |
| PB-610 | Z | C1M-K76 | RB-44 | GND-31 | 49-903 | |
| PB-611 | Z | C1M-K49 | RB-44 | GND-31 | 49-903 | |
| PB-620 | Z | C1M-K76 | RB-44 | GND-31 | 49-903 | |
| PB-650R | W | WYK-180-1 | K21-WYK | D21-WYK | | |
| PB-750R | W | WYK-179-1 | K21-WYK | D21-WYK | | |
| PE-2000 | Z | C1U-K29 | RB-21 | GND-18 | 49-822-0 | |
| PE-231 | Z | RB-K63 | RB-81 | GND-48 | | |
| PPSR-231 | Z | RB-K57 | RB-81 | GND-48 | | |
| PPT 260 | W | WYJ-259-1 | K20-WYJ | D20-WYJ | 49-882 | |
| PPT-231 | Z | RB-K57 | RB-81 | GND-48 | | |
| PS200 | Z | C1U-K78 | RB-125 | GND-68 | | |
| PV 230LN | Z | RB-K60 | RB-88 | GND-52 | | |
| PV 231LN | Z | RB-K60 | RB-88 | GND-52 | | |
| PV-230LN | Z | RB-K65 | RB-112 | GND-52 | | |
| PV-231LN | Z | RB-K65 | RB-112 | GND-52 | | |
| RM 4000 | W | WYK-134-1 | K21-WYK | D21-WYK | | |
| RM 5000 | W | WYK-158-1 | K21-WYK | D21-WYK | | |
| RMA 253 | W | WZ-44-1 | K10-WZ | D10-WZ | 49-877 | 49-848 |
| RMAHB 212 | W | WYK-8-1 | K20-WYK | D20-WYK | | |
| RMHB 212 | W | WYK-8-1 | K20-WYK | D20-WYK | | |
| RS 202 | W | WA-21-1 | K10-WAT | D10-WAT | 49-816 | 49-812 |
| S 2 AP1 | W | WA-59-1 | K10-WAT | D10-WAT | 49-816 | 49-812 |
| S 2 AP2 | W | WA-59-1 | K10-WAT | D10-WAT | 49-816 | 49-812 |
| SHC 260 | W | WYJ-259-1 | K20-WYJ | D20-WYJ | 49-882 | |
| SHC 261 | W | WYJ-276-1 | K20-WYJ | D20-WYJ | 49-882 | |
| SHPA 703 | W | WYK-5-1 | K20-WYK | D20-WYK | | |
| SHPE 703 | W | WYL-4-1 | K20-WYL | D11-WYL | | |
| SHR-040 | Z | C1U-K8 | RB-21 | GND-18 | 49-822-0 | |
| SHR2100 | Z | C1U-K52 | RB-64 | GND-41 | 49-900 | |
| SHR2100 | Z | C1U-K58 | RB-64 | GND-41 | 49-900 | |
| SHR-2100 | Z | C1U-K34 | RB-26 | GND-17 | 49-284 | 49-880 |
| SHRE 041 | W | WYL-4-1 | K20-WYL | D11-WYL | | |
| SHRE 060 | W | WYL-4-1 | K20-WYL | D11-WYL | | |
| SMR2100 | Z | C1U-K58 | RB-64 | GND-41 | 49-900 | |
| SMR-2510 | Z | C1U-K20 | RB-26 | GND-17 | 49-284 | 49-880 |
| SRA 253 D | W | WZ-44-1 | K10-WZ | D10-WZ | 49-877 | 49-848 |

C

# Carburetor Kit Application Chart

| OEM ENGINE/UNIT | | WALBRO CARBURETOR | | | OREGON | |
|---|---|---|---|---|---|---|
| Model | Carb | № | Kit | Gaskets | Kit | Gaskets |
| **Dynamic** | | | | | | |
| SRE 240 | W | WYK-163-1 | K21-WYK | D21-WYK | | |
| SRE 242 | W | WYK-163-1 | K21-WYK | D21-WYK | | |
| SRM 140 DA | W | WA-46-1 | K10-WAT | D10-WAT | 49-816 | 49-812 |
| SRM 1500 | Z | C1U-K9 | RB-21 | GND-18 | 49-822-0 | |
| SRM 1501 | Z | C1U-K9 | RB-21 | GND-18 | 49-822-0 | |
| SRM 160 M | W | WA-161-1 | K10-WAT | D10-WAT | 49-816 | 49-812 |
| SRM 160 M | W | WZ-23-1 | K10-WZ | D10-WZ | 49-877 | 49-848 |
| SRM 190 | W | WA-132-1 | K10-WAT | D10-WAT | 49-816 | 49-812 |
| SRM 200 BE | W | WA-143-1 | K10-WAT | D10-WAT | 49-816 | 49-812 |
| SRM 200 DA | W | WA-59-1 | K10-WAT | D10-WAT | 49-816 | 49-812 |
| SRM 200 DB | W | WA-59-1 | K10-WAT | D10-WAT | 49-816 | 49-812 |
| SRM 2000 | W | WY-28-1 | K10-WY | D10-WY | 49-875 | 49-839 |
| SRM 2000 | W | WY-18-1 | K10-WY | D10-WY | 49-875 | 49-839 |
| SRM 2010 M | W | WZ-45-1 | K10-WZ | D10-WZ | 49-877 | 49-848 |
| SRM 202 | W | WA-21-1 | K10-WAT | D10-WAT | 49-816 | 49-812 |
| SRM 204 DE | W | WA-50-1 | K10-WAT | D10-WAT | 49-816 | 49-812 |
| SRM 205 | W | WA-81-1 | K10-WAT | D10-WAT | 49-816 | 49-812 |
| SRM 207 DE | W | WA-107-1 | K10-WAT | D10-WAT | 49-816 | 49-812 |
| SRM 209 PS | W | WZ-24-1 | K10-WZ | D10-WZ | 49-877 | 49-848 |
| SRM 210 AE | W | WA-143-1 | K10-WAT | D10-WAT | 49-816 | 49-812 |
| SRM 2200 | W | WY-18-1 | K10-WY | D10-WY | 49-875 | 49-839 |
| SRM 230 | W | WYK-70-1 | K21-WYK | D21-WYK | | |
| SRM 2300 | Z | C1U-K9 | RB-21 | GND-18 | 49-822-0 | |
| SRM 2400 | W | WYJ-220-1 | K20-WYJ | D20-WYL | 49-882 | |
| SRM 250 E | W | WA-163-1 | K10-WAT | D10-WAT | 49-816 | 49-812 |
| SRM 2500 | W | WY-20-1 | K10-WY | D10-WY | 49-875 | 49-839 |
| SRM 251 PS | W | WZ-25-1 | K10-WZ | D10-WZ | 49-877 | 49-848 |
| SRM 260 | W | WYJ-250-1 | K20-WYJ | D20-WYJ | 49-882 | |
| SRM 260 | W | WYK-70-1 | K21-WYK | D21-WYK | | |
| SRM 260 | W | WYJ-315-1 | K20-WYJ | D20-WYJ | 49-882 | |
| SRM 2601 | W | WYJ-192-1 | K20-WYJ | D20-WYJ | 49-882 | |
| SRM 2601 | W | WYJ-192-1 | K20-WYJ | D20-WYJ | 49-882 | |
| SRM 260L | W | WYK-186-1 | K13-WYK | D13-WYK | | |
| SRM 261 | W | WYJ-315-1 | K20-WYJ | D20-WYJ | 49-882 | |
| SRM 261L | W | WYK-186-1 | K13-WYK | D13-WYK | | |
| SRM 300 | W | WA-87-1 | K10-WAT | D10-WAT | 49-816 | 49-812 |
| SRM 300 AE | W | WA-141-1 | K10-WAT | D10-WAT | 49-816 | 49-812 |
| SRM 3000 | W | WY-21-1 | K10-WY | D10-WY | 49-875 | 49-839 |
| SRM 3010 | W | WY-21-1 | K10-WY | D10-WY | 49-875 | 49-839 |
| SRM 302 ADX | W | WA-7-1 | K10-WAT | D10-WAT | 49-816 | 49-812 |
| SRM 302 BDX | W | WA-131-1 | K10-WAT | D10-WAT | 49-816 | 49-812 |
| SRM 310 | W | WA-175-1 | K10-WAT | D10-WAT | 49-816 | 49-812 |
| SRM 3100 | W | WT-344-1 | K22-WAT | D22-WAT | | |
| SRM 3100 | W | WT-418-1 | K20-WAT | D10-WAT | 49-831 | 49-812 |
| SRM 3100 | W | WT-333-1 | K20-WAT | D20-WAT | 49-831 | 49-844 |
| SRM 311 | W | WYJ-275-1 | K20-WYJ | D20-WYJ | 49-882 | |
| SRM 311 | W | WYK-189-306 | K21-WYK | D21-WYK | | |
| SRM 311 | W | WYK-189-1 | K21-WYK | D21-WYK | | |
| SRM 3400 | W | WT-418-1 | K20-WAT | D10-WAT | 49-831 | 49-812 |
| SRM 3400 | W | WT-333-1 | K20-WAT | D20-WAT | 49-831 | 49-844 |
| SRM 3400 | W | WT-344-1 | K22-WAT | D22-WAT | | |
| SRM 3800 | W | WT-297-1 | K22-WAT | D22-WAT | | |
| SRM 3800 | W | WT-74-1 | K10-WAT | D10-WAT | 49-816 | 49-812 |
| SRM 3800 | W | WT-415-1 | K20-WAT | D10-WAT | 49-831 | 49-812 |
| SRM 400 | W | WYK-152-1 | K21-WYK | D21-WYK | | |
| SRM 400 AE | W | WA-142-1 | K10-WAT | D10-WAT | 49-816 | 49-812 |
| SRM 4000 | W | WYK-134-1 | K21-WYK | D21-WYK | | |
| SRM 400AE | W | WA-142-1 | K10-WAT | D10-WAT | 49-816 | 49-812 |
| SRM 402 DE | W | WA-106-1 | K10-WAT | D10-WAT | 49-816 | 49-812 |
| SRM 4600 | W | WT-77-1 | K10-WAT | D10-WAT | 49-816 | 49-812 |
| SRM 5000 | W | WYK-158-1 | K21-WYK | D21-WYK | | |
| SRM 501 | W | WA-39-1 | K10-WAT | D10-WAT | 49-816 | 49-812 |
| SRM200 | Z | RB-K66 | RB-112 | GND-52 | | |
| SRM201 | Z | RB-K66 | RB-112 | GND-52 | | |
| SRM2015 | Z | C1U-K53 | RB-64 | GND-41 | 49-900 | |
| SRM2100 | Z | C1U-K52 | RB-64 | GND-41 | 49-900 | |
| SRM-2100 | Z | C1U-K16 | RB-21 | GND-18 | 49-822-0 | |
| SRM-2100 | Z | C1U-K41 | RB-62 | GND-40 | | |
| SRM-2110 | Z | C1U-K16 | RB-21 | GND-18 | 49-822-0 | |
| SRM230 | Z | RB-K66 | RB-112 | GND-52 | | |
| SRM230 | Z | RB-K70 | RB-107 | GND-52 | | |
| SRM230 | Z | RB-K70 | RB-107 | GND-52 | | |
| SRM230 | Z | RB-K75 | RB-123 | GND-66 | | |
| SRM-2301 | Z | C1U-K12 | RB-27 | GND-17 | 49-897 | 49-880 |
| SRM2305 | Z | C1U-K53 | RB-64 | GND-41 | 49-900 | |
| SRM231 | Z | RB-K66 | RB-112 | GND-52 | | |
| SRM-2310 | Z | C1U-K12 | RB-27 | GND-17 | 49-897 | 49-880 |
| SRM-2400 | Z | C1U-K39 | RB-62 | GND-40 | | |
| SRM2455 | Z | C1U-K53 | RB-64 | GND-41 | 49-900 | |
| SRM-2501 | Z | C1U-K20 | RB-26 | GND-17 | 49-888-0 | 49-880 |
| SRM-2501S | Z | C1U-K20 | RB-26 | GND-17 | 49-888-0 | 49-880 |
| SRM-251 | Z | C1U-K81 | RB-71 | GND-44 | | |
| SRM255 | Z | RB-K84 | RB-139 | GND-66 | | |
| SRM2600 | Z | C1U-K36 | RB-48 | GND-18 | | |
| SRM-3000 | Z | C1U-K21 | RB-27 | GND-17 | 49-897 | 49-880 |
| SRM-330 | W | WYJ-312-1 | K20-WYJ | D20-WYJ | 49-882 | |
| SRM-3500ES | W | WYJ-373-1 | K20-WYJ | D20-WYJ | 49-882 | |
| SRM-3550 | Z | C1U-K30 | RB-27 | GND-17 | 49-897 | 49-880 |
| SRM3800 | Z | C1U-K22 | RB-27 | GND-17 | 49-897 | 49-880 |
| SRM-4300 | Z | C1Q-K73 | RB-113 | GND-61 | | |
| SRS-2100 | Z | C1U-K16 | RB-21 | GND-18 | 49-822-0 | |
| SV 3 | W | WA-51-1 | K10-WAT | D10-WAT | 49-816 | 49-812 |
| SV-4/B | Z | C1U-K27 | RB-23 | GND-12 | 49-283 | 49-851 |
| SV-4/B | Z | C1U-K27 | RB-23 | GND-12 | 49-283 | 49-851 |
| SV-4/E,B | Z | C1U-K46 | RB-65 | GND-38 | | |
| SV-4/E,B | Z | C1U-K54 | RB-71 | GND-44 | | |
| TC2100 | Z | C1U-K54 | RB-71 | GND-44 | | |
| TT-21A | Z | C1U-K16 | RB-21 | GND-18 | 49-822-0 | |
| Unspecified | W | WYL-180-1 | K20-WYL | D11-WYL | | |
| WP1000 | Z | C1U-K55 | RB-64 | GND-41 | 49-900 | |
| WP-1000 | Z | C1U-K28 | RB-48 | GND-18 | | |
| **Emab-Electrolux** | | | | | | |
| 33 | W | WT-79-1 | K20-WAT | D10-WAT | 49-831 | 49-812 |
| 33 | W | WT-98-1 | K20-WAT | D10-WAT | 49-831 | 49-812 |
| 360 | W | WT-67-1 | K20-WAT | D10-WAT | 49-831 | 49-812 |
| 360 | W | WT-79-1 | K20-WAT | D10-WAT | 49-831 | 49-812 |
| 360 | W | WT-98-1 | K20-WAT | D10-WAT | 49-831 | 49-812 |
| 370 | W | WT-79-1 | K20-WAT | D10-WAT | 49-831 | 49-812 |
| 370 | W | WT-98-1 | K20-WAT | D10-WAT | 49-831 | 49-812 |
| 370 | W | WT-67-1 | K20-WAT | D10-WAT | 49-831 | 49-812 |
| 410 | W | HDA-6-1 | K20-HDA | D10-HDA | 49-845 | |
| 420 | W | HDA-6-1 | K20-HDA | D10-HDA | 49-845 | |
| 435 | W | HDA-6-1 | K20-HDA | D10-HDA | 49-845 | |
| 440 | W | HDA-68-1 | K20-HDA | D10-HDA | 49-845 | |
| 450 | W | HDA-3-1 | K20-HDA | D10-HDA | 49-845 | |
| 450 | W | HDA-40-1 | K20-HDA | D10-HDA | 49-845 | |
| 490 | W | WA-121-1 | K10-WAT | D10-WAT | 49-816 | 49-812 |
| 490 | W | WA-158-1 | K10-WAT | D10-WAT | 49-816 | 49-812 |
| 510 | W | HDA-3-1 | K20-HDA | D10-HDA | 49-845 | |
| 520 | W | HDA-3-1 | K20-HDA | D10-HDA | 49-845 | |
| 525 | W | HDA-3-1 | K20-HDA | D10-HDA | 49-845 | |
| 535 | W | HDA-6-1 | K20-HDA | D10-HDA | 49-845 | |
| 949 | W | WA-158-1 | K10-WAT | D10-WAT | 49-816 | 49-812 |
| 1073 | W | WA-22-1 | K10-WAT | D10-WAT | 49-816 | 49-812 |
| 1074 | W | WA-22-1 | K10-WAT | D10-WAT | 49-816 | 49-812 |
| 2051 | W | HDA-68-1 | K20-HDA | D10-HDA | 49-845 | |
| 2077 | W | WJ-77-1 | K13-WJ | D10-WJ | | 49-843 |
| 225 R | W | WT-406-1 | K10-WAT | D10-WAT | 49-816 | 49-812 |
| 32 cc | W | WT-597-1 | K10-WAT | D10-WAT | 49-816 | 49-812 |
| 34 cc | W | WT-13-1 | K20-WAT | D10-WAT | 49-831 | 49-812 |
| 50 cc | W | WA-144-1 | K10-WAT | D10-WAT | 49-816 | 49-812 |
| A 55 | W | WJ-1-1 | K10-WJ | D10-WJ | 49-873 | 49-843 |
| A 55 | W | WS-10-1 | K10-WS | D10-WS | | 49-814 |
| CSI | W | WT-599-1 | K20-WAT | D20-WAT | 49-831 | 49-844 |
| F 1610 | W | WA-8-1 | K10-WAT | D10-WAT | 49-816 | 49-812 |
| F 1616 | W | WA-8-1 | K10-WAT | D10-WAT | 49-816 | 49-812 |
| F 55 | W | WJ-1-1 | K10-WJ | D10-WJ | 49-873 | 49-843 |
| F 55 | W | WS-10-1 | K10-WS | D10-WS | | 49-814 |
| F 65 | W | WJ-1-1 | K10-WJ | D10-WJ | 49-873 | 49-843 |
| F 65 | W | WS-10-1 | K10-WS | D10-WS | | 49-814 |
| Frontier Mark VI | W | WA-58-1 | K10-WAT | D10-WAT | 49-816 | 49-812 |
| GTI | W | WT-598-1 | K20-WAT | K10-WAT | 49-831 | |
| H 225 R | W | WT-421-1 | K10-WAT | D10-WAT | 49-816 | 49-812 |
| K 500 | W | WT-34-1 | K20-WAT | D10-WAT | 49-831 | 49-812 |
| K 540 | W | WT-353-1 | K20-WAT | D10-WAT | 49-831 | 49-812 |
| LP 5 | W | WA-27-1 | K10-WAT | D10-WAT | 49-816 | 49-812 |
| LT Series | W | MA-42-1 | XXX | XXXXX | | |
| Miltimot 100 | W | SDC-79-1 | K10-SDC | D10-SDC | 49-834 | 49-810 |

CARB = Original OEM Carburetor

**B** = Bing
**N** = Nikki
**T** = Tillotson
**TK** = Teiki
**W** = Walbro
**Z** = Zama

*** No model information available

C

# Carburetor Kit Application Chart

| OEM ENGINE/UNIT | | WALBRO CARBURETOR | | | OREGON | |
|---|---|---|---|---|---|---|
| Model | Carb | № | Kit | Gaskets | Kit | Gaskets |
| **Emab-Electrolux** | | | | | | |
| P 20 | W | WA-22-1 | K10-WAT | D10-WAT | 49-816 | 49-812 |
| P 25 | W | WA-22-1 | K10-WAT | D10-WAT | 49-816 | 49-812 |
| P 400 | W | WT-17-1 | K20-WAT | D10-WAT | 49-831 | 49-812 |
| P 400 | W | WT-8-1 | K20-WAT | D10-WAT | 49-831 | 49-812 |
| P 400 | W | WT-99-1 | K20-WAT | D10-WAT | 49-831 | 49-812 |
| P 41 | W | SDC-53-1 | K10-SDC | D10-SDC | 49-834 | 49-810 |
| P 42 | W | SDC-53-1 | K10-SDC | D10-SDC | 49-834 | 49-810 |
| P 42 | W | SDC-80-1 | K10-SDC | D10-SDC | 49-834 | 49-810 |
| P 42 | W | WJ-20-1 | K10-WJ | D10-WJ | 49-873 | 49-843 |
| P 42 | W | WJ-9-1 | K10-WJ | D10-WJ | 49-873 | 49-843 |
| P 42 T | W | WJ-13-1 | K10-WJ | D10-WJ | 49-873 | 49-843 |
| P 42 T | W | WJ-21-1 | K10-WJ | D10-WJ | 49-873 | 49-843 |
| P 442 | W | WT-8-1 | K20-WAT | D10-WAT | 49-831 | 49-812 |
| P 50 | W | SDC-53-1 | K10-SDC | D10-SDC | 49-834 | 49-810 |
| P 500 | W | WA-82-1 | K10-WAT | D10-WAT | 49-816 | 49-812 |
| P 5000 | W | WA-158-1 | K10-WAT | D10-WAT | 49-816 | 49-812 |
| P 5000 | W | WA-82-1 | K10-WAT | D10-WAT | 49-816 | 49-812 |
| P 51 | W | SDC-53-1 | K10-SDC | D10-SDC | 49-834 | 49-810 |
| P 52 | W | SDC-53-1 | K10-SDC | D10-SDC | 49-834 | 49-810 |
| P 52 | W | SDC-80-1 | K10-SDC | D10-SDC | 49-834 | 49-810 |
| P 52 | W | WJ-20-1 | K10-WJ | D10-WJ | 49-873 | 49-843 |
| P 52 | W | WJ-9-1 | K10-WJ | D10-WJ | 49-873 | 49-843 |
| P 52 T | W | WJ-13-1 | K10-WJ | D10-WJ | 49-873 | 49-843 |
| P 52 T | W | WJ-21-1 | K10-WJ | D10-WJ | 49-873 | 49-843 |
| P 55 | W | WJ-1-1 | K10-WJ | D10-WJ | 49-873 | 49-843 |
| P 55 | W | WS-18-1 | K10-WS | D10-WS | | 49-814 |
| P 550 | W | WJ-7-1 | K10-WJ | D10-WJ | 49-873 | 49-843 |
| P 5500 | W | WT-109-1 | K20-WAT | D10-WAT | 49-831 | 49-812 |
| P 61 | W | SDC-80-1 | K10-SDC | D10-SDC | 49-834 | 49-810 |
| P 62 | W | SDC-53-1 | K10-SDC | D10-SDC | 49-834 | 49-810 |
| P 62 | W | SDC-80-1 | K10-SDC | D10-SDC | 49-834 | 49-810 |
| P 62 | W | WJ-20-1 | K10-WJ | D10-WJ | 49-873 | 49-843 |
| P 62 | W | WJ-9-1 | K10-WJ | D10-WJ | 49-873 | 49-843 |
| P 62 T | W | WJ-13-1 | K10-WJ | D10-WJ | 49-873 | 49-843 |
| P 62 T | W | WJ-21-1 | K10-WJ | D10-WJ | 49-873 | 49-843 |
| P 65 | W | WJ-1-1 | K10-WJ | D10-WJ | 49-873 | 49-843 |
| P 650 | W | WJ-7-1 | K10-WJ | D10-WJ | 49-873 | 49-843 |
| P 70 | W | WS-18-1 | K10-WS | D10-WS | | 49-814 |
| P 7000 | W | WJ-1-1 | K10-WJ | D10-WJ | 49-873 | 49-843 |
| P 7000 | W | WJ-7-1 | K10-WJ | D10-WJ | 49-873 | 49-843 |
| P 7000 | W | WS-18-1 | K10-WS | D10-WS | | 49-814 |
| P 7700 | W | WJ-28-1 | K10-WJ | D10-WJ | 49-873 | 49-843 |
| R 39 | W | WT-17-1 | K20-WAT | D10-WAT | 49-831 | 49-812 |
| R 40 | W | WT-17-1 | K20-WAT | D10-WAT | 49-831 | 49-812 |
| RS 51 | W | HDA-86-1 | K20-HDA | D10-HDA | 49-845 | |
| **Efco/Emak /Olympk** | | | | | | |
| 49 | W | WJ-8-1 | K10-WJ | D10-WJ | 49-873 | 49-843 |
| 53 | W | WJ-8-1 | K10-WJ | D10-WJ | 49-873 | 49-843 |
| 59 | W | WJ-8-1 | K10-WJ | D10-WJ | 49-873 | 49-843 |
| 61 | W | WJ-8-1 | K10-WJ | D10-WJ | 49-873 | 49-843 |
| 66 | W | WJ-8-1 | K10-WJ | D10-WJ | 49-873 | 49-843 |
| 234 | T | HU-36B | RK-14HU | DG-3HU | 49-805 | 49-804 |
| 234 | W | WA-73-1 | K10-WAT | D10-WAT | 49-816 | 49-812 |
| 240 | W | WA-73-1 | K10-WAT | D10-WAT | 49-816 | 49-812 |
| 251 | T | HS-128B | RK-23HS | DG-5HS | 49-803 | 49-802 |
| 261 | T | HS-128B | RK-23HS | DG-5HS | 49-803 | 49-802 |
| 284 | W | WJ-30-1 | K11-WJ | D11-WJ | | |
| 284 | W | WJ-55-1 | K11-WJ | D11-WJ | | |
| 335 | T | HU-66A | RK-14HU | DG-3HU | 49-805 | 49-804 |
| 340 | T | HU-36B | RK-14HU | DG-3HU | 49-805 | 49-804 |
| 340 | W | WA-203-1 | K10-WAT | D10-WAT | 49-816 | 49-812 |
| 481 | W | WJ-30-1 | K11-WJ | D11-WJ | | |
| 481 | W | WJ-55-1 | K11-WJ | D11-WJ | | |
| 482 | W | WJ-30-1 | K11-WJ | D11-WJ | | |
| 482 | W | WJ-55-1 | K11-WJ | D11-WJ | | |
| 542 | T | HU-70A | RK-14HU | DG-3HU | 49-805 | 49-804 |
| 727 | W | WT-442-1 | K20-WAT | D20-WAT | 49-831 | 49-844 |
| 727 | W | WT-175-1 | K10-WAT | D10-WAT | 49-816 | 49-812 |
| 733 | W | WT-175-1 | K10-WAT | D10-WAT | 49-816 | 49-812 |

CARB = Original OEM Carburetor

**B** = Bing
**N** = Nikki
**T** = Tillotson
**TK** = Teiki
**W** = Walbro
**Z** = Zama

*** No model information available

| OEM ENGINE/UNIT | | WALBRO CARBURETOR | | | OREGON | |
|---|---|---|---|---|---|---|
| Model | Carb | № | Kit | Gaskets | Kit | Gaskets |
| **Efco/Emak /Olympk** | | | | | | |
| 733 | W | WT-442-1 | K20-WAT | D20-WAT | 49-831 | 49-844 |
| 740 | W | WT-442-1 | K20-WAT | D20-WAT | 49-831 | 49-844 |
| 740 | W | WT-241-1 | K20-WAT | D20-WAT | 49-831 | 49-844 |
| 931 | W | WT-477-1 | K10-WAT | D10-WAT | 49-816 | 49-812 |
| 931 | W | WT-607-1 | K20-WAT | D20-WAT | 49-831 | 49-844 |
| 935 | W | WT-495-1 | K10-WAT | D10-WAT | 49-816 | 49-812 |
| 935 | W | WT-302-1 | K10-WAT | D10-WAT | 49-816 | 49-812 |
| 936 | W | WT-562-1 | K20-WAT | D20-WAT | 49-831 | 49-844 |
| 936 | W | WT-536-1 | K20-WAT | D10-WAT | 49-831 | 49-812 |
| 940 | T | HU-65A | RK-14HU | DG-3HU | 49-805 | 49-804 |
| 940 | W | WT-535-1 | K20-WAT | D20-WAT | 49-831 | 49-844 |
| 940 | W | WT-561-1 | K20-WAT | D20-WAT | 49-831 | 49-844 |
| 941 | W | WT-494-1 | K20-WAT | D10-WAT | 49-831 | 49-812 |
| 942 | W | WT-162-1 | K20-WAT | D10-WAT | 49-831 | 49-812 |
| 944 | W | HDA-205-1 | K22-HDA | D22-HDA | 49-853 | 49-852 |
| 945 | W | HDA-30-1 | K20-HDA | D10-HDA | 49-845 | |
| 946 | W | WT-162-1 | K20-WAT | D10-WAT | 49-831 | 49-812 |
| 947 | Z | C3-E8 | RB-95 | GND-54 | | 49-874 |
| 949 | W | WT-162-1 | K20-WAT | D10-WAT | 49-831 | 49-812 |
| 950 | W | HDA-30-1 | K20-HDA | D10-HDA | 49-845 | |
| 951 | W | WT-162-1 | K20-WAT | D10-WAT | 49-831 | 49-812 |
| 951 | W | WT-494-1 | K20-WAT | D10-WAT | 49-831 | 49-812 |
| 952 | Z | C3-E8 | RB-95 | GND-54 | | 49-874 |
| 952 | W | HDA-205-1 | K22-HDA | D22-HDA | 49-853 | 49-852 |
| 956 | W | HDA-146-1 | K20-HDA | D10-HDA | 49-845 | |
| 956 | W | HDA-160-1 | K22-HDA | D22-HDA | 49-853 | 49-852 |
| 956 | W | HDA-192-1 | K22-HDA | D22-HDA | 49-853 | 49-852 |
| 962 | W | HDA-146-1 | K20-HDA | D10-HDA | 49-845 | |
| 962 | W | HDA-160-1 | K22-HDA | D22-HDA | 49-853 | 49-852 |
| 970 | W | WJ-72-1 | K12-WJ | D11-WJ | | |
| 970 | W | WJ-44-1 | K12-WJ | D10-WJ | | 49-843 |
| 980 | W | WJ-73-1 | K12-WJ | D11-WJ | | |
| 980 | W | WJ-63-1 | K12-WJ | D11-WJ | | |
| 981 | W | WJ-89-1 | K13-WJ | D13-WJ | | |
| 8000 | W | WT-442-1 | K20-WAT | D20-WAT | 49-831 | 49-844 |
| 8260 | W | WYJ-157A | K20-WYJ | D20-WYJ | 49-882 | |
| 8350 | W | WT-460-1 | K20-WAT | D20-WAT | 49-831 | 49-844 |
| 8350 | W | WT-442-1 | K20-WAT | D20-WAT | 49-831 | 49-844 |
| 8400 | W | WT-460-1 | K20-WAT | D20-WAT | 49-831 | 49-844 |
| 8400 | W | WT-442-1 | K20-WAT | D20-WAT | 49-831 | 49-844 |
| 8460 | W | WYK-143-1 | K21-WYK | D21-WYK | | |
| 8460 | W | WYK-144-1 | K21-WYK | D21-WYK | | |
| 8460 | W | WYK-103-1 | K21-WYK | D21-WYK | | |
| 8460 | W | WYK-104-1 | K21-WYK | D21-WYK | | |
| 8460 | W | WYK-125-1 | K13-WYK | D21-WYK | | |
| 8530 | W | WYK-125-1 | K13-WYK | D21-WYK | | |
| 8530 | W | WYK-104-1 | K21-WYK | D21-WYK | | |
| 8530 | W | WYK-103-1 | K21-WYK | D21-WYK | | |
| 8530 | W | WYK-144-1 | K21-WYK | D21-WYK | | |
| 8530 | W | WYK-143-1 | K21-WYK | D21-WYK | | |
| 8530 | W | WYK-146-1 | K13-WYK | D13-WYK | | |
| 8725 | W | WYJ-227-1 | K20-WYJ | D20-WYJ | 49-882 | |
| 8725 | W | WYJ-282-1 | K20-WYJ | D20-WYJ | 49-882 | |
| 16 R | W | WA-94-1 | K10-WAT | D10-WAT | 49-816 | 49-812 |
| 248T | T | HS-227A | RK-23HS | DG-5HS | 49-803 | 49-802 |
| 26 cc | W | WYJ-205-1 | K20-WYJ | D20-WYJ | 49-882 | |
| 26 cc | W | WYJ-255-1 | K20-WYJ | D20-WYJ | 49-882 | |
| 264 TTA | W | WJ-25-1 | K10-WJ | D10-WJ | 49-873 | 49-843 |
| 264 TTA | W | WJ-58-1 | K11-WJ | D11-WJ | | |
| 264 TTA | W | WJ-61-1 | K11-WJ | D11-WJ | | |
| 265 TTA | W | WJ-58-1 | K11-WJ | D11-WJ | | |
| 274 TTA | W | WJ-31-1 | K11-WJ | D11-WJ | | |
| 284 TTA | W | WJ-31-1 | K11-WJ | D11-WJ | | |
| 284 TTA | W | WJ-59-1 | K11-WJ | D11-WJ | | |
| 50cc | W | WYK-193-1 | K22-WYK | D22-WYK | | |
| 56 cc | W | HDA-168-1 | K22-HDA | D22-HDA | 49-853 | 49-852 |
| 56 cc | W | HDA-169-1 | K22-HDA | D22-HDA | 49-853 | 49-852 |
| 930 F | W | WT-66-1 | K10-WAT | D10-WAT | 49-816 | 49-812 |
| 935 DF | W | WT-66-1 | K10-WAT | D10-WAT | 49-816 | 49-812 |
| 935 F/DF | Z | C1Q-E5 | RB-55 | GND-39 | | |
| 940 F | W | WT-96-1 | K10-WAT | D10-WAT | 49-816 | 49-812 |
| 940 F | W | WT-97-1 | K10-WAT | D10-WAT | 49-816 | 49-812 |
| 947 EPA | Z | C3-E9 | RB-95 | GND-54 | | 49-874 |
| 952 EPA | Z | C3-E9 | RB-95 | GND-54 | | 49-874 |
| 961 TTA | W | HDA-193-1 | K22-HDA | D22-HDA | 49-853 | 49-852 |
| 962TTA | W | HDA-207-1 | K12-HDA | D11-HDA | | |
| 980 TTA | W | WJ-83-1 | K15-WJ | D11-WJ | | |
| 980 TTA | W | WJ-85-1 | K12-WJ | D10-WJ | | 49-843 |
| 980TTA | W | WJ-104-1 | K14-WJ | D12-WJ | | |
| 999 F | W | WGA-4-1 | K21-WGA | D10-WGA | | |

C

# Carburetor Kit Application Chart

| OEM ENGINE/UNIT | | WALBRO CARBURETOR | | | OREGON | |
|---|---|---|---|---|---|---|
| Model | Carb | № | Kit | Gaskets | Kit | Gaskets |
| **Efco/Emak /Olympk** | | | | | | |
| 999 F | W | WGA-5-1 | K21-WGA | D10-WGA | | |
| 999 F | W | WGA-1-1 | K21-WGA | D10-WGA | | |
| 999 F | W | WGA-2-1 | K21-WGA | D10-WGA | | |
| 999 F | W | WGA-6-1 | K21-WGA | D10-WGA | | |
| 999 F | W | WGA-9-1 | K21-WGA | D10-WGA | | |
| 999 ICS | W | WGA-9-1 | K21-WGA | D10-WGA | | |
| 999 ICS | W | WGA-7-1 | K21-WGA | D10-WGA | | |
| 999 TTA | W | WGA-8-1 | K21-WGA | D10-WGA | | |
| 999 TTA | W | WGA-10-1 | K21-WGA | D10-WGA | | |
| 999 TTG | W | WGA-3-1 | K21-WGA | D10-WGA | | |
| AQU-SCOOTER | W | HDA-115-1 | K20-HDA | D10-HDA | 49-845 | |
| AQU-SCOOTER | W | HDA-83-1 | K20-HDA | D10-HDA | 49-845 | |
| BV162 | W | WYK-176-1 | K21-WYK | D21-WYK | | |
| EFCO 8742 | Z | C1Q-E6 | RB-47 | GND-18 | | |
| EFCO8300 | Z | C1Q-E10 | RB-76 | GND-41 | | |
| EFCO8300/8400 | Z | C1Q-E7 | RB-76 | GND-41 | | |
| EFCO8350 | Z | C1Q-E10 | RB-76 | GND-41 | | |
| EFCO8400 | Z | C1Q-E7 | RB-76 | GND-41 | | |
| EFCO8400 | Z | C1Q-E10 | RB-76 | GND-41 | | |
| GDO 26cc | W | WYL-159-1 | K20-WYL | D11-WYL | | |
| ICS 633 GC | W | WGA-11-1 | K21-WGA | D10-WGA | | |
| JET 200 | W | WZ-19-1 | K10-WZ | D10-WZ | 49-877 | 49-848 |
| JET 200 | W | WYK-26-1 | K21-WYK | D21-WYK | | |
| JET 220 | W | WT-151-1 | K20-WAT | D20-WAT | 49-831 | 49-844 |
| JET 220 | W | WYK-26-1 | K21-WYK | D21-WYK | | |
| JET 220 | W | WZ-19-1 | K10-WZ | D10-WZ | 49-877 | 49-848 |
| JET 220 | W | WT-82-1 | K10-WAT | D10-WAT | 49-816 | 49-812 |
| JET 260 | W | WT-151-1 | K20-WAT | D20-WAT | 49-831 | 49-844 |
| JET 260 | W | WYK-26-1 | K21-WYK | D21-WYK | | |
| JET 260 | W | WZ-19-1 | K10-WZ | D10-WZ | 49-877 | 49-848 |
| JET 260 | W | WYJ-167-1 | K20-WYJ | D20-WYJ | 49-882 | |
| JET 260 | W | WT-82-1 | K10-WAT | D10-WAT | 49-816 | 49-812 |
| JET 261 | W | WZ-19-1 | K10-WZ | D10-WZ | 49-877 | 49-848 |
| JET 300 | Z | C1S-E2 | RB-2 | GND-2 | | 49-881 |
| JET 300 | Z | C1Q-E3 | RB-47 | GND-18 | | |
| JET 300 | Z | C1Q-E4 | RB-47 | GND-18 | | |
| JET 300 | W | WT-137-1 | K10-WAT | D10-WAT | 49-816 | 49-812 |
| JET 300 | W | WT-178-1 | K10-WAT | D10-WAT | 49-816 | 49-812 |
| JET 300 | W | WT-196-1 | K20-WAT | D20-WAT | 49-831 | 49-844 |
| JET 300 | W | WT-259-1 | K10-WAT | D10-WAT | 49-816 | 49-812 |
| JET 300 | W | WT-93-1 | K10-WAT | D10-WAT | 49-816 | 49-812 |
| JET 300 | W | WZ-15-1 | K10-WZ | D10-WZ | 49-877 | 49-848 |
| JET 300 | W | WZ-7-1 | K10-WZ | D10-WZ | 49-877 | 49-848 |
| JET 350 | W | WZ-15-1 | K10-WZ | D10-WZ | 49-877 | 49-848 |
| JET 350 | W | WZ-7-1 | K10-WZ | D10-WZ | 49-877 | 49-848 |
| JET 400 | Z | C1S-E2 | RB-2 | GND-2 | | 49-881 |
| JET 400 | Z | C1Q-E3 | RB-47 | GND-18 | | |
| JET 400 | Z | C1Q-E4 | RB-47 | GND-18 | | |
| JET 400 | W | WT-137-1 | K10-WAT | D10-WAT | 49-816 | 49-812 |
| JET 400 | W | WT-178-1 | K10-WAT | D10-WAT | 49-816 | 49-812 |
| JET 400 | W | WT-196-1 | K20-WAT | D20-WAT | 49-831 | 49-844 |
| JET 400 | W | WT-259-1 | K10-WAT | D10-WAT | 49-816 | 49-812 |
| JET 400 | W | WT-93-1 | K10-WAT | D10-WAT | 49-816 | 49-812 |
| JET 400 | W | WZ-15-1 | K10-WZ | D10-WZ | 49-877 | 49-848 |
| JET 400 | W | WZ-7-1 | K10-WZ | D10-WZ | 49-877 | 49-848 |
| JET 460 | W | WT-94-1 | K10-WAT | D10-WAT | 49-816 | 49-812 |
| JET 8260 | W | WYJ-167-1 | K20-WYJ | D20-WYJ | 49-882 | |
| JET460AVS | Z | C1S-E1 | RB-2 | GND-2 | | 49-881 |
| King 400 | W | WT-178-1 | K10-WAT | D10-WAT | 49-816 | 49-812 |
| King 400 | W | WZ-15-1 | K10-WZ | D10-WZ | 49-877 | 49-848 |
| King 401 | W | WZ-15-1 | K10-WZ | D10-WZ | 49-877 | 49-848 |
| Super 100 | W | WGA-10-1 | K21-WGA | D10-WGA | | |
| Super 60 | W | WJ-58-1 | K11-WJ | D11-WJ | | |
| T 50 | W | WA-94-1 | K10-WAT | D10-WAT | 49-816 | 49-812 |
| Target Super 60 | W | WJ-75-1 | K12-WJ | D11-WJ | | |
| Target Super 80 | W | WJ-74-1 | K12-WJ | D11-WJ | | |
| TS 326 | W | WYJ-228-1 | K20-WYJ | D20-WYJ | 49-882 | |
| TS 327 | W | WYJ-263-1 | K20-WYJ | D20-WYJ | 49-882 | |
| TS 327 | W | WYJ-264-1 | K20-WYJ | D20-WYJ | 49-882 | |
| **Efco/Emak /Olympk** | | | | | | |
| Unspecified | W | WYA-58-1 | K20-WYA | D20-WYA | | |
| Unspecified | W | WT-726-1 | K10-WAT | D10-WAT | 49-816 | 49-812 |
| unspecified | W | WT-705-1 | K26-WAT | D26-WAT | | |
| **Farmech Brush Cutter** | | | | | | |
| SDE260D-11 | W | WYJ-426-1 | K20-WYJ | D10-WYJ | 49-882 | |
| SE 230 D | W | WYL-155-1 | K20-WYL | D11-WYL | | |

| OEM ENGINE/UNIT | | WALBRO CARBURETOR | | | OREGON | |
|---|---|---|---|---|---|---|
| Model | Carb | № | Kit | Gaskets | Kit | Gaskets |
| **FHI Rammer** | | | | | | |
| EC 12 | W | WJ-87-1 | K14-WJ | D12-WJ | | |
| EC 12 | W | WJ-81-1 | K14-WJ | D12-WJ | | |
| EC 12 | W | HDA-173-1 | K22-HDA | D22-HDA | 49-853 | 49-852 |
| EC 12 | W | WJ-84-1 | K14-WJ | D12-WJ | | |
| EC 12 | W | HDA-172-1 | K22-HDA | D22-HDA | 49-853 | 49-852 |
| EH 12 | W | HDA-171-1 | K24-HDA | D24-HDA | | |
| **Fichtel Lawnmower** | | | | | | |
| | W | LMJ-6-1 | K10-LMJ | | | |
| | W | LMJ-5-1 | K10-LMJ | | | |
| Fox Motori | W | | | | | |
| 25 cc ENGINE | W | WT-337-1 | K10-WAT | D10-WAT | 49-816 | 49-812 |
| 44 cc ENGINE | W | WT-158-1 | K10-WAT | D10-WAT | 49-816 | 49-812 |
| 44 cc ENGINE | W | WT-159-1 | K10-WAT | D10-WAT | 49-816 | 49-812 |
| **Fradan** | | | | | | |
| 30cc STRNO trimmer | Z | C1U-FD1 | RB-48 | GND-18 | | |
| FUJI | Z | | | | | |
| EC-10 | Z | C3M-FJ1 | RB-35 | GND-24 | | |
| EC-12 | Z | C3M-FJ2 | RB-35 | GND-24 | | |
| EC-12 | Z | C3M-FJ3 | RB-35 | GND-24 | | |
| EC-12 | Z | C3M-FJ4 | RB-35 | GND-24 | | |
| EC-12 | Z | C3M-FJ5 | RB-35 | GND-24 | | |
| ECO 25 GA-2 | Z | RB-FR2 | RB-102 | GND-52 | | |
| ECO 22 GA-2 | Z | RB-FR3 | RB-103 | GND-52 | | |
| ECO 25 GA-2 | Z | RB-FR4 | RB-102 | GND-52 | | |
| MFL500X | Z | C1M-FR1 | RB-70 | GND-43 | | |
| **Hitachi** | | | | | | |
| CG 23 | W | WZ-28-1 | K10-WZ | D10-WZ | 49-877 | 49-848 |
| CG 26 | W | WZ-28-1 | K10-WZ | D10-WZ | 49-877 | 49-848 |
| CG 26 E | W | WZ-3-1 | K10-WZ | D10-WZ | 49-877 | 49-848 |
| CG 26 EA | W | WZ-3-1 | K10-WZ | D10-WZ | 49-877 | 49-848 |
| CG 33 | W | WY-13-1 | K10-WY | D10-WY | 49-875 | 49-839 |
| CG 33 EC | W | WYJ-46-1 | K20-WYJ | D20-WYJ | 49-882 | |
| **HMC (Green Machine)** | | | | | | |
| 1600 | W | WT-25-1 | K10-WAT | D10-WAT | 49-816 | 49-812 |
| 1700 | W | WA-102-1 | K10-WAT | D10-WAT | 49-816 | 49-812 |
| 2300 | W | WA-105-1 | K10-WAT | D10-WAT | 49-816 | 49-812 |
| 2499 | W | WY-1-1 | K10-WY | D10-WY | 49-875 | 49-839 |
| 2800 | W | WY-50-1 | K10-WY | D10-WY | 49-875 | 49-839 |
| 7200 | W | WA-112-1 | K10-WAT | D10-WAT | 49-816 | 49-812 |
| 7400 | W | WA-113-1 | K10-WAT | D10-WAT | 49-816 | 49-812 |
| 7600 | W | HDA-27-1 | K20-HDA | D10-HDA | 49-845 | |
| 2500 LP | W | WY-1-1 | K10-WY | D10-WY | 49-875 | 49-839 |
| 25101 LP | W | WY-1-1 | K10-WY | D10-WY | 49-875 | 49-839 |
| 3000 LP | W | WY-4-1 | K10-WY | D10-WY | 49-875 | 49-839 |
| 4600 LP | W | HDA-26-1 | K12-HDA | D11-HDA | | |
| LJP-260 | Z | C1U-M16 | RB-28 | GND-18 | 49-866 | |
| **Hoffco** | | | | | | |
| JP-260 | Z | C1U-M16 | RB-28 | GND-18 | 49-866 | |
| **Homelite/John Deere** | | | | | | |
| 150 | W | HDC-20-1 | K10-HDC | D10-HDC | 49-833 | 49-807 |
| 200 | Z | C1Q-H17 | RB-54 | GND-27 | | 49-909 |
| 200 | Z | C1Q-H17 | RB-54 | GND-27 | | 49-909 |
| 200 | Z | C1Q-H17 | RB-54 | GND-27 | | 49-909 |
| 200 | Z | C1Q-H17 | RB-54 | GND-27 | | 49-909 |
| 220 | W | WT-1-1 | K10-WAT | D10-WAT | 49-816 | 49-812 |
| 240 | Z | C1S-H4 | RB-5 | GND-2 | | 49-881 |
| 240 | W | WT-2-1 | K10-WAT | D10-WAT | 49-816 | 49-812 |

CARB = Original OEM Carburetor

**B** = Bing
**N** = Nikki
**T** = Tillotson
**TK** = Teiki
**W** = Walbro
**Z** = Zama

*** No model information available

C

# Carburetor Kit Application Chart

| OEM ENGINE/UNIT | | WALBRO CARBURETOR | | | OREGON | |
|---|---|---|---|---|---|---|
| Model | Carb | № | Kit | Gaskets | Kit | Gaskets |
| **Homelite/John Deere** | | | | | | |
| 240 | W | WT-361-1 | K20-WAT | D10-WAT | 49-831 | 49-812 |
| 240 | W | WT-6-1 | K20-WAT | D10-WAT | 49-831 | 49-812 |
| 240 | W | WT-467-1 | K20-WAT | D10-WAT | 49-831 | 49-812 |
| 245 | Z | C1S-H8 | RB-5 | GND-2 | | 49-881 |
| 245 | W | WT-19-1 | K20-WAT | D10-WAT | 49-831 | 49-812 |
| 250 | Z | C1Q-H14 | RB-39 | GND-27 | 49-902 | 49-909 |
| 250 | Z | C1Q-H27 | RB-39 | GND-27 | 49-902 | 49-909 |
| 250 | W | WT-156-1 | K20-WAT | D10-WAT | 49-831 | 49-812 |
| 250 | W | WT-185-1 | K20-WAT | D10-WAT | 49-831 | 49-812 |
| 250 | W | WT-224-1 | K20-WAT | D10-WAT | 49-831 | 49-812 |
| 250 | W | WT-316-1 | K20-WAT | D10-WAT | 49-831 | 49-812 |
| 250 | W | WT-372-1 | K10-WAT | D10-WAT | 49-816 | 49-812 |
| 250 | W | WT-282-1 | K20-WAT | D10-WAT | 49-831 | 49-812 |
| 290 | W | WT-42-1 | K20-WAT | D10-WAT | 49-831 | 49-812 |
| 290 | W | WT-72-1 | K20-WAT | D10-WAT | 49-831 | 49-812 |
| 300 | W | HDA-109-1 | K20-HDA | D10-HDA | 49-845 | |
| 300 | W | HDA-99-1 | K20-HDA | D10-HDA | 49-845 | |
| 300 | W | WT-282-1 | K20-WAT | D10-WAT | 49-831 | 49-812 |
| 300 | W | WT-373-1 | K10-WAT | D10-WAT | 49-816 | 49-812 |
| 320 | W | HDA-59-1 | K20-HDA | D10-HDA | 49-845 | |
| 330 | W | WT-1-1 | K10-WAT | D10-WAT | 49-816 | 49-812 |
| 330 | W | WT-4-1 | K10-WAT | D10-WAT | 49-816 | 49-812 |
| 340 | W | WT-72-1 | K20-WAT | D10-WAT | 49-831 | 49-812 |
| 340 | W | WT-42-1 | K20-WAT | D10-WAT | 49-831 | 49-812 |
| 350 | W | HDA-75-1 | K20-HDA | D10-HDA | 49-845 | |
| 350 | W | HDC-16-1 | K10-HDC | D10-HDC | 49-833 | 49-807 |
| 350 | W | HDC-21-1 | K10-HDC | D10-HDC | 49-833 | 49-807 |
| 350 | W | HDC-23-1 | K10-HDC | D10-HDC | 49-833 | 49-807 |
| 350 | W | HDC-33-1 | K10-HDC | D10-HDC | 49-833 | 49-807 |
| 350 | W | HDC-39-1 | K10-HDC | D10-HDC | 49-833 | 49-807 |
| 350 | W | HDC-47-1 | K10-HDC | D10-HDC | 49-833 | 49-807 |
| 350 | W | HDC-77-1 | K10-HDC | D10-HDC | 49-833 | 49-807 |
| 350 | W | HDC-81-1 | K10-HDC | D10-HDC | 49-833 | 49-807 |
| 350 | W | HDC-46-1 | K10-HDC | D10-HDC | 49-833 | 49-807 |
| 360 | W | HDA-75-1 | K20-HDA | D10-HDA | 49-845 | |
| 360 | W | HDC-39-1 | K10-HDC | D10-HDC | 49-833 | 49-807 |
| 360 | W | HDC-46-1 | K10-HDC | D10-HDC | 49-833 | 49-807 |
| 360 | W | HDC-47-1 | K10-HDC | D10-HDC | 49-833 | 49-807 |
| 360 | W | HDC-77-1 | K10-HDC | D10-HDC | 49-833 | 49-807 |
| 360 | W | HDC-81-1 | K10-HDC | D10-HDC | 49-833 | 49-807 |
| 410 | W | WS-21-1 | K10-WS | D10-WS | | 49-814 |
| 410 | W | WJ-5-1 | K11-WJ | D11-WJ | | |
| 410 | W | WS-22-1 | K10-WS | D10-WS | | 49-814 |
| 420 | W | HDA-59-1 | K20-HDA | D10-HDA | 49-845 | |
| 450 | W | SDC-54-1 | K10-SDC | D10-SDC | 49-834 | 49-810 |
| 450 | W | SDC-62-1 | K10-SDC | D10-SDC | 49-834 | 49-810 |
| 540 | W | WJ-2-1 | K10-WJ | D10-WJ | 49-873 | 49-843 |
| 550 | W | SDC-69-1 | K10-SDC | D10-SDC | 49-834 | 49-810 |
| 650 | W | WB-2-1 | K10-WB | D10-WB | 49-872 | 49-869 |
| 750 | W | WB-4-1 | K10-WB | D10-WB | 49-872 | 49-869 |
| 8800 | W | WJ-2-1 | K10-WJ | D10-WJ | 49-873 | 49-843 |
| 8800 | W | WJ-60-1 | K10-WJ | D10-WJ | 49-873 | 49-843 |
| 1050 A | W | SDC-60-1 | K10-SDC | D10-SDC | 49-834 | 49-810 |
| 1050 A | W | SDC-74-1 | K10-SDC | D10-SDC | 49-834 | 49-810 |
| 1130 GA | W | SDC-60-1 | K10-SDC | D10-SDC | 49-834 | 49-810 |
| 1130 GA | W | SDC-74-1 | K10-SDC | D10-SDC | 49-834 | 49-810 |
| 150 Auto | W | HDC-45-1 | K10-HDC | D10-HDC | 49-833 | 49-807 |
| 150 Auto | W | HDC-54-1 | K10-HDC | D10-HDC | 49-833 | 49-807 |
| 25 cc | W | MA-1-1 | | | | |
| 25 cc | W | WT-318-1 | K10-WAT | D10-WAT | 49-816 | 49-812 |
| 30 cc | W | WTA-19-1 | | | | |
| 30 cc | W | WTA-21-1 | | | | |
| 30 cc | W | WT-277-1 | K10-WAT | D10-WAT | 49-816 | 49-812 |
| 30 cc | W | WT-370-1 | K10-WAT | D10-WAT | 49-816 | 49-812 |
| 30 cc | W | WT-470-1 | K10-WAT | D10-WAT | 49-816 | 49-812 |
| 30 cc | W | MA-1-1 | | | | |
| 33 - 38CC chainsaw | Z | C1Q-H35 | RB-54 | GND-27 | | 49-909 |
| 33 cc | W | WT-570-1 | K26-WAT | D26-WAT | | |
| 33 cc | W | WT-433-1 | K10-WAT | D10-WAT | 49-816 | 49-812 |
| 33 cc | W | WT-433-1 | K10-WAT | D10-WAT | 49-816 | 49-812 |
| 330 (ARTIC) | Z | C1S-H7 | RB-3 | GND-2 | | 49-881 |

CARB = Original OEM Carburetor

**B** = Bing
**N** = Nikki
**T** = Tillotson
**TK** = Teiki
**W** = Walbro
**Z** = Zama

*** No model information available

| OEM ENGINE/UNIT | | WALBRO CARBURETOR | | | OREGON | |
|---|---|---|---|---|---|---|
| Model | Carb | № | Kit | Gaskets | Kit | Gaskets |
| **Homelite/John Deere** | | | | | | |
| 330 (NON-ARTIC) | Z | C1S-H3 | RB-3 | GND-2 | | 49-881 |
| 33-38CC SAW NON EM | Z | C1Q-H43 | RB-54 | GND-27 | | 49-909 |
| 33-38CC SAW | Z | C1Q-H42 | RB-54 | GND-27 | | 49-909 |
| 33cc | W | WT-772-1 | K10-WAT | D10-WAT | 49-816 | 49-812 |
| 33cc | W | WT-707-1 | K20-WAT | D10-WAT | 49-831 | 49-812 |
| 33cc | W | WT-673-1 | K26-WAT | D26-WAT | | |
| 35 cc | W | HDC-78-1 | K10-HDC | D10-HDC | 49-833 | 49-807 |
| 350 P | W | HDC-47-1 | K10-HDC | D10-HDC | 49-833 | 49-807 |
| 350 P | W | HDC-26-1 | K10-HDC | D10-HDC | 49-833 | 49-807 |
| 360 HG | W | HDC-39-1 | K10-HDC | D10-HDC | 49-833 | 49-807 |
| 360 HG | W | HDC-47-1 | K10-HDC | D10-HDC | 49-833 | 49-807 |
| 360 HG | W | HDC-77-1 | K10-HDC | D10-HDC | 49-833 | 49-807 |
| 38 cc | W | WT-433-1 | K10-WAT | D10-WAT | 49-816 | 49-812 |
| 38 cc | W | WT-433-1 | K10-WAT | D10-WAT | 49-816 | 49-812 |
| 38 cc | W | WT-570-1 | K26-WAT | D26-WAT | | |
| 38CC SAW | Z | C1M-H57 | RB-57 | GND-43 | | |
| 40 cc | W | WT-192-1 | K20-WAT | D10-WAT | 49-831 | 49-812 |
| 40cc chain Saw | Z | C1Q-H64 | RB-146 | GND-82 | | |
| 45CC C NON-EM | Z | C1Q-H45 | RB-54 | GND-27 | | 49-909 |
| 45CC chain SAW | Z | C1Q-H44 | RB-54 | GND-27 | | 49-909 |
| 45CC SAW | Z | C1M-H58 | RB-57 | GND-43 | | |
| AP 125 | W | WT-502-1 | K20-WAT | D10-WAT | 49-831 | 49-812 |
| AP 125 | W | WT-244-1 | K10-WAT | D10-WAT | 49-816 | 49-812 |
| BACK PAC BLOWER | Z | C1U-H37 | RB-20 | GND-12 | 49-864 | 49-851 |
| BP 250 | W | WT-199-1 | K10-WAT | D10-WAT | 49-816 | 49-812 |
| BP 250 | W | WT-371-1 | K10-WAT | D10-WAT | 49-816 | 49-812 |
| BP 250 | W | WT-419-1 | K10-WAT | D10-WAT | 49-816 | 49-812 |
| BP 250 | W | WT-150-1 | K20-WAT | D10-WAT | 49-831 | 49-812 |
| BP-250 | Z | C1U-H13 | RB-20 | GND-12 | 49-864 | 49-851 |
| BX 90 | W | WT-471-1 | K10-WAT | D10-WAT | 49-816 | 49-812 |
| BX 90 | W | WT-431-1 | K10-WAT | D10-WAT | 49-816 | 49-812 |
| DM 38 | W | HDA-106-1 | K20-HDA | D10-HDA | 49-845 | |
| DM 50 | W | SDC-71-1 | K10-SDC | D10-SDC | 49-834 | 49-810 |
| E 200 | W | WT-236-1 | K10-WAT | D10-WAT | 49-816 | 49-812 |
| E 200 | W | WT-280-1 | K10-WAT | D10-WAT | 49-816 | 49-812 |
| ECO BACKPACK BLOWER | Z | LE-H56 | RB-94 | GND-12 | | 49-851 |
| ECO BLOWER | Z | LE-H55 | RB-94 | GND-12 | | 49-851 |
| ECO trimmer | Z | LE-H53 | RB-86 | GND-18 | | |
| ECO-SIMPLE START® | Z | LE-H54 | RB-86 | GND-49 | | |
| EZ | W | HDC-4-1 | K10-HDC | D10-HDC | 49-833 | 49-807 |
| EZ | W | HDC-44-1 | K10-HDC | D10-HDC | 49-833 | 49-807 |
| EZ | W | HDC-64-1 | K10-HDC | D10-HDC | 49-833 | 49-807 |
| EZ 250 | W | HDC-1-1 | K10-HDC | D10-HDC | 49-833 | 49-807 |
| EZ 250 Auto | W | HDC-4-1 | K10-HDC | D10-HDC | 49-833 | 49-807 |
| EZ Auto | W | HDC-1-1 | K10-HDC | D10-HDC | 49-833 | 49-807 |
| EZ Auto | W | HDC-4-1 | K10-HDC | D10-HDC | 49-833 | 49-807 |
| EZ Auto | W | HDC-44-1 | K10-HDC | D10-HDC | 49-833 | 49-807 |
| EZ Auto | W | HDC-64-1 | K10-HDC | D10-HDC | 49-833 | 49-807 |
| EZ Mini | W | HDC-2-1 | K10-HDC | D10-HDC | 49-833 | 49-807 |
| EZ Mini Auto | W | HDC-4-1 | K10-HDC | D10-HDC | 49-833 | 49-807 |
| FP 100 | W | WB-12-1 | K10-WB | D10-WB | 49-872 | 49-869 |
| Hand Held | W | WT-369-1 | K10-WAT | D10-WAT | 49-816 | 49-812 |
| HB 380 | W | WT-69-1 | K20-WAT | D10-WAT | 49-831 | 49-812 |
| HB 480 | W | WT-69-1 | K20-WAT | D10-WAT | 49-831 | 49-812 |
| HB 680 | W | WT-69-1 | K20-WAT | D10-WAT | 49-831 | 49-812 |
| HB-180 | Z | C1U-H11 | RB-20 | GND-12 | 49-864 | 49-851 |
| HB-180 | Z | C1U-H11 | RB-20 | GND-12 | 49-864 | 49-851 |
| HBC 38 | W | WT-213-1 | K10-WAT | D10-WAT | 49-816 | 49-812 |
| HBC 38 | W | WT-226-1 | K10-WAT | D10-WAT | 49-816 | 49-812 |
| HBC 38 | W | WA-213-1 | K10-WAT | D10-WAT | 49-816 | 49-812 |
| HBC-40 | Z | C1Q-H19 | RB-39 | GND-27 | 49-902 | 49-909 |
| HBC-40 | Z | C1Q-H19 | RB-39 | GND-27 | 49-902 | 49-909 |
| HEDGE trimmer | Z | C1U-H40 | RB-29 | GND-12 | 49-285 | 49-851 |
| HT 17 | W | WT-423-1 | K10-WAT | D10-WAT | 49-816 | 49-812 |
| HT 17 | W | WT-117-1 | K20-WAT | D10-WAT | 49-831 | 49-812 |
| HT 17 | W | WT-206-1 | K10-WAT | D10-WAT | 49-816 | 49-812 |
| HT 17 | W | WT-173-1 | K20-WAT | D10-WAT | 49-831 | 49-812 |
| HT-17 | Z | C1U-H12A-B | RB-20 | GND-12 | 49-864 | 49-851 |
| HT-17 | Z | C1U-H12C-D | RB-29 | GND-12 | 49-285 | 49-851 |
| HTC 12 | W | WTA-26-1 | | | | |
| J 501 | W | SDC-68-1 | K10-SDC | D10-SDC | 49-834 | 49-810 |
| Jacobsen | W | HDA-59-1 | K20-HDA | D10-HDA | 49-845 | |
| LE 30CC trimmer | Z | C1U-H60 | RB-29 | GND-18 | 49-285 | |
| LX 30 | W | WTA-20-1 | | | | |
| LX 30 | W | WTA-23-1 | | | | |
| LX 30 | W | WTA-24-1 | | | | |
| LX 30 | W | WTA-25-1 | | | | |
| MP 38 | W | HDA-162-1 | K22-HDA | D22-HDA | 49-853 | 49-852 |
| MP 55 | W | WJ-24-1 | K10-WJ | D10-WJ | 49-873 | 49-843 |

C

# Carburetor Kit Application Chart

| OEM ENGINE/UNIT | | WALBRO CARBURETOR | | | OREGON | |
|---|---|---|---|---|---|---|
| Model | Carb | № | Kit | Gaskets | Kit | Gaskets |
| **Homelite/John Deere** | | | | | | |
| MP 88 | W | WJ-78-1 | K10-WJ | D10-WJ | 49-873 | 49-843 |
| MP 88 | W | WJ-90-1 | K10-WJ | D10-WJ | 49-873 | 49-843 |
| P 100-1 | W | HDC-68-1 | K10-HDC | D10-HDC | 49-833 | 49-807 |
| P 100-1 | W | HDC-72-1 | K10-HDC | D10-HDC | 49-833 | 49-807 |
| P 125 | W | WT-179-1 | K20-WAT | D10-WAT | 49-831 | 49-812 |
| PBC3600/B | Z | C1U-H28 | RB-28 | GND-18 | 49-866 | |
| PLT3400 | Z | C1U-H28 | RB-28 | GND-18 | 49-866 | |
| SIMPLE START® ST | Z | C1U-H46 | RB-82 | GND-49 | | |
| SIMPLE START® ST | Z | C1U-H49 | RB-82 | GND-49 | | |
| Snoburst | W | HDC-63-1 | K10-HDC | D10-HDC | 49-833 | 49-807 |
| Sprayer | W | WA-95-1 | K10-WAT | D10-WAT | 49-816 | 49-812 |
| ST 100 | W | WA-130-1 | K10-WAT | D10-WAT | 49-816 | 49-812 |
| ST 100 | W | WA-159-1 | K10-WAT | D10-WAT | 49-816 | 49-812 |
| ST 155 | W | WT-165-1 | K20-WAT | D10-WAT | 49-831 | 49-812 |
| ST 155 | W | WT-191-1 | K20-WAT | D10-WAT | 49-831 | 49-812 |
| ST 155 | W | WT-220-1 | K10-WAT | D10-WAT | 49-816 | 49-812 |
| ST 155 | W | WT-71-1 | K20-WAT | D10-WAT | 49-831 | 49-812 |
| ST 155 | W | WT-95-1 | | | | |
| ST 160 | W | HDC-70-1 | K10-HDC | D10-HDC | 49-833 | 49-807 |
| ST 160 | W | HDC-75-1 | K10-HDC | D10-HDC | 49-833 | 49-807 |
| ST 160 | W | HDC-80-1 | K10-HDC | D10-HDC | 49-833 | 49-807 |
| ST 160 | W | HDC-76-1 | K20-HDA | D10-HDA | 49-845 | |
| ST 180 | W | HDC-76-1 | K20-HDA | D10-HDA | 49-845 | |
| ST 180 | W | HDC-70-1 | K10-HDC | D10-HDC | 49-833 | 49-807 |
| ST 200 | W | HDC-59-1 | K10-HDC | D10-HDC | 49-833 | 49-807 |
| ST 200 | W | HDC-66-1 | K10-HDC | D10-HDC | 49-833 | 49-807 |
| ST 200 | W | HDC-69-1 | K10-HDC | D10-HDC | 49-833 | 49-807 |
| ST 80 | W | WA-83-1 | K10-WAT | D10-WAT | 49-816 | 49-812 |
| ST-100 | Z | C1S-H2 | RB-3 | GND-2 | | 49-881 |
| ST-120 | Z | C1S-H2 | RB-3 | GND-2 | | 49-881 |
| ST-155 | Z | C1U-H10 | RB-20 | GND-12 | 49-864 | 49-851 |
| ST-155 | Z | C1U-H10 | RB-20 | GND-12 | 49-864 | 49-851 |
| ST-155 | Z | C1U-H10 | RB-20 | GND-12 | 49-864 | 49-851 |
| ST-155 | Z | C1U-H18 | RB-29 | GND-12 | 49-285 | 49-851 |
| ST-160A | Z | C2S-H9 | RB-17 | GND-9 | | |
| ST-175 | Z | C1U-H10 | RB-20 | GND-12 | 49-864 | 49-851 |
| ST-175 | Z | C1U-H10 | RB-20 | GND-12 | 49-864 | 49-851 |
| ST-175 | Z | C1U-H10 | RB-20 | GND-12 | 49-864 | 49-851 |
| ST-175 | Z | C1U-H18 | RB-29 | GND-12 | 49-285 | 49-851 |
| ST-175 | Z | C1U-H18 | RB-29 | GND-12 | 49-285 | 49-851 |
| ST200 | W | HDC-73-1 | K10-HDC | D10-HDC | 49-833 | 49-807 |
| ST-285 | Z | C1U-H10 | RB-20 | GND-12 | 49-864 | 49-851 |
| ST-285 | Z | C1U-H10 | RB-20 | GND-12 | 49-864 | 49-851 |
| ST-285 | Z | C1U-H10 | RB-20 | GND-12 | 49-864 | 49-851 |
| ST-285 | Z | C1U-H18 | RB-29 | GND-12 | 49-285 | 49-851 |
| ST-285 | Z | C1U-H18 | RB-29 | GND-12 | 49-285 | 49-851 |
| ST-385 | Z | C1U-H10 | RB-20 | GND-12 | 49-864 | 49-851 |
| ST-385 | Z | C1U-H10 | RB-20 | GND-12 | 49-864 | 49-851 |
| ST-385 | Z | C1U-H10 | RB-20 | GND-12 | 49-864 | 49-851 |
| ST-385 | Z | C1U-H18 | RB-29 | GND-12 | 49-285 | 49-851 |
| ST-385 | Z | C1U-H18 | RB-29 | GND-12 | 49-285 | 49-851 |
| ST-80 | Z | C1S-H6 | RB-3 | GND-2 | | 49-881 |
| STRING TRIMMER | Z | C1U-H39 | RB-29 | GND-18 | 49-285 | |
| STRING TRIMMER | Z | C1U-H41 | RB-29 | GND-18 | 49-285 | |
| STRING TRIMMER | Z | C1U-H47 | RB-29 | GND-18 | 49-285 | |
| STRING TRIMMER | Z | C1U-H48 | RB-29 | GND-18 | 49-285 | |
| SUP-2 | Z | C2S-H5 | RB-19 | GND-9 | 49-821-0 | |
| SUP-2 | Z | C2S-H5 | RB-19 | GND-9 | 49-821-0 | |
| Super 1050 A | W | SDC-60-1 | K10-SDC | D10-SDC | 49-834 | 49-810 |
| Super 1050 A | W | SDC-74-1 | K10-SDC | D10-SDC | 49-834 | 49-810 |
| Super 1130 GA | W | SDC-60-1 | K10-SDC | D10-SDC | 49-834 | 49-810 |
| Super 1130 GA | W | SDC-74-1 | K10-SDC | D10-SDC | 49-834 | 49-810 |
| Super 2 | W | HDA-60-1 | K20-HDA | D10-HDA | 49-845 | |
| Super 2 | W | HDC-27-1 | K10-HDC | D10-HDC | 49-833 | 49-807 |
| Super 2 | W | HDC-40-1 | K10-HDC | D10-HDC | 49-833 | 49-807 |
| Super 2 | W | HDC-48-1 | K10-HDC | D10-HDC | 49-833 | 49-807 |
| Super 2 | W | HDC-57-1 | K10-HDC | D10-HDC | 49-833 | 49-807 |
| Super 2 | W | HDC-65-1 | K10-HDC | D10-HDC | 49-833 | 49-807 |
| Super 2 VI | W | HDC-37-1 | K10-HDC | D10-HDC | 49-833 | 49-807 |
| Super 2 VI | W | HDC-41-1 | K10-HDC | D10-HDC | 49-833 | 49-807 |
| Super 2 VI | W | HDC-67-1 | K10-HDC | D10-HDC | 49-833 | 49-807 |
| Super 2 VI | W | HDC-58-1 | K10-HDC | D10-HDC | 49-833 | 49-807 |
| Super 2 XL VI | W | HDC-67-1 | K10-HDC | D10-HDC | 49-833 | 49-807 |
| Super EZ Auto | W | HDC-44-1 | K10-HDC | D10-HDC | 49-833 | 49-807 |
| Super EZ Auto | W | HDC-64-1 | K10-HDC | D10-HDC | 49-833 | 49-807 |
| Super XL | W | SDC-29-1 | K10-SDC | D10-SDC | 49-834 | 49-810 |
| Super XL | W | SDC-62-1 | K10-SDC | D10-SDC | 49-834 | 49-810 |
| Super XL | W | SDC-8-1 | K10-SDC | D10-SDC | 49-834 | 49-810 |
| Super XL | W | SDC-87-1 | K10-SDC | D10-SDC | 49-834 | 49-810 |
| Super XL 922 | W | SDC-82-1 | K10-SDC | D10-SDC | 49-834 | 49-810 |

| OEM ENGINE/UNIT | | WALBRO CARBURETOR | | | OREGON | |
|---|---|---|---|---|---|---|
| Model | Carb | № | Kit | Gaskets | Kit | Gaskets |
| **Homelite/John Deere** | | | | | | |
| Super XL 925 | W | SDC-82-1 | K10-SDC | D10-SDC | 49-834 | 49-810 |
| Super XL Auto | W | SDC-62-1 | K10-SDC | D10-SDC | 49-834 | 49-810 |
| Super XL Auto | W | SDC-8-1 | K10-SDC | D10-SDC | 49-834 | 49-810 |
| SX135 | Z | C1U-H29 | RB-29 | GND-18 | 49-285 | |
| SXL | Z | C2-20-02 | RB-15 | GND-8 | 49-836-0 | 49-860 |
| SXL 130 | T | HS-125B | RK-23HS | DG-5HS | 49-803 | 49-802 |
| SXL 925 | T | HS-151A | RK-23HS | DG-5HS | 49-803 | 49-802 |
| SXL 925 | W | WJ-27-1 | K11-WJ | D11-WJ | | |
| SXL Auto | T | HS-4D | RK-23HS | DG-5HS | 49-803 | 49-802 |
| TLE 43 FD | W | WYA-27-1 | K20-WYA | D20-WYA | | |
| Ultra "E" | W | WT-339-1 | K10-WAT | D10-WAT | 49-816 | 49-812 |
| Ultra "E" | W | WT-405-1 | K10-WAT | D10-WAT | 49-816 | 49-812 |
| Ultra 25 cc | W | WT-363-1 | K20-WAT | D20-WAT | 49-831 | 49-844 |
| Ultra 25 cc | W | WT-458-1 | K20-WAT | D20-WAT | 49-831 | 49-844 |
| Ultra 25 cc (Sears) | W | WT-476-1 | K10-WAT | D10-WAT | 49-816 | 49-812 |
| Unspecified | W | WT-10-1 | K10-WAT | D10-WAT | 49-816 | 49-812 |
| Unspecified | W | WT-654-1 | K20-WAT | D20-WAT | 49-831 | 49-844 |
| Unspecified | W | WT-169-1 | K20-WAT | D10-WAT | 49-831 | 49-812 |
| Unspecified | W | WT-212-1 | K20-WAT | D10-WAT | 49-831 | 49-812 |
| Unspecified | W | WT-80-1 | K20-WAT | D10-WAT | 49-831 | 49-812 |
| Unspecified | W | WT-420-1 | K10-WAT | D10-WAT | 49-816 | 49-812 |
| Unspecified | W | WT-469-1 | K10-WAT | D10-WAT | 49-816 | 49-812 |
| Unspecified | W | HDA-20-1 | K20-HDA | D10-HDA | 49-845 | |
| Unspecified | W | HDA-20-1 | K20-HDA | D10-HDA | 49-845 | |
| Unspecified | W | HDB-17-1 | K10-HDB | D10-HDB | 49-832 | 49-806 |
| Unspecified | W | HDC-74-1 | K10-HDC | D10-HDC | 49-833 | 49-807 |
| Unspecified | W | WYJ-37-1 | K20-WYJ | D20-WYJ | 49-882 | |
| Unspecified | W | WA-191-1 | K10-WAT | D10-WAT | 49-816 | 49-812 |
| Unspecified | W | WA-38-1 | K10-WAT | D10-WAT | 49-816 | 49-812 |
| Unspecified | W | WY-18-1 | K10-WY | D10-WY | 49-875 | 49-839 |
| Unspecified | W | WY-21-1 | K10-WY | D10-WY | 49-875 | 49-839 |
| Unspecified | W | WYL-23-1 | K20-WYL | D11-WYL | | |
| Unspecified | W | WYL-3-1 | K20-WYL | D11-WYL | | |
| Unspecified | W | WYJ-104-1 | K20-WYJ | D20-WYJ | 49-882 | |
| Unspecified | W | WYJ-136-1 | K20-WYJ | D20-WYJ | 49-882 | |
| Unspecified | W | WY-50-1 | K10-WY | D10-WY | 49-875 | 49-839 |
| Unspecified | W | WT-212-1 | K20-WAT | D10-WAT | 49-831 | 49-812 |
| VI 130 | W | SDC-81-1 | K10-SDC | D10-SDC | 49-834 | 49-810 |
| VI Super 2 | W | HDA-64-1 | K20-HDA | D10-HDA | 49-845 | |
| XL | Z | C2S-H5 | RB-19 | GND-9 | 49-821-0 | |
| XL | Z | C2S-H5 | RB-19 | GND-9 | 49-821-0 | |
| XL | W | HDC-28-1 | K10-HDC | D10-HDC | 49-833 | 49-807 |
| XL | W | HDC-42-1 | K10-HDC | D10-HDC | 49-833 | 49-807 |
| XL | W | HDC-49-1 | K10-HDC | D10-HDC | 49-833 | 49-807 |
| XL | W | HDC-55-1 | K10-HDC | D10-HDC | 49-833 | 49-807 |
| XL | W | HDC-48-1 | K10-HDC | D10-HDC | 49-833 | 49-807 |
| XL 101 | W | SDC-1-1 | K10-SDC | D10-SDC | 49-834 | 49-810 |
| XL 102 | W | SDC-1-1 | K10-SDC | D10-SDC | 49-834 | 49-810 |
| XL 103 | W | SDC-1-1 | K10-SDC | D10-SDC | 49-834 | 49-810 |
| XL 104 | W | SDC-1-1 | K10-SDC | D10-SDC | 49-834 | 49-810 |
| XL 12 | W | SDC-29-1 | K10-SDC | D10-SDC | 49-834 | 49-810 |
| XL 12 | W | SDC-48-1 | K10-SDC | D10-SDC | 49-834 | 49-810 |
| XL 12 | W | SDC-62-1 | K10-SDC | D10-SDC | 49-834 | 49-810 |
| XL 12 | W | SDC-8-1 | K10-SDC | D10-SDC | 49-834 | 49-810 |
| XL 12 Auto | W | SDC-29-1 | K10-SDC | D10-SDC | 49-834 | 49-810 |
| XL 12 Auto | W | SDC-62-1 | K10-SDC | D10-SDC | 49-834 | 49-810 |
| XL 12 Auto | W | SDC-8-1 | K10-SDC | D10-SDC | 49-834 | 49-810 |
| XL 123 | W | SDC-31-1 | K10-SDC | D10-SDC | 49-834 | 49-810 |
| XL 150 Mini Auto | W | HDC-3-1 | K10-HDC | D10-HDC | 49-833 | 49-807 |
| XL 2 | W | HDC-15-1 | K10-HDC | D10-HDC | 49-833 | 49-807 |
| XL 2 | W | HDC-28-1 | K10-HDC | D10-HDC | 49-833 | 49-807 |
| XL 2 | W | HDC-42-1 | K10-HDC | D10-HDC | 49-833 | 49-807 |
| XL 2 | W | HDC-48-1 | K10-HDC | D10-HDC | 49-833 | 49-807 |
| XL 2 | W | HDC-49-1 | K10-HDC | D10-HDC | 49-833 | 49-807 |
| XL 2 | W | HDC-55-1 | K10-HDC | D10-HDC | 49-833 | 49-807 |
| XL 2 F | W | HDC-35-1 | K10-HDC | D10-HDC | 49-833 | 49-807 |
| XL 2 S | W | HDC-35-1 | K10-HDC | D10-HDC | 49-833 | 49-807 |
| XL 2 VI | W | HDC-49-1 | K10-HDC | D10-HDC | 49-833 | 49-807 |
| XL 76 | T | HS-125B | RK-23HS | DG-5HS | 49-803 | 49-802 |
| XL 921 | T | HS-151A | RK-23HS | DG-5HS | 49-803 | 49-802 |

CARB = Original OEM Carburetor

**B** = Bing
**N** = Nikki
**T** = Tillotson
**TK** = Teiki
**W** = Walbro
**Z** = Zama

*** No model information available

C

# Carburetor Kit Application Chart

| OEM ENGINE/UNIT | | WALBRO CARBURETOR | | | OREGON | |
|---|---|---|---|---|---|---|
| Model | Carb | № | Kit | Gaskets | Kit | Gaskets |
| **Homelite/John Deere** | | | | | | |
| XL 98 C | W | WJ-26-1 | K11-WJ | D11-WJ | | |
| XL 98 D | W | WJ-54-1 | K11-WJ | D11-WJ | | |
| XL Mini | W | HDC-1-1 | K10-HDC | D10-HDC | 49-833 | 49-807 |
| XL Mini Auto | W | HDC-1-1 | K10-HDC | D10-HDC | 49-833 | 49-807 |
| XL-12 | T | HS-179B | RK-23HS | DG-5HS | 49-803 | 49-802 |
| XL-12 | T | HS-195A | RK-23HS | DG-5HS | 49-803 | 49-802 |
| XL-12 | Z | C2-20-02 | RB-15 | GND-8 | 49-836-0 | 49-860 |
| XL-12 | Z | C2S-H5 | RB-19 | GND-9 | 49-821-0 | |
| XL-12 | Z | C2S-H5 | RB-19 | GND-9 | 49-821-0 | |
| XL-500 | T | HS-4D | RK-23HS | DG-5HS | 49-803 | 49-802 |
| XL-98 | T | HS-135B | RK-23HS | DG-5HS | 49-803 | 49-802 |
| XLS 1A | T | HS-5C | RK-23HS | DG-5HS | 49-803 | 49-802 |
| **Honda** | | | | | | |
| BC/ST | Z | C1Q-SK8 | RB-68 | GND-17 | | 49-880 |
| BC/ST | Z | C1Q-SK10 | RB-68 | GND-17 | | 49-880 |
| GX 100 | W | HDA-201-1 | K12-HDA | D11-HDA | | |
| GX 100 | W | HDA-206-1 | K12-HDA | D11-HDA | | |
| GX 100 | W | HDA-201-1 | K12-HDA | D11-HDA | | |
| GX 22 | W | WYL-130-1 | K20-WYL | D11-WYL | | |
| GX 22 | W | WYL-126-1 | K20-WYL | D11-WYL | | |
| GX 22 | W | WYL-129-1 | K20-WYL | D11-WYL | | |
| GX 22 | W | WYL-131-1 | K20-WYL | D11-WYL | | |
| GX 22 | W | WYL-73-1 | K20-WYL | D11-WYL | | |
| GX 22 | W | WYL-96-1 | K20-WYL | D11-WYL | | |
| GX 22 | W | WYL-67-1 | K20-WYL | D11-WYL | | |
| GX 22 | W | WYL-62-1 | K20-WYL | D11-WYL | | |
| GX 22 | W | WYL-128-1 | K20-WYL | D11-WYL | | |
| GX 22 | W | WYL-132-1 | K20-WYL | D11-WYL | | |
| GX 22 | W | WYL-83-1 | K20-WYL | D11-WYL | | |
| GX 22 | W | WYL-98-1 | K20-WYL | D11-WYL | | |
| GX 22 | W | WYL-82-1 | K20-WYL | D11-WYL | | |
| GX 31 | W | WYL-68-1 | K20-WYL | D11-WYL | | |
| GX 31 | W | WYL-97-1 | K20-WYL | D11-WYL | | |
| GX 31 | W | WYL-75-1 | K20-WYL | D11-WYL | | |
| GX 31 | W | WYL-74-1 | K20-WYL | D11-WYL | | |
| GX 31 | W | WYL-127-1 | K20-WYL | D11-WYL | | |
| GX 31 | W | WYL-133-1 | K20-WYL | D11-WYL | | |
| GX 31 | W | WYL-63-1 | K20-WYL | D11-WYL | | |
| GX 31 | W | WYL-135-1 | K20-WYL | D11-WYL | | |
| GX 31 | W | WYL-99-1 | K20-WYL | D11-WYL | | |
| GX 31 | W | WYL-78-1 | K20-WYL | D11-WYL | | |
| GX 31 | W | WYL-79-1 | K20-WYL | D11-WYL | | |
| GX 31 | W | WYL-134-1 | K20-WYL | D11-WYL | | |
| GX 31 | W | WYL-97-1 | K20-WYL | D11-WYL | | |
| GX100 | W | HDA-228-1 | K20-HDA | D20-HDA | 49-845 | 49-835 |
| GX100 | W | HDA-234-1 | K20-HDA | D11-HDA | 49-845 | |
| GX25 | W | WYB-6-1 | K10-WYB | D10-WYB | | |
| GX25 | W | WYB-8-1 | K10-WYB | D10-WYB | | |
| GX25 | W | WYB-7-1 | K10-WYB | D10-WYB | | |
| GX25 | W | WYB-10 | K10-WYB | D10-WYB | | |
| GX25 | W | WYB-12-1 | K10-WYB | D10-WYB | | |
| GX-25 | W | WYB-17-1 | K10-WYB | D10-WYB | | |
| GX-25 | W | WYB-18-1 | K10-WYB | D10-WYB | | |
| GX-25 | W | WYB-9-1 | K10-WYB | D10-WYB | | |
| GX-25 | W | WYB-21-1 | K10-WYB | D10-WYB | | |
| GX31 | W | WYL-166-1 | K10-WYB | D10-WYB | | |
| GX-35 | W | WYB-16-1 | K10-WYB | D10-WYB | | |
| GX-35 | W | WYB-15-1 | K10-WYB | D10-WYB | | |
| GX-35 | W | WYB-14-1 | K10-WYB | D10-WYB | | |
| GX-35 | W | WYB-22-1 | K10-WYB | D10-WYB | | |
| GX-35 | W | WYB-23-1 | K10-WYB | D10-WYB | | |
| GX-35 | W | WYB-24-1 | K10-WYB | D10-WYB | | |
| ZM 3 | W | WYL-105-1 | K20-WYL | D11-WYL | | |
| ZM 3A | W | WYL-62-1 | K20-WYL | D11-WYL | | |
| ZM 5 | W | WYL-115-1 | K20-WYL | D11-WYL | | |
| ZM 5A | W | WYL-74-1 | K20-WYL | D11-WYL | | |
| ZM 5A | W | WYL-75-1 | K20-WYL | D11-WYL | | |
| ZODA | W | HDA-201-1 | K12-HDA | D11-HDA | | |
| ZODA | W | HDA-206A | K12-HDA | D11-HDA | | |

CARB = Original OEM Carburetor

**B** = Bing
**N** = Nikki
**T** = Tillotson
**TK** = Teiki
**W** = Walbro
**Z** = Zama

*** No model information available

| OEM ENGINE/UNIT | | WALBRO CARBURETOR | | | OREGON | |
|---|---|---|---|---|---|---|
| Model | Carb | № | Kit | Gaskets | Kit | Gaskets |
| ZODA | W | HDA-201-1 | K12-HDA | D11-HDA | | |
| **Husqvarna** | | | | | | |
| 33 | W | WT-98-1 | K20-WAT | D10-WAT | 49-831 | 49-812 |
| 33 | W | WT-67A | K20-WAT | D10-WAT | 49-831 | 49-812 |
| 40 | Z | C1Q-EL1 | RB-45 | GND-33 | | 49-884 |
| 42 | W | HDA-34-1 | K20-HDA | D10-HDA | 49-845 | |
| 42 | W | HDA-108-1 | K20-HDA | D10-HDA | 49-845 | |
| **Husqvarna** | | | | | | |
| 42 | W | HDA-84-1 | K20-HDA | D10-HDA | 49-845 | |
| 42 | W | HDA-98-1 | K20-HDA | D10-HDA | 49-845 | |
| 44 | W | HDA-24-1 | K20-HDA | D10-HDA | 49-845 | |
| 44 | W | HDC-32-1 | K10-HDC | D10-HDC | 49-833 | 49-807 |
| 44 | W | HDC-51-1 | K10-HDC | D10-HDC | 49-833 | 49-807 |
| 45 | Z | C1Q-EL1 | RB-45 | GND-33 | | 49-884 |
| 45 | Z | C1Q-EL5 | RB-45 | GND-33 | | 49-884 |
| 49 | Z | C1Q-EL1 | RB-45 | GND-33 | | 49-884 |
| 49 | Z | C1Q-EL5 | RB-45 | GND-33 | | 49-884 |
| 51 | Z | C1Q-EL6 | RB-45 | GND-33 | | 49-884 |
| 51 | Z | C1Q-EL7 | RB-45 | GND-33 | | 49-884 |
| 51 | W | WT-170-1 | K20-WAT | D10-WAT | 49-831 | 49-812 |
| 55 | Z | C1Q-EL6 | RB-45 | GND-33 | | 49-884 |
| 55 | Z | C1Q-EL7 | RB-45 | GND-33 | | 49-884 |
| 55 | W | WT-170-1 | K20-WAT | D10-WAT | 49-831 | 49-812 |
| 61 | T | HS-163A | RK-23HS | DG-5HS | 49-803 | 49-802 |
| 61 | W | WJ-40-1 | K10-WJ | D10-WJ | 49-873 | 49-843 |
| 65 | T | HS-123A | RK-23HS | DG-5HS | 49-803 | 49-802 |
| 66 | T | HS-224A | RK-23HS | DG-5HS | 49-803 | 49-802 |
| 77 | T | HS-123A | RK-23HS | DG-5HS | 49-803 | 49-802 |
| 133 | W | HDA-1-1 | K20-HDA | D10-HDA | 49-845 | |
| 133 | W | HDA-12-1 | K20-HDA | D10-HDA | 49-845 | |
| 162 | T | HS-163A | RK-23HS | DG-5HS | 49-803 | 49-802 |
| 162 | W | WS-17-1 | K10-WS | D10-WS | | 49-814 |
| 234 | W | HDA-12-1 | K20-HDA | D10-HDA | 49-845 | |
| 234 | W | HDA-19-1 | K20-HDA | D10-HDA | 49-845 | |
| 238 | W | HDA-19-1 | K20-HDA | D10-HDA | 49-845 | |
| 238 | W | HDA-34-1 | K20-HDA | D10-HDA | 49-845 | |
| 242 | W | HDA-108-1 | K20-HDA | D10-HDA | 49-845 | |
| 242 | W | HDA-84-1 | K20-HDA | D10-HDA | 49-845 | |
| 242 | W | HDA-98-1 | K20-HDA | D10-HDA | 49-845 | |
| 254 | W | HDA-101-1 | K20-HDA | D10-HDA | 49-845 | |
| 254 | W | HDA-107-1 | k20-HDA | D10-HDA | 49-845 | |
| 254 | W | HDA-35-1 | K20-HDA | D10-HDA | 49-845 | |
| 262 | W | HDA-117-1 | K20-HDA | D10-HDA | 49-845 | |
| 262 | W | HDA-120-1 | K20-HDA | D10-HDA | 49-845 | |
| 262 | W | HDA-87-1 | K20-HDA | D10-HDA | 49-845 | |
| 262 | W | HDA-144-1 | K20-HDA | D10-HDA | 49-845 | |
| 262 | W | HDA-144-1 | K20-HDA | D10-HDA | 49-845 | |
| 262 | W | HDA-144-1 | K20-HDA | D10-HDA | 49-845 | |
| 272 | T | HS-260A | RK-23HS | DG-5HS | 49-803 | 49-802 |
| 288 | T | HS-228C | RK-23HS | DG-5HS | 49-803 | 49-802 |
| 298 | T | HS-136C | RK-23HS | DG-5HS | 49-803 | 49-802 |
| 340 | Z | C3-EL18 | RB-122 | GND-65 | | |
| 345 | Z | C3-EL18 | RB-122 | GND-65 | | |
| 350 | Z | C3-EL18 | RB-122 | GND-65 | | |
| 351 | Z | C3-EL17 | RB-122 | GND-65 | | |
| 351 | Z | C3-EL18 | RB-122 | GND-65 | | |
| 353 | Z | C3-EL17 | RB-122 | GND-65 | | |
| 353 | Z | C3-EL18 | RB-122 | GND-65 | | |
| 355 | Z | C3-EL15 | RB-95 | GND-54 | | 49-874 |
| 355 | Z | C3-EL16 | RB-95 | GND-54 | | 49-874 |
| 360 | W | WT-98-1 | K20-WAT | D10-WAT | 49-831 | 49-812 |
| 365 | Z | C3M-EL2 | RB-60 | GND-24 | | |
| 365 | Z | C3M-EL8 | RB-60 | GND-24 | | |
| 370 | W | WT-98-1 | K20-WAT | D10-WAT | 49-831 | 49-812 |
| 371 | W | HD-20-1 | K20-HD | D10-HD | | 49-847 |
| 371 | W | HD-30-1 | K20-HD | D10-HD | | 49-847 |
| 394 | W | WJ-39 | K10-WJ | D10-WJ | 49-873 | 49-843 |
| 394 | W | WJ-70-1 | K10-WJ | D10-WJ | 49-873 | 49-843 |
| 394 | W | WJ-71-1 | K13-WJ | D10-WJ | | 49-843 |
| 440 | W | HDA-68-1 | K20-HDA | D10-HDA | 49-845 | |
| 444 | W | HDC-51-1 | K10-HDC | D10-HDC | 49-833 | 49-807 |
| 450 | W | HDA-52-1 | K20-HDA | D10-HDA | 49-845 | |
| 525 | W | HDA-52-1 | K20-HDA | D10-HDA | 49-845 | |
| 700 | W | WJ-1-1 | K10-WJ | D10-WJ | 49-873 | 49-843 |
| 750 | Z | C3-EL29 | RB-133 | GND-73 | | |
| 2051 | W | HDA-68-1 | K20-HDA | D10-HDA | 49-845 | |
| 2054 | W | HDA-143-1 | K20-HDA | D10-HDA | 49-845 | |
| 2054 | W | HDA-119-1 | K20-HDA | D10-HDA | 49-845 | |

C

# Carburetor Kit Application Chart

| OEM ENGINE/UNIT | | WALBRO CARBURETOR | | | OREGON | |
|---|---|---|---|---|---|---|
| Model | Carb | № | Kit | Gaskets | Kit | Gaskets |
| **Husqvarna** | | | | | | |
| 2055 | W | HDA-119-1 | K20-HDA | D10-HDA | 49-845 | |
| 2055 | W | HDA-143-1 | K20-HDA | D10-HDA | 49-845 | |
| 2077 | W | WJ-106-1 | K12-WJ | D11-WJ | | |
| 2077 | W | WJ-77-1 | K13-WJ | D10-WJ | | 49-843 |
| 2100 | T | HS-136C | RK-23HS | DG-5HS | 49-803 | 49-802 |
| 3120 | W | WG-10-1 | K12-WG | D12-WG | | |
| 140 S | W | HDC-32-1 | K10-HDC | D10-HDC | 49-833 | 49-807 |
| 140R | T | HU-37C | RK-14HU | DG-3HU | 49-805 | 49-804 |
| 16 R | W | WA-74-1 | K10-WAT | D10-WAT | 49-816 | 49-812 |
| 165RX | T | HS-121A | RK-23HS | DG-5HS | 49-803 | 49-802 |
| 185K | T | HS-175D | RK-23HS | DG-5HS | 49-803 | 49-802 |
| 22 R | W | WY-55-1 | K10-WY | D10-WY | 49-875 | 49-839 |
| 22 R | W | WY-55-1 | K10-WY | D10-WY | 49-875 | 49-839 |
| 22 RL | W | WY-55-1 | K10-WY | D10-WY | 49-875 | 49-839 |
| 225 HT | W | WT-450-1 | K10-WAT | D10-WAT | 49-816 | 49-812 |
| 225 R | W | WT-270-1 | K10-WAT | D10-WAT | 49-816 | 49-812 |
| 225 R | W | WT-573-1 | K20-WAT | D20-WAT | 49-831 | 49-844 |
| 225 R | W | WT-548-1 | K10-WAT | D10-WAT | 49-816 | 49-812 |
| 225 R | W | WT-449-1 | K10-WAT | D10-WAT | 49-816 | 49-812 |
| 225 R | W | WT-406-1 | K10-WAT | D10-WAT | 49-816 | 49-812 |
| 232 R | W | WT-548-1 | K10-WAT | D10-WAT | 49-816 | 49-812 |
| 232 R | W | WT-573-1 | K20-WAT | D20-WAT | 49-831 | 49-844 |
| 232 R | W | WT-270-1 | K10-WAT | D10-WAT | 49-816 | 49-812 |
| 235 R | W | WT-270-1 | K10-WAT | D10-WAT | 49-816 | 49-812 |
| 235 R | W | WT-573-1 | K20-WAT | D20-WAT | 49-831 | 49-844 |
| 235 R | W | WT-548-1 | K10-WAT | D10-WAT | 49-816 | 49-812 |
| 240 S | W | HDC-32-1 | K10-HDC | D10-HDC | 49-833 | 49-807 |
| 240 SE | W | HDC-32-1 | K10-HDC | D10-HDC | 49-833 | 49-807 |
| 240 SG | W | HDC-32-1 | K10-HDC | D10-HDC | 49-833 | 49-807 |
| 244 RX | W | WT-17-1 | K20-WAT | D10-WAT | 49-831 | 49-812 |
| 244 RX | W | WT-99-1 | K20-WAT | D10-WAT | 49-831 | 49-812 |
| 25 R | W | WY-55-1 | K10-WY | D10-WY | 49-875 | 49-839 |
| 25 RL | W | WY-55-1 | K10-WY | D10-WY | 49-875 | 49-839 |
| 250 RX | W | HDA-142-1 | K21-HDA | D10-HDA | | |
| 250 RX | W | HDA-86-1 | K20-HDA | D10-HDA | 49-845 | |
| 252 RX | W | HDA-142-1 | K21-HDA | D10-HDA | | |
| 265RX | T | HS-121A | RK-23HS | DG-5HS | 49-803 | 49-802 |
| 322L | Z | C1Q-EL11 | RB-69 | GND-39 | 49-904 | |
| 323HD | Z | C1Q-EL14 | RB-69 | GND-39 | 49-904 | |
| 323L | Z | C1Q-EL11 | RB-69 | GND-39 | 49-904 | |
| 323L | Z | C1Q-EL12 | RB-69 | GND-39 | 49-904 | |
| 325 HS | Z | C1Q-EL26 | RB-69 | GND-39 | 49-904 | |
| 325HDA | Z | C1Q-EL13 | RB-69 | GND-39 | 49-904 | |
| 325HE | Z | C1Q-EL13 | RB-69 | GND-39 | 49-904 | |
| 325HS | Z | C1Q-EL13 | RB-69 | GND-39 | 49-904 | |
| 325L | Z | C1Q-EL11 | RB-69 | GND-39 | 49-904 | |
| 325L | Z | C1Q-EL12 | RB-69 | GND-39 | 49-904 | |
| 325R | Z | C1Q-EL14 | RB-69 | GND-39 | 49-904 | |
| 326 HS | Z | C1Q-EL25 | RB-69 | GND-39 | 49-904 | |
| 326L | Z | C1Q-EL12 | RB-69 | GND-39 | 49-904 | |
| 326R | Z | C1Q-EL14 | RB-69 | GND-39 | 49-904 | |
| 335 Base Primer | Z | C1Q-EL20 | RB-109 | GND-59 | | |
| 335 External Purge | Z | C1Q-EL19 | RB-108 | GND-39 | | |
| 34 cc | W | WT-13-1 | K20-WAT | D10-WAT | 49-831 | 49-812 |
| 343F | Z | C1Q-EL21 | RB-41 | GND-35 | 49-898 | |
| 343R | Z | C1Q-EL22 | RB-41 | GND-35 | 49-898 | |
| 345FX | Z | C1Q-EL21 | RB-41 | GND-35 | 49-898 | |
| 345RX | Z | C1Q-EL22 | RB-41 | GND-35 | 49-898 | |
| 346XPT | Z | C3-EL17 | RB-122 | GND-65 | | |
| 346XPT | Z | C3-EL18 | RB-122 | GND-65 | | |
| 36R | T | HU-37C | RK-14HU | DG-3HU | 49-805 | 49-804 |
| 37 BR | W | WT-13-1 | K20-WAT | D10-WAT | 49-831 | 49-812 |
| 371 XP | W | HD-6B-1 | K10-HD | D10-HD | 49-849 | 49-847 |
| 371 XP | W | HD-12-1 | K10-HD | D10-HD | 49-849 | 49-847 |
| 371 XP | W | HD-12-1 | K10-HD | D10-HD | 49-849 | 49-847 |
| 371 XP | W | HD-6-1 | K10-HD | D10-HD | 49-849 | 49-847 |
| 371 XP | W | HD-6-1 | K10-HD | D10-HD | 49-849 | 49-847 |
| 39 R | W | WT-17-1 | K20-WAT | D10-WAT | 49-831 | 49-812 |
| 61 P | W | WS-17-1 | K10-WS | D10-WS | | 49-814 |
| A 55 | W | WJ-1-1 | K10-WJ | D10-WJ | 49-873 | 49-843 |
| A 55 | W | WS-10-1 | K10-WS | D10-WS | | 49-814 |
| B440 | T | HU-37C | RK-14HU | DG-3HU | 49-805 | 49-804 |
| F 55 | W | WJ-1-1 | K10-WJ | D10-WJ | 49-873 | 49-843 |
| F 55 | W | WS-10-1 | K10-WS | D10-WS | | 49-814 |
| F 65 | W | WJ-1-1 | K10-WJ | D10-WJ | 49-873 | 49-843 |
| F 65 | W | WS-10-1 | K10-WS | D10-WS | | 49-814 |
| H 225 R | W | WT-500-1 | K10-WAT | D10-WAT | 49-816 | 49-812 |
| H 225 R | W | WT-421-1 | K10-WAT | D10-WAT | 49-816 | 49-812 |
| H 232 | W | WT-398-1 | K10-WAT | D10-WAT | 49-816 | 49-812 |
| H 235 R | W | WT-398-1 | K10-WAT | D10-WAT | 49-816 | 49-812 |

| OEM ENGINE/UNIT | | WALBRO CARBURETOR | | | OREGON | |
|---|---|---|---|---|---|---|
| Model | Carb | № | Kit | Gaskets | Kit | Gaskets |
| **Husqvarna** | | | | | | |
| H 235 R | W | WT-408-1 | K10-WAT | D10-WAT | 49-816 | 49-812 |
| H 245 | W | HDA-187-1 | K22-HDA | D22-HDA | 49-853 | 49-852 |
| H 3120 | W | WG-4-1 | K20-WGA | D10-WGA | | |
| H 3120 | W | WG-6-1 | K12-WGA | D12-WGA | | |
| H 3120 | W | WG-8-1 | K12-WGA | D12-WGA | | |
| H 3120 | W | WG-7-1 | K12-WG | D12-WG | | |
| H 335 | W | WT-582-1 | K20-WAT | D20-WAT | 49-831 | 49-844 |
| H 335 | W | WT-532-1 | K20-WAT | D10-WAT | 49-831 | 49-812 |
| H 335 | W | WT-560-1 | K20-WAT | D20-WAT | 49-831 | 49-844 |
| H 335 | W | WT-559-1 | K26-WAT | D20-WAT | | 49-844 |
| H 336 | W | WT-559-1 | K26-WAT | D20-WAT | | 49-844 |
| H 336 | W | WT-560-1 | K20-WAT | D20-WAT | 49-831 | 49-844 |
| H 340 | W | HDA-154-1 | K22-HDA | D22-HDA | 49-853 | 49-852 |
| H 345 | W | HDA-154-1 | K22-HDA | D22-HDA | 49-853 | 49-852 |
| H 346 | W | HDA-182-1 | K24-HDA | D20-HDA | | 49-835 |
| H 350 | W | HDA-154-1 | K22-HDA | D22-HDA | 49-853 | 49-852 |
| H 351 | W | HDA-154-1 | K22-HDA | D22-HDA | 49-853 | 49-852 |
| H 40 | W | WT-99-1 | K20-WAT | D10-WAT | 49-831 | 49-812 |
| H181 | T | HS-216C | RK-23HS | DG-5HS | 49-803 | 49-802 |
| H2101 | T | HS-136J | RK-23HS | DG-5HS | 49-803 | 49-802 |
| H266 | T | HS-224A | RK-23HS | DG-5HS | 49-803 | 49-802 |
| H-268 | T | HS-254A | RK-23HS | DG-5HS | 49-803 | 49-802 |
| H268XP | T | HS-234B | RK-23HS | DG-5HS | 49-803 | 49-802 |
| H-268XPS | T | HS-260A | RK-23HS | DG-5HS | 49-803 | 49-802 |
| H-281 | T | HS-228C | RK-23HS | DG-5HS | 49-803 | 49-802 |
| H340 | W | HDA-195-1 | K22-HDA | D22-HDA | 49-853 | 49-852 |
| H346 | W | HDA-197-1 | K23-HDA | D20-HDA | | 49-835 |
| H356 BF | Z | C1Q-EL27 | RB-41 | GND-35 | 49-898 | |
| H480 | T | HS-205A | RK-23HS | DG-5HS | 49-803 | 49-802 |
| H66 | T | HS-224A | RK-23HS | DG-5HS | 49-803 | 49-802 |
| HR 39 | W | WT-99-1 | K20-WAT | D10-WAT | 49-831 | 49-812 |
| K 3120 | W | WG-9-1 | K12-WG | D12-WG | | |
| K 540 | W | WT-353-1 | K20-WAT | D10-WAT | 49-831 | 49-812 |
| P 359 | W | HDA-188-1 | K22-HDA | D22-HDA | 49-853 | 49-852 |
| P 400 | W | WT-17-1 | K20-WAT | D10-WAT | 49-831 | 49-812 |
| P 400 | W | WT-8-1 | K20-WAT | D10-WAT | 49-831 | 49-812 |
| P 400 | W | WT-99-1 | K20-WAT | D10-WAT | 49-831 | 49-812 |
| P 42 | W | WJ-20-1 | K10-WJ | D10-WJ | 49-873 | 49-843 |
| P 42 | W | WJ-9-1 | K10-WJ | D10-WJ | 49-873 | 49-843 |
| P 42 T | W | WJ-21-1 | K10-WJ | D10-WJ | 49-873 | 49-843 |
| P 442 | W | WT-8-1 | K20-WAT | D10-WAT | 49-831 | 49-812 |
| P 52 | W | WJ-20-1 | K10-WJ | D10-WJ | 49-873 | 49-843 |
| P 52 | W | WJ-9-1 | K10-WJ | D10-WJ | 49-873 | 49-843 |
| P 5500 | W | WT-109-1 | K20-WAT | D10-WAT | 49-831 | 49-812 |
| P 600 | W | WT-350-1 | K20-WAT | D10-WAT | 49-831 | 49-812 |
| P 62 | W | WJ-20-1 | K10-WJ | D10-WJ | 49-873 | 49-843 |
| P 62 | W | WJ-9-1 | K10-WJ | D10-WJ | 49-873 | 49-843 |
| P 650 | W | WJ-7-1 | K10-WJ | D10-WJ | 49-873 | 49-843 |
| P 7000 | W | WJ-7-1 | K10-WJ | D10-WJ | 49-873 | 49-843 |
| P 7700 | W | WJ-28-1 | K10-WJ | D10-WJ | 49-873 | 49-843 |
| P 901 | W | HDA-159-1 | K21-HDA | D10-HDA | | |
| P 933 | W | WT-459-1 | K20-WAT | D10-WAT | 49-831 | 49-812 |
| P 933 | W | WT-480-1 | K20-WAT | D10-WAT | 49-831 | 49-812 |
| P 954 | W | HDA-191-1 | K24-HDA | D24-HDA | | |
| P 954 | W | HDA-175-1 | K24-HDA | D24-HDA | | |
| P901 | W | HDA-196-1 | K22-HDA | D22-HDA | 49-853 | 49-852 |
| P901 | Z | C3-EL32 | RB-155 | GND-65 | 0 | |
| P954 | W | HDA-198-1 | K24-HDA | D24-HDA | | |
| P954 | W | HDA-199-1 | K24-HDA | D24-HDA | | |
| P954 | W | HDA-190-1 | K24-HDA | D24-HDA | | |
| PS 50 | W | HDA-142-1 | K21-HDA | D10-HDA | | |
| R 39 | W | WT-17-1 | K20-WAT | D10-WAT | 49-831 | 49-812 |
| R 40 | W | WT-17-1 | K20-WAT | D10-WAT | 49-831 | 49-812 |
| R 8 | W | WT-235-1 | K10-WAT | D10-WAT | 49-816 | 49-812 |
| R15 | Z | C1Q-EL23 | RB-41 | GND-35 | 49-898 | |
| R16 | Z | C1Q-EL24 | RB-69 | GND-39 | 49-904 | |
| R18 | Z | C1Q-EL30 | RB-118 | GND-39 | 0 | |
| Rancher 40 | W | WT-17-1 | K20-WAT | D10-WAT | 49-831 | 49-812 |
| Rancher 50 | W | WA-82-1 | K10-WAT | D10-WAT | 49-816 | 49-812 |
| RS 51 | W | HDA-86-1 | K20-HDA | D10-HDA | 49-845 | |

CARB = Original OEM Carburetor

**B** = Bing
**N** = Nikki
**T** = Tillotson
**TK** = Teiki
**W** = Walbro
**Z** = Zama

*** No model information available

C

# Carburetor Kit Application Chart

| OEM ENGINE/UNIT | | WALBRO CARBURETOR | | | OREGON | |
|---|---|---|---|---|---|---|
| Model | Carb | № | Kit | Gaskets | Kit | Gaskets |
| **Husqvarna** | | | | | | |
| RS 51 | W | HDA-142-1 | K21-HDA | D10-HDA | | |
| Unspecified | W | WT-53-1 | K10-WAT | D10-WAT | 49-816 | 49-812 |
| **IDC (See Ryobi)** | | | | | | |
| **Jonsered** | | | | | | |
| 52 | T | HS-21D | RK-23HS | DG-5HS | 49-803 | 49-802 |
| 70 | T | HS-101C | RK-23HS | DG-5HS | 49-803 | 49-802 |
| 80 | T | HS-101C | RK-23HS | DG-5HS | 49-803 | 49-802 |
| 90 | T | HS-101C | RK-23HS | DG-5HS | 49-803 | 49-802 |
| 410 | T | HK-28C | | DG-1HK | | 49-800 |
| 450 | T | HK-23E | | DG-1HK | | 49-800 |
| 525 | T | HK-23E | | DG-1HK | | 49-800 |
| 535 | T | HK-1A | | DG-1HK | | 49-800 |
| 621 | T | HS-21D | RK-23HS | DG-5HS | 49-803 | 49-802 |
| 1020 | T | HS-172B | RK-23HS | DG-5HS | 49-803 | 49-802 |
| 2041 | Z | C1Q-EL1 | RB-45 | GND-33 | | 49-884 |
| 2045 | Z | C1Q-EL1 | RB-45 | GND-33 | | 49-884 |
| 2045 | Z | C1Q-EL5 | RB-45 | GND-33 | | 49-884 |
| 2050 | Z | C1Q-EL1 | RB-45 | GND-33 | | 49-884 |
| 2050 | Z | C1Q-EL5 | RB-45 | GND-33 | | 49-884 |
| 2065 | Z | C3M-EL2 | RB-60 | GND-24 | | |
| 2065 | Z | C3M-EL8 | RB-60 | GND-24 | | |
| 2141 | Z | C3-EL18 | RB-122 | GND-65 | | |
| 2145 | Z | C3-EL18 | RB-122 | GND-65 | | |
| 2149 | Z | C3-EL17 | RB-122 | GND-65 | | |
| 2149 | Z | C3-EL18 | RB-122 | GND-65 | | |
| 2150 | Z | C3-EL18 | RB-122 | GND-65 | | |
| 2152 | Z | C3-EL17 | RB-122 | GND-65 | | |
| 2152 | Z | C3-EL18 | RB-122 | GND-65 | | |
| 2165 | Z | C3M-EL2 | RB-60 | GND-24 | | |
| 2165 | Z | C3M-EL8 | RB-60 | GND-24 | | |
| BC2125 | Z | C1Q-EL14 | RB-69 | GND-39 | 49-904 | |
| GC2125 | Z | C1Q-EL12 | RB-69 | GND-39 | 49-904 | |
| GT2125 | Z | C1Q-EL12 | RB-69 | GND-39 | 49-904 | |
| J2094 | T | HS-238B | RK-23HS | DG-5HS | 49-803 | 49-802 |
| J2094 | T | HS-265A | RK-23HS | DG-5HS | 49-803 | 49-802 |
| J625 | T | HS-237A | RK-23HS | DG-5HS | 49-803 | 49-802 |
| J625 | T | HS-251A | RK-23HS | DG-5HS | 49-803 | 49-802 |
| J630 | T | HS-218A | RK-23HS | DG-5HS | 49-803 | 49-802 |
| J630 | T | HS-225A | RK-23HS | DG-5HS | 49-803 | 49-802 |
| J630 | T | HS-252A | RK-23HS | DG-5HS | 49-803 | 49-802 |
| J630 REC | T | HS-257A | RK-23HS | DG-5HS | 49-803 | 49-802 |
| J630 S | T | HS-256A | RK-23HS | DG-5HS | 49-803 | 49-802 |
| J670 | T | HS-230C | RK-23HS | DG-5HS | 49-803 | 49-802 |
| J670 | T | HS-250A | RK-23HS | DG-5HS | 49-803 | 49-802 |
| J830 | T | HS-219C | RK-23HS | DG-5HS | 49-803 | 49-802 |
| J930 | T | HS-219C | RK-23HS | DG-5HS | 49-803 | 49-802 |
| K1200 | T | HS-175C | RK-23HS | DG-5HS | 49-803 | 49-802 |
| K650 | T | HS-175C | RK-23HS | DG-5HS | 49-803 | 49-802 |
| RS44 | Z | C1Q-EL10 | | GND-33 | | 49-884 |
| **Kawasaki** | | | | | | |
| 627 | W | WYJ-221-1 | K20-WYJ | D20-WYJ | 49-882 | |
| 627 | W | WYJ-222-1 | K20-WYJ | D20-WYJ | 49-882 | |
| 2680 | W | WYA-59-1 | K20-WYA | D20-WYA | | |
| 2680 | W | WYA-45-1 | K20-WYA | D20-WYA | | |
| 2685 | W | WYA-63-1 | K20-WYA | D20-WYA | | |
| 5727 | W | WYA-69-1 | K20-WYA | D20-WYA | | |
| 163 H/T | W | WYB-5-1 | K10-WYB | D10-WYB | | |
| AC 50 | W | WYK-153-1 | K21-WYK | D21-WYK | | |
| AC 54 | W | WYA-18-1 | K20-WYA | D20-WYA | | |
| AC 63 | W | WYA-19-1 | K20-WYA | D20-WYA | | |
| AF 73 | W | WYJ-302-1 | K20-WYJ | D20-WYJ | 49-882 | |
| AG 20 | W | WYK-128-1 | K13-WYK | D21-WYK | | |
| AG26 | W | WYA-28-1 | K20-WYA | D20-WYA | | |
| EG 20 | W | WYK-141-1 | K21-WYK | D21-WYK | | |
| FC 130 V | W | LMJ-7-1 | K11-LMJ | | | |

CARB = Original OEM Carburetor

**B** = Bing
**N** = Nikki
**T** = Tillotson
**TK** = Teiki
**W** = Walbro
**Z** = Zama

*** No model information available

| OEM ENGINE/UNIT | | WALBRO CARBURETOR | | | OREGON | |
|---|---|---|---|---|---|---|
| Model | Carb | № | Kit | Gaskets | Kit | Gaskets |
| **Kawasaki** | | | | | | |
| FC 180 V | W | LMJ-13-1 | K11-LMJ | | | |
| FC 180 V | W | LMJ-11-1 | K11-LMJ | | | |
| FC 180 V | W | LMJ-9-1 | K11-LMJ | | | |
| FG 20 | W | WYK-140-1 | K21-WYK | D21-WYK | | |
| FH 430 V | W | LMF-1-1 | K1-LMF | | | |
| FH 430 V | W | LMF-1-1 | K1-LMF | | | |
| FH 580V | W | LMF-3-1 | K1-LMF | | | |
| FH-411V | W | LMF-21-1 | K1-LMF | | | |
| FH-411V | W | LMF-20-1 | K1-LMF | | | |
| FH480V | W | LMF-17-1 | K1-LMF | | | |
| FH480V | W | LMF-18-1 | K1-LMF | | | |
| FH541V | W | LMF-14-1 | K1-LMF | | | |
| FH541V | W | LMF-11-1 | K1-LMF | | | |
| FH541V | W | LMF-12-1 | K1-LMF | | | |
| FH541V | W | LMF-7-1 | K1-LMF | | | |
| FH580V | W | LMF-9-1 | K1-LMF | | | |
| FH580V | W | LMF-8-1 | K1-LMF | | | |
| FJ100 | W | LMJ-15-1 | K11-LMJ | | | |
| FJ100 | W | LMJ-18-1 | K11-LMJ | | | |
| FJ100D | W | LMJ-23-1 | K11-LMJ | | | |
| FJ100D | W | LMJ-22-1 | K11-LMJ | | | |
| FJ100D | W | LMJ-25-1 | K11-LMJ | | | |
| FJ100D | W | LMJ-20-1 | K11-LMJ | | | |
| FJ100D | W | LMJ-30-1 | K11-LMJ | | | |
| FJ100D | W | LMJ-27-1 | K11-LMJ | | | |
| FJ100D | W | LMJ-35-1 | K11-LMJ | | | |
| FJ100D | W | LMJ-34-1 | K11-LMJ | | | |
| FJ100D | W | LMJ-27-1 | K11-LMJ | | | |
| FJ180V | W | LMJ-32-1 | K11-LMJ | | | |
| FJ180V | W | LMJ-33-1 | K11-LMJ | | | |
| FJ80V | W | LMJ-17-1 | K11-LMJ | | | |
| FJI80V | W | LMJ-16-1 | K11-LMJ | | | |
| KT 12 ADV | W | WZ-26-1 | K10-WZ | D10-WZ | 49-877 | 49-848 |
| TD 18 D | W | WA-171-1 | K10-WAT | D10-WAT | 49-816 | 49-812 |
| TD 18 DVX | W | WA-170-1 | K10-WAT | D10-WAT | 49-816 | 49-812 |
| TD 18 DVX | W | WA-170-1 | K10-WAT | D10-WAT | 49-816 | 49-812 |
| TD 18 LD | W | WA-160-1 | K10-WAT | D10-WAT | 49-816 | 49-812 |
| TE 040 D | W | HDA-110-1 | K20-HDA | D10-HDA | 49-845 | |
| TE 040 DX | W | HDA-110-1 | K20-HDA | D10-HDA | 49-845 | |
| TE 059 D | W | WYK-128-1 | K13-WYK | D21-WYK | | |
| TE 059 D | W | WYK-153-1 | K21-WYK | D21-WYK | | |
| TE 40 | W | HDA-88-1 | K20-HDA | D10-HDA | 49-845 | |
| TE 40 D | W | HDA-105-1 | K12-HDA | D11-HDA | | |
| TE 40 DX | W | HDA-138-1 | K20-HDA | D10-HDA | 49-845 | |
| TE 45 DX | W | WYK-74-1 | K21-WYK | D21-WYK | | |
| TE 48 | W | HDA-71-1 | K20-HDA | D10-HDA | 49-845 | |
| TE 56 | W | HDA-72-1 | K20-HDA | D10-HDA | 49-845 | |
| TEO 040 D | W | HDA-102-1 | K20-HDA | D10-HDA | 49-845 | |
| TEX 45 D | W | WYA-15-1 | K20-WYA | D20-WYA | | |
| TEX 45 D | W | WYK-91-1 | K21-WYK | D13-WYK | | |
| TEX 45 D | W | WYK-140-1 | K21-WYK | D21-WYK | | |
| TEX 45 D | W | WYA-19-1 | K20-WYA | D20-WYA | | |
| TEX 45 D | W | WYK-106-1 | K21-WYK | D21-WYK | | |
| TEX 45 DX | W | WYK-84-1 | K21-WYK | D13-WYK | | |
| TEX 54 D | W | WYK-95-1 | K21-WYK | D13-WYK | | |
| TEX 54 D | W | WYK-96-1 | K21-WYK | D13-WYK | | |
| TEX 54 D | W | WYK-97-1 | K21-WYK | D13-WYK | | |
| TEX 54 D | W | WYK-100-1 | K21-WYK | D21-WYK | | |
| TEX 54 D | W | WYK-101-1 | K21-WYK | D21-WYK | | |
| TEX 54 D | W | WYA-18-1 | K20-WYA | D20-WYA | | |
| TEX 54 D | W | WYK-141-1 | K21-WYK | D21-WYK | | |
| TEX54D-AE80 | W | WYA-15-1 | K20-WYA | D20-WYA | | |
| TF 022 AF 70 | W | WT-181-1 | K10-WAT | D10-WAT | 49-816 | 49-812 |
| TF 022 BA | W | WY-59-1 | K10-WY | D10-WY | 49-875 | 49-839 |
| TF 022 D | W | WYJ-232-1 | K20-WYJ | D20-WYJ | 49-882 | |
| TF 022 D-AL50 | W | WYJ-310-1 | K20-WYJ | D20-WYJ | 49-882 | |
| TF 22 DVX | W | WY-51-1 | K10-WY | D10-WY | 49-875 | 49-839 |
| TF 22 DVX | W | WT-138-1 | K10-WAT | D10-WAT | 49-816 | 49-812 |
| TF 22 DVX | W | WY-64-1 | K10-WY | D10-WY | 49-875 | 49-839 |
| TF 22 DVX | W | WY-66-1 | K10-WY | D10-WY | 49-875 | 49-839 |
| TF 22 DVX | W | WY-67-1 | K10-WY | D10-WY | 49-875 | 49-839 |
| TF 22 DVX | W | WYJ-127-1 | K20-WYJ | D20-WYJ | 49-882 | |
| TF 22 DVX | W | WYJ-181-1 | K20-WYJ | D20-WYJ | 49-882 | |
| TF 22 DVX | W | WYJ-212-1 | K20-WYJ | D20-WYJ | 49-882 | |
| TF 22 DVX | W | WYJ-229-1 | K20-WYJ | D20-WYJ | 49-882 | |
| TF 22 DVX | W | WYJ-175-1 | K20-WYJ | D20-WYJ | 49-882 | |
| TF 22 DX | W | WT-138-1 | K10-WAT | D10-WAT | 49-816 | 49-812 |
| TF 22D | W | WYJ-302-1 | K20-WYJ | D20-WYJ | 49-882 | |
| TF 24 | W | WY-69-1 | K10-WY | D10-WY | 49-875 | 49-839 |

C

# Carburetor Kit Application Chart

| OEM ENGINE/UNIT | | WALBRO CARBURETOR | | | OREGON | |
|---|---|---|---|---|---|---|
| Model | Carb | № | Kit | Gaskets | Kit | Gaskets |
| **Kawasaki** | | | | | | |
| TF 24 | W | WYJ-116-1 | K20-WYJ | D20-WYJ | 49-882 | |
| TF 24 DVX | W | WYJ-115-1 | K20-WYJ | D20-WYJ | 49-882 | |
| TG 18 | W | WA-205-1 | K10-WAT | D10-WAT | 49-816 | 49-812 |
| TG 18 DVX | W | WA-209-1 | K10-WAT | D10-WAT | 49-816 | 49-812 |
| TG 18 DVX | W | WYJ-231-1 | K20-WYJ | D20-WYJ | 49-882 | |
| TG 18 DVX | W | WYJ-217-1 | K20-WYJ | D20-WYJ | 49-882 | |
| TG 20 | W | WA-205-1 | K10-WAT | D10-WAT | 49-816 | 49-812 |
| TG 24 DX | W | WT-103-1 | K10-WAT | D10-WAT | 49-816 | 49-812 |
| TG 24 DX | W | WT-188-1 | K10-WAT | D10-WAT | 49-816 | 49-812 |
| TG 24 DX | W | WYJ-30-1 | K20-WYJ | D20-WYJ | 49-882 | |
| TG 24 DX | W | WYK-12-1 | K20-WYK | D20-WYK | | |
| TG 25 | W | WYJ-125-1 | K20-WYJ | D20-WYJ | 49-882 | |
| TG 25 DX | W | WYJ-177-1 | K20-WYJ | D20-WYJ | 49-882 | |
| TG 28 DX | W | WYJ-169-1 | K20-WYJ | D20-WYJ | 49-882 | |
| TG 28 DX | W | WYJ-174-1 | K20-WYJ | D20-WYJ | 49-882 | |
| TG 28 DX | W | WA-204-1 | K10-WAT | D10-WAT | 49-816 | 49-812 |
| TG 33 DX | W | WA-204-1 | K10-WAT | D10-WAT | 49-816 | 49-812 |
| TG 33 DX | W | WT-186-1 | K10-WAT | D10-WAT | 49-816 | 49-812 |
| TGX 23 | W | WYL-32-1 | K20-WYL | D11-WYL | | |
| TH 023 D | W | WYL-70-1 | K20-WYL | D11-WYL | | |
| TH 023 D | W | WYA-10-1 | K20-WYA | D20-WYA | | |
| TH 023 D | W | WYJ-234-1 | K20-WYJ | D20-WYJ | 49-882 | |
| TH 023 D | W | WAY-4-1 | K20-WYA | D20-WYA | | |
| TH 023 D-AN24 | W | WYL-80-1 | K20-WYL | D11-WYL | | |
| TH 026 D | W | WYJ-214-1 | K20-WYJ | D20-WYJ | 49-882 | |
| TH 026 D | W | WYJ-188-1 | K20-WYJ | D20-WYJ | 49-882 | |
| TH 026 D | W | WYJ-233-1 | K20-WYJ | D20-WYJ | 49-882 | |
| TH 026 D | W | WYA-11-1 | K20-WYA | D20-WYA | | |
| TH 026 D-AA04 | W | WYJ-294-1 | K20-WYJ | D20-WYJ | 49-882 | |
| TH 026 D-AF71 | W | WYA-22-1 | K20-WYA | D20-WYA | | |
| TH 026 D-AN24 | W | WYJ-223-1 | K20-WYJ | D20-WYJ | 49-882 | |
| TH 026 D-AN24 | W | WYJ-202-1 | K20-WYJ | D20-WYJ | 49-882 | |
| TH 034 D | W | WYJ-256-1 | K20-WYJ | D20-WYJ | 49-882 | |
| TH 034 D | W | WYA-12-1 | K20-WYA | D20-WYA | | |
| TH 034 D-AF71 | W | WYA-23-1 | K20-WYA | D20-WYA | | |
| TH0 34 D-AE02 | W | WYJ-311-1 | K20-WYJ | D20-WYJ | 49-882 | |
| TH034D | W | WYJ-388-1 | K20-WYJ | D20-WYJ | 49-882 | |
| TH023D-AF72 | W | WYA-25-1 | K20-WYA | D20-WYA | | |
| TH023D-AF72 | W | WYA-25-1 | K20-WYA | D20-WYA | | |
| TH023D-AF74 | W | WYJ-352-1 | K20-WYJ | D20-WYJ | 49-882 | |
| TH034D-AA03 | W | WYA-12-1 | K20-WYA | D20-WYA | | |
| **Komatsu Zenoah (Red Max)** | | | | | | |
| 6300 AVS | Z | C1S-Z1 | RB-14 | GND-6 | | 49-896 |
| BC 2310 | W | WYJ-289-1 | K20-WYJ | D20-WYJ | 49-882 | |
| BC 2410 | W | WYK-129-1 | K21-WYK | D21-WYK | | |
| BC 2510 | W | WYJ-290-1 | K20-WYJ | D20-WYJ | 49-882 | |
| BC 254 E | W | WA-105-1 | K10-WAT | D10-WAT | 49-816 | 49-812 |
| BC 260 DUH | W | WY-4-1 | K10-WY | D10-WY | 49-875 | 49-839 |
| BC 2610 | W | WYJ-290-1 | K20-WYJ | D20-WYJ | 49-882 | |
| BC 2710 | W | WYK-130-1 | K20-WYJ | D20-WYJ | 49-882 | |
| BC 3501 D | W | WYK-155-1 | K21-WYK | D20-WYK | | |
| BC24500 | Z | C1Q-Z5 | RB-72 | GND-35 | | |
| BC25000 | Z | C1Q-Z4 | RB-72 | GND-35 | | |
| BCZ2401 | W | WYA-53-1 | K20-WYA | D20-WYA | | |
| BCZ2500DL | W | WYA-1-1 | K20-WYA | D20-WYA | | |
| BCZ2500S | W | WYA-1-1 | K20-WYA | D20-WYA | | |
| BK2650 | W | WYE-4-1 | XXX | XXX | | |
| BKZ4500 | W | WT-795-1 | K10-WAT | D10-WAT | 49-816 | 49-812 |
| BKZ4500 | W | WT-708-1 | K20-WAT | D20-WAT | 49-831 | 49-844 |
| BKZ5000 | W | WT-795-1 | K10-WAT | D10-WAT | 49-816 | 49-812 |
| C 2 LH | W | HDA-110-1 | K20-HDA | D10-HDA | 49-845 | |
| CHT600 | W | WYL-190-1 | K20-WYL | D11-WYL | | |
| D6 | W | WYA-24-1 | K20-WYA | D20-WYA | | |
| EB 430 | W | HDA-80-1 | K20-HDA | D10-HDA | 49-845 | |
| EB 430 | W | HDA-26-1 | K12-HDA | D11-HDA | | |
| EB 431 | W | WYK-67-1 | K21-WYK | D21-WYK | | |
| EB 431 | W | HDA-112-1 | K12-HDA | D11-HDA | | |
| EB 440 | W | HDA-70-1 | K20-HDA | D10-HDA | 49-845 | |
| EB 4400 | W | WYK-132-1 | K21-WYK | D21-WYK | | |
| EB 441 | W | HDA-149-1 | K12-HDA | D11-HDA | | |
| EB 441 | W | HDA-113-1 | K12-HDA | D11-HDA | | |
| EB 6200 | W | WYK-73-1 | K21-WYK | D21-WYK | | |
| EB 7000 | W | WYK-123-1 | K21-WYK | D21-WYK | | |
| EBA 430 | W | HDA-89-1 | K20-HDA | D10-HDA | 49-845 | |
| EBA 431 | W | HDA-150-1 | K12-HDA | D11-HDA | | |
| EBA 431 | W | HDA-139-1 | K20-HDA | D10-HDA | 49-845 | |
| EBA 440 | W | HDA-90-1 | K20-HDA | D10-HDA | 49-845 | |
| EBA 440 | W | HDA-27-1 | K20-HDA | D10-HDA | 49-845 | |

| OEM ENGINE/UNIT | | WALBRO CARBURETOR | | | OREGON | |
|---|---|---|---|---|---|---|
| Model | Carb | № | Kit | Gaskets | Kit | Gaskets |
| **Komatsu Zenoah (Red Max)** | | | | | | |
| EBZ4800 | W | WYA-42-1 | K20-WYA | D20-WYA | | |
| EBZ4800 | W | WYA-51-1 | K20-WYA | D20-WYA | | |
| EH 025P | W | WYL-148-1 | K20-WYL | D11-WYL | | |
| ES 335 | W | WT-569-1 | K20-WAT | D20-WAT | 49-831 | 49-844 |
| G 1 E | W | WA-180-1 | K10-WAT | D10-WAT | 49-816 | 49-812 |
| G 1 E | W | WA-102-1 | K10-WAT | D10-WAT | 49-816 | 49-812 |
| G 1 E | W | HDA-33-1 | K20-HDA | D10-HDA | 49-845 | |
| G 1 KE | W | WA-194-1 | K10-WAT | D10-WAT | 49-816 | 49-812 |
| G 1 KE | W | WA-188-1 | K10-WAT | D10-WAT | 49-816 | 49-812 |
| G 1 KE | W | HDA-41-1 | K20-HDA | D10-HDA | 49-845 | |
| G 2 D | W | WYJ-61-1 | K20-WYJ | D20-WYJ | 49-882 | |
| G 2 D | W | WA-125-1 | K10-WAT | D10-WAT | 49-816 | 49-812 |
| G 2 D30D | W | WY-1-1 | K10-WY | D10-WY | 49-875 | 49-839 |
| G 2 D30D | W | WY-14-1 | K10-WY | D10-WY | 49-875 | 49-839 |
| G 2 D30D | W | WY-63-1 | K10-WY | D10-WY | 49-875 | 49-839 |
| G 2 D39 | W | HDA-93-1 | K20-HDA | D10-HDA | 49-845 | |
| G 2 D39 | W | WY-16-1 | K10-WY | D10-WY | 49-875 | 49-839 |
| G 2 D4 | W | HDA-93-1 | K20-HDA | D10-HDA | 49-845 | |
| G 2 D46 | W | HDA-93-1 | K20-HDA | D10-HDA | 49-845 | |
| G 2 D46 | W | WY-23-1 | K10-WY | D10-WY | 49-875 | 49-839 |
| G 2 D47D | W | HDA-93-1 | K20-HDA | D10-HDA | 49-845 | |
| G 2 D5 | W | WA-197-1 | K10-WAT | D10-WAT | 49-816 | 49-812 |
| G 2 D52 | W | WY-39-1 | K10-WY | D10-WY | 49-875 | 49-839 |
| G 2 D59D | W | WYJ-65-1 | K20-WYJ | D20-WYJ | 49-882 | |
| G 2 D59D | W | WA-197-1 | K10-WAT | D10-WAT | 49-816 | 49-812 |
| G 2 D8 | W | WA-167-1 | K10-WAT | D10-WAT | 49-816 | 49-812 |
| G 2 DPU | W | WA-213-1 | K10-WAT | D10-WAT | 49-816 | 49-812 |
| G 2 E | W | WA-105-1 | K10-WAT | D10-WAT | 49-816 | 49-812 |
| G 2 E | W | WA-177-1 | K10-WAT | D10-WAT | 49-816 | 49-812 |
| G 2 E | W | WA-181-1 | K10-WAT | D10-WAT | 49-816 | 49-812 |
| G 2 K1D | W | WY-4-1 | K10-WY | D10-WY | 49-875 | 49-839 |
| G 2 K30D | W | WY-7-1 | K10-WY | D10-WY | 49-875 | 49-839 |
| G 2 KC | W | WY-62-1 | K10-WY | D10-WY | 49-875 | 49-839 |
| G 2 KC | W | WY-33-1 | K10-WY | D10-WY | 49-875 | 49-839 |
| G 2 KC | W | WY-52-1 | K10-WY | D10-WY | 49-875 | 49-839 |
| G 2 KC | W | WYJ-18-1 | K20-WYJ | D20-WYJ | 49-882 | |
| G 2 KC | W | WYJ-49-1 | K20-WYJ | D20-WYJ | 49-882 | |
| G 2 KC | W | WYJ-9-1 | K20-WYJ | D20-WYJ | 49-882 | |
| G 2 KC | W | WYJ-36-1 | K20-WYJ | D20-WYJ | 49-882 | |
| G 2 KC | W | WYJ-22-1 | K20-WYJ | D20-WYJ | 49-882 | |
| G 2 KC | W | WYJ-76-1 | K20-WYJ | D20-WYJ | 49-882 | |
| G 2 KE | W | WA-189-1 | K10-WAT | D10-WAT | 49-816 | 49-812 |
| G 2 KE | W | WA-187-1 | K10-WAT | D10-WAT | 49-816 | 49-812 |
| G 2 KM | W | WYK-18-1 | K21-WYK | D21-WYK | | |
| G 2 KM | W | WYK-2-1 | K21-WYK | D21-WYK | | |
| G 22 L | W | WYL-51-1 | K20-WYL | D11-WYL | | |
| G 23 L | W | WYJ-110-1 | K20-WYJ | D20-WYJ | 49-882 | |
| G 23 L | W | WYL-54-1 | K20-WYL | D11-WYL | | |
| G 23 L | W | WYL-55-1 | K20-WYL | D11-WYL | | |
| G 23 L | W | WYL-57-1 | K20-WYL | D11-WYL | | |
| G 23 L | W | WYJ-81-1 | K20-WYJ | D20-WYJ | 49-882 | |
| G 23 L | W | WYJ-94-1 | K20-WYJ | D20-WYJ | 49-882 | |
| G 23 L | W | WYL-55-1 | K20-WYL | D11-WYL | | |
| G 23 L | W | WYL-57-1 | K20-WYL | D11-WYL | | |
| G 23 L1 | W | WYJ-113-1 | K20-WYJ | D20-WYJ | 49-882 | |
| G 23 L2 | W | WYJ-89-1 | K20-WYJ | D20-WYJ | 49-882 | |
| G 23 LH | W | WYJ-80-1 | K20-WYJ | D20-WYJ | 49-882 | |
| G 23 LH | W | WYL-118-1 | K20-WYL | D11-WYL | | |
| G 23 LH18 | W | WYJ-121-1 | K20-WYJ | D20-WYJ | 49-882 | |
| G 23 LH2 | W | WYJ-114-1 | K20-WYJ | D20-WYJ | 49-882 | |
| G 230 PU | W | WT-499-1 | K20-WAT | D10-WAT | 49-831 | 49-812 |
| G 230 PU | W | WA-213-1 | K10-WAT | D10-WAT | 49-816 | 49-812 |
| G 230 PU | W | WA-167-1 | K10-WAT | D10-WAT | 49-816 | 49-812 |
| G 230 PU-M | W | WA-197-1 | K10-WAT | D10-WAT | 49-816 | 49-812 |
| G 230 RC | W | WT-603-1 | K20-WAT | D10-WAT | 49-831 | 49-812 |
| G 250 AVT | W | WT-481-1 | K20-WAT | D10-WAT | 49-831 | 49-812 |
| G 2500TS | W | WT-596-1 | K20-WAT | D20-WAT | 49-831 | 49-844 |
| G 26 L | W | WYJ-149-1 | K20-WYJ | D20-WYJ | 49-882 | |
| G 26 L1 | W | WYJ-117-1 | K20-WYJ | D20-WYJ | 49-882 | |
| G 26 L2 | W | WYJ-119-1 | K20-WYJ | D20-WYJ | 49-882 | |

CARB = Original OEM Carburetor

**B** = Bing
**N** = Nikki
**T** = Tillotson
**TK** = Teiki
**W** = Walbro
**Z** = Zama

*** No model information available

C

# Carburetor Kit Application Chart

| OEM ENGINE/UNIT | | WALBRO CARBURETOR | | | OREGON | |
|---|---|---|---|---|---|---|
| Model | Carb | № | Kit | Gaskets | Kit | Gaskets |
| **Komatsu Zenoah (Red Max)** | | | | | | |
| G 27 LS2 | W | WYK-148-1 | K21-WYK | D21-WYK | | |
| G 3 C65 | W | WY-3-1 | K10-WY | D10-WY | 49-875 | 49-839 |
| G 3 K115 | W | WYJ-118-1 | K20-WYJ | D20-WYJ | 49-882 | |
| G 3 K70-D | W | WT-180-1 | K10-WAT | D10-WAT | 49-816 | 49-812 |
| G 300 | W | WA-179-1 | K10-WAT | D10-WAT | 49-816 | 49-812 |
| G 300 AV | W | WT-292-1 | K10-WAT | D10-WAT | 49-816 | 49-812 |
| G 300 AVT | W | WT-292-1 | K10-WAT | D10-WAT | 49-816 | 49-812 |
| G 300 AVT | W | WA-179-1 | K10-WAT | D10-WAT | 49-816 | 49-812 |
| G 310 | W | WT-383-1 | K10-WAT | D10-WAT | 49-816 | 49-812 |
| G 310 AV | W | WT-278-1 | K10-WAT | D10-WAT | 49-816 | 49-812 |
| G 310 AVT | W | WT-278-1 | K10-WAT | D10-WAT | 49-816 | 49-812 |
| G 310 TS | W | WT-279-1 | K10-WAT | D10-WAT | 49-816 | 49-812 |
| G 310 TS | W | WT-487-1 | K20-WAT | D10-WAT | 49-831 | 49-812 |
| G 32 AV | W | WA-192-1 | K10-WAT | D10-WAT | 49-816 | 49-812 |
| G 32 AV | W | WA-112-1 | K10-WAT | D10-WAT | 49-816 | 49-812 |
| G 32 AV | W | WA-174-1 | K10-WAT | D10-WAT | 49-816 | 49-812 |
| G 330 | W | WT-428-1 | K20-WAT | D10-WAT | 49-831 | 49-812 |
| G 34 L | W | WYK-94-1 | K21-WYK | D21-WYK | | |
| G 34 L1-D | W | WYJ-218-1 | K20-WYJ | D20-WYJ | 49-882 | |
| G 34 L-D | W | WYK-94-1 | K21-WYK | D21-WYK | | |
| G 340 AV2 | W | WT-290-1 | K20-WAT | D10-WAT | 49-831 | 49-812 |
| G 340 AVS | W | WT-249-1 | K20-WAT | D10-WAT | 49-831 | 49-812 |
| G 3500 | W | WT-588-1 | K20-WAT | D10-WAT | 49-831 | 49-812 |
| G 361 AV | W | WA-64-1 | K10-WAT | D10-WAT | 49-816 | 49-812 |
| G 365 AV | W | WA-64-1 | K10-WAT | D10-WAT | 49-816 | 49-812 |
| G 370 AV | W | WT-246-1 | K20-WAT | D10-WAT | 49-831 | 49-812 |
| G 370 AV3 | W | WT-291-1 | K20-WAT | D10-WAT | 49-831 | 49-812 |
| G 38 AV | W | WA-193-1 | K10-WAT | D10-WAT | 49-816 | 49-812 |
| G 38 AV | W | WA-173-1 | K10-WAT | D10-WAT | 49-816 | 49-812 |
| G 38 AV | W | WA-113-1 | K10-WAT | D10-WAT | 49-816 | 49-812 |
| G 380 PU | W | WT-338-1 | K20-WAT | D10-WAT | 49-831 | 49-812 |
| G 3800 | W | WT-576-1 | K26-WAT | D26-WAT | | |
| G 3800 AVS-1 | W | WT-591-1 | K20-WAT | D10-WAT | 49-831 | 49-812 |
| G 4 K60-D | W | WYK-4-1 | K21-WYK | D21-WYK | | |
| G 4 K69 | W | WYK-63-1 | K21-WYK | D21-WYK | | |
| G 4 K84 D | W | WYK-4-1 | K21-WYK | D21-WYK | | |
| G 4 K84 D | W | HDA-104-1 | K20-HDA | D10-HDA | 49-845 | |
| G 4 K92 D | W | HDA-62-1 | K12-HDA | D11-HDA | | |
| G 4 KEB431 | W | HDA-136-1 | K20-HDA | D10-HDA | 49-845 | |
| G 4 KEB441 | W | HDA-135-1 | K20-HDA | D10-HDA | 49-845 | |
| G 40 AV | W | WA-97-1 | K10-WAT | D10-WAT | 49-816 | 49-812 |
| G 400 AVS | W | WT-126-1 | K20-WAT | D10-WAT | 49-831 | 49-812 |
| G 400 AVS-1 | W | WT-125-1 | K20-WAT | D10-WAT | 49-831 | 49-812 |
| G 401 AV | W | WA-136-1 | K10-WAT | D10-WAT | 49-816 | 49-812 |
| G 405 AV | W | WA-139-1 | K10-WAT | D10-WAT | 49-816 | 49-812 |
| G 410 | W | WT-147-1 | K10-WAT | D10-WAT | 49-816 | 49-812 |
| G 410 AVS | W | WT-172-1 | K20-WAT | D10-WAT | 49-831 | 49-812 |
| G 410 AVS | W | WT-228-1 | K20-WAT | D10-WAT | 49-831 | 49-812 |
| G 410 AVS-1 | W | WT-296-1 | K20-WAT | D20-WAT | 49-831 | 49-844 |
| G 410 AVS-2 | W | WT-294-1 | K22-WAT | D22-WAT | | |
| G 415 | W | WT-533-1 | K20-WAT | D10-WAT | 49-831 | 49-812 |
| G 415 | W | WT-246-1 | K20-WAT | D10-WAT | 49-831 | 49-812 |
| G 415 | W | WT-509-1 | K20-WAT | D10-WAT | 49-831 | 49-812 |
| G 4200 | W | WT-614-1 | K20-WAT | D10-WAT | 49-831 | 49-812 |
| G 43 L | W | WYK-93-1 | K21-WYK | D13-WYK | | |
| G 43 L | W | WYJ-236-1 | K20-WYJ | D20-WYJ | 49-882 | |
| G 43 L1-D | W | WYJ-219-1 | K20-WYJ | D20-WYJ | 49-882 | |
| G 43 L-D | W | WYK-93-1 | K21-WYK | D13-WYK | | |
| G 43 L-D | W | WYJ-242-1 | K20-WYJ | D20-WYJ | 49-882 | |
| G 450 AVS | W | WT-114-1 | K10-WAT | D10-WAT | 49-816 | 49-812 |
| G 450 AVS-1 | W | WT-116-1 | K20-WAT | D10-WAT | 49-831 | 49-812 |
| G 451 AVS | W | WT-171-1 | K20-WAT | D10-WAT | 49-831 | 49-812 |
| G 451 AVS | W | WT-228-1 | K20-WAT | D10-WAT | 49-831 | 49-812 |
| G 455 | W | WT-208-1 | K20-WAT | D10-WAT | 49-831 | 49-812 |
| G 455 AVS | W | WT-555-1 | K20-WAT | D10-WAT | 49-831 | 49-812 |
| G 455 AVS-1 | W | WT-296-1 | K20-WAT | D20-WAT | 49-831 | 49-844 |
| G 455 AVS-2 | W | WT-295-1 | K22-WAT | D22-WAT | | |
| G 4K60D | W | WYK-33-1 | K21-WYK | D21-WYK | | |
| G 5 K7D | W | WYK-23-1 | K21-WYK | D21-WYK | | |
| G 5 K7D | W | WYK-36-1 | K21-WYK | D21-WYK | | |
| G 50 AV | W | WA-103-1 | K10-WAT | D10-WAT | 49-816 | 49-812 |
| G 500 | W | WT-315-1 | K20-WAT | D20-WAT | 49-831 | 49-844 |
| G 500 | W | WT-281-1 | K20-WAT | D10-WAT | 49-831 | 49-812 |
| G 540 | W | HDA-118-1 | K20-HDA | D10-HDA | 49-845 | |
| G 540 | W | HDA-118-1 | K20-HDA | D10-HDA | 49-845 | |
| G 540 | W | HDA-55-1 | K20-HDA | D10-HDA | 49-845 | |
| G 560 | W | HDA-118-1 | K20-HDA | D10-HDA | 49-845 | |
| G 560 | W | HDA-118-1 | K20-HDA | D10-HDA | 49-845 | |
| G 561 | W | HDA-42-1 | K20-HDA | D10-HDA | 49-845 | |
| G 620 | W | HDA-67-1 | K20-HDA | D10-HDA | 49-845 | |
| G 620 AVS-3 | W | HDA-92-1 | K20-HDA | D10-HDA | 49-845 | |
| G 620 PU | W | HDA-48-1 | K20-HDA | D10-HDA | 49-845 | |
| G 621 AVS | W | HDA-116-1 | K20-HDA | D10-HDA | 49-845 | |
| G 621 AVS | W | HDA-93-1 | K20-HDA | D10-HDA | 49-845 | |
| G 621 AVS-1 | W | HDA-93-1 | K20-HDA | D10-HDA | 49-845 | |
| G 621 AVS-4 | W | HDA-93-1 | K20-HDA | D10-HDA | 49-845 | |
| G 740 BPU | W | WJ-64-1 | K11-WJ | D11-WJ | | |
| G2500EZ | W | WT-756-1 | K20-WAT | D20-WAT | 49-831 | 49-844 |
| G2500EZ | W | WT-756-1 | K20-WAT | D20-WAT | 49-831 | 49-844 |
| G26LS | W | WYJ-409-1 | K20-WYJ | D20-WYJ | 49-882 | |
| G26LS10 | W | WYJ-378-1 | K20-WYJ | D20-WYJ | 49-882 | |
| G26LS51 | W | WYJ-343-1 | K20-WYJ | D20-WYJ | 49-882 | |
| G34L-D | W | WYJ-319-1 | K20-WYJ | D20-WYJ | 49-882 | |
| G415 | W | WT-753-1 | K20-WAT | D20-WAT | 49-831 | 49-844 |
| G455 | W | WT-754-1 | K20-WAT | D20-WAT | 49-831 | 49-844 |
| G4LS24-D | W | WYK-166-1 | K21-WYK | D21-WYK | | |
| G4LS24-D | W | WYK-166-1 | K21-WYK | D21-WYK | | |
| G500 | W | WT-755-1 | K20-WAT | D20-WAT | 49-831 | 49-844 |
| G5000KAZ | W | WT-666-1 | K20-WAT | D10-WAT | 49-831 | 49-812 |
| GE 2 KC | W | WY-52-1 | K10-WY | D10-WY | 49-875 | 49-839 |
| GE2KC10 | W | WYE-1-1 | XXX | XXX | | |
| GZ 23N | W | WYA-29-1 | K20-WYA | D20-WYA | | |
| GZ 25 N | W | WYA-1-1 | K20-WYA | D20-WYA | | |
| GZ 25 N | W | WYA-32-1 | K20-WYA | D20-WYA | | |
| GZ 25 N-10 | W | WYA-2-1 | K20-WYA | D20-WYA | | |
| GZ 25 N-15 | W | WYA-26-1 | K20-WYA | D20-WYA | | |
| GZ 25 N-15 | W | WYA-26-1 | K20-WYA | D20-WYA | | |
| GZ 25 N-3 | W | WYA-4-1 | K20-WYA | D20-WYA | | |
| GZ 25 N-6 | W | WYA-3-1 | K20-WYA | D20-WYA | | |
| GZ30N8 | W | WYA-54-1 | K20-WYA | D20-WYA | | |
| GZ30N8 | W | WYA-36-1 | K20-WYA | D20-WYA | | |
| GZ4000 | Z | C1Q-Z6 | RB-120 | GND-27 | | 49-909 |
| GZ65N | W | WYA-56-1 | K20-WYA | D20-WYA | | |
| HB 260 | W | WT-184-1 | K10-WAT | D10-WAT | 49-816 | 49-812 |
| HB 260 | W | WT-279-1 | K10-WAT | D10-WAT | 49-816 | 49-812 |
| HB 260 B-50 | W | WA-185-1 | K10-WAT | D10-WAT | 49-816 | 49-812 |
| HB 260 C-50 | W | WA-185-1 | K10-WAT | D10-WAT | 49-816 | 49-812 |
| HC 405 AV | W | WA-184-1 | K10-WAT | D10-WAT | 49-816 | 49-812 |
| HC 500 | W | WT-475-1 | K20-WAT | D20-WAT | 49-831 | 49-844 |
| HC 51 OD | W | WT-512-1 | K20-WAT | D20-WAT | 49-831 | 49-844 |
| ht750 | W | WYL-190-1 | K20-WYL | D11-WYL | | |
| MD 430 | W | HDA-26-1 | K12-HDA | D11-HDA | | |
| MD 431 | W | HDA-112-1 | K12-HDA | D11-HDA | | |
| RC 620 | W | HDA-96-1 | K22-HDA | D22-HDA | 49-853 | 49-852 |
| TR 200 | W | WYL-123-1 | K20-WYL | D11-WYL | | |
| XC 13 | W | WT-481-1 | K20-WAT | D10-WAT | 49-831 | 49-812 |
| XD7 | W | WYA-44-1 | K20-WYA | D20-WYA | | |
| XE 14 | W | WY-33-1 | K10-WY | D10-WY | 49-875 | 49-839 |
| XE 32 | W | WYL-157-1 | K20-WYL | D11-WYL | | |
| XE41 | W | WT-729-1 | K20-WAT | D20-WAT | 49-831 | 49-844 |
| **Lawn Boy** | | | | | | |
| 61620 | Z | C1U-P10 | RB-29 | GND-18 | 49-285 | |
| 61638 | Z | C1U-P10 | RB-29 | GND-18 | 49-285 | |
| 61653 | Z | C1U-P11 | RB-29 | GND-18 | 49-285 | |
| 61653 | Z | C1U-P11 | RB-29 | GND-18 | 49-285 | |
| F-SERIES | W | LMR-13-1 | K11-LMR | | | |
| F-SERIES | W | LMR-11-1 | K11-LMR | | | |
| F-SERIES | W | LMR-1-1 | K11-LMR | | | |
| F-SERIES | W | LMR-10-1 | K11-LMR | | | |
| F-SERIES | W | LMR-12-1 | K11-LMR | | | |
| F-SERIES | W | LMR-14-1 | K11-LMR | | | |
| F-SERIES | W | LMR-15-1 | K11-LMR | | | |
| F-SERIES | W | LMR-2-1 | K11-LMR | | | |
| F-SERIES | W | LMR-3-1 | K11-LMR | | | |
| F-SERIES | W | LMR-4-1 | K11-LMR | | | |
| F-SERIES | W | LMR-9-1 | K11-LMR | | | |
| TC 21 TA | W | WT-14-1 | K20-WAT | D10-WAT | 49-831 | 49-812 |

CARB = Original OEM Carburetor

**B** = Bing
**N** = Nikki
**T** = Tillotson
**TK** = Teiki
**W** = Walbro
**Z** = Zama

*** No model information available

C

# Carburetor Kit Application Chart

| OEM ENGINE/UNIT | | WALBRO CARBURETOR | | | OREGON | |
|---|---|---|---|---|---|---|
| Model | Carb | № | Kit | Gaskets | Kit | Gaskets |
| **Lesco** | | | | | | |
| H.T./EDGER/S.T./B.C. | Z | C1U-SK12 | RB-26 | GND-17 | 49-284 | 49-880 |
| LBB4200 | Z | C1M-K24 | RB-44 | GND-31 | 49-903 | |
| LBH2500 | Z | C1U-SK13 | RB-26 | GND-17 | 49-284 | 49-880 |
| LHB2 | Z | C1U-K26 | RB-52 | GND-18 | | |
| LHD1700 | Z | C1U-K27 | RB-23 | GND-12 | 49-283 | 49-851 |
| LHE2475 | Z | C1U-K23A-B | RB-27 | GND-17 | 49-897 | 49-880 |
| LHS3050 | Z | C1U-K31 | RB-26 | GND-17 | 49-284 | 49-880 |
| LHS4050 | Z | C1U-K31 | RB-26 | GND-17 | 49-284 | 49-880 |
| LST2100 | Z | C1U-K16 | RB-21 | GND-18 | 49-822-0 | |
| LST24S01 | Z | C1U-K23 | RB-27 | GND-17 | 49-897 | 49-880 |
| S.T./B.C. | Z | C1Q-SK9 | RB-68 | GND-17 | | 49-880 |
| **Lombard Chainsaw** | | | | | | |
| Unspecified | W | SDC-40-1 | K10-SDC | D10-SDC | 49-834 | 49-810 |
| Unspecified | W | SDC-41-1 | K10-SDC | D10-SDC | 49-834 | 49-810 |
| **Makita (See Dolmar)** | | | | | | |
| **Maruyama** | | | | | | |
| 120 L | W | WYJ-93-1 | K20-WYJ | D20-WYJ | 49-882 | |
| AE 200 | W | WYK-9-1 | K20-WYK | D20-WYK | | |
| AE 200 | W | WYL-38-1 | K20-WYL | D11-WYL | | |
| AE 200 | W | WYJ-78-1 | K20-WYJ | D20-WYJ | 49-882 | |
| AE 230 | W | WYL-48-1 | K20-WYL | D11-WYL | | |
| AE 230 | W | WYJ-184-1 | K20-WYJ | D20-WYJ | 49-882 | |
| AE 230 | W | WYJ-182-1 | K20-WYJ | D20-WYJ | 49-882 | |
| AE 260 | W | WYJ-240-1 | K20-WYJ | D20-WYJ | 49-882 | |
| AE 260 | W | WYJ-70-1 | K20-WYJ | D20-WYJ | 49-882 | |
| AE 260 | W | WYJ-153-1 | K20-WYJ | D20-WYJ | 49-882 | |
| AE 260 | W | WYJ-170-1 | K20-WYJ | D20-WYJ | 49-882 | |
| AE 260 F | W | WYF-6-1 | K10-WYF | D10-WYF | | |
| AE 320 | W | WYJ-71-1 | K20-WYJ | D20-WYJ | 49-882 | |
| AE 320 | W | WYJ-154-1 | K20-WYJ | D20-WYJ | 49-882 | |
| AE 320 | W | WYJ-171-1 | K20-WYJ | D20-WYJ | 49-882 | |
| AE 320 | W | WYK-11-1 | K20-WYK | D20-WYK | | |
| AE 320 | W | WYJ-120-1 | K20-WYJ | D20-WYJ | 49-882 | |
| AE 320 | W | WYJ-235-1 | K20-WYJ | D20-WYJ | 49-882 | |
| AE 320 | W | WYK-115-1 | K21-WYK | D21-WYK | | |
| AE 320 | W | WYJ-286-1 | K20-WYJ | D20-WYJ | 49-882 | |
| AE 320 | W | WYJ-69-1 | K20-WYJ | D20-WYJ | 49-882 | |
| AE 320 | W | WYJ-129-1 | K20-WYJ | D20-WYJ | 49-882 | |
| AE 320 F | W | WYF-6-1 | K10-WYF | D10-WYF | | |
| AE 320F | W | WYF-9-1 | K10-WYF | D10-WYF | | |
| AE 420 | W | WYK-59-1 | K20-WYK | D20-WYK | | |
| AE 420 | W | WYJ-105-1 | K20-WYJ | D20-WYJ | 49-882 | |
| AE 420 | W | WYJ-72-1 | K20-WYJ | D20-WYJ | 49-882 | |
| AE 420 | W | WYJ-73-1 | K20-WYJ | D20-WYJ | 49-882 | |
| AE 420 | W | WYJ-75-1 | K20-WYJ | D20-WYJ | 49-882 | |
| AE 420 | W | WYK-114-1 | K20-WYK | D20-WYK | | |
| AE 49 | W | WYL-38-1 | K20-WYL | D11-WYL | | |
| AE 500 | W | WYK-114-1 | K20-WYK | D20-WYK | | |
| AE 69 | W | WYJ-120-1 | K20-WYJ | D20-WYJ | 49-882 | |
| AE 98 | W | WYJ-286-1 | K20-WYJ | D20-WYJ | 49-882 | |
| AE320T | W | WYE-2-1 | XXX | XXX | | |
| BC 260/H | W | WYK-10-1 | K20-WYK | D20-WYK | | |
| BC 320/H | W | WYK-10-1 | K20-WYK | D20-WYK | | |
| BC 420/H | W | WYJ-105-1 | K20-WYJ | D20-WYJ | 49-882 | |
| BC 420/H | W | WYK-31-1 | K20-WYK | D20-WYK | | |
| BE 01 | W | WYL-90-1 | K20-WYL | D11-WYL | | |
| BE 01 | W | WYJ-278-1 | K20-WYJ | D20-WYJ | 49-882 | |
| BE 13 | W | WYL-109-1 | K20-WYL | D11-WYL | | |
| BE 200 | W | WYL-145-1 | K20-WYL | D11-WYL | | |
| BE 201 | W | WYL-145-1 | K20-WYL | D11-WYL | | |
| BE 230 | W | WYL-90-1 | K20-WYL | D11-WYL | | |
| BE 230 | W | WYJ-238-1 | K20-WYJ | D20-WYJ | 49-882 | |
| BE 230 | W | WYL-109-1 | K20-WYL | D11-WYL | | |
| BE 230 D | W | WYK-108-1 | K21-WYK | D21-WYK | | |
| BE 230 EJ | W | WYK-110-1 | K21-WYK | D21-WYK | | |
| BE 230 P | W | WYJ-291-1 | K20-WYJ | D20-WYJ | 49-882 | |
| BE 230 P | W | WYJ-278-1 | K20-WYJ | D20-WYJ | 49-882 | |
| BE200P | W | WYL-213-1 | K20-WYL | D11-WYL | | |
| BE200P/01 | W | WYL-168-1 | K20-WYL | D11-WYL | | |
| BE230 | W | WYK-160-1 | K21-WYK | D21-WYK | | |
| BE230P | W | WYJ-291-1 | K20-WYJ | D20-WYJ | 49-882 | |
| BL-2600 | Z | C1U-SK13 | RB-26 | GND-17 | 49-284 | 49-880 |
| BL-2I2 | Z | C1U-M21 | RB-20 | GND-12 | 49-864 | 49-851 |
| CE 02 | W | WYL-154-1 | K20-WYL | D11-WYL | | |
| CE 02 | W | WYL-158-1 | K20-WYL | D11-WYL | | |

| OEM ENGINE/UNIT | | WALBRO CARBURETOR | | | OREGON | |
|---|---|---|---|---|---|---|
| Model | Carb | № | Kit | Gaskets | Kit | Gaskets |
| **Maruyama** | | | | | | |
| CE 230 | W | WYJ-274-1 | K20-WYJ | D20-WYJ | 49-882 | |
| CE 230 | W | WYL-154-1 | K20-WYL | D11-WYL | | |
| CE 230 | W | WYL-158-1 | K20-WYL | D11-WYL | | |
| CE 260 | W | WYJ-281-1 | K20-WYJ | D20-WYJ | 49-882 | |
| CE230 | W | WYJ-414-1 | K20-WYJ | D20-WYJ | 49-882 | |
| CE300 | W | WYJ-324-1 | K20-WYJ | D20-WYJ | 49-882 | |
| DE210 | W | WYK-222-1 | K21-WYK | D21-WYK | | |
| ED 260 | W | WYK-35-1 | K20-WYK | D20-WYK | | |
| EE200/06 | W | WYL-224-1 | K20-WYL | D11-WYL | | |
| EX 4-2 | W | WYK-31-1 | K20-WYK | D20-WYK | | |
| LE 01 | W | WYJ-135-1 | K20-WYJ | D20-WYJ | 49-882 | |
| LE 02 | W | WYJ-135-1 | K20-WYJ | D20-WYJ | 49-882 | |
| LE 11 | W | WYJ-134-1 | K20-WYJ | D20-WYJ | 49-882 | |
| LE 14 | W | WYL-34-1 | K20-WYL | D11-WYL | | |
| LE 230 | W | WYK-46-1 | K21-WYK | D21-WYK | | |
| LE 230 | W | WYL-29-1 | K20-WYL | D11-WYL | | |
| LE 230 | W | WYL-31-1 | K20-WYL | D11-WYL | | |
| LE 230 | W | WYL-35-1 | K20-WYL | D11-WYL | | |
| LE 230 | W | WYL-59-1 | K20-WYL | D11-WYL | | |
| LE 230 | W | WYL-119-1 | K20-WYL | D11-WYL | | |
| LE 230 | W | WYL-50-1 | K20-WYL | D11-WYL | | |
| LE 230 | W | WYL-28-1 | K20-WYL | D11-WYL | | |
| LE 230 | W | WYL-60-1 | K20-WYL | D11-WYL | | |
| LE 230 | W | WYL-43-1 | K20-WYL | D11-WYL | | |
| LE 230 | W | WYL-34-1 | K20-WYL | D11-WYL | | |
| LE 230 | W | WYL-143-1 | K20-WYL | D11-WYL | | |
| LE 230 | W | WYL-44-1 | K20-WYL | D11-WYL | | |
| LE 230 | W | WYL-61-1 | K20-WYL | D11-WYL | | |
| LE 230 | W | WYL-33-1 | K20-WYL | D11-WYL | | |
| LE 230 | W | WYJ-134-1 | K20-WYJ | D20-WYJ | 49-882 | |
| LE 260 | W | WYJ-145-1 | K20-WYJ | D20-WYJ | 49-882 | |
| LE 260 | W | WYJ-253-1 | K20-WYJ | D20-WYJ | 49-882 | |
| LE 260 | W | WYK-75-1 | K21-WYK | D21-WYK | | |
| LE 260 | W | WYJ-173-1 | K20-WYJ | D20-WYJ | 49-882 | |
| LE 260 | W | WYJ-135-1 | K20-WYJ | D20-WYJ | 49-882 | |
| LE 260D | W | WYK-151-1 | K21-WYK | D21-WYK | | |
| LE 260D | W | WYK-105-1 | K21-WYK | D21-WYK | | |
| LE 300 | W | WYJ-146-1 | K20-WYJ | D20-WYJ | 49-882 | |
| LE 300 | W | WYJ-137-1 | K20-WYJ | D20-WYJ | 49-882 | |
| LE 320 | W | WYK-92-1 | K21-WYK | D13-WYK | | |
| LE 320 | W | WYJ-198-1 | K20-WYJ | D20-WYJ | 49-882 | |
| LE 320D | W | WYK-109-1 | K21-WYK | D21-WYK | | |
| M 45 F | W | WYJ-75-1 | K20-WYJ | D20-WYJ | 49-882 | |
| MB 200 | W | WYJ-52-1 | K20-WYJ | D20-WYJ | 49-882 | |
| MB 2300 | W | WYJ-84-1 | K20-WYJ | D20-WYJ | 49-882 | |
| MB 260 | W | WYJ-53-1 | K20-WYJ | D20-WYJ | 49-882 | |
| MB 320 | W | WYJ-54-1 | K20-WYJ | D20-WYJ | 49-882 | |
| MBS 200 | W | WYK-9-1 | K20-WYK | D20-WYK | | |
| MBS 260 | W | WYK-10-1 | K20-WYK | D20-WYK | | |
| MBS 320 | W | WYK-11-1 | K20-WYK | D20-WYK | | |
| MKF 330 | W | WYJ-69-1 | K20-WYJ | D20-WYJ | 49-882 | |
| MS 056 | W | WYJ-68-1 | K20-WYJ | D20-WYJ | 49-882 | |
| MS059 | W | WYJ-415-1 | K20-WYJ | D20-WYJ | 49-882 | |
| NE420 | W | WYK-252-1 | K21-WYK | D21-WYK | | |
| **McCulloch** | | | | | | |
| 210 | W | SDC-18-1 | K10-SDC | D10-SDC | 49-834 | 49-810 |
| 380 | W | WT-55-1 | K10-WAT | D10-WAT | 49-816 | 49-812 |
| 510 | W | SDC-44-1 | K10-SDC | D10-SDC | 49-834 | 49-810 |
| 710 | W | SDC-18-1 | K10-SDC | D10-SDC | 49-834 | 49-810 |
| 730 | W | WT-113-1 | K10-WAT | D10-WAT | 49-816 | 49-812 |
| 735 | W | WT-130-1 | K10-WAT | D10-WAT | 49-816 | 49-812 |
| 39123 | W | SDC-2-1 | K10-SDC | D10-SDC | 49-834 | 49-810 |
| 39123 | W | SDC-3-1 | K10-SDC | D10-SDC | 49-834 | 49-810 |
| 39123 | W | SDC-3-1 | K10-SDC | D10-SDC | 49-834 | 49-810 |
| 39151 | W | SDC-2-1 | K10-SDC | D10-SDC | 49-834 | 49-810 |
| 39151 | W | SDC-3-1 | K10-SDC | D10-SDC | 49-834 | 49-810 |
| 39151 | W | SDC-3-1 | K10-SDC | D10-SDC | 49-834 | 49-810 |
| 39243 | W | SDC-2-1 | K10-SDC | D10-SDC | 49-834 | 49-810 |

CARB = Original OEM Carburetor

**B** = Bing
**N** = Nikki
**T** = Tillotson
**TK** = Teiki
**W** = Walbro
**Z** = Zama

*** No model information available

# Carburetor Kit Application Chart

| OEM ENGINE/UNIT | | WALBRO CARBURETOR | | | OREGON | |
|---|---|---|---|---|---|---|
| Model | Carb | № | Kit | Gaskets | Kit | Gaskets |
| **McCulloch** | | | | | | |
| 39243 | W | SDC-3-1 | K10-SDC | D10-SDC | 49-834 | 49-810 |
| 39243 | W | SDC-3-1 | K10-SDC | D10-SDC | 49-834 | 49-810 |
| 39273 | W | SDC-44-1 | K10-SDC | D10-SDC | 49-834 | 49-810 |
| 39365 | W | SDC-37-1 | K10-SDC | D10-SDC | 49-834 | 49-810 |
| 10-10 A | W | SDC-37-1 | K10-SDC | D10-SDC | 49-834 | 49-810 |
| 10-10 A | W | SDC-44-1 | K10-SDC | D10-SDC | 49-834 | 49-810 |
| 210 AV | W | SDC-18-1 | K10-SDC | D10-SDC | 49-834 | 49-810 |
| 25 cc | W | WT-566-1 | K20-WAT | D20-WAT | 49-831 | 49-844 |
| 28 cc | W | WT-231-1 | K10-WAT | D10-WAT | 49-816 | 49-812 |
| 28 cc | W | WT-312-1 | K10-WAT | D10-WAT | 49-816 | 49-812 |
| 28/32CC BLOWER | Z | C1U-M35 | RB-29 | GND-12 | 49-285 | 49-851 |
| 28/32CC trimmer | Z | C1U-M29 | RB-48 | GND-18 | | |
| 28/32CC trimmer | Z | C1U-M29 | RB-48 | GND-18 | | |
| 30 cc | W | WYJ-183-1 | K20-WYJ | D20-WYJ | 49-882 | |
| 32 cc | W | WT-231-1 | K10-WAT | D10-WAT | 49-816 | 49-812 |
| 32 cc | W | WT-312-1 | K10-WAT | D10-WAT | 49-816 | 49-812 |
| 32 cc | W | WT-258-1 | K10-WAT | D10-WAT | 49-816 | 49-812 |
| 32 cc | W | WT-347-1 | K10-WAT | D10-WAT | 49-816 | 49-812 |
| 32 cc | W | WT-437-1 | K10-WAT | D10-WAT | 49-816 | 49-812 |
| 32CCchainSAW | Z | C1Q-M27 | RB-39 | GND-35 | 49-902 | |
| 32CCchainSAW | Z | C1Q-M27 | RB-39 | GND-35 | 49-902 | |
| 32CCST/BC | Z | C1U-M37 | RB-48 | GND-18 | | |
| 35 cc | W | WYJ-183-1 | K20-WYJ | D20-WYJ | 49-882 | |
| 35 cc | W | WT-438-1 | K10-WAT | D10-WAT | 49-816 | 49-812 |
| 35 cc | W | WT-258-1 | K10-WAT | D10-WAT | 49-816 | 49-812 |
| 35 cc | W | WT-348-1 | K10-WAT | D10-WAT | 49-816 | 49-812 |
| 35CC chainSAW | Z | C1Q-M28 | RB-39 | GND-35 | 49-902 | |
| 35CC chainSAW | Z | C1Q-M28 | RB-39 | GND-35 | 49-902 | |
| 38 cc | W | WYJ-183-1 | K20-WYJ | D20-WYJ | 49-882 | |
| 38 cc | W | WT-349-1 | K10-WAT | D10-WAT | 49-816 | 49-812 |
| 38CC chainSAW | Z | C1Q-M36 | RB-39 | GND-35 | 49-902 | |
| 38CCchainSAW | Z | C1Q-M33 | RB-39 | GND-35 | 49-902 | |
| 38CCchainSAW | Z | C1Q-M33 | RB-39 | GND-35 | 49-902 | |
| 40 cc | W | WYJ-183-1 | K20-WYJ | D20-WYJ | 49-882 | |
| 5-10 A | W | SDC-2-1 | K10-SDC | D10-SDC | 49-834 | 49-810 |
| 5-10 A | W | SDC-3-1 | K10-SDC | D10-SDC | 49-834 | 49-810 |
| 5-10 A | W | SDC-3-1 | K10-SDC | D10-SDC | 49-834 | 49-810 |
| 610 AV | W | SDC-18-1 | K10-SDC | D10-SDC | 49-834 | 49-810 |
| 7-10 A | W | SDC-44-1 | K10-SDC | D10-SDC | 49-834 | 49-810 |
| 7-10 A | W | SDC-58-1 | K10-SDC | D10-SDC | 49-834 | 49-810 |
| BLOWER | Z | C1S-M13 | RB-10 | GND-32 | 49-862 | 49-858 |
| BLOWER/VAC | Z | C1S-M12 | RB-10 | GND-32 | 49-862 | 49-858 |
| CABRIO 35 & 38 | W | WT-694-1 | K20-WAT | D20-WAT | 49-831 | 49-844 |
| CP 55 | W | SDC-37-1 | K10-SDC | D10-SDC | 49-834 | 49-810 |
| CP 80 | W | SDC-38-1 | K10-SDC | D10-SDC | 49-834 | 49-810 |
| Double Eagle 50 | W | HDA-36-1 | K20-HDA | D10-HDA | 49-845 | |
| Double Eagle 50 | W | HDA-46-1 | K20-HDA | D10-HDA | 49-845 | |
| Double Eagle 50 | W | HDA-66-1 | K20-HDA | D10-HDA | 49-845 | |
| Double Eagle 80 | W | SDC-85-1 | K10-SDC | D10-SDC | 49-834 | 49-810 |
| FS55 | W | WT-758-1 | K10-WAT | D10-WAT | 49-816 | 49-812 |
| HEDGEtrimmer | Z | C1U-M32 | RB-29 | GND-12 | 49-285 | 49-851 |
| M 25 | W | WT-547-1 | K20-WAT | D10-WAT | 49-831 | 49-812 |
| M 25 | W | WT-547-1 | K20-WAT | D10-WAT | 49-831 | 49-812 |
| MAC 30 A | W | WT-102-1 | K10-WAT | D10-WAT | 49-816 | 49-812 |
| MAC 35 | W | WT-388-1 | K20-WAT | D10-WAT | 49-831 | 49-812 |
| MAC 35 | W | WT-414-1 | K20-WAT | D10-WAT | 49-831 | 49-812 |
| MAC 40 | W | WT-414-1 | K20-WAT | D10-WAT | 49-831 | 49-812 |
| MAC 40 | W | WT-388-1 | K20-WAT | D10-WAT | 49-831 | 49-812 |
| MAC 46 | W | WT-414-1 | K20-WAT | D10-WAT | 49-831 | 49-812 |
| MAC 46 | W | WT-388-1 | K20-WAT | D10-WAT | 49-831 | 49-812 |
| MAC 511 | W | WJ-11-1 | K11-WJ | D11-WJ | | |
| MAC 60 | Z | C1U-M16 | RB-28 | GND-18 | 49-866 | |
| MAC 60 | Z | C1U-M20 | RB-28 | GND-18 | 49-866 | |
| MAC 60 | W | WT-92-1 | K22-WAT | D22-WAT | | |
| MAC 60 | W | WA-146-1 | K10-WAT | D10-WAT | 49-816 | 49-812 |
| MAC 60 SX | W | WT-211-1 | K20-WAT | D20-WAT | 49-831 | 49-844 |
| MAC 60 X SX | W | WT-132-1 | K20-WAT | D20-WAT | 49-831 | 49-844 |
| MAC 60A | Z | C1S-M8 | RB-10 | GND-32 | 49-862 | 49-858 |
| MAC 611 | W | WJ-11-1 | K11-WJ | D11-WJ | | |
| MAC 65 | W | WT-210-1 | K10-WAT | D10-WAT | 49-816 | 49-812 |
| MAC 65 | W | WT-237-1 | K10-WAT | D10-WAT | 49-816 | 49-812 |
| MAC 65 | W | WT-238-1 | K20-WAT | D20-WAT | 49-831 | 49-844 |
| MAC 65 | W | WT-345-1 | K10-WAT | D10-WAT | 49-816 | 49-812 |
| MAC 65 | W | WT-346-1 | K20-WAT | D11-WAT | 49-831 | |
| MAC 65 | W | WT-354-1 | K20-WAT | D20-WAT | 49-831 | 49-844 |
| MAC 65 | W | WT-211-1 | K20-WAT | D20-WAT | 49-831 | 49-844 |
| MAC 65 | W | WT-436-1 | K20-WAT | D20-WAT | 49-831 | 49-844 |
| MAC 65 | W | WT-441-1 | K20-WAT | D10-WAT | 49-831 | 49-812 |
| MAC 710 | W | WJ-11-1 | K11-WJ | D11-WJ | | |
| MAC 80 | Z | C1U-M16 | RB-28 | GND-18 | 49-866 | |
| MAC 80 | Z | C1U-M20 | RB-28 | GND-18 | 49-866 | |
| MAC 80 | W | WA-146-1 | K10-WAT | D10-WAT | 49-816 | 49-812 |
| MAC 80A | Z | C1S-M8 | RB-10 | GND-32 | 49-862 | 49-858 |
| MAC 85 | W | WT-37-1 | K10-WAT | D10-WAT | 49-816 | 49-812 |
| MAC 85 | W | WT-91-1 | K22-WAT | D22-WAT | | |
| MAC 85 | W | WT-100-1 | K20-WAT | D20-WAT | 49-831 | 49-844 |
| MAC 950 | W | WJ-11-1 | K11-WJ | D11-WJ | | |
| MAC 960 | W | WJ-11-1 | K11-WJ | D11-WJ | | |
| MAC 970 | W | WJ-11-1 | K11-WJ | D11-WJ | | |
| MD 3000 | W | WT-255-1 | K10-WAT | D10-WAT | 49-816 | 49-812 |
| MD 3000 | W | WT-445-1 | K10-WAT | D10-WAT | 49-816 | 49-812 |
| MD 3800 | W | WT-445-1 | K10-WAT | D10-WAT | 49-816 | 49-812 |
| MD 3800 | W | WT-255-1 | K10-WAT | D10-WAT | 49-816 | 49-812 |
| MD 3800 | W | WT-255-1 | K10-WAT | D10-WAT | 49-816 | 49-812 |
| MD 4000 | W | WT-445-1 | K10-WAT | D10-WAT | 49-816 | 49-812 |
| MD 4600 | W | WYJ-208-1 | K20-WYJ | D20-WYJ | 49-882 | |
| MS 55 | W | WJ-82-1 | K10-WJ | D10-WJ | 49-873 | 49-843 |
| MS 60 | W | WJ-82-1 | K10-WJ | D10-WJ | 49-873 | 49-843 |
| PHT | W | WYL-176-1 | K20-WYL | D11-WYL | | |
| PM 370 | T | HU-57B | RK-14HU | DG-3HU | 49-805 | 49-804 |
| PM 490 | T | HU-58B | RK-14HU | DG-3HU | 49-805 | 49-804 |
| PM-300 | Z | C1-M2 | RB-1 | GND-1 | 49-861 | 49-854 |
| PM-510 | Z | C1-17-01 | RB-1 | GND-1 | 49-861 | 49-854 |
| PM-610 | Z | C1-17-02 | RB-1 | GND-1 | 49-861 | 49-854 |
| PM-800 | Z | C2-M3A | RB-15 | GND-8 | 49-836-0 | 49-860 |
| PM-800 | Z | C2S-19-01 | RB-18 | GND-10 | | |
| PM-850 | Z | C2-M3A | RB-15 | GND-8 | 49-836-0 | 49-860 |
| PM-850 | Z | C2S-19-01 | RB-18 | GND-10 | | |
| Power MAC 555 | W | SDC-44-1 | K10-SDC | D10-SDC | 49-834 | 49-810 |
| Power MAC 570 | W | SDC-38-1 | K10-SDC | D10-SDC | 49-834 | 49-810 |
| Power MAC 655 | W | HDB-7-1 | K10-HDB | D10-HDB | 49-832 | 49-806 |
| Power MAC 850 | W | SDC-38-1 | K10-SDC | D10-SDC | 49-834 | 49-810 |
| PRO 1010-A | W | SDC-65-1 | K10-SDC | D10-SDC | 49-834 | 49-810 |
| Pro MAC 10 10A | W | SDC-58-1 | K10-SDC | D10-SDC | 49-834 | 49-810 |
| Pro MAC 300 | W | WA-52-1 | K10-WAT | D10-WAT | 49-816 | 49-812 |
| Pro MAC 38 AV | W | WT-102-1 | K10-WAT | D10-WAT | 49-816 | 49-812 |
| Pro MAC 40 | W | WT-453-1 | K10-WAT | D10-WAT | 49-816 | 49-812 |
| Pro MAC 46 | W | WT-453-1 | K10-WAT | D10-WAT | 49-816 | 49-812 |
| Pro MAC 55 | W | SDC-49-1 | K10-WAT | D10-WAT | 49-816 | 49-812 |
| Pro MAC 55 | W | SDC-43-1 | K10-SDC | D10-SDC | 49-834 | 49-810 |
| Pro MAC 55 | W | SDC-58-1 | K10-SDC | D10-SDC | 49-834 | 49-810 |
| Pro MAC 60 | W | SDC-44-1 | K10-SDC | D10-SDC | 49-834 | 49-810 |
| Pro MAC 60 | W | SDC-49-1 | K10-WAT | D10-WAT | 49-816 | 49-812 |
| Pro MAC 60 | W | SDC-58-1 | K10-SDC | D10-SDC | 49-834 | 49-810 |
| Pro MAC 610 | W | HDB-1-1 | K10-HDB | D10-HDB | 49-832 | 49-806 |
| Pro MAC 610 | W | HDB-4-1 | K10-HDB | D10-HDB | 49-832 | 49-806 |
| Pro MAC 610 | W | HDB-6-1 | K10-HDB | D10-HDB | 49-832 | 49-806 |
| Pro MAC 650 | W | HDB-2-1 | K10-HDB | D10-HDB | 49-832 | 49-806 |
| PRO PUMP | Z | C1S-M9 | RB-10 | GND-32 | 49-862 | 49-858 |
| Quattro | W | WYJ-327-1 | K20-WYJ | D20-WYJ | 49-882 | |
| SP81 | Z | C2-M3A | RB-15 | GND-8 | 49-836-0 | 49-860 |
| SP81 | Z | C2S-19-01 | RB-18 | GND-10 | | |
| STRATO | W | WT-750-1 | K10-WAT | D10-WAT | 49-816 | 49-812 |
| Super 10-10 | W | SDC-16-1 | K10-SDC | D10-SDC | 49-834 | 49-810 |
| Super 710 | W | SDC-18-1 | K10-SDC | D10-SDC | 49-834 | 49-810 |
| Super Pro 60 | W | SDC-50-1 | K10-SDC | D10-SDC | 49-834 | 49-810 |
| Super Pro 60 | W | SDC-58-1 | K10-SDC | D10-SDC | 49-834 | 49-810 |
| Super Pro 70 | W | SDC-38-1 | K10-SDC | D10-SDC | 49-834 | 49-810 |
| Super Pro 81 | W | SDC-38-1 | K10-SDC | D10-SDC | 49-834 | 49-810 |
| Super Pro 81 | W | SDC-51-1 | K10-SDC | D10-SDC | 49-834 | 49-810 |
| Super Pro 81X | W | SDC-58-1 | K10-SDC | D10-SDC | 49-834 | 49-810 |
| Super XLAO | W | SDC-88-1 | K10-SDC | D10-SDC | 49-834 | 49-810 |
| Titan 50 | W | HDA-66-1 | K20-HDA | D10-HDA | 49-845 | |
| Titan 50 | W | HDA-77-1 | K20-HDA | D10-HDA | 49-845 | |
| Titan 51 | W | WJ-82-1 | K10-WJ | D10-WJ | 49-873 | 49-843 |
| Titan 51 | W | WJ-45-1 | K10-WJ | D10-WJ | 49-873 | 49-843 |
| Titan 55 | W | WJ-45-1 | K10-WJ | D10-WJ | 49-873 | 49-843 |
| Titan 55 | W | WJ-82-1 | K10-WJ | D10-WJ | 49-873 | 49-843 |
| Titan 57 cc | W | HDA-77-1 | K20-HDA | D10-HDA | 49-845 | |
| Titan 60 | W | WJ-45-1 | K10-WJ | D10-WJ | 49-873 | 49-843 |

CARB = Original OEM Carburetor

**B** = Bing
**N** = Nikki
**T** = Tillotson
**TK** = Teiki
**W** = Walbro
**Z** = Zama

*** No model information available

C

# Carburetor Kit Application Chart

| OEM ENGINE/UNIT | | WALBRO CARBURETOR | | | OREGON | |
|---|---|---|---|---|---|---|
| Model | Carb | № | Kit | Gaskets | Kit | Gaskets |
| **McCulloch** | | | | | | |
| Titan 60 | W | WJ-82-1 | K10-WJ | D10-WJ | 49-873 | 49-843 |
| Titan 70 | W | WJ-23-1 | K11-WJ | D11-WJ | | |
| Unspecified | W | WT-163-1 | K20-WAT | D20-WAT | 49-831 | 49-844 |
| Unspecified | W | WT-90-1 | K22-WAT | D22-WAT | | |
| Unspecified | W | WT-163-1 | K20-WAT | D20-WAT | 49-831 | 49-844 |
| Unspecified | W | SDC-89-1 | K10-SDC | D10-SDC | 49-834 | 49-810 |
| Unspecified | W | WT-288-1 | K10-WAT | D10-WAT | 49-816 | 49-812 |
| **McCulloch Italy / Husqvarna** | | | | | | |
| 730 | Z | C1Q-M24 | RB-38 | GND-27 | | 49-909 |
| 735 | Z | C1Q-M25 | RB-38 | GND-27 | | 49-909 |
| 740 | Z | C1Q-M26 | RB-38 | GND-27 | | 49-909 |
| 32 CC chain SAW | Z | C1Q-M27 | RB-39 | GND-35 | 49-902 | |
| 543 chain Saw | Z | C1Q-M43 | RB-45 | GND-33 | | 49-884 |
| C5010 chain Saw | Z | C1Q-M44 | RB-110 | GND-33 | | 49-884 |
| Cabrio 320 | Z | C1Q-M41 | RB-51 | GND-39 | | |
| Cabrio 380 | Z | C1Q-M41 | RB-51 | GND-39 | | |
| D25 | Z | C1U-M40 | RB-28 | GND-18 | 49-866 | |
| D25 | Z | C1U-M38 | RB-28 | GND-18 | 49-866 | |
| MC-4 | Z | C1Q-M31 | RB-51 | GND-39 | | |
| MC-5 | Z | C1Q-M31 | RB-51 | GND-39 | | |
| PRO MAC 40 | Z | C1Q-M39 | RB-38 | GND-27 | | 49-909 |
| PRO MAC 46 | Z | C1Q-M39 | RB-38 | GND-27 | | 49-909 |
| **Mitsubishi** | | | | | | |
| 110 PVD | W | WT-107-1 | K10-WAT | D10-WAT | 49-816 | 49-812 |
| NE 260 X | W | WYJ-163-1 | K20-WYJ | D20-WYJ | 49-882 | |
| NE 260 X | W | WYJ-163-1 | K20-WYJ | D20-WYJ | 49-882 | |
| T 100 | W | WY-55-1 | K10-WY | D10-WY | 49-875 | 49-839 |
| T 110 | W | WY-55-1 | K10-WY | D10-WY | 49-875 | 49-839 |
| T 140 | W | WY-50-1 | K10-WY | D10-WY | 49-875 | 49-839 |
| T 140 | W | WY-55-1 | K10-WY | D10-WY | 49-875 | 49-839 |
| T 140 PFD | W | WYK-3-1 | K20-WYK | D20-WYK | | |
| T 140 PFD | W | WYK-3-1 | K20-WYK | D20-WYK | | |
| T 200 | W | WYJ-2-1 | K20-WYJ | D20-WYJ | 49-882 | |
| T 200P D T9H | W | WYJ-37-1 | K20-WYJ | D20-WYJ | 49-882 | |
| T 320 BPB | W | WYJ-252-1 | K20-WYJ | D20-WYJ | 49-882 | |
| T 320 MVD | W | WYK-117-1 | K13-WYK | D13-WYK | | |
| T 320 PSD | W | WYK-118-1 | K13-WYK | D13-WYK | | |
| T 320 PSD-002 | W | WYJ-215-1 | K20-WYJ | D20-WYJ | 49-882 | |
| T 50 M | W | WA-74-1 | K10-WAT | D10-WAT | 49-816 | 49-812 |
| T 70 | W | WT-49-1 | K10-WAT | D10-WAT | 49-816 | 49-812 |
| T 70 | W | WT-53-1 | K10-WAT | D10-WAT | 49-816 | 49-812 |
| T-300 | W | WYJ-195-1 | K20-WYJ | D20-WYJ | 49-882 | |
| T320 | W | WYK-198-1 | K21-WYK | D21-WYK | | |
| T-320MVD | W | WYK-223-1 | K21-WYK | D21-WYK | | |
| T320PSD | W | WYJ-387-1 | K20-WYJ | D20-WYJ | 49-882 | |
| TB 33 | W | WPF-5-1 | K10-WPF | | | |
| TB20 | W | WYB-26-1 | K10-WYB | D10-WYB | | |
| TB20 | W | WYB-27-1 | K10-WYB | D10-WYB | | |
| TB20 | W | WYK-243-1 | K21-WYK | D21-WYK | | |
| TB23 | W | WYK-236-1 | K21-WYK | D21-WYK | | |
| TB23 | W | WYK-238-1 | K21-WYK | D21-WYK | | |
| TB23HS | W | WYK-237-1 | K21-WYK | D21-WYK | | |
| tb26 | W | WYK-249-1 | K21-WYK | D21-WYK | | |
| TF 24 PFD | W | WYK-13-1 | K21-WYK | D21-WYK | | |
| TL 20 PFD | W | WYK-34-1 | K21-WYK | D21-WYK | | |
| TL 20 PFD | W | WYJ-279-1 | K20-WYJ | D20-WYJ | 49-882 | |
| TL 20 PFD | W | WYJ-196-1 | K20-WYJ | D20-WYJ | 49-882 | |
| TL 20 PFD | W | WYJ-57-1 | K20-WYJ | D20-WYJ | 49-882 | |
| TL 20 PFD | W | WYJ-204-1 | K20-WYJ | D20-WYJ | 49-882 | |
| TL 20 PFD | W | WYK-102-1 | K21-WYK | D21-WYK | | |
| TL 20 PSD | W | WYJ-83-1 | K20-WYJ | D20-WYJ | 49-882 | |
| TL 20 PVD | W | WYJ-270-1 | K20-WYJ | D20-WYJ | 49-882 | |
| TL 20 PVD | W | WYJ-271-1 | K20-WYJ | D20-WYJ | 49-882 | |
| TL 20 PVD | W | WYJ-267-1 | K20-WYJ | D20-WYJ | 49-882 | |
| TL 20 PVD | W | WYJ-199-1 | K20-WYJ | D20-WYJ | 49-882 | |
| TL 20 PVD | W | WYJ-200-1 | K20-WYJ | D20-WYJ | 49-882 | |
| TL 20 PVD | W | WYJ-201-1 | K20-WYJ | D20-WYJ | 49-882 | |
| TL 20 PVD | W | WYJ-246-1 | K20-WYJ | D20-WYJ | 49-882 | |
| TL 20 PVD | W | WYJ-123-1 | K20-WYJ | D20-WYJ | 49-882 | |
| TL 20 PVD | W | WYJ-67-1 | K20-WYJ | D20-WYJ | 49-882 | |
| TL 201 | W | WYB-2-1 | K10-WYB | D10-WYB | | |
| TL 201 FD | W | WYL-153-1 | K20-WYL | D11-WYL | | |
| TL 23 PFD | W | WYK-30-1 | K21-WYK | D21-WYK | | |
| TL 23 PFD | W | WYJ-57-1 | K20-WYJ | D20-WYJ | 49-882 | |
| TL 23 PFD | W | WYJ-136-1 | K20-WYJ | D20-WYJ | 49-882 | |
| TL 23 PVD | W | WYJ-247-1 | K20-WYJ | D20-WYJ | 49-882 | |

| OEM ENGINE/UNIT | | WALBRO CARBURETOR | | | OREGON | |
|---|---|---|---|---|---|---|
| Model | Carb | № | Kit | Gaskets | Kit | Gaskets |
| **Mitsubishi** | | | | | | |
| TL 23 PVD | W | WYJ-150-1 | K20-WYJ | D20-WYJ | 49-882 | |
| TL 23 PVD | W | WYJ-191-1 | K20-WYJ | D20-WYJ | 49-882 | |
| TL 23 PVD | W | WYJ-269-1 | K20-WYJ | D20-WYJ | 49-882 | |
| TL 231 | W | WYB-1-1 | K10-WYB | D10-WYB | | |
| TL 231 | W | WYL-150-1 | K20-WYL | D11-WYL | | |
| TL 231 FD | W | WYK-136-1 | K21-WYK | D21-WYK | | |
| TL 26 MFD | W | WYK-56-1 | K21-WYK | D21-WYK | | |
| TL 26 PFD | W | WYK-54-1 | K21-WYK | D21-WYK | | |
| TL 26 PFD | W | WYK-21-1 | K21-WYK | D21-WYK | | |
| TL 26 PFD | W | WYJ-104-1 | K20-WYJ | D20-WYJ | 49-882 | |
| TL 26 PFD | W | WYK-47-1 | K21-WYK | D21-WYK | | |
| TL 26 PSD | W | WYK-50-1 | K21-WYK | D21-WYK | | |
| TL 26 PSD-409 | W | WYK-71-1 | K21-WYK | D21-WYK | | |
| TL 26 PVD | W | WYJ-98-1 | K20-WYJ | D20-WYJ | 49-882 | |
| TL 26 PVD | W | WYJ-139-1 | K20-WYJ | D20-WYJ | 49-882 | |
| TL 26 PVD | W | WYK-37-1 | K21-WYK | D21-WYK | | |
| TL 26 PVD | W | WYJ-79-1 | K20-WYJ | D20-WYJ | 49-882 | |
| TL 26 PVD | W | WYJ-66-1 | K20-WYJ | D20-WYJ | 49-882 | |
| TL 26 PVD | W | WYJ-245-1 | K20-WYJ | D20-WYJ | 49-882 | |
| TL 261 | W | WYK-154-1 | K21-WYK | D21-WYK | | |
| TL 261 FD | W | WYJ-293-1 | K20-WYJ | D20-WYJ | 49-882 | |
| TL 261 FD | W | WYK-137-1 | K21-WYK | D21-WYK | | |
| TL 33 PFD | W | WYJ-194-1 | K20-WYJ | D20-WYJ | 49-882 | |
| TL 33 PFD | W | WYK-32-1 | K21-WYK | D21-WYK | | |
| TL 33 PFD | W | WYK-48-1 | K21-WYK | D21-WYK | | |
| TL 33 PPD | W | WYJ-92-1 | K20-WYJ | D20-WYJ | 49-882 | |
| TL 33 PSD | W | WYK-43-1 | K21-WYK | D21-WYK | | |
| TL 33 PSD | W | WYK-51-1 | K21-WYK | D21-WYK | | |
| TL 33 PVD | W | WYJ-303-1 | K20-WYJ | D20-WYJ | 49-882 | |
| TL 33 PVD | W | WYJ-122-1 | K20-WYJ | D20-WYJ | 49-882 | |
| TL 43 | W | WYK-120-1 | K21-WYK | D21-WYK | | |
| TL 43 | W | WT-604-1 | K20-WAT | D10-WAT | 49-831 | 49-812 |
| TL 43 PFD | W | WYK-76-1 | K21-WYK | D21-WYK | | |
| TL 43 PFD | W | WYK-29-1 | K21-WYK | D21-WYK | | |
| TL 43 PFD | W | WYK-52-1 | K21-WYK | D21-WYK | | |
| TL 43 PSD | W | WYK-44-1 | K21-WYK | D21-WYK | | |
| TL 52 | W | WYK-121-1 | K13-WYK | D13-WYK | | |
| TL 52 PFD | W | WYK-53-1 | K21-WYK | D21-WYK | | |
| TL 52 PFD | W | WYK-149-1 | K21-WYK | D21-WYK | | |
| TL 52 PFD | W | WYK-28-1 | K21-WYK | D21-WYK | | |
| TL 52 PFD | W | WYK-113-1 | K21-WYK | D21-WYK | | |
| TL 52 PSD | W | WT-605-1 | K20-WAT | D10-WAT | 49-831 | 49-812 |
| TL201FD | W | WYB-20-1 | K10-WYB | D10-WYB | | |
| TL201VD | W | WYJ-337-1 | K20-WYJ | D20-WYJ | 49-882 | |
| TL201VD | W | WYJ-338-1 | K20-WYJ | D20-WYJ | 49-882 | |
| TL201VD | W | WYJ-339-1 | K20-WYJ | D20-WYJ | 49-882 | |
| TL201VD | W | WYJ-340-1 | K20-WYJ | D20-WYJ | 49-882 | |
| TL231 | W | WYK-197-1 | K21-WYK | D21-WYK | | |
| TL231FD | W | WYB-24-1 | K10-WYB | D10-WYB | | |
| TL23PVD | W | WYJ-405-1 | K20-WYJ | D20-WYJ | 49-882 | |
| TL261 | W | WYK-202-1 | K22-WYK | D22-WYK | | |
| TL261VD | W | WYJ-416-1 | K20-WYJ | D20-WYJ | 49-882 | |
| TL261VD | W | WYJ-406-1 | K20-WYJ | D20-WYJ | 49-882 | |
| TL261VD | W | WYJ-408-1 | K20-WYJ | D20-WYJ | 49-882 | |
| TL26PVD | W | WYK-187-1 | K21-WYK | D21-WYK | | |
| TL26PVD | W | WYJ-403-1 | K20-WYJ | D20-WYJ | 49-882 | |
| TL33 | W | WYJ-350-1 | K20-WYJ | D20-WYJ | 49-882 | |
| TL33PFD | W | WYJ-412-1 | K20-WYJ | D20-WYJ | 49-882 | |
| TL33PFD | W | WYK-194-1 | K22-WYK | D22-WYK | | |
| TL33PPD | W | WYJ-386-1 | K20-WYJ | D20-WYJ | 49-882 | |
| TL33PSD | W | WYK-204-1 | K21-WYK | D21-WYK | | |
| TL-43 | W | WYK-178-1 | K21-WYK | D21-WYK | | |
| TL43PFD | W | WYK-234-1 | K21-WYK | D21-WYK | | |
| TL43PSD | W | WYK-205-1 | K21-WYK | D21-WYK | | |
| TL50 | W | WT-730-1 | K20-WAT | D20-WAT | 49-831 | 49-844 |
| TL-50 | W | WYK-215-1 | K21-WYK | D21-WYK | | |
| TL52JPFD | W | WYK-196-1 | K22-WYK | D22-WYK | | |
| TL52PFD | W | WYK-235-1 | K21-WYK | D21-WYK | | |
| TLE 20 FD | W | WYA-20-1 | K20-WYA | D20-WYA | | |
| TLE 23 FD | W | WYA-14-1 | K20-WYA | D20-WYA | | |

CARB = Original OEM Carburetor

**B** = Bing
**N** = Nikki
**T** = Tillotson
**TK** = Teiki
**W** = Walbro
**Z** = Zama

*** No model information available

C

# Carburetor Kit Application Chart

| OEM ENGINE/UNIT | | WALBRO CARBURETOR | | | OREGON | |
|---|---|---|---|---|---|---|
| Model | Carb | № | Kit | Gaskets | Kit | Gaskets |
| **Mitsubishi** | | | | | | |
| TLE 26 FD | W | WYA-13-1 | K20-WYA | D20-WYA | | |
| TLE 33 FD | W | WYA-21-1 | K20-WYA | D20-WYA | | |
| TLE20VD | W | WYA-55-1 | K20-WYA | D20-WYA | | |
| TLE20VD | W | WYA-33-1 | K20-WYA | D20-WYA | | |
| TLE23FD | W | WYA-48-1 | K20-WYA | D20-WYA | | |
| TLE26FD | W | WYA-61-1 | K20-WYA | D20-WYA | | |
| TLE33FD | W | WYA-62-1 | K20-WYA | D20-WYA | | |
| TLE43FD | W | WYA-31-1 | K20-WYA | D20-WYA | | |
| TM 18 | W | WYJ-17-1 | K20-WYJ | D20-WYJ | 49-882 | |
| TM 18 | W | WYJ-40-1 | K20-WYJ | D20-WYJ | 49-882 | |
| TM 21 | W | WYJ-28-1 | K20-WYJ | D20-WYJ | 49-882 | |
| TM 21 | W | WYJ-38-1 | K20-WYJ | D20-WYJ | 49-882 | |
| TM 21 | W | WYJ-42-1 | K20-WYJ | D20-WYJ | 49-882 | |
| TM 21 | W | WYJ-7-1 | K20-WYJ | D20-WYJ | 49-882 | |
| TM 21 | W | WYJ-44-1 | K20-WYJ | D20-WYJ | 49-882 | |
| TM 24 | W | WYJ-28-1 | K20-WYJ | D20-WYJ | 49-882 | |
| TM 24 | W | WYJ-38-1 | K20-WYJ | D20-WYJ | 49-882 | |
| TM 24 | W | WYJ-42-1 | K20-WYJ | D20-WYJ | 49-882 | |
| TM 24 | W | WYJ-44-1 | K20-WYJ | D20-WYJ | 49-882 | |
| TM 24 | W | WYJ-7-1 | K20-WYJ | D20-WYJ | 49-882 | |
| TM 24 BFD | W | WYJ-19-1 | K20-WYJ | D20-WYJ | 49-882 | |
| TM 24 PSD | W | WYJ-13-1 | K20-WYJ | D20-WYJ | 49-882 | |
| TM 24 PSD 600A | W | WYJ-39-1 | K20-WYJ | D20-WYJ | 49-882 | |
| TM 24 PSE | W | WYK-17-1 | K22-WYK | D22-WYK | | |
| TM 33 | W | WYJ-21-1 | K20-WYJ | D20-WYJ | 49-882 | |
| TM 33 | W | WYJ-29-1 | K20-WYJ | D20-WYJ | 49-882 | |
| TM 33 | W | WYJ-41-1 | K20-WYJ | D20-WYJ | 49-882 | |
| TM 33 | W | WYJ-43-1 | K20-WYJ | D20-WYJ | 49-882 | |
| TM 33 PFD | W | WYK-15-1 | K21-WYK | D21-WYK | | |
| TM 600 A | W | WYJ-13-1 | K20-WYJ | D20-WYJ | 49-882 | |
| TO-85 | Z | C1U-D1 | RB-63 | GND-17 | | 49-880 |
| TO-85 | Z | C1U-D1 | RB-63 | GND-17 | | 49-880 |
| TU 26 | W | WYJ-297-1 | K20-WYJ | D20-WYJ | 49-882 | |
| TU26MPD | W | WYJ-385-1 | K20-WYJ | D20-WYJ | 49-882 | |
| **MTD (See Ryobi)** | | | | | | |
| **Norm Kel (Green Power)** | | | | | | |
| GP-21S | Z | C1U-M16 | RB-28 | GND-18 | 49-866 | |
| **Oleo Mac** | | | | | | |
| 350 | Z | C2-L1 | RB-15 | GND-8 | 49-836-0 | 49-860 |
| 730 | Z | C1Q-E7 | RB-76 | GND-41 | | |
| 730 | Z | C1Q-E10 | RB-76 | GND-41 | | |
| 735 | Z | C1Q-E10 | RB-76 | GND-41 | | |
| 740 | Z | C1Q-E7 | RB-76 | GND-41 | | |
| 740 | Z | C1Q-E10 | RB-76 | GND-41 | | |
| **Onan** | | | | | | |
| LMG Carburetor | W | LMG-221-1 | K1-LMEG | GI-LM | | |
| LMG Carburetor | W | LMG-225-1 | K1-LMEG | GI-LM | | |
| LMG Carburetor | W | LMG-187-1 | K2-LMEG | GI-LM | | |
| LMG Carburetor | W | LMG-188-1 | K1-LMEG | GI-LM | | |
| LMG Carburetor | W | LMG-189-1 | K1-LMEG | GI-LM | | |
| LMG Carburetor | W | LMG-191-1 | K1-LMEG | GI-LM | | |
| LMG Carburetor | W | LMG-208-1 | K1-LMEG | GI-LM | | |
| **O.P.E.M.** | | | | | | |
| K1 | W | WT-111-1 | K20-WAT | D10-WAT | 49-816 | 49-812 |
| K1 | W | WT-48-1 | K20-WAT | D10-WAT | 49-816 | 49-812 |
| K2 | W | WT-111-1 | K20-WAT | D10-WAT | 49-816 | 49-812 |
| K2 | W | WT-48-1 | K20-WAT | D10-WAT | 49-816 | 49-812 |
| 145 | T | HK-15E | | DG-1HK | | 49-800 |
| 155 | T | HK-15E | | DG-1HK | | 49-800 |
| 165 | T | HE-8A | | DG-1HK | | 49-800 |
| 165 | T | HK-38A | | DG-1HK | | 49-800 |

CARB = Original OEM Carburetor

**B** = Bing
**N** = Nikki
**T** = Tillotson
**TK** = Teiki
**W** = Walbro
**Z** = Zama

*** No model information available

| OEM ENGINE/UNIT | | WALBRO CARBURETOR | | | OREGON | |
|---|---|---|---|---|---|---|
| Model | Carb | № | Kit | Gaskets | Kit | Gaskets |
| **ParCar Golf Cart** | | | | | | |
| 7 HP | W | WHL-10-1 | K1-WHL | | | |
| 7 HP | W | WHL-9-1 | K1-WHL | | | |
| **Partner / Pioneer** | | | | | | |
| 400 | Z | C1Q-EL1 | RB-45 | GND-33 | 49-884 | 49-884 |
| 410 | Z | C1Q-EL1 | RB-45 | GND-33 | 49-884 | 49-884 |
| **Partner / Pioneer** | | | | | | |
| 450 | Z | C1Q-EL1 | RB-45 | GND-33 | 49-884 | 49-884 |
| 460 | Z | C1Q-EL1 | RB-45 | GND-33 | 49-884 | 49-884 |
| 490 | Z | C1Q-EL1 | RB-45 | GND-33 | 49-884 | 49-884 |
| 510 | Z | C1Q-EL1 | RB-45 | GND-33 | 49-884 | 49-884 |
| K1200 | T | HS-175D | RK-23HS | DG-5HS | 49-803 | 49-802 |
| K750 | Z | C3-EL29 | RB-133 | GND-73 | | |
| P25 | T | HU-15E | RK-14HU | DG-3HU | 49-805 | 49-804 |
| P28 | T | HU-15E | RK-14HU | DG-3HU | 49-805 | 49-804 |
| P40 | T | HS-147D | RK-23HS | DG-5HS | 49-803 | 49-802 |
| P41 | T | HS-147D | RK-23HS | DG-5HS | 49-803 | 49-802 |
| P41T | T | HS-214A | RK-23HS | DG-5HS | 49-803 | 49-802 |
| P60 | T | HS-211A | RK-23HS | DG-5HS | 49-803 | 49-802 |
| P61 | T | HS-213A | RK-23HS | DG-5HS | 49-803 | 49-802 |
| P70 | T | HS-172B | RK-23HS | DG-5HS | 49-803 | 49-802 |
| P85 | T | HS-172B | RK-23HS | DG-5HS | 49-803 | 49-802 |
| **Poulan** | | | | | | |
| 201 | T | HS-59A | RK-23HS | DG-5HS | 49-803 | 49-802 |
| 223 | T | HS-59A | RK-23HS | DG-5HS | 49-803 | 49-802 |
| 245 | T | HS-59B | RK-23HS | DG-5HS | 49-803 | 49-802 |
| 360 | T | HS-59A | RK-23HS | DG-5HS | 49-803 | 49-802 |
| 361 | T | HS-198A | RK-23HS | DG-5HS | 49-803 | 49-802 |
| 400 | T | HS-59A | RK-23HS | DG-5HS | 49-803 | 49-802 |
| 405 | W | WJ-38-1 | K10-WJ | D10-WJ | 49-873 | 49-843 |
| 450 | T | HS-59A | RK-23HS | DG-5HS | 49-803 | 49-802 |
| 451 | T | HS-59A | RK-23HS | DG-5HS | 49-803 | 49-802 |
| 455 | W | WJ-38-1 | K10-WJ | D10-WJ | 49-873 | 49-843 |
| 525 | W | WJ-38-1 | K10-WJ | D10-WJ | 49-873 | 49-843 |
| 655 | W | WJ-38-1 | K10-WJ | D10-WJ | 49-873 | 49-843 |
| 1400 | W | WA-198-1 | K20-WAT | D20-WAT | 49-831 | 49-844 |
| 3400 | W | HDB-19-1 | K10-HDB | D10-HDB | 49-832 | 49-806 |
| 4000 | W | HDB-19-1 | K10-HDB | D10-HDB | 49-832 | 49-806 |
| 4200 | T | HS-168A | RK-23HS | DG-5HS | 49-803 | 49-802 |
| 5200 | T | HS-176A | RK-23HS | DG-5HS | 49-803 | 49-802 |
| PATRIOT 1900 SAW | Z | C1Q-W8 | RB-72 | GND-27 | | 49-909 |
| 1400 Series | W | WT-63-1 | K10-WAT | D10-WAT | 49-816 | 49-812 |
| 18 cc | W | WT-379-1 | K10-WAT | D10-WAT | 49-816 | 49-812 |
| 18 cc | W | WT-307-1 | K10-WAT | D10-WAT | 49-816 | 49-812 |
| 18 cc | W | WT-221-1 | K20-WAT | D10-WAT | 49-831 | 49-812 |
| 18 cc | W | WT-267-1 | K10-WAT | D10-WAT | 49-816 | 49-812 |
| 2.0 C.I.D. | W | WT-310-1 | K10-WAT | D10-WAT | 49-816 | 49-812 |
| 2.0 C.I.D. | W | WT-309-1 | K10-WAT | D10-WAT | 49-816 | 49-812 |
| 2.3 C.I.D. | W | WT-309-1 | K10-WAT | D10-WAT | 49-816 | 49-812 |
| 2.8 cu. | W | HDA-49-1 | K20-HDA | D10-HDA | 49-845 | |
| 20 cc | W | WT-501-1 | K20-WAT | D10-WAT | 49-831 | 49-812 |
| 20 cc | W | WT-557-1 | K20-WAT | D20-WAT | 49-831 | 49-844 |
| 21 cc | W | WT-308-1 | K20-WAT | D20-WAT | 49-831 | 49-844 |
| 21cc | W | WT-630-1 | K24-WAT | D22-WAT | | |
| 21cc | W | WT-626-1 | K24-WAT | D22-WAT | | |
| 24 cc | W | WA-228-1 | K23-WAT | D23-WAT | | |
| 24 cc | W | WA-229-1 | K20-WAT | D20-WAT | 49-831 | 49-844 |
| 24 cc | W | WT-624-1 | K20-WAT | D20-WAT | 49-831 | 49-844 |
| 24 cc | W | WT-558-1 | K20-WAT | D20-WAT | 49-831 | 49-844 |
| 24cc | W | WT-784-1 | K20-WAT | D20-WAT | 49-831 | 49-844 |
| 25 CC LE Clutch | Z | C1U-W16 | RB-47 | GND-18 | | |
| 25 CC LE Clutch | Z | C1U-W16 | RB-47 | GND-18 | | |
| 25 CC SIMPLE START® | Z | C1U-W17 | RB-111 | GND-49 | | |
| 25cc | W | WT-631-1 | K24-WAT | D22-WAT | | |
| 25cc | W | WT-670-1 | K24-WAT | D22-WAT | | |
| 25cc | W | WT-669-1 | K24-WAT | D22-WAT | | |
| 25cc | W | WT-638-1 | K20-WAT | D20-WAT | 49-831 | 49-844 |
| 28cc Brushcutter | Z | C1Q-W36 | RB-47 | GND-18 | | |
| 28cc trimmer | Z | C1Q-W31 | RB-47 | GND-18 | | |
| 28cc trimmer | Z | C1Q-W34 | RB-47 | GND-18 | | |
| 28cc trimmer | Z | C1Q-W35 | RB-47 | GND-18 | | |
| 3.0 cu. | W | HDA-49-1 | K20-HDA | D10-HDA | 49-845 | |
| 3.3 cu. | W | HDA-49-1 | K20-HDA | D10-HDA | 49-845 | |
| 3.4 cu. | W | HDB-18-1 | K10-HDB | D10-HDB | 49-832 | 49-806 |
| 32 cc | W | WT-709-1 | K26-WAT | D26-WAT | | |

C

# Carburetor Kit Application Chart

| OEM ENGINE/UNIT | | WALBRO CARBURETOR | | | OREGON | |
|---|---|---|---|---|---|---|
| Model | Carb | № | Kit | Gaskets | Kit | Gaskets |
| **Poulan** | | | | | | |
| 32 cc | W | WT-579-1 | K20-WAT | D20-WAT | 49-831 | 49-844 |
| 32 cc | W | WT-618-1 | K10-WAT | D10-WAT | 49-816 | 49-812 |
| 32 cc | W | WT-619-1 | K10-WAT | D10-WAT | 49-816 | 49-812 |
| 32 cc (Home Depot) | W | WA-221-1 | K20-WAT | D20-WAT | 49-831 | 49-844 |
| 32cc | W | WT-628-1 | K20-WAT | D20-WAT | 49-831 | 49-844 |
| 36/42 LECS1 Non AVsaw | Z | C1Q-W14 | RB-41 | GND-27 | 49-898 | 49-909 |
| 42cc LE CSI | W | WT-637-1 | K20-WAT | D20-WAT | 49-831 | 49-844 |
| 50 cc | W | HDA-128-1 | K20-HDA | D10-HDA | 49-845 | |
| 54 cc | W | HDA-164-1 | K21-HDA | D10-HDA | | |
| 61 cc | W | HDA-137-1 | K20-HDA | D10-HDA | 49-845 | |
| 61cc | W | HDA-164-1 | K21-HDA | D10-HDA | | |
| Anti Vibe | W | WT-391-1 | K10-WAT | D10-WAT | 49-816 | 49-812 |
| Bricomarche CB21 FEATHERLITE | | Z | C1U-W7C-D | RB-73 | GND-18 | 49-908 |
| CS1 Airhead | Z | C1M-W26 | RB-129 | GND-70 | | |
| CS1 Hedgetrimmer | Z | C1U-W22 | RB-47 | GND-18 | | |
| CSI | W | WT-324-1 | K10-WAT | D10-WAT | 49-816 | 49-812 |
| CSI | W | WT-662-1 | K26-WAT | D26-WAT | | |
| CSI Anti Vibe | W | WT-518-1 | K10-WAT | D10-WAT | 49-816 | 49-812 |
| CSI ANTI-VIBE | W | WT-625-1 | K20-WAT | D20-WAT | 49-831 | 49-844 |
| EH122 | W | HDA-220-1 | K20-HDA | D11-HDA | 49-845 | |
| European version | W | WT-247-1 | K10-WAT | D10-WAT | 49-816 | 49-812 |
| Featherlite | W | WT-632-1 | K20-WAT | D20-WAT | 49-831 | 49-844 |
| G T I | W | WT-141-1 | K10-WAT | D10-WAT | 49-816 | 49-812 |
| G T I | W | WT-182-1 | K10-WAT | D10-WAT | 49-816 | 49-812 |
| GBI | W | WA-214-1 | K20-WAT | D20-WAT | 49-831 | 49-844 |
| GBI | W | WT-538-1 | K10-WAT | D10-WAT | 49-816 | 49-812 |
| GTI | W | WT-629-1 | K20-WAT | D20-WAT | 49-831 | 49-844 |
| GTI | W | WT-583-1 | K20-WAT | D20-WAT | 49-831 | 49-844 |
| GTI | W | WA-219-1 | K20-WAT | D20-WAT | 49-831 | 49-844 |
| GTI | W | WT-298-1 | K10-WAT | D10-WAT | 49-816 | 49-812 |
| GTI | W | WA-207-1 | K20-WAT | D20-WAT | 49-831 | 49-844 |
| GTI 32CC | W | WT-628-1 | K20-WAT | D20-WAT | 49-831 | 49-844 |
| GTI clutch | W | WT-300-1 | K10-WAT | D10-WAT | 49-816 | 49-812 |
| GTI non clutch | W | WA-217-1 | K20-WAT | D20-WAT | 49-831 | 49-844 |
| GTI non clutch | W | WA-219-1 | K20-WAT | D20-WAT | 49-831 | 49-844 |
| GTI non-clutch | W | WA-216-1 | K20-WAT | D20-WAT | 49-831 | 49-844 |
| GTI Wheeled Trimmer | W | WT-627-1 | K20-WAT | D20-WAT | 49-831 | 49-844 |
| LB 25 | W | WT-586-1 | K20-WAT | D20-WAT | 49-831 | 49-844 |
| LB 25 | W | WT-587-1 | K20-WAT | D20-WAT | 49-831 | 49-844 |
| LE 21 | W | WT-242-1 | K10-WAT | D10-WAT | 49-816 | 49-812 |
| LE 21 | W | WT-262-1 | K10-WAT | D10-WAT | 49-816 | 49-812 |
| LE 25 | W | WT-587-1 | K20-WAT | D20-WAT | 49-831 | 49-844 |
| LE 25cc Non-Clutch F'Lite | Z | C1U-W18 | RB-115 | GND-12 | | 49-851 |
| LE Non-Clutch trimmer | Z | C1U-W19 | RB-117 | GND-64 | | |
| LE Sears Non-Clutch trimmer | Z | C1U-W24 | RB-115 | GND-12 | | 49-851 |
| LE-CS1Non-AV/AV chain Saw | Z | C1Q-W20 | RB-41 | GND-27 | 49-898 | 49-909 |
| LT | W | WT-639-1 | K20-WAT | D20-WAT | 49-831 | 49-844 |
| LT 18 non clutch | W | WA-223-1 | K20-WAT | D20-WAT | 49-831 | 49-844 |
| LT 18 non clutch | W | WA-226-1 | K20-WAT | D20-WAT | 49-831 | 49-844 |
| LT 18 non clutch | W | WA-224-1 | K20-WAT | D20-WAT | 49-831 | 49-844 |
| LT 21 | W | WA-215-1 | K20-WAT | D20-WAT | 49-831 | 49-844 |
| LT 21 | W | WT-380-1 | K10-WAT | D10-WAT | 49-816 | 49-812 |
| LT 21 | W | WT-245-1 | K20-WAT | D10-WAT | 49-831 | 49-812 |
| LT 21 | W | WT-299-1 | K20-WAT | D10-WAT | 49-831 | 49-812 |
| LT 21 non clutch | W | WA-227-1 | K20-WAT | D20-WAT | 49-831 | 49-844 |
| LT 21 non clutch | W | WA-218-1 | K20-WAT | D20-WAT | 49-831 | 49-844 |
| LT non-clutch | W | WA-232-1 | K20-WAT | D20-WAT | 49-831 | 49-844 |
| LT Series | W | WT-592-1 | K24-WAT | D22-WAT | | |
| LT Series | W | WA-230-1 | K10-WAT | D10-WAT | 49-816 | 49-812 |
| LT Series non clutch | W | WA-225-1 | K23-WAT | D23-WAT | | |
| Micro | W | WT-20-1 | K10-WAT | D10-WAT | 49-816 | 49-812 |
| Micro 25 | T | HU-10C | RK-14HU | DG-3HU | 49-805 | 49-804 |
| Non-AV | W | WT-600-1 | K20-WAT | D10-WAT | 49-831 | 49-812 |
| O P P | W | WT-182-1 | K10-WAT | D10-WAT | 49-816 | 49-812 |
| OKAY T211 | Z | C1U-W7C-D | RB-73 | GND-18 | 49-908 | |
| P 42 T | W | WJ-21-1 | K10-WJ | D10-WJ | 49-873 | 49-843 |
| P 42 T | W | WJ-46-1 | K10-WJ | D10-WJ | 49-873 | 49-843 |
| P 52 T | W | WJ-21-1 | K10-WJ | D10-WJ | 49-873 | 49-843 |
| P 52 T | W | WJ-46-1 | K10-WJ | D10-WJ | 49-873 | 49-843 |
| P 600 | W | WT-540-1 | K20-WAT | D10-WAT | 49-831 | 49-812 |
| P 600 | W | WT-529-1 | K20-WAT | D10-WAT | 49-831 | 49-812 |
| P 600 | W | WT-542-1 | K20-WAT | D10-WAT | 49-831 | 49-812 |
| P 600 | W | WT-515-1 | K20-WAT | D10-WAT | 49-831 | 49-812 |
| P 600 | W | WT-239-1 | K20-WAT | D10-WAT | 49-831 | 49-812 |
| P 600 | W | WT-202-1 | K20-WAT | D10-WAT | 49-831 | 49-812 |
| P 600 | W | WT-285-1 | K10-WAT | D10-WAT | 49-816 | 49-812 |
| P 600 | W | WT-289-1 | K20-WAT | D10-WAT | 49-831 | 49-812 |
| P 600 | W | WT-350-1 | K20-WAT | D10-WAT | 49-831 | 49-812 |
| P 600 | W | WA-202-1 | K10-WAT | D10-WAT | 49-816 | 49-812 |
| P 600 LE | W | WT-610-1 | K20-WAT | D20-WAT | 49-831 | 49-844 |

| OEM ENGINE/UNIT | | WALBRO CARBURETOR | | | OREGON | |
|---|---|---|---|---|---|---|
| Model | Carb | № | Kit | Gaskets | Kit | Gaskets |
| **Poulan** | | | | | | |
| P 62 T | W | WJ-46-1 | K10-WJ | D10-WJ | 49-873 | 49-843 |
| P 62 T | W | WJ-21-1 | K10-WJ | D10-WJ | 49-873 | 49-843 |
| P 65T | W | WJ-49-1 | K10-WJ | D10-WJ | 49-873 | 49-843 |
| P600 | W | WT-660-1 | K20-WAT | D20-WAT | 49-831 | 49-844 |
| P-600 chain Saw | Z | C1Q-W29 | RB-38 | GND-27 | | 49-909 |
| Colibri SST, | Z | C1U-W7C-D | RB-73 | GND-18 | 49-908 | |
| POULAN 2250 | Z | C1Q-W9 | RB-72 | GND-27 | | 49-909 |
| POULAN 2250 | Z | C1Q-W9 | RB-72 | GND-27 | | 49-909 |
| POULAN PRO 2210 | Z | C1Q-W9 | RB-72 | GND-27 | | 49-909 |
| POULAN PRO 2600 | Z | C1Q-W9 | RB-72 | GND-27 | | 49-909 |
| POULAN PRO BVM 200LE | Z | C1Q-W11 | RB-47 | GND-18 | | |
| TE450CXL, | Z | C1U-W10 | RB-47 | GND-18 | | |
| Power Handle | W | WA-149-1 | K10-WAT | D10-WAT | 49-816 | 49-812 |
| Power Handle | W | WA-169-1 | K10-WAT | D10-WAT | 49-816 | 49-812 |
| Power Handle | W | WA-199-1 | K10-WAT | D10-WAT | 49-816 | 49-812 |
| Pro 475 | W | WJ-28-1 | K10-WJ | D10-WJ | 49-873 | 49-843 |
| R532 trimmer | Z | C1U-W32 | RB-142 | GND-78 | | |
| RS32 | W | WT-757-1 | K10-WAT | D10-WAT | 49-816 | 49-812 |
| SEARS 79533 | Z | C1U-W4 | RB-73 | GND-12 | 49-908 | 49-851 |
| SEARS 79566 | Z | C1U-W4 | RB-73 | GND-12 | 49-908 | 49-851 |
| SEARS 2.6 18" LE SAW, | Z | C1Q-W9 | RB-72 | GND-27 | | 49-909 |
| SEARS 51832 | Z | C1U-W4 | RB-73 | GND-12 | 49-908 | 49-851 |
| SEARS 79420 25cc | Z | C1U-W12 | RB-47 | GND-18 | | |
| SEARS 7943025 | Z | C1Q-W11 | RB-47 | GND-18 | | |
| SEARS 7943125, | Z | C1Q-W11 | RB-47 | GND-18 | | |
| SEARS 7943425, | Z | C1Q-W11 | RB-47 | GND-18 | | |
| SEARS 7945525 | Z | C1Q-W11 | RB-47 | GND-18 | | |
| SEARS 79539 | Z | C1U-W4 | RB-73 | GND-12 | 49-908 | 49-851 |
| SEARS 79564 | Z | C1U-W4 | RB-73 | GND-12 | 49-908 | 49-851 |
| SEARS 795690 | Z | C1U-W4 | RB-73 | GND-12 | 49-908 | 49-851 |
| SEARS 79570 | Z | C1U-W13 | RB-47 | GND-18 | | |
| SEARS 7963325 | Z | C1U-W13 | RB-47 | GND-18 | | |
| SEARS 79653 | Z | C1U-W4 | RB-73 | GND-12 | 49-908 | 49-851 |
| SEARS 7973025, | Z | C1Q-W11 | RB-47 | GND-18 | | |
| SEARS 7973425, | Z | C1Q-W11 | RB-47 | GND-18 | | |
| SEARS 7975525 | Z | C1Q-W11 | RB-47 | GND-18 | | |
| SEARS CAN 24cc, | Z | C1Q-W11 | RB-47 | GND-18 | | |
| SUPER 25 | Z | C1Q-W2 | RB-39 | GND-27 | 49-902 | 49-909 |
| Super 25 | W | WT-83-1 | K10-WAT | D10-WAT | 49-816 | 49-812 |
| TriMAC 210 GT | Z | C1U-W7C-D | RB-73 | GND-12 | 49-908 | 49-851 |
| Unspecified | W | WT-63-1 | K10-WAT | D10-WAT | 49-816 | 49-812 |
| WEEDEATER 180 Excalibur | Z | C1U-W4 | RB-73 | GND-12 | 49-908 | 49-851 |
| WEEDEATER 220 Excalibur | Z | C1U-W4 | RB-73 | GND-12 | 49-908 | 49-851 |
| WEEDEATER Aust WildThing, | Z | C1U-W7C-D | RB-73 | GND-12 | 49-908 | 49-851 |
| WEEDEATER BV1 800 LE | Z | C1Q-W11 | RB-47 | GND-18 | | |
| WEEDEATER BV1 850 LE | Z | C1Q-W11 | RB-47 | GND-18 | | |
| WEEDEATER BV1800, | Z | C1Q-W11 | RB-47 | GND-18 | | |
| WEEDEATER BV200 LB | Z | C1Q-W11 | RB-47 | GND-18 | | |
| WEEDEATER BV200 LE | Z | C1Q-W11 | RB-47 | GND-18 | | |
| WEEDEATER BV 2000 LE | Z | C1Q-W11 | RB-47 | GND-18 | | |
| WEEDEATER FEATHERLITE | Z | C1U-W7C-D | RB-73 | GND-12 | 49-908 | 49-851 |
| WEEDEATER FEATHERLITE | Z | C1U-W7C-D | RB-73 | GND-12 | 49-908 | 49-851 |
| WEEDEATER FEATHERLITE | Z | C1U-W10 | RB-47 | GND-18 | | |
| WEEDEATER GHT180 LE, | Z | C1U-W13 | RB-47 | GND-18 | | |
| WEEDEATER GHT220 | Z | C1U-W13 | RB-47 | GND-18 | | |
| WEEDEATER LF-1 500LE, | Z | C1U-W12 | RB-47 | GND-18 | | |
| WEEDEATER TE400LE, | Z | C1U-W10 | RB-47 | GND-18 | | |
| WEEDEATER XT200 FEATHERLITE | | Z | C1U-W7C-D | RB-73 | GND-12 | 49-908 |
| 49-851 | | | | | | |
| WOOD SHARK | Z | C1Q-W8 | RB-72 | GND-27 | | 49-909 |
| **Robin** | | | | | | |
| BF 22 | W | WYL-25-1 | K20-WYL | D11-WYL | | |
| BF 25 | W | WYL-25-1 | K20-WYL | D11-WYL | | |
| BN2750 | W | WYK-241-1 | K21-WYK | D21-WYK | | |
| BR 17 | W | WY-61-1 | K10-WY | D10-WY | 49-875 | 49-839 |
| BX 2 | W | WYK-25-1 | K21-WYK | D21-WYK | | |
| EC 01 | W | WZ-12-1 | K10-WZ | D10-WZ | 49-877 | 49-848 |
| EC 01 | W | WZ-13-1 | K10-WZ | D10-WZ | 49-877 | 49-848 |

CARB = Original OEM Carburetor

**B** = Bing
**N** = Nikki
**T** = Tillotson
**TK** = Teiki
**W** = Walbro
**Z** = Zama

*** No model information available

C

# Carburetor Kit Application Chart

| OEM ENGINE/UNIT | | WALBRO CARBURETOR | | | OREGON | |
|---|---|---|---|---|---|---|
| Model | Carb | № | Kit | Gaskets | Kit | Gaskets |
| **Robin** | | | | | | |
| EC 01 | W | WZ-5-1 | K10-WZ | D10-WZ | 49-877 | 49-848 |
| EC 01 A | W | WA-186-1 | K10-WAT | D10-WAT | 49-816 | 49-812 |
| EC 01 A | W | WZ-27-1 | K10-WZ | D10-WZ | 49-877 | 49-848 |
| EC 01 R | W | WY-35-1 | K10-WY | D10-WY | 49-875 | 49-839 |
| EC 01 R | W | WZ-31-1 | K10-WZ | D10-WZ | 49-877 | 49-848 |
| EC 01 R | W | WY-40-1 | K10-WY | D10-WY | 49-875 | 49-839 |
| EC 02 | W | WA-40-1 | K10-WAT | D10-WAT | 49-816 | 49-812 |
| EC 02 | W | WZ-10-1 | K10-WZ | D10-WZ | 49-877 | 49-848 |
| EC 02 | W | WZ-11-1 | K10-WZ | D10-WZ | 49-877 | 49-848 |
| EC 02 | W | WZ-21-1 | K10-WZ | D10-WZ | 49-877 | 49-848 |
| EC 02 | W | WY-36-1 | K10-WY | D10-WY | 49-875 | 49-839 |
| EC 02 | W | WZ-4-1 | K10-WZ | D10-WZ | 49-877 | 49-848 |
| EC 02 E | W | WY-19-1 | K10-WY | D10-WY | 49-875 | 49-839 |
| EC 02 E | W | WY-25-1 | K10-WY | D10-WY | 49-875 | 49-839 |
| EC 02 E | W | WZ-33-1 | K10-WZ | D10-WZ | 49-877 | 49-848 |
| EC 02 EF | W | WY-32-1 | K10-WY | D10-WY | 49-875 | 49-839 |
| EC 02 EH | W | WY-34-1 | K10-WY | D10-WY | 49-875 | 49-839 |
| EC 02 EHR | W | WY-58-1 | K10-WY | D10-WY | 49-875 | 49-839 |
| EC 02 EHR | W | WYJ-1-1 | K20-WYJ | D20-WYJ | 49-882 | |
| EC 02 EHR | W | WYJ-24-1 | K20-WYJ | D20-WYJ | 49-882 | |
| EC 02 EHR | W | WY-60-1 | K10-WY | D10-WY | 49-875 | 49-839 |
| EC 02 EHR | W | WYJ-4-1 | K20-WYJ | D20-WYJ | 49-882 | |
| EC 02 ER | W | WYL-12-1 | K20-WYL | D11-WYL | | |
| EC 02 ER | W | WY-10-1 | K10-WY | D10-WY | 49-875 | 49-839 |
| EC 02 ER | W | WY-26-1 | K10-WY | D10-WY | 49-875 | 49-839 |
| EC 02 ER | W | WY-29-1 | K10-WY | D10-WY | 49-875 | 49-839 |
| EC 02 ER | W | WY-37-1 | K10-WY | D10-WY | 49-875 | 49-839 |
| EC 02 ER | W | WY-38-1 | K10-WY | D10-WY | 49-875 | 49-839 |
| EC 02 ER (L) | W | WYP-5-1 | k20-WYMP | D20-WYMP | | |
| EC 02 F | W | WY-31-1 | K10-WY | D10-WY | 49-875 | 49-839 |
| EC 02 F | W | WZ-16-1 | K10-WZ | D10-WZ | 49-877 | 49-848 |
| EC 02 F | W | WZ-30-1 | K10-WZ | D10-WZ | 49-877 | 49-848 |
| EC 02 F | W | WY-30-1 | K10-WY | D10-WY | 49-875 | 49-839 |
| EC 02 GRV | W | WYL-72-1 | K20-WYL | D11-WYL | | |
| EC 02 R | W | WZ-43-1 | K10-WZ | D10-WZ | 49-877 | 49-848 |
| EC 02 R | W | WY-22-1 | K10-WY | D10-WY | 49-875 | 49-839 |
| EC 02 R | W | WY-27-1 | K10-WY | D10-WY | 49-875 | 49-839 |
| EC 020 G | W | WYL-156-1 | K20-WYL | D11-WYL | | |
| EC 020 G | W | WYL-163-1 | K20-WYL | D11-WYL | | |
| EC 020 G | W | WYL-103-1 | K20-WYL | D11-WYL | | |
| EC 020 G | W | WYL-91-1 | K20-WYL | D11-WYL | | |
| EC 020 G | W | WYL-92-1 | K20-WYL | D11-WYL | | |
| EC 020 G (NBF) | W | WYL-104-1 | K20-WYL | D11-WYL | | |
| EC 020 GRV | W | WYL-106-1 | K20-WYL | D11-WYL | | |
| EC 020 GRV | W | WYL-108-1 | K20-WYL | D11-WYL | | |
| EC 020 GRV | W | WYL-111-1 | K20-WYL | D11-WYL | | |
| EC 022 G | W | WYJ-151-1 | K20-WYJ | D20-WYJ | 49-882 | |
| EC 022 G | W | WYL-64-1 | K20-WYL | D11-WYL | | |
| EC 022 G | W | WYL-76-1 | K20-WYL | D11-WYL | | |
| EC 022 GA | W | WYJ-143-1 | K20-WYJ | D20-WYJ | 49-882 | |
| EC 022 GR | W | WYL-40-1 | K20-WYL | D11-WYL | | |
| EC 022 GR | W | WYL-41-1 | K20-WYL | D11-WYL | | |
| EC 022 GR | W | WYL-47-1 | K20-WYL | D11-WYL | | |
| EC 025 | W | WYL-37-1 | K20-WYL | D11-WYL | | |
| EC 025 | W | WYL-42-1 | K20-WYL | D11-WYL | | |
| EC 025 G | W | WYJ-211-1 | K20-WYJ | D20-WYJ | 49-882 | |
| EC 025 G | W | WYL-76-1 | K20-WYL | D11-WYL | | |
| EC 025 G | W | WYL-64-1 | K20-WYL | D11-WYL | | |
| EC 025 G | W | WYJ-151-1 | K20-WYJ | D20-WYJ | 49-882 | |
| EC 025 G | W | WYJ-239-1 | K20-WYJ | D20-WYJ | 49-882 | |
| EC 025 G | W | WYL-36-1 | K20-WYL | D11-WYL | | |
| EC 025 G | W | WYJ-179-1 | K20-WYJ | D20-WYJ | 49-882 | |
| EC 025 G | W | WYL-144-1 | K20-WYL | D11-WYL | | |
| EC 025 GA | W | WYJ-241-1 | K20-WYJ | D20-WYJ | 49-882 | |
| EC 025 GA | W | WYJ-143-1 | K20-WYJ | D20-WYJ | 49-882 | |
| EC 025 GF | W | WYL-147-1 | K20-WYL | D11-WYL | | |
| EC 025 GR | W | WYL-41-1 | K20-WYL | D11-WYL | | |
| EC 025 GR | W | WYL-40-1 | K20-WYL | D11-WYL | | |
| EC 025 GR | W | WYL-47-1 | K20-WYL | D11-WYL | | |
| EC 025 GRV | W | WYJ-265-1 | K20-WYJ | D10-WYJ | 49-882 | |
| EC 025G | W | WYJ-379-1 | K20-WYJ | D20-WYJ | 49-882 | |

CARB = Original OEM Carburetor

**B** = Bing
**N** = Nikki
**T** = Tillotson
**TK** = Teiki
**W** = Walbro
**Z** = Zama

*** No model information available

| OEM ENGINE/UNIT | | WALBRO CARBURETOR | | | OREGON | |
|---|---|---|---|---|---|---|
| Model | Carb | № | Kit | Gaskets | Kit | Gaskets |
| **Robin** | | | | | | |
| EC 028 | W | WYJ-155-1 | K20-WYJ | D20-WYJ | 49-882 | |
| EC 028 | W | WYK-72-1 | K21-WYK | D21-WYK | | |
| EC 028 GX | W | WYJ-155-1 | K20-WYJ | D20-WYJ | 49-882 | |
| EC 03 | W | WA-165-1 | K10-WAT | D10-WAT | 49-816 | 49-812 |
| EC 03 A | W | WZ-29-1 | K10-WZ | D10-WZ | 49-877 | 49-848 |
| EC 03 F | W | WY-30-1 | K10-WY | D10-WY | 49-875 | 49-839 |
| EC 03 FX | W | WZ-14-1 | K10-WZ | D10-WZ | 49-877 | 49-848 |
| EC 03 FX | W | WZ-16-1 | K10-WZ | D10-WZ | 49-877 | 49-848 |
| EC 030 | W | WYK-72-1 | K21-WYK | D21-WYK | | |
| EC 030 | W | WYJ-155-1 | K20-WYJ | D20-WYJ | 49-882 | |
| EC 030 GX | W | WYJ-155-1 | K20-WYJ | D20-WYJ | 49-882 | |
| EC 031 G | W | WYJ-295-1 | K20-WYJ | D20-WYJ | 49-882 | |
| EC 031 GA | W | WYJ-280-1 | K20-WYJ | D20-WYJ | 49-882 | |
| EC 04 E | W | WY-46-1 | K10-WY | D10-WY | 49-875 | 49-839 |
| EC 04 ER | W | WYJ-172-1 | K20-WYJ | D20-WYJ | 49-882 | |
| EC 04 ER | W | WYJ-165-1 | K20-WYJ | D20-WYJ | 49-882 | |
| EC 04 ER | W | WYK-66-1 | K21-WYK | D21-WYK | | |
| EC 04-0601 | W | WY-19-1 | K10-WY | D10-WY | 49-875 | 49-839 |
| EC 052 ER | W | WYK-112-1 | K21-WYK | D21-WYK | | |
| EC 052 ER | W | WYJ-35-1 | K20-WYJ | D20-WYJ | 49-882 | |
| EC 08 | W | HDA-176-1 | K20-HDA | D20-HDA | 49-845 | 49-835 |
| EC 08 D | W | WJ-95-1 | K14-WJ | D12-WJ | | |
| EC 08 D | W | WJ-80-1 | K14-WJ | D12-WJ | | |
| EC 08 D | W | WJ-47-1 | K10-WJ | D10-WJ | 49-873 | 49-843 |
| EC 08 D | W | WJ-56-1 | K11-WJ | D11-WJ | | |
| EC 08 D | W | WJ-57-1 | K11-WJ | D11-WJ | | |
| EC 08 GH | W | WJ-68-1 | K10-WJ | D10-WJ | 49-873 | 49-843 |
| EC 08 GHD | W | WJ-79-1 | K14-WJ | D12-WJ | | |
| EC 08 GHD | W | WJ-29-1 | K10-WJ | D10-WJ | 49-873 | 49-843 |
| EC 10 | W | SDC-83-1 | K10-SDC | D10-SDC | 49-834 | 49-810 |
| EC 10 | W | SDC-86-1 | K10-SDC | D10-SDC | 49-834 | 49-810 |
| EC020GRV | W | WYL-216-1 | K20-WYL | D11-WYL | | |
| EC025GRV | W | WYL-211-1 | K20-WYL | D11-WYL | | |
| EC02R | W | WZ-22-1 | K10-WZ | D10-WZ | 49-877 | 49-848 |
| EC025G | W | WYJ-366-1 | K20-WYJ | D20-WYJ | 49-882 | |
| EC025GA-2 | W | WYJ-322-1 | K20-WYJ | D20-WYJ | 49-882 | |
| EH 025 | W | WYL-137-1 | K20-WYL | D11-WYL | | |
| EH 025 | W | WYL-125-1 | K20-WYL | D11-WYL | | |
| EH 025 | W | WYL-116-1 | K20-WYL | D11-WYL | | |
| EH 025 | W | WYL-117-1 | K20-WYL | D11-WYL | | |
| EH 025 P | W | WYL-152-1 | K20-WYL | D11-WYL | | |
| EH035 | W | WYL-173-1 | K20-WYL | D11-WYL | | |
| EH035V | W | WYL-199-1 | K20-WYL | D11-WYL | | |
| EH075 | W | WYK-260-1 | K21-WYK | D21-WYK | | |
| EH092 | W | HDA-218-1 | K20-HDA | D20-HDA | 49-845 | 49-835 |
| FL 231 VX | W | WYJ-50-1 | K20-WYJ | D20-WYJ | 49-882 | |
| HC 02 ER | W | WYJ-31-1 | K20-WYJ | D20-WYJ | 49-882 | |
| HT 200 | W | WYJ-31-1 | K20-WYJ | D20-WYJ | 49-882 | |
| LH 311 | W | WYJ-32-1 | K20-WYJ | D20-WYJ | 49-882 | |
| LT 752 | W | WYJ-47-1 | K20-WYJ | D20-WYJ | 49-882 | |
| NB 211 | W | WZ-39-1 | K10-WZ | D10-WZ | 49-877 | 49-848 |
| NB 211 | W | WYJ-15-1 | K20-WYJ | D20-WYJ | 49-882 | |
| NB 221 | W | WYL-27-1 | K20-WYL | D11-WYL | | |
| NB 23 M | W | WY-17-1 | K10-WY | D10-WY | 49-875 | 49-839 |
| NB 231 | W | WYJ-15-1 | K20-WYJ | D20-WYJ | 49-882 | |
| NB 231 | W | WZ-39-1 | K10-WZ | D10-WZ | 49-877 | 49-848 |
| NB 251 | W | WYL-27-1 | K20-WYL | D11-WYL | | |
| NB 251 UL | W | WYJ-91-1 | K20-WYJ | D20-WYJ | 49-882 | |
| NB 26 | W | WYJ-16-1 | K20-WYJ | D20-WYJ | 49-882 | |
| NB 26 | W | WYJ-108-1 | K20-WYJ | D20-WYJ | 49-882 | |
| NB 263 | W | WYJ-62-1 | K20-WYJ | D20-WYJ | 49-882 | |
| NB 281 | W | WYJ-155-1 | K20-WYJ | D20-WYJ | 49-882 | |
| NB 31 | W | WYJ-108-1 | K20-WYJ | D20-WYJ | 49-882 | |
| NB 31 | W | WYJ-100-1 | K20-WYJ | D20-WYJ | 49-882 | |
| NB 31 | W | WYJ-16-1 | K20-WYJ | D20-WYJ | 49-882 | |
| NB 31 | W | WYK-65-1 | K21-WYK | D21-WYK | | |
| NB 320 | W | WYK-65-1 | K21-WYK | D21-WYK | | |
| NB 321 | W | WYK-65-1 | K21-WYK | D21-WYK | | |
| NB 411 | W | WYK-64-1 | K21-WYK | D21-WYK | | |
| NBA 211 | W | WZ-39-1 | K10-WZ | D10-WZ | 49-877 | 49-848 |
| NBA 231 | W | WYJ-15-1 | K20-WYJ | D20-WYJ | 49-882 | |
| NBA 231 | W | WZ-39-1 | K10-WZ | D10-WZ | 49-877 | 49-848 |
| NBF 17 | W | WY-61-1 | K10-WY | D10-WY | 49-875 | 49-839 |
| NBF 171 | W | WZ-38-1 | K10-WZ | D10-WZ | 49-877 | 49-848 |
| NBF 171 | W | WYJ-14-1 | K20-WYJ | D20-WYJ | 49-882 | |
| NBF 211 | W | WYJ-14-1 | K20-WYJ | D20-WYJ | 49-882 | |
| NBF 231 | W | WYJ-14-1 | K20-WYJ | D20-WYJ | 49-882 | |
| NBH 231 | W | WYJ-14-1 | K20-WYJ | D20-WYJ | 49-882 | |
| NBK 232 | W | WYJ-99-1 | K20-WYJ | D20-WYJ | 49-882 | |

C

# Carburetor Kit Application Chart

| OEM ENGINE/UNIT | | WALBRO CARBURETOR | | | OREGON | |
|---|---|---|---|---|---|---|
| Model | Carb | № | Kit | Gaskets | Kit | Gaskets |
| **Robin** | | | | | | |
| NBKA 231 | W | WYF-3-1 | K10-WYF | D10-WYF | | |
| NBKA 262 | W | WYJ-106-1 | K20-WYJ | D20-WYJ | 49-882 | |
| NBT 415 | W | WYJ-58-1 | K20-WYJ | D20-WYJ | 49-882 | |
| RBC 230 | W | WYJ-63-1 | K20-WYJ | D20-WYJ | 49-882 | |
| RBC 250 | W | WYL-24-1 | K20-WYL | D11-WYL | | |
| RBC 310 | W | WYJ-63-1 | K20-WYJ | D20-WYJ | 49-882 | |
| RSA 231 | W | WYF-2-1 | K10-WYF | D10-WYF | | |
| RST 250 | W | WYL-24-1 | K20-WYL | D11-WYL | | |
| YZ 80 | W | WB-33-1 | K12-WB | D12-WB | | |
| **Red Max (See Komatsu Zenoah)** | | | | | | |
| **Roper** | | | | | | |
| Anti Vibe | W | SDC-73-1 | K10-SDC | D10-SDC | 49-834 | 49-810 |
| **Ryobi** | | | | | | |
| 99 | W | WA-62-1 | K10-WAT | D10-WAT | 49-816 | 49-812 |
| 364 | Z | C1U-P7 | RB-29 | GND-18 | 49-285 | |
| 500 | Z | C1U-P6 | RB-29 | GND-18 | 49-285 | |
| 530 | Z | C1U-P7 | RB-29 | GND-18 | 49-285 | |
| 540 | Z | C1U-P10 | RB-29 | GND-18 | 49-285 | |
| 551 | W | WT-24-1 | K10-WAT | D10-WAT | 49-816 | 49-812 |
| 580 | Z | C1U-P10 | RB-29 | GND-18 | 49-285 | |
| 1300 | W | WA-62-1 | K10-WAT | D10-WAT | 49-816 | 49-812 |
| 1330 | W | WA-62-1 | K10-WAT | D10-WAT | 49-816 | 49-812 |
| 1360 | W | WA-62-1 | K10-WAT | D10-WAT | 49-816 | 49-812 |
| 5511 | W | WT-24-1 | K10-WAT | D10-WAT | 49-816 | 49-812 |
| 5511 | W | WT-5-1 | K10-WAT | D10-WAT | 49-816 | 49-812 |
| 280R | Z | C1U-P6 | RB-29 | GND-18 | 49-285 | |
| 310R | Z | C1U-P6 | RB-29 | GND-18 | 49-285 | |
| 310BVR | Z | C1U-P6 | RB-29 | GND-18 | 49-285 | |
| 410R | Z | C1U-P6 | RB-29 | GND-18 | 49-285 | |
| 700R | Z | C1U-P6 | RB-29 | GND-18 | 49-285 | |
| 700R | Z | C1U-P10 | RB-29 | GND-18 | 49-285 | |
| 704R | Z | C1U-P10 | RB-29 | GND-18 | 49-285 | |
| 705R | Z | C1U-P10 | RB-29 | GND-18 | 49-285 | |
| 710R | Z | C1U-P6 | RB-29 | GND-18 | 49-285 | |
| 725R | Z | C1U-P10 | RB-29 | GND-18 | 49-285 | |
| 740R | Z | C1U-P11 | RB-29 | GND-18 | 49-285 | |
| 750R | Z | C1U-P11 | RB-29 | GND-18 | 49-285 | |
| 752R | Z | C1U-P11 | RB-29 | GND-18 | 49-285 | |
| 760R | Z | C1U-P6 | RB-29 | GND-18 | 49-285 | |
| 765R | Z | C1U-P6 | RB-29 | GND-18 | 49-285 | |
| 780RB | Z | C1U-P7 | RB-29 | GND-18 | 49-285 | |
| 780RE | Z | C1U-P7 | RB-29 | GND-18 | 49-285 | |
| 790R | Z | C1U-P7 | RB-29 | GND-18 | 49-285 | |
| 975R | Z | C1Q-P8 | RB-75 | GND-47 | | |
| 990R | Z | C1Q-P8 | RB-75 | GND-47 | | |
| A-31 | Z | C1U-P14 | RB-29 | GND-18 | 49-285 | |
| AC | W | WT-311-1 | K10-WAT | D10-WAT | 49-816 | 49-812 |
| AC | W | WT-366-1 | K10-WAT | D10-WAT | 49-816 | 49-812 |
| AC 10 | W | WYL-88-1 | K20-WYL | D11-WYL | | |
| AC 2 | W | WYL-110-1 | K20-WYL | D11-WYL | | |
| AC 2 | W | WYL-196-1 | K20-WYL | D11-WYL | | |
| AC 2 | W | WYL-196-1 | K20-WYL | D11-WYL | | |
| AC 2 | W | WYL-124-1 | K20-WYL | D11-WYL | | |
| AC1 | Z | C1Q-P8 | RB-75 | GND-47 | | |
| AC-2.1 | W | WYL-187-1 | K20-WYL | D11-WYL | | |
| AC-2.1 | W | WYL-196-1 | K20-WYL | D11-WYL | | |
| AC-2.1 | W | WYL-196-1 | K20-WYL | D11-WYL | | |
| Cadet 3075 trimmer | Z | RB-P25 | RB-128 | GND-52 | | |
| Cub Cadet | W | WYL-204-1 | K20-WYL | D11-WYL | | |
| EK 2600 | W | WYJ-298-1 | K20-WYJ | D20-WYJ | 49-882 | |
| EKB 2600 L | W | WYJ-298-1 | K20-WYJ | D20-WYJ | 49-882 | |
| G 100 R | W | WA-42-1 | K10-WAT | D10-WAT | 49-816 | 49-812 |
| G 25 L | W | WYL-102-1 | K20-WYL | D11-WYL | | |
| G 25 L | W | WYL-107-1 | K20-WYL | D11-WYL | | |
| G22L | W | WYL-171-1 | K20-WYL | D11-WYL | | |
| G22L | W | WYL-185-1 | K20-WYL | D11-WYL | | |
| G25L | W | WYL-185-1 | K20-WYL | D11-WYL | | |
| GBC28 | Z | C1U-P7 | RB-29 | GND-18 | 49-285 | |
| GTS2816,GC31 | Z | C1U-P6 | RB-29 | GND-18 | 49-285 | |
| Hand Held | W | WTA-11-1 | | | | |
| Hand Held | W | WTA-7-1 | | | | |
| Hand Held | W | WTA-8-1 | | | | |
| JF2 | Z | RB-JF1 | RB-128 | GND-52 | | |
| LE EPA TRIMMER | Z | C1U-P17 | RB-98 | GND-18 | | |
| LE EPA TRIMMER | Z | C1U-P21 | RB-98 | GND-18 | | |

| OEM ENGINE/UNIT | | WALBRO CARBURETOR | | | OREGON | |
|---|---|---|---|---|---|---|
| Model | Carb | № | Kit | Gaskets | Kit | Gaskets |
| **Ryobi** | | | | | | |
| LE EPA TRIMMER | Z | C1U-P23 | RB-98 | GND-18 | | |
| LE EPA TWIST START® | Z | C1Q-P22 | RB-52 | GND-18 | | |
| LE TWIST START® | Z | C1Q-P18 | RB-52 | GND-18 | | |
| LIMIT CAP MODELS | Z | C1U-P10 | RB-29 | GND-18 | 49-285 | |
| LIMIT CAP MODELS | Z | C1U-P11 | RB-29 | GND-18 | 49-285 | |
| LIMIT CAP MODELS | Z | C1U-P11 | RB-29 | GND-18 | 49-285 | |
| LIMIT CAP MODELS | Z | C1U-P11 | RB-29 | GND-18 | 49-285 | |
| MULCHINATOR | Z | C1U-P12 | RB-29 | GND-18 | 49-285 | |
| N 28 | W | WT-457-1 | K10-WAT | D10-WAT | 49-816 | 49-812 |
| N 28 | W | WT-167-1 | K10-WAT | D10-WAT | 49-816 | 49-812 |
| N 28 | W | WT-266-1 | K10-WAT | D10-WAT | 49-816 | 49-812 |
| N 28 | W | WT-400-1 | K10-WAT | D10-WAT | 49-816 | 49-812 |
| N 28 | W | WT-166-1 | K10-WAT | D10-WAT | 49-816 | 49-812 |
| REK 285 BL | W | WT-187-1 | K10-WAT | D10-WAT | 49-816 | 49-812 |
| TC-432 | W | WYL-107-1 | K20-WYL | D11-WYL | | |
| TWIST START® trimmer | Z | C1Q-P24 | RB-52 | GND-18 | | |
| TWIST START® trimmer | Z | C1Q-P26 | RB-52 | GND-18 | | |
| Unspecified | W | WT-531-1 | K20-WAT | D20-WAT | 49-831 | 49-844 |
| Unspecified | W | WT-565-1 | K20-WAT | D20-WAT | 49-831 | 49-844 |
| Unspecified | W | WT-578-1 | K20-WAT | D20-WAT | 49-831 | 49-844 |
| Unspecified | W | WT-152-1 | K10-WAT | D10-WAT | 49-816 | 49-812 |
| Unspecified | W | WT-153-1 | K10-WAT | D10-WAT | 49-816 | 49-812 |
| Unspecified | W | WT-124-1 | K10-WAT | D10-WAT | 49-816 | 49-812 |
| Unspecified | W | WT-134-1 | K10-WAT | D10-WAT | 49-816 | 49-812 |
| Unspecified | W | WT-81-1 | K10-WAT | D10-WAT | 49-816 | 49-812 |
| Unspecified | W | WT-682-1 | K20-WAT | D20-WAT | 49-831 | 49-844 |
| Unspecified | W | WT-617-1 | K20-WAT | D20-WAT | 49-831 | 49-844 |
| Unspecified | W | WT-650-1 | K20-WAT | D20-WAT | 49-831 | 49-844 |
| Unspecified | W | WT-526-1 | K10-WAT | D10-WAT | 49-816 | 49-812 |
| Unspecified | W | WT-539-1 | K10-WAT | D10-WAT | 49-816 | 49-812 |
| Unspecified | W | WT-454-1 | K10-WAT | D10-WAT | 49-816 | 49-812 |
| Unspecified | W | WT-455-1 | K10-WAT | D10-WAT | 49-816 | 49-812 |
| Unspecified | W | WT-456-1 | K10-WAT | D10-WAT | 49-816 | 49-812 |
| Unspecified | W | WT-461-1 | K10-WAT | D10-WAT | 49-816 | 49-812 |
| Unspecified | W | WT-275-1 | K10-WAT | D10-WAT | 49-816 | 49-812 |
| Unspecified | W | WT-276-1 | K10-WAT | D10-WAT | 49-816 | 49-812 |
| Unspecified | W | WT-57-1 | K10-WAT | D10-WAT | 49-816 | 49-812 |
| Unspecified | W | WT-12-1 | K10-WAT | D10-WAT | 49-816 | 49-812 |
| Unspecified | W | WT-123-1 | K10-WAT | D10-WAT | 49-816 | 49-812 |
| Unspecified | W | WT-124-1 | K10-WAT | D10-WAT | 49-816 | 49-812 |
| Unspecified | W | WT-148-1 | K10-WAT | D10-WAT | 49-816 | 49-812 |
| Unspecified | W | WT-149-1 | K10-WAT | D10-WAT | 49-816 | 49-812 |
| Unspecified | W | WT-25-1 | K10-WAT | D10-WAT | 49-816 | 49-812 |
| Unspecified | W | WT-332-1 | K10-WAT | D10-WAT | 49-816 | 49-812 |
| Unspecified | W | WT-340-1 | K10-WAT | D10-WAT | 49-816 | 49-812 |
| Unspecified | W | WT-341-1 | K10-WAT | D10-WAT | 49-816 | 49-812 |
| Unspecified | W | WT-62-1 | K10-WAT | D10-WAT | 49-816 | 49-812 |
| Unspecified | W | WT-84-1 | K10-WAT | D10-WAT | 49-816 | 49-812 |
| Unspecified | W | WT-85-1 | K10-WAT | D10-WAT | 49-816 | 49-812 |
| Unspecified | W | WT-133-1 | K10-WAT | D10-WAT | 49-816 | 49-812 |
| Unspecified | W | WT-11-1 | K10-WAT | D10-WAT | 49-816 | 49-812 |
| Unspecified | W | WT-18-1 | K10-WAT | D10-WAT | 49-816 | 49-812 |
| Unspecified | W | WT-26-1 | K10-WAT | D10-WAT | 49-816 | 49-812 |
| Unspecified | W | WT-58-1 | K10-WAT | D10-WAT | 49-816 | 49-812 |
| Unspecified | W | WT-59-1 | K10-WAT | D10-WAT | 49-816 | 49-812 |
| Unspecified | W | WT-11-1 | K10-WAT | D10-WAT | 49-816 | 49-812 |
| **Sandri Garden** | | | | | | |
| CS45 | W | WT-692-1 | K20-WAT | D20-WAT | 49-831 | 49-844 |
| TS-60 | W | WYJ-355-1 | K20-WYJ | D20-WYJ | 49-882 | |
| **Servistar** | | | | | | |
| 365SSR | Z | C1U-P6 | RB-29 | GND-18 | 49-285 | |
| 375SSR | Z | C1U-P6 | RB-29 | GND-18 | 49-285 | |
| 365SSR | Z | C1U-P7 | RB-29 | GND-18 | 49-285 | |
| 375SSR | Z | C1U-P7 | RB-29 | GND-18 | 49-285 | |
| LIMIT CAP MODELS | Z | C1U-P10 | RB-29 | GND-18 | 49-285 | |
| LIMIT CAP MODELS | Z | C1U-P11 | RB-29 | GND-18 | 49-285 | |

CARB = Original OEM Carburetor

**B** = Bing
**N** = Nikki
**T** = Tillotson
**TK** = Teiki
**W** = Walbro
**Z** = Zama

*** No model information available

C

# Carburetor Kit Application Chart

| OEM ENGINE/UNIT | | WALBRO CARBURETOR | | | OREGON | |
|---|---|---|---|---|---|---|
| Model | Carb | № | Kit | Gaskets | Kit | Gaskets |
| **Servistar** | | | | | | |
| LIMIT CAP MODELS | Z | C1U-P11 | RB-29 | GND-18 | 49-285 | |
| **Shibaura** | | | | | | |
| M35D | Z | C1Q-SK8 | RB-68 | GND-17 | | 49-880 |
| M35D | Z | C1Q-SK9 | RB-68 | GND-17 | | 49-880 |
| M45D | Z | C1Q-SK10 | RB-68 | GND-17 | | 49-880 |
| M40D | Z | C1Q-SK10 | RB-68 | GND-17 | | 49-880 |
| M23D | Z | C1U-SK11 | RB-26 | GND-17 | 49-284 | 49-880 |
| M26D | Z | C1U-SK12 | RB-26 | GND-17 | 49-284 | 49-880 |
| M26D | Z | C1U-SK13 | RB-26 | GND-17 | 49-284 | 49-880 |
| M36D | Z | C1U-SK14 | RB-26 | GND-17 | 49-284 | 49-880 |
| M57D | Z | C1Q-SK15 | RB-68 | GND-17 | | 49-880 |
| KB45 | Z | C1Q-SK16 | RB-68 | GND-17 | | 49-880 |
| ME26D | Z | C1U-SK17 | RB-64 | GND-41 | 49-900 | |
| M23D | Z | RB-SK18 | RB-107 | GND-52 | | |
| **Shingu Shoko** | | | | | | |
| MAC-100HD | Z | C1U-M16 | RB-28 | GND-18 | 49-866 | |
| **Shindaiwa** | | | | | | |
| 350 | W | HDA-29-1 | K20-HDA | D10-HDA | 49-845 | |
| 405 | W | WA-101-1 | K10-WAT | D10-WAT | 49-816 | 49-812 |
| 406 | W | WA-101-1 | K10-WAT | D10-WAT | 49-816 | 49-812 |
| 415 | W | WA-101-1 | K10-WAT | D10-WAT | 49-816 | 49-812 |
| 416 | W | HDA-29-1 | K20-HDA | D10-HDA | 49-845 | |
| 285S/EC1 | W | WT-787-1 | K20-WAT | D20-WAT | 49-831 | 49-844 |
| 285S/EPA | W | WT-702-1 | K20-WAT | D10-WAT | 49-831 | 49-812 |
| 300 S | W | WYM-1-1 | K20-WYMP | D20-WYMP | | |
| 300 S | W | WYM-4-1 | K20-WYMP | D20-WYMP | | |
| 300S | W | WYM-4-1 | K20-WYMP | D20-WYMP | | |
| 352S/EPA | W | WT-701-1 | K20-WAT | D20-WAT | 49-831 | 49-844 |
| DH 220 | W | WYL-113-1 | K20-WYL | D11-WYL | | |
| E 300 | W | WYM-1-1 | K20-WYMP | D20-WYMP | | |
| E 304 D | W | WT-572-1 | K20-WAT | D20-WAT | 49-831 | 49-844 |
| E 305 AV | W | WA-44-1 | K10-WAT | D10-WAT | 49-816 | 49-812 |
| E 350 AV | W | WA-115-1 | K10-WAT | D10-WAT | 49-816 | 49-812 |
| E 352 | W | WT-303-1 | K20-WAT | D20-WAT | 49-831 | 49-844 |
| E 353 D | W | WT-571-1 | K20-WAT | D20-WAT | 49-831 | 49-844 |
| E 357 | W | WT-382-1 | K10-WAT | D10-WAT | 49-816 | 49-812 |
| E 357 | W | WT-301-1 | K10-WAT | D10-WAT | 49-816 | 49-812 |
| E 360 | W | WT-89-1 | K20-WAT | D10-WAT | 49-831 | 49-812 |
| E 360 | W | WT-384-1 | K20-WAT | D10-WAT | 49-831 | 49-812 |
| E 361 | W | WT-229-1 | K20-WAT | D10-WAT | 49-831 | 49-812 |
| E 377 | W | WT-384-1 | K20-WAT | D10-WAT | 49-831 | 49-812 |
| E 380 | W | WT-229-1 | K20-WAT | D10-WAT | 49-831 | 49-812 |
| E 381 | W | WT-336-1 | K20-WAT | D10-WAT | 49-831 | 49-812 |
| E 393 | W | WT-401-1 | K20-WAT | D10-WAT | 49-831 | 49-812 |
| E 393 | W | WT-508-1 | K20-WAT | D10-WAT | 49-831 | 49-812 |
| E 394 | W | WT-508-1 | K20-WAT | D10-WAT | 49-831 | 49-812 |
| E 400 | W | HDA-79-1 | K20-HDA | D10-HDA | 49-845 | |
| E 410 | W | WA-178-1 | K10-WAT | D10-WAT | 49-816 | 49-812 |
| E 415 AV | W | WA-84-1 | K10-WAT | D10-WAT | 49-816 | 49-812 |
| E 440 AV | W | WA-140-1 | K10-WAT | D10-WAT | 49-816 | 49-812 |
| E 445 | W | WA-178-1 | K10-WAT | D10-WAT | 49-816 | 49-812 |
| E 450 | W | WA-101-1 | K10-WAT | D10-WAT | 49-816 | 49-812 |
| E 480 AV | W | WA-140-1 | K10-WAT | D10-WAT | 49-816 | 49-812 |
| E 485 | W | WA-178-1 | K10-WAT | D10-WAT | 49-816 | 49-812 |
| E 488 | W | HDA-79-1 | K20-HDA | D10-HDA | 49-845 | |
| E 488 | W | HDA-165-1 | K22-HDA | D22-HDA | 49-853 | 49-852 |
| E 575 | W | HDA-50-1 | K20-HDA | D10-HDA | 49-845 | |
| E 577 | W | HDA-132-1 | K23-HDA | D20-HDA | | 49-835 |
| E 680 AV | W | HDA-29-1 | K20-HDA | D10-HDA | 49-845 | |
| E 757 | W | HDA-123-1 | K23HDA | D20-HDA | | 49-835 |
| E 757/EPA | W | HDA-181-1 | K24-HDA | D24-HDA | | |
| E1029S | W | WT-642-1 | K20-WAT | D20-WAT | 49-831 | 49-844 |
| E1036S | W | WT-641-1 | K20-WAT | D20-WAT | 49-831 | 49-844 |
| E1038S | W | WT-844-1 | K20-WAT | D20-WAT | 49-831 | 49-844 |
| E395D | W | WT-574-1 | K20-WAT | D20-WAT | 49-831 | 49-844 |

CARB = Original OEM Carburetor

**B** = Bing
**N** = Nikki
**T** = Tillotson
**TK** = Teiki
**W** = Walbro
**Z** = Zama

*** No model information available

| OEM ENGINE/UNIT | | WALBRO CARBURETOR | | | OREGON | |
|---|---|---|---|---|---|---|
| Model | Carb | № | Kit | Gaskets | Kit | Gaskets |
| **Shindaiwa** | | | | | | |
| EB 240 | W | WYJ-209-1 | K20-WYJ | D20-WYJ | 49-882 | |
| EB 240 | W | WYJ-162-1 | K20-WYJ | D20-WYJ | 49-882 | |
| EB 240 | W | WYJ-96-1 | K20-WYJ | D20-WYJ | 49-882 | |
| EB 45 | W | WT-40-1 | K10-WAT | D10-WAT | 49-816 | 49-812 |
| EB 460 | W | WYJ-141-1 | K20-WYJ | D20-WYJ | 49-882 | |
| EB 480 | W | WYJ-147-1 | K20-WYJ | D20-WYJ | 49-882 | |
| EB 501 | W | WYJ-285-1 | K20-WYJ | D20-WYJ | 49-882 | |
| EC 350 | W | HDA-29-1 | K20-HDA | D10-HDA | 49-845 | |
| EC 7500 | W | HDA-189-1 | K21-HDA | D20-HDA | | 49-835 |
| EC 757 | W | HDA-157-1 | K23-HDA | D20-HDA | | 49-835 |
| ECD 577 | W | HDA-140-1 | K21-HDA | D10-HDA | | |
| ES 300 S | W | WT-378-1 | K10-WAT | D10-WAT | 49-816 | 49-812 |
| F 18 | W | WYP-1-1 | K20-WYMP | D20-WYMP | | |
| F 20 | W | WA-135-1 | K10-WAT | D10-WAT | 49-816 | 49-812 |
| F 21 | W | WY-24-1 | K10-WY | D10-WY | 49-875 | 49-839 |
| HT 20 | W | WYJ-131-1 | K20-WYJ | D20-WYJ | 49-882 | |
| HT 234 | W | WYJ-176-1 | K20-WYJ | D20-WYJ | 49-882 | |
| K 35 | W | WYM-3-1 | K20-WYMP | D20-WYMP | | |
| R 20 L | W | WZ-6-1 | K10-WZ | D10-WZ | 49-877 | 49-848 |
| R 20 L | W | WZ-8-1 | K10-WZ | D10-WZ | 49-877 | 49-848 |
| R 220 | W | WYL-84-1 | K20-WYL | D11-WYL | | |
| R 23 | W | WZ-41-1 | K10-WZ | D10-WZ | 49-877 | 49-848 |
| R 2400 | W | WYK-133-1 | K21-WYK | D21-WYK | | |
| R 25 | W | WY-43-1 | K10-WY | D10-WY | 49-875 | 49-839 |
| RE 18 | W | WYP-1-1 | K20-WYMP | D20-WYMP | | |
| RE 20 | W | WA-135-1 | K10-WAT | D10-WAT | 49-816 | 49-812 |
| RE 21 | W | WY-24-1 | K10-WY | D10-WY | 49-875 | 49-839 |
| RK 231 S | W | WYJ-248-1 | K20-WYJ | D20-WYJ | 49-882 | |
| S 200 | W | WYL-58-1 | K20-WYL | D11-WYL | | |
| S 220 DX | W | WYL-58-1 | K20-WYL | D11-WYL | | |
| S 230 | W | WYL-26-1 | K20-WYL | D11-WYL | | |
| S 230 | W | WYL-19-1 | K20-WYL | D11-WYL | | |
| S 230 | W | WYL-126-1 | K20-WYL | D11-WYL | | |
| S 230 | W | WYL-122-1 | K20-WYL | D11-WYL | | |
| S 230 P | W | WYK-61-1 | K21-WYK | D21-WYK | | |
| S 232 | W | WYK-68-1 | K21-WYK | D21-WYK | | |
| S 234 | W | WYK-68-1 | K21-WYK | D21-WYK | | |
| S 25 H | W | WY-43-1 | K10-WY | D10-WY | 49-875 | 49-839 |
| S 25 M | W | WY-43-1 | K10-WY | D10-WY | 49-875 | 49-839 |
| SG 23 FS | W | WYF-1-1 | K10-WYF | D10-WYF | | |
| SHT230 | W | WYJ-176-1 | K20-WYJ | D20-WYJ | 49-882 | |
| SK 23 FS | W | WYF-1-1 | K10-WYF | D10-WYF | | |
| SK 231 | W | WYK-145-1 | K21-WYK | D21-WYK | | |
| SK 231 | W | WYJ-158-1 | K20-WYJ | D20-WYJ | 49-882 | |
| SK 231 | W | WYK-145-1 | K21-WYK | D21-WYK | | |
| SK 231S | W | WYK-145-1 | K21-WYK | D21-WYK | | |
| SK 231S | W | WYK-145-1 | K21-WYK | D21-WYK | | |
| SK 251 F | W | WYF-8-1 | K10-WYF | D10-WYF | | |
| SSE300S | W | WYM-5-1 | K20-WYMP | D20-WYMP | | |
| SSE360S | W | WYM-6-1 | K20-WYMP | D20-WYMP | | |
| T 18 | W | WYP-1-1 | K20-WYMP | D20-WYMP | | |
| T 20 | W | WZ-8-1 | K10-WZ | D10-WZ | 49-877 | 49-848 |
| T2500 | W | WYL-169-1 | K20-WYL | D11-WYL | | |
| T272 | W | WYJ-329-1 | K20-WYJ | D20-WYJ | 49-882 | |
| T3410 | W | WYL-208-1 | K20-WYL | D11-WYL | | |
| Unspecified | W | WT-238-1 | K20-WAT | D20-WAT | 49-831 | 49-844 |
| XS 200 | W | WYL-58-1 | K20-WYL | D11-WYL | | |
| XS 2400 | W | WYK-133-1 | K21-WYK | D21-WYK | | |
| XT 2500 | W | WYL-162-1 | K20-WYL | D11-WYL | | |
| **Singer (See Ryobi)** | | | | | | |
| **Snapper** | | | | | | |
| P212-CST | Z | C1S-M8 | RB-10 | GND-32 | 49-862 | 49-858 |
| P212-CST | Z | C1U-M20 | RB-28 | GND-18 | 49-866 | |
| P212 | Z | C1U-M16 | RB-28 | GND-18 | 49-866 | |
| P213 | Z | C1U-M16 | RB-28 | GND-18 | 49-866 | |
| P215 | Z | C1U-M16 | RB-28 | GND-18 | 49-866 | |
| **Solo** | | | | | | |
| 108 | W | HDA-147-1 | K12-HDA | D11-HDA | | |
| 108 | W | HDA-156-1 | K20-HDA | D10-HDA | 49-845 | |
| 127 | W | WT-365-1 | K20-WAT | D20-WAT | 49-831 | 49-844 |
| 130 | W | WT-365-1 | K20-WAT | D20-WAT | 49-831 | 49-844 |
| 134 | W | HDA-125-1 | K20-HDA | D10-HDA | 49-845 | |
| 140 | W | HDA-125-1 | K20-HDA | D10-HDA | 49-845 | |
| 414 | W | WYJ-128-1 | K20-WYJ | D20-WYJ | 49-882 | |

C

# Carburetor Kit Application Chart

| OEM ENGINE/UNIT | | WALBRO CARBURETOR | | | OREGON | |
|---|---|---|---|---|---|---|
| Model | Carb | № | Kit | Gaskets | Kit | Gaskets |
| **Solo** | | | | | | |
| 470 | W | WT-552-1 | K10-WAT | D10-WAT | 49-816 | 49-812 |
| 600 | W | HDC-52-1 | K10-HDC | D10-HDC | 49-833 | 49-807 |
| 603 | W | WJ-12-1 | K10-WJ | D10-WJ | 49-873 | 49-843 |
| 603 | W | WJ-19-1 | K10-WJ | D10-WJ | 49-873 | 49-843 |
| 603 | W | WJ-33-1 | K11-WJ | D11-WJ | | |
| 605 | W | HDC-52-1 | K10-HDC | D10-HDC | 49-833 | 49-807 |
| 606 | W | HDC-52-1 | K10-HDC | D10-HDC | 49-833 | 49-807 |
| 610 | T | HU-62A | RK-14HU | DG-3HU | 49-805 | 49-804 |
| 610 | W | WA-34-1 | K10-WAT | D10-WAT | 49-816 | 49-812 |
| 611 | W | WA-34-1 | K10-WAT | D10-WAT | 49-816 | 49-812 |
| 616 | W | HDC-50-1 | K10-HDC | D10-HDC | 49-833 | 49-807 |
| 631 | W | HDC-29-1 | K10-HDC | D10-HDC | 49-833 | 49-807 |
| 634 | W | HDA-111-1 | K20-HDA | D10-HDA | 49-845 | |
| 636 | W | WT-577-1 | K20-WAT | D20-WAT | 49-831 | 49-844 |
| 636 | W | WT-513-1 | K20-WAT | D10-WAT | 49-831 | 49-812 |
| 637 | W | WT-838-1 | K20-WAT | D20-WAT | 49-831 | 49-844 |
| 639 | W | HDA-170-1 | K22-HDA | D22-HDA | 49-853 | 49-852 |
| 639 | W | HDA-126-1 | K20-HDA | D10-HDA | 49-845 | |
| 639 | W | HDA-127-1 | K10-HDA | D10-HDA | | |
| 641 | W | HDA-111-1 | K20-HDA | D10-HDA | 49-845 | |
| 644 | Z | C3A-G1 | RB-30 | GND-20 | | |
| 644 | W | HDA-103-1 | K20-HDA | D10-HDA | 49-845 | |
| 644 | W | HDA-61-1 | K20-HDA | D10-HDA | 49-845 | |
| 644 | W | HDA-74-1 | K20-HDA | D10-HDA | 49-845 | |
| 645 | W | HDA-126-1 | K20-HDA | D10-HDA | 49-845 | |
| 645 | W | HDA-127-1 | K10-HDA | D10-HDA | | |
| 645 | W | HDA-170-1 | K22-HDA | D22-HDA | 49-853 | 49-852 |
| 647 | T | HU-63B | RK-14HU | DG-3HU | 49-805 | 49-804 |
| 647 | W | WT-108-1 | K20-WAT | D10-WAT | 49-831 | 49-812 |
| 647 | W | WT-42-1 | K20-WAT | D10-WAT | 49-831 | 49-812 |
| 650 | T | HS-110A | RK-23HS | DG-5HS | 49-803 | 49-802 |
| 651 | W | HDA-170-1 | K22-HDA | D22-HDA | 49-853 | 49-852 |
| 651 | W | HDA-127-1 | K10-HDA | D10-HDA | | |
| 654 | W | WT-108-1 | K20-WAT | D10-WAT | 49-831 | 49-812 |
| 654 | W | WT-42-1 | K20-WAT | D10-WAT | 49-831 | 49-812 |
| 660 | T | HS-110A | RK-23HS | DG-5HS | 49-803 | 49-802 |
| 662 | W | HDA-130-1 | K20-HDA | D10-HDA | 49-845 | |
| 662 | W | HDA-57-1 | K20-HDA | D10-HDA | 49-845 | |
| 662 | W | HDA-73-1 | K20-HDA | D10-HDA | 49-845 | |
| 662 | W | HDA-158-1 | K22-HDA | D22-HDA | 49-853 | 49-852 |
| 667 | W | HDA-158-1 | K22-HDA | D22-HDA | 49-853 | 49-852 |
| 667 | W | HDA-130-1 | K20-HDA | D10-HDA | 49-845 | |
| 667 | W | HDA-57-1 | K20-HDA | D10-HDA | 49-845 | |
| 667 | W | HDA-73-1 | K20-HDA | D10-HDA | 49-845 | |
| 670 | W | WJ-18-1 | K10-WJ | D10-WJ | 49-873 | 49-843 |
| 670 | W | WJ-32-1 | K11-WJ | D11-WJ | | |
| 680 | W | WJ-18-1 | K10-WJ | D10-WJ | 49-873 | 49-843 |
| 680 | W | WJ-32-1 | K11-WJ | D11-WJ | | |
| 680 | W | WJ-3-1 | K10-WJ | D10-WJ | 49-873 | 49-843 |
| 690 | W | WJ-19-1 | K10-WJ | D10-WJ | 49-873 | 49-843 |
| 690 | W | WJ-33-1 | K11-WJ | D11-WJ | | |
| 22 cc | W | WT-602-1 | K20-WAT | D20-WAT | 49-831 | 49-844 |
| 25 cc | W | WT-602-1 | K20-WAT | D20-WAT | 49-831 | 49-844 |
| 25 cc | W | WT-514-1 | K20-WAT | D20-WAT | 49-831 | 49-844 |
| 25 cc | W | WT-386-1 | K20-WAT | D11-WAT | 49-831 | |
| 440/441 | W | WT-663-1 | K20-WAT | D20-WAT | 49-831 | 49-844 |
| 600 Series | W | HDA-10-1 | K20-HDA | D10-HDA | 49-845 | |
| FS 126 | W | WT-218-1 | K20-WAT | D10-WAT | 49-831 | 49-812 |
| Multimot 100 | W | WA-98-1 | K10-WAT | D10-WAT | 49-816 | 49-812 |
| Multimot 100 | W | WT-106-1 | K10-WAT | D10-WAT | 49-816 | 49-812 |
| Multimot 100 | W | WT-64-1 | K10-WAT | D10-WAT | 49-816 | 49-812 |
| Multimot 101 | W | WT-205-1 | K10-WAT | D10-WAT | 49-816 | 49-812 |
| Unspecified | W | HDA-155-1 | K22-HDA | D22-HDA | 49-853 | 49-852 |
| **Stihl** | | | | | | |
| 8 | T | HL-166C | | DG-5HL | | 49-801 |
| 9 | Z | C1S-S1 | RB-11 | GND-7 | 49-863 | 49-859 |
| 9 | W | WA-99-1 | K10-WAT | D10-WAT | 49-816 | 49-812 |
| 10 | Z | C1S-S1 | RB-11 | GND-7 | 49-863 | 49-859 |
| 10 | W | WA-99-1 | K10-WAT | D10-WAT | 49-816 | 49-812 |
| 11 | Z | C1S-S1 | RB-11 | GND-7 | 49-863 | 49-859 |
| 11 | W | WA-99-1 | K10-WAT | D10-WAT | 49-816 | 49-812 |
| 12 | Z | C1S-S1 | RB-11 | GND-7 | 49-863 | 49-859 |
| 15 | W | HDC-17-1 | K10-HDC | D10-HDC | 49-833 | 49-807 |
| 17 | Z | C1Q-S43 | RB-77 | GND-33 | | 49-884 |
| 17 | Z | C1Q-S57 | RB-77 | GND-33 | | 49-884 |
| 18 | Z | C1Q-S43 | RB-77 | GND-33 | | 49-884 |
| 18 | Z | C1Q-S57 | RB-77 | GND-33 | | 49-884 |
| 20 | W | WA-86-1 | K10-WAT | D10-WAT | 49-816 | 49-812 |

| OEM ENGINE/UNIT | | WALBRO CARBURETOR | | | OREGON | |
|---|---|---|---|---|---|---|
| Model | Carb | № | Kit | Gaskets | Kit | Gaskets |
| **Stihl** | | | | | | |
| 21 | Z | C1Q-S11 | RB-97 | GND-35 | | |
| 23 | Z | C1Q-S11 | RB-97 | GND-35 | | |
| 24 | W | WT-195-1 | K10-WAT | D10-WAT | 49-816 | 49-812 |
| 25 | Z | C1Q-S11 | RB-97 | GND-35 | | |
| 26 | W | WT-394-318 | K20-WAT | D10-WAT | 49-831 | 49-812 |
| 26 | W | WT-22-1 | K10-WAT | D10-WAT | 49-816 | 49-812 |
| 26 | W | WT-581-1 | K26-WAT | D26-WAT | | |
| 26 | W | WT-395-1 | K20-WAT | D10-WAT | 49-831 | 49-812 |
| 32 | W | WA-49-1 | K10-WAT | D10-WAT | 49-816 | 49-812 |
| 34 | Z | C3A-S19 | RB-31 | GND-21 | 49-899 | 49-893 |
| 34 | Z | C3A-S31 | RB-31 | GND-21 | 49-899 | 49-893 |
| 34 | Z | C3A-S38 | RB-31 | GND-21 | 49-899 | 49-893 |
| 36 | Z | C3A-S52 | RB-31 | GND-21 | 49-899 | 49-893 |
| 38 | T | HK-42B | | DG-1HK | | 49-800 |
| 39 | W | HD-21-318 | K10-HD | D10-HD | 49-849 | 49-847 |
| 42 | W | WS-3-1 | K10-WS | D10-WS | | 49-814 |
| 42 | W | WS-13-1 | K10-WS | D10-WS | | 49-814 |
| 42 | W | WS-13-1 | K10-WS | D10-WS | | 49-814 |
| 44 | Z | C3M-S12 | RB-36 | GND-25 | 49-867 | 49-857 |
| 44 | Z | C3M-S20 | RB-36 | GND-25 | 49-867 | 49-857 |
| 44 | W | HD-10-1 | K10-HD | D10-HD | 49-849 | 49-847 |
| 44 | W | HD-11-318 | K10-HD | D10-HD | 49-849 | 49-847 |
| 46 | W | HD-16-318 | K10-HD | D10-HD | 49-849 | 49-847 |
| 46 | W | HD-24-1 | K10-HD | D10-HD | 49-849 | 49-847 |
| 46 | W | HD-24-318 | K10-HD | D10-HD | 49-849 | 49-847 |
| 46 | W | HD-8-318 | K10-HD | D10-HD | 49-849 | 49-847 |
| 46 | W | HD-9-1 | K10-HD | D10-HD | 49-849 | 49-847 |
| 51 | W | WS-1-1 | K10-WS | D10-WS | | 49-814 |
| 51 | W | WS-11-1 | K10-WS | D10-WS | | 49-814 |
| 64 | W | WJ-34-1 | K10-WJ | D10-WJ | 49-873 | 49-843 |
| 64 | W | WJ-48-1 | K11-WJ | D11-WJ | | |
| 64 | W | WJ-6-1 | K11-WJ | D11-WJ | | |
| 64 | W | WJ-10-1 | K11-WJ | D11-WJ | | |
| 64 | W | WJ-76-318 | K13-WJ | D11-WJ | | |
| 66 | W | WJ-76-318 | K13-WJ | D11-WJ | | |
| 66 | W | WJ-66-1 | K11-WJ | D11-WJ | | |
| 66 | W | WJ-86-318 | K15-WJ | D11-WJ | | |
| 66 | W | WJ-48-1 | K11-WJ | D11-WJ | | |
| 70 | T | | | DG3HL | | 49-813 |
| 70 | T | HL-324A | | DG-5HL | | 49-801 |
| 70 | T | HL-331A | | DG-5HL | | 49-801 |
| 70 | Z | LB-S9 | RB-42 | GND-30 | 49-879 | |
| 75 | W | WS-1-1 | K10-WS | D10-WS | | 49-814 |
| 75 | W | WS-11-1 | K10-WS | D10-WS | | 49-814 |
| 76 | W | WS-11-1 | K10-WS | D10-WS | | 49-814 |
| 90 | Z | LB-S9 | RB-42 | GND-30 | 49-879 | |
| 1111 | W | WJ-112-318 | K15-WJ | D12-WJ | | |
| 1120 | W | WT-21-1 | K10-WAT | D10-WAT | 49-816 | 49-812 |
| 1121 | W | WT-581-1 | K26-WAT | D26-WAT | | |
| 1121 | W | WT-195-1 | K10-WAT | D10-WAT | 49-816 | 49-812 |
| 1121 | W | WT-22-1 | K10-WAT | D10-WAT | 49-816 | 49-812 |
| 1121 | W | WT-394-318 | K20-WAT | D10-WAT | 49-831 | 49-812 |
| 1121 | W | WT-395-1 | K20-WAT | D10-WAT | 49-831 | 49-812 |
| 1122 | W | WJ-10-1 | K11-WJ | D11-WJ | | |
| 1122 | W | WJ-35-1 | K10-WJ | D10-WJ | 49-873 | 49-843 |
| 1122 | W | WJ-41-318 | K10-WJ | D10-WJ | 49-873 | 49-843 |
| 1122 | W | WJ-42-1 | K10-WJ | D10-WJ | 49-873 | 49-843 |
| 1122 | W | WJ-52-1 | K11-WJ | D11-WJ | | |
| 1122 | W | WJ-66-1 | K11-WJ | D11-WJ | | |
| 1122 | W | WJ-62-1 | K11-WJ | D11-WJ | | |
| 1122 | W | WJ-86-318 | K15-WJ | D11-WJ | | |
| 1122 | W | WJ-76-318 | K13-WJ | D11-WJ | | |
| 1127 | W | HD-18-318 | K10-HD | D10-HD | 49-849 | 49-847 |
| 1127 | W | HD-19-318 | K10-HD | D10-HD | 49-849 | 49-847 |
| 1128 | W | HD-11-318 | K10-HD | D10-HD | 49-849 | 49-847 |
| 1129 | Z | C1Q-S61 | RB-69 | GND-39 | 49-904 | |
| 1137 | Z | C1Q-S103 | RB-69 | GND-39 | 49-904 | |
| 1137 | Z | C1Q-S104 | RB-69 | GND-39 | 49-904 | |
| 1138 | W | HD-41-318 | K20-HD | D20-HD | | |
| 4116 | W | HD-1-1 | K10-HD | D10-HD | 49-849 | 49-847 |
| 4128 | W | WT-446-1 | K20-WAT | D10-WAT | 49-831 | 49-812 |

CARB = Original OEM Carburetor

**B** = Bing
**N** = Nikki
**T** = Tillotson
**TK** = Teiki
**W** = Walbro
**Z** = Zama

*** No model information available

# Carburetor Kit Application Chart

| OEM ENGINE/UNIT | | WALBRO CARBURETOR | | | OREGON | |
|---|---|---|---|---|---|---|
| Model | Carb | № | Kit | Gaskets | Kit | Gaskets |
| **Stihl** | | | | | | |
| 4128 | W | WT-446-1 | K20-WAT | D10-WAT | 49-831 | 49-812 |
| 4130 | W | WT-327-1 | K20-WAT | D10-WAT | 49-831 | 49-812 |
| 4130 | W | WT-444-1 | K20-WAT | D10-WAT | 49-831 | 49-812 |
| 4130 | W | WT-160-1 | K20-WAT | D20-WAT | 49-831 | 49-844 |
| 4140 | Z | C1Q-S71 | RB-100 | GND-56 | | |
| 4180 | Z | C1Q-S72 | RB-97 | GND-55 | | |
| 4180 | Z | C1Q-S88 | RB-114 | GND-55 | 49-287 | |
| 4203 | W | HD-2-1 | K10-HD | D10-HD | 49-849 | 49-847 |
| 4203 | W | WT-230-1 | K10-WAT | D10-WAT | 49-816 | 49-812 |
| 4203 | W | WT-230-1 | K10-WAT | D10-WAT | 49-816 | 49-812 |
| 4203 | W | WT-230-1 | K10-WAT | D10-WAT | 49-816 | 49-812 |
| 4203 | W | WT-230-1 | K10-WAT | D10-WAT | 49-816 | 49-812 |
| 4228 | Z | C1Q-S54 | RB-84 | GND-50 | | |
| 4228 | Z | C1Q-S67 | RB-96 | GND-53 | | |
| 4237 | Z | C1Q-S105 | RB-99 | GND-56 | | |
| 4237 | Z | C1Q-S111 | RB-99 | GND-56 | | |
| 008S | Z | LA-S8 | RB-42 | GND-30 | 49-879 | |
| 009 AV | W | WA-56-1 | K10-WAT | D10-WAT | 49-816 | 49-812 |
| 010 AV | W | WA-56-1 | K10-WAT | D10-WAT | 49-816 | 49-812 |
| 011 AV | W | WA-99-1 | K10-WAT | D10-WAT | 49-816 | 49-812 |
| 015 AV | W | HDC-17-1 | K10-HDC | D10-HDC | 49-833 | 49-807 |
| 015 L | W | HDC-17-1 | K10-HDC | D10-HDC | 49-833 | 49-807 |
| 019T | Z | C1Q-S46 | RB-72 | GND-35 | | |
| 019T | Z | C1Q-S37 | RB-72 | GND-35 | | |
| 020 AV | W | WA-1-1 | K10-WAT | D10-WAT | 49-816 | 49-812 |
| 020 AV | W | WA-86-1 | K10-WAT | D10-WAT | 49-816 | 49-812 |
| 020 AVPS | W | WA-86-1 | K10-WAT | D10-WAT | 49-816 | 49-812 |
| 020AVPSEQ | T | HU-7A | RK-14HU | DG-3HU | 49-805 | 49-804 |
| 020T | Z | C1Q-S16 | RB-41 | GND-35 | 49-898 | |
| 024 AV | W | WT-110-318 | K20-WAT | D10-WAT | 49-831 | 49-812 |
| 024 AV | W | WT-22-1 | K10-WAT | D10-WAT | 49-816 | 49-812 |
| 024 S | W | WT-22-1 | K10-WAT | D10-WAT | 49-816 | 49-812 |
| 024AVEQ | T | HU-54F | RK-14HU | DG-3HU | 49-805 | 49-804 |
| 024S AV | W | WT-110-318 | K20-WAT | D10-WAT | 49-831 | 49-812 |
| 028 AV | W | WA-128-1 | K10-WAT | D10-WAT | 49-816 | 49-812 |
| 028AVEQ | T | HU-40D | RK-14HU | DG-3HU | 49-805 | 49-804 |
| 030AV | T | HU-3G | RK-14HU | DG-3HU | 49-805 | 49-804 |
| 031 AV | W | WA-2-1 | K10-WAT | D10-WAT | 49-816 | 49-812 |
| 031 AV | W | WA-2-1 | K10-WAT | D10-WAT | 49-816 | 49-812 |
| 031AV | T | HU-3G | RK-14HU | DG-3HU | 49-805 | 49-804 |
| 032 AV | W | WA-49-1 | K10-WAT | D10-WAT | 49-816 | 49-812 |
| 032AVE | T | HU-51B | RK-14HU | DG-3HU | 49-805 | 49-804 |
| 034 SUPER | Z | C3A-S4 | RB-31 | GND-21 | 49-899 | 49-893 |
| 034 THERMOSTAT | Z | C3A-S25 | RB-31 | GND-21 | 49-899 | 49-893 |
| 034 THERMOSTAT | Z | C3A-S26 | RB-31 | GND-21 | 49-899 | 49-893 |
| 034AVEQ | T | HK-43B | | | | 49-800 |
| 036 ARCTIC | Z | C3A-S27 | RB-31 | GND-21 | 49-899 | 49-893 |
| 036 PRO | Z | C3A-S39 | RB-31 | GND-21 | 49-899 | 49-893 |
| 036QS | Z | C3A-S39 | RB-31 | GND-21 | 49-899 | 49-893 |
| 038AVMEQ | T | HK-5A | | DG-1HK | | 49-800 |
| 044 (EARLY) | Z | C3M-S5 D-G | RB-36 | GND-26 | 49-867 | |
| 044 AUTO CHOKE | Z | C3M-S21 | RB-36 | GND-25 | 49-867 | 49-857 |
| 044 CARB HEATING | Z | C3M-S23 | RB-36 | GND-25 | 49-867 | 49-857 |
| 044 CARB HEATING | Z | C3M-S24 | RB-36 | GND-25 | 49-867 | 49-857 |
| 044 P.T.C.CARB HTG | Z | C3M-S22 | RB-36 | GND-25 | 49-867 | 49-857 |
| 048 AV | W | WS-14-1 | K10-WS | D10-WS | | 49-814 |
| 051 AV | W | WS-11-1 | K10-WS | D10-WS | | 49-814 |
| 066 Magnum | W | WJ-51-318 | K11-WJ | D11-WJ | | |
| 066 Magnum | W | WJ-66-1 | K11-WJ | D11-WJ | | |
| 066 Magnum | W | WJ-62-1 | K11-WJ | D11-WJ | | |
| 075 AV | W | WS-11-1 | K10-WS | D10-WS | | 49-814 |
| 08 SEQ | T | HL-292C | | DG-5HL | | 49-801 |
| 090AVR | T | HL-324A | | DG-5HL | | 49-801 |
| 1133/MS280 | W | HD-39-318 | K20-HD | D20-HD | | |
| 4140 CA Version | Z | C1Q-S62 | RB-93 | GND-53 | | |
| 4180 EMU trimmer | Z | C1Q-S81 | RB-114 | GND-55 | 49-287 | |
| 4223/TS400 | W | WJ-108-318 | K15-WJ | D11-WJ | | |
| 4229 BG45 | Z | C1Q-S73 | RB-100 | GND-56 | | |
| 4314 BT45 | Z | C1Q-S74 | RB-106 | GND-58 | | |
| 4601 EMU Mini-Tiller | Z | C1Q-S79 | RB-100 | GND-56 | | |
| 4601 MM55 Tiller | Z | C1Q-S93 | RB-100 | GND-56 | | |

CARB = Original OEM Carburetor

**B** = Bing
**N** = Nikki
**T** = Tillotson
**TK** = Teiki
**W** = Walbro
**Z** = Zama

*** No model information available

| OEM ENGINE/UNIT | | WALBRO CARBURETOR | | | OREGON | |
|---|---|---|---|---|---|---|
| Model | Carb | № | Kit | Gaskets | Kit | Gaskets |
| **Stihl** | | | | | | |
| BG4227 | Z | C1Q-S47 | RB-85 | GND-51 | | |
| BG45 | Z | C1Q-S48 | RB-89 | GND-50 | 49-288 | |
| BG45 | Z | C1Q-S64 | RB-89 | GND-50 | 49-288 | |
| BG45 | Z | C1Q-S112 | RB-148 | GND-56 | | |
| BG46 | Z | C1Q-S48 | RB-89 | GND-50 | 49-288 | |
| BG46 | Z | C1Q-S64 | RB-89 | GND-50 | 49-288 | |
| BG55 | Z | C1Q-S48 | RB-89 | GND-50 | 49-288 | |
| BG55 | Z | C1Q-S64 | RB-89 | GND-50 | 49-288 | |
| BG55 | Z | C1Q-S50 | RB-79 | GND-39 | | |
| BG55 | Z | C1Q-S55 | RB-89 | GND-50 | 49-288 | |
| BG65 | Z | C1Q-S50 | RB-79 | GND-39 | | |
| BG65 | Z | C1Q-S55 | RB-89 | GND-50 | 49-288 | |
| BG75 | Z | C1Q-S30 | RB-66 | GND-28 | 49-892-0 | 49-883 |
| BG85 | Z | C1Q-S50 | RB-79 | GND-39 | | |
| BG85 | Z | C1Q-S55 | RB-89 | GND-50 | 49-288 | |
| BG85 | Z | C1Q-S68 | RB-99 | GND-56 | | |
| BR 320 | W | HD-2-1 | K10-HD | D10-HD | 49-849 | 49-847 |
| BR 320 L | W | WT-331-1 | K10-WAT | D10-WAT | 49-816 | 49-812 |
| BR 320 L | W | WT-230-1 | K10-WAT | D10-WAT | 49-816 | 49-812 |
| BR 320 L | W | WT-331-1 | K10-WAT | D10-WAT | 49-816 | 49-812 |
| BR 400 | W | HD-7-1 | K10-HD | D10-HD | 49-849 | 49-847 |
| BR 420 | W | HD-28-1 | K10-HD | D10-HD | 49-849 | 49-847 |
| BR106 | Z | C1Q-SK6 | RB-40 | GND-28 | 49-907 | 49-883 |
| BR500 | Z | C1Q-S99 | RB-134 | GND-72 | | |
| BR600 | Z | C1Q-S100 | RB-134 | GND-72 | | |
| BRS50 | Z | C1Q-S101 | RB-134 | GND-72 | | |
| BT106 | Z | C1Q-SK4 | RB-40 | GND-28 | 49-907 | 49-883 |
| BT106 | Z | C1Q-SK5 | RB-40 | GND-28 | 49-907 | 49-883 |
| E 26 D | W | WYK-139-1 | K21-WYK | D21-WYK | | |
| EX162 | W | WYK-248-1 | K21-WYK | D21-WYK | | |
| FC55 | Z | C1Q-S44 | RB-66 | GND-28 | 49-892-0 | 49-883 |
| FC75 | Z | C1Q-S28 | RB-66 | GND-28 | 49-892-0 | 49-883 |
| FC75 | Z | C1Q-S45 | RB-66 | GND-28 | 49-892-0 | 49-883 |
| FC75 | Z | C1Q-S56 | RB-85 | GND-51 | | |
| FC85 | Z | C1Q-S45 | RB-66 | GND-28 | 49-892-0 | 49-883 |
| FH75 | Z | C1Q-S28 | RB-66 | GND-28 | 49-892-0 | 49-883 |
| FH75 | Z | C1Q-S45 | RB-66 | GND-28 | 49-892-0 | 49-883 |
| FH75 | Z | C1Q-S56 | RB-85 | GND-51 | | |
| FS 22 RP | W | WYK-16-1 | K21-WYK | D21-WYK | | |
| FS 22 RP | W | WYK-16-1 | K21-WYK | D21-WYK | | |
| FS 220 | W | WT-51-1 | K10-WAT | D10-WAT | 49-816 | 49-812 |
| FS 220 | W | WT-70-1 | K20-WAT | D10-WAT | 49-831 | 49-812 |
| FS 360 | W | HD-1-1 | K10-HD | D10-HD | 49-849 | 49-847 |
| FS 450 | W | WT-446-1 | K20-WAT | D10-WAT | 49-831 | 49-812 |
| FS 500 | W | HD-23-318 | K10-HD | D10-HD | 49-849 | 49-847 |
| FS 550 | W | HD-23-318 | K10-HD | D10-HD | 49-849 | 49-847 |
| FS 550 | W | HD-22-318 | K10-HD | D10-HD | 49-849 | 49-847 |
| FS 68 | W | WT-204-1 | K10-WAT | D10-WAT | 49-816 | 49-812 |
| FS 72 | W | WT-393-1 | K10-WAT | D10-WAT | 49-816 | 49-812 |
| FS 74 | W | WT-393-1 | K10-WAT | D10-WAT | 49-816 | 49-812 |
| FS 76 | W | WT-393-1 | K10-WAT | D10-WAT | 49-816 | 49-812 |
| FS 78 | W | WT-204-1 | K10-WAT | D10-WAT | 49-816 | 49-812 |
| FS106 | Z | C1Q-SK5 | RB-40 | GND-28 | 49-907 | 49-883 |
| FS-106 | Z | C1S-SK1 | RB-13 | GND-7 | | 49-859 |
| FS-106 | Z | C1S-SK2 | RB-13 | GND-7 | | 49-859 |
| FS108 | Z | C1Q-SK5 | RB-40 | GND-28 | 49-907 | 49-883 |
| FS-108 | Z | C1Q-SK4 | RB-40 | GND-28 | 49-907 | 49-883 |
| FS108 (CARB) | Z | C1Q-SK7 | RB-40 | GND-28 | 49-907 | 49-883 |
| FS120 | Z | C1Q-S51 | RB-40 | GND-28 | 49-907 | 49-883 |
| FS120 | Z | C1Q-S82 | RB-89 | GND-50 | 49-288 | |
| FS130R | Z | C1Q-S98 | RB-132 | GND-72 | | |
| FS160 | Z | C1S-S2 | RB-120 | GND-7 | | 49-859 |
| FS180 | Z | C1S-S2 | RB-120 | GND-7 | | 49-859 |
| FS200 | Z | C1Q-S83 | RB-89 | GND-50 | 49-288 | |
| FS200 | Z | C1Q-S51D | RB-40 | GND-28 | 49-907 | 49-883 |
| FS220 | Z | C1S-S3 | RB-13 | GND-7 | | 49-859 |
| FS22RP | W | WYK-16-1 | K21-WYK | D21-WYK | | |
| FS22RP | W | WYK-16-1 | K21-WYK | D21-WYK | | |
| FS250 | Z | C1Q-S51D | RB-40 | GND-28 | 49-907 | 49-883 |
| FS250 | Z | C1Q-S83 | RB-89 | GND-50 | 49-288 | |
| FS280 | Z | C1S-S3 | RB-13 | GND-7 | | 49-859 |
| FS300 | Z | C1Q-S35 | RB-40 | GND-28 | 49-907 | 49-883 |
| FS300 | Z | C1Q-S36 | RB-40 | GND-28 | 49-907 | 49-883 |
| FS300 | Z | C1Q-S51D | RB-40 | GND-28 | 49-907 | 49-883 |
| FS300 | Z | C1Q-S82 | RB-89 | GND-50 | 49-288 | |
| FS350 | Z | C1Q-S35 | RB-40 | GND-28 | 49-907 | 49-883 |
| FS350 | Z | C1Q-S36 | RB-40 | GND-28 | 49-907 | 49-883 |
| FS350 | Z | C1Q-S83 | RB-89 | GND-50 | 49-288 | |
| FS38 | Z | C1Q-S97 | RB-100 | GND-56 | | |
| FS38 | Z | C1Q-S95 | RB-100 | GND-56 | | |

C

# Carburetor Kit Application Chart

| OEM ENGINE/UNIT | | WALBRO CARBURETOR | | | OREGON | |
|---|---|---|---|---|---|---|
| Model | Carb | № | Kit | Gaskets | Kit | Gaskets |
| **Stihl** | | | | | | |
| FS400 | Z | C1Q-S34 | RB-40 | GND-28 | 49-907 | 49-883 |
| FS4128 | Z | C1Q-S113 | RB-147 | GND-50 | 49-288 | |
| FS4137 | Z | C1Q-S41B | RB-85 | GND-51 | | |
| FS45 | Z | C1Q-S66 | RB-84 | GND-50 | 49-288 | |
| FS450 | Z | C1Q-S33 | RB-40 | GND-28 | 49-907 | 49-883 |
| FS450 | Z | C1Q-S34 | RB-40 | GND-28 | 49-907 | 49-883 |
| FS46 | Z | C1Q-S44 | RB-66 | GND-28 | 49-892-0 | 49-883 |
| FS46 | Z | C1Q-S53 | RB-85 | GND-51 | | |
| FS46 | Z | C1Q-S66 | RB-84 | GND-50 | 49-288 | |
| FS55 | Z | C1Q-S44 | RB-66 | GND-28 | 49-892-0 | 49-883 |
| FS55 | Z | C1Q-S53 | RB-85 | GND-51 | | |
| FS55 | Z | C1Q-S58 | RB-89 | GND-50 | 49-288 | |
| FS55 | Z | C1Q-S66 | RB-84 | GND-50 | 49-288 | |
| FS75 | Z | C1Q-S28 | RB-66 | GND-28 | 49-892-0 | 49-883 |
| FS75 | Z | C1Q-S45 | RB-66 | GND-28 | 49-892-0 | 49-883 |
| FS75 | Z | C1Q-S63 | RB-84 | GND-50 | | |
| FS80 | Z | C1Q-S28 | RB-66 | GND-28 | 49-892-0 | 49-883 |
| FS80 | Z | C1Q-S45 | RB-66 | GND-28 | 49-892-0 | 49-883 |
| FS80 | Z | C1Q-S63 | RB-84 | GND-50 | | |
| FS85 | Z | C1Q-S28 | RB-66 | GND-28 | 49-892-0 | 49-883 |
| FS85 | Z | C1Q-S45 | RB-66 | GND-28 | 49-892-0 | 49-883 |
| FS85 | Z | C1Q-S63 | RB-84 | GND-50 | | |
| FS90 | Z | C1Q-S110 | RB-97 | GND-55 | | |
| H 20 | W | WT-219-1 | K10-WAT | D10-WAT | 49-816 | 49-812 |
| H22 D | W | WYK-20-1 | K21-WYK | D21-WYK | | |
| H 22 D | W | WYK-39-1 | K21-WYK | D21-WYK | | |
| H 22 D | W | WYL-18-1 | K20-WYL | D11-WYL | | |
| H 24 | W | WT-219-1 | K10-WAT | D10-WAT | 49-816 | 49-812 |
| H 24 D | W | WYJ-180-1 | K20-WYJ | D20-WYJ | 49-882 | |
| H 26 D | W | WYJ-180-1 | K20-WYJ | D20-WYJ | 49-882 | |
| H 31 | W | WT-219-1 | K10-WAT | D10-WAT | 49-816 | 49-812 |
| H 35 | W | WT-219-1 | K10-WAT | D10-WAT | 49-816 | 49-812 |
| HB26 | W | WT-768-1 | K10-WAT | D10-WAT | 49-816 | 49-812 |
| HL45 | Z | C1Q-S44 | RB-66 | GND-28 | 49-892-0 | 49-883 |
| HL45 | Z | C1Q-S53 | RB-85 | GND-51 | | |
| HL75 | Z | C1Q-S28 | RB-66 | GND-28 | 49-892-0 | 49-883 |
| HL75 | Z | C1Q-S45 | RB-66 | GND-28 | 49-892-0 | 49-883 |
| HL75 | Z | C1Q-S56 | RB-85 | GND-51 | | |
| HS 151 | W | HDC-17-1 | K10-HDC | D10-HDC | 49-833 | 49-807 |
| HS45 | Z | C1Q-S49 | RB-83 | GND-39 | | |
| HS45 | Z | C1Q-S70 | RB-100 | GND-56 | | |
| HS75 | Z | C1Q-S29 | RB-66 | GND-28 | 49-892-0 | 49-883 |
| HS75 | Z | C1Q-S42 | RB-85 | GND-51 | | |
| HS80 | Z | C1Q-S29 | RB-66 | GND-28 | 49-892-0 | 49-883 |
| HS80 | Z | C1Q-S42 | RB-85 | GND-51 | | |
| HS85 | Z | C1Q-S29 | RB-66 | GND-28 | 49-892-0 | 49-883 |
| HS85 | Z | C1Q-S42 | RB-85 | GND-51 | | |
| HT70 | Z | C1Q-S28 | RB-66 | GND-28 | 49-892-0 | 49-883 |
| HT70 | Z | C1Q-S45 | RB-66 | GND-28 | 49-892-0 | 49-883 |
| HT70 | Z | C1Q-S63 | RB-84 | GND-50 | | |
| HT75 | Z | C1Q-S28 | RB-66 | GND-28 | 49-892-0 | 49-883 |
| HT75 | Z | C1Q-S45 | RB-66 | GND-28 | 49-892-0 | 49-883 |
| HT75 | Z | C1Q-S45 | RB-66 | GND-28 | 49-892-0 | 49-883 |
| HT75 | Z | C1Q-S56 | RB-85 | GND-51 | | |
| HT75 | Z | C1Q-S63 | RB-84 | GND-50 | | |
| L 22 D | W | WYK-38-1 | K21-WYK | D21-WYK | | |
| L 22 D | W | WYJ-299-1 | K20-WYJ | D20-WYJ | 49-882 | |
| L 22 D | W | WT-496-1 | K20-WAT | D10-WAT | 49-831 | 49-812 |
| L 24 D | W | WT-321-1 | K10-WAT | D10-WAT | 49-816 | 49-812 |
| L 26 D | W | WYJ-23-1 | K20-WYJ | D20-WYJ | 49-882 | |
| L 26 D | W | WYJ-48-1 | K20-WYJ | D20-WYJ | 49-882 | |
| L 26 D | W | WYK-24-1 | K21-WYK | D21-WYK | | |
| L 26 D | W | WYK-40-1 | K21-WYK | D21-WYK | | |
| L 26 D | W | WT-474-1 | K20-WAT | D10-WAT | 49-831 | 49-812 |
| L 35 DH | W | WYK-69-1 | K21-WYK | D21-WYK | | |
| LS 65 | W | WT-41-1 | K10-WAT | D10-WAT | 49-816 | 49-812 |
| M 23 D | W | WYB-3-1 | K10-WYB | D10-WYB | | |
| M 23 D | W | WYK-78-1 | K21-WYK | D21-WYK | | |
| M 26 D | W | WYK-82-1 | XXX | XXX | | |
| M 35 D | W | WT-462-1 | K20-WAT | D10-WAT | 49-831 | 49-812 |
| M 57 D | W | WYK-124-1 | K21-WYK | D21-WYK | | |
| M23D | W | WYK-220-1 | K21-WYK | D21-WYK | | |
| M23D | W | WYB-13-1 | K10-WYB | D10-WYB | | |
| MS 270 | W | HD-27-1 | K10-HD | D10-HD | 49-849 | 49-847 |
| MS191T | Z | C1Q-S59 | RB-91 | GND-39 | | |
| MS200 | Z | C1Q-S96 | RB-69 | GND-39 | 49-904 | |
| MS210 | Z | C1Q-S87 | RB-105 | GND-35 | | |
| MS210 | Z | C1Q-S89 | RB-105 | GND-35 | | |
| MS210 | Z | C1Q-S90 | RB-105 | GND-35 | | |
| MS210 | Z | C1Q-S102 | RB-105 | GND-35 | | |

| OEM ENGINE/UNIT | | WALBRO CARBURETOR | | | OREGON | |
|---|---|---|---|---|---|---|
| Model | Carb | № | Kit | Gaskets | Kit | Gaskets |
| **Stihl** | | | | | | |
| MS210 | Z | C1Q-S106 | RB-105 | GND-35 | | |
| MS210 | Z | C1Q-S86 | RB-105 | GND-35 | | |
| MS210 SAW US. | Z | C1Q-S77 | RB-105 | GND-35 | | |
| MS230 | Z | C1Q-S92 | RB-105 | GND-35 | | |
| MS230 EU | Z | C1Q-S84 | RB-105 | GND-35 | | |
| MS230 EU | Z | C1Q-S85 | RB-105 | GND-35 | | |
| MS230 EU | Z | C1Q-S91 | RB-105 | GND-35 | | |
| MS250 | Z | C1Q-S92 | RB-105 | GND-35 | | |
| MS250 | Z | C1Q-S107 | RB-105 | GND-35 | | |
| MS250 W/Primer | Z | C1Q-S75 | RB-105 | GND-35 | | |
| MS250 EU | Z | C1Q-S84 | RB-105 | GND-35 | | |
| MS250 EU | Z | C1Q-S85 | RB-105 | GND-35 | | |
| MS250 EU | Z | C1Q-S91 | RB-105 | GND-35 | | |
| MS250 No/Primer | Z | C1Q-S76 | RB-105 | GND-35 | | |
| MS360 | Z | C3A-S31 | RB-31 | GND-21 | 49-899 | 49-893 |
| MS360 | Z | C3A-S39 | RB-31 | GND-21 | 49-899 | 49-893 |
| MS360 | Z | C3A-S65 | RB-31 | GND-21 | 49-899 | 49-893 |
| 036 | Z | C3A-S31 | RB-31 | GND-21 | 49-899 | 49-893 |
| SH55 | Z | C1Q-S50 | RB-79 | GND-39 | | |
| SH55 | Z | C1Q-S55 | RB-89 | GND-50 | 49-288 | |
| SH55 | Z | C1Q-S64 | RB-89 | GND-50 | 49-288 | |
| SH85 | Z | C1Q-S50 | RB-79 | GND-39 | | |
| SH85 | Z | C1Q-S55 | RB-89 | GND-50 | 49-288 | |
| SH85 | Z | C1Q-S64 | RB-89 | GND-50 | 49-288 | |
| SR 360 | W | HD-2-1 | K10-HD | D10-HD | 49-849 | 49-847 |
| TF350AVE | T | HL-327C | | DG-5HL | | 49-801 |
| TS-08 | T | HL-292C | | DG-5HL | | 49-801 |
| TS-350 | T | HL-292E | | DG-5HL | | 49-801 |
| TS350S | Z | LA-S6 | RB-42 | GND-30 | 49-879 | |
| TS360AVS | Z | LA-S7 | RB-42 | GND-30 | 49-879 | |
| **Tanaka** | | | | | | |
| AS 25 MS | W | WYJ-288-1 | K20-WYJ | D20-WYJ | 49-882 | |
| AS 4501 | W | WYL-69-1 | K20-WYL | D11-WYL | | |
| ASC 6000 | W | WYK-1-1 | K20-WYK | D20-WYK | | |
| ASM 220 | W | WZ-36-1 | K10-WZ | D10-WZ | 49-877 | 49-848 |
| ASM 220 A | W | WZ-37-1 | K10-WZ | D10-WZ | 49-877 | 49-848 |
| AST 225 | W | WZ-46-1 | K10-WZ | D10-WZ | 49-877 | 49-848 |
| AST 250 | W | WZ-47-1 | K10-WZ | D10-WZ | 49-877 | 49-848 |
| AST 4500 | W | WYL-21-1 | K20-WYL | D11-WYL | | |
| AST 5000 | W | WZ-40-1 | K10-WZ | D10-WZ | 49-877 | 49-848 |
| AST 7000 | W | WZ-34-1 | K10-WZ | D10-WZ | 49-877 | 49-848 |
| BE 101 | W | WPF-4-1 | K10-WPF | | | |
| BE 48 | W | HDA-131-1 | K20-HDA | D10-HDA | 49-845 | |
| CB 2010 B | W | WYL-17-1 | K20-WYL | D11-WYL | | |
| ECS 290 | W | WT-50-1 | K10-WAT | D10-WAT | 49-816 | 49-812 |
| ECS 290 | W | WT-65-1 | K10-WAT | D10-WAT | 49-816 | 49-812 |
| ECS 320 | W | WT-145-1 | K10-WAT | D10-WAT | 49-816 | 49-812 |
| ECS 320 | W | WT-146-1 | K10-WAT | D10-WAT | 49-816 | 49-812 |
| ECS 330 | W | WT-145-1 | K10-WAT | D10-WAT | 49-816 | 49-812 |
| ECS 330 | W | WT-146-1 | K10-WAT | D10-WAT | 49-816 | 49-812 |
| ECS 3300 | W | WT-613-1 | K10-WAT | D10-WAT | 49-816 | 49-812 |
| ECS 3300 | W | WT-516-1 | K20-WAT | D10-WAT | 49-831 | 49-812 |
| ECS 3300 | W | WT-517-1 | K20-WAT | D10-WAT | 49-831 | 49-812 |
| ECS 3300 B | W | WT-407-1 | K10-WAT | D10-WAT | 49-816 | 49-812 |
| ECS 3301 | W | WT-478-1 | K20-WAT | D10-WAT | 49-831 | 49-812 |
| ECS 3301 | W | WT-527-1 | K20-WAT | D20-WAT | 49-831 | 49-844 |
| ECS 350 | W | WA-65-1 | K10-WAT | D10-WAT | 49-816 | 49-812 |
| ECS 350 | W | WA-166-1 | K10-WAT | D10-WAT | 49-816 | 49-812 |
| ECS 3500 | W | WT-139-1 | K10-WAT | D10-WAT | 49-816 | 49-812 |
| ECS 3500 | W | WT-144-1 | K10-WAT | D10-WAT | 49-816 | 49-812 |
| ECS 3500 | W | WA-151-1 | K10-WAT | D10-WAT | 49-816 | 49-812 |
| ECS 351 | W | WA-166-1 | K10-WAT | D10-WAT | 49-816 | 49-812 |
| ECS 351 | W | WA-65-1 | K10-WAT | D10-WAT | 49-816 | 49-812 |
| ECS 355 | W | WA-166-1 | K10-WAT | D10-WAT | 49-816 | 49-812 |
| ECS 355 | W | WA-65-1 | K10-WAT | D10-WAT | 49-816 | 49-812 |
| ECS 356 | W | WA-166-1 | K10-WAT | D10-WAT | 49-816 | 49-812 |
| ECS 356 | W | WA-65-1 | K10-WAT | D10-WAT | 49-816 | 49-812 |
| ECS 370 | W | WA-126-1 | K10-WAT | D10-WAT | 49-816 | 49-812 |
| ECS 4000 | W | WT-176-1 | K10-WAT | D10-WAT | 49-816 | 49-812 |

CARB = Original OEM Carburetor

**B** = Bing
**N** = Nikki
**T** = Tillotson
**TK** = Teiki
**W** = Walbro
**Z** = Zama

*** No model information available

C

# Carburetor Kit Application Chart

| OEM ENGINE/UNIT | | WALBRO CARBURETOR | | | OREGON | |
|---|---|---|---|---|---|---|
| Model | Carb | № | Kit | Gaskets | Kit | Gaskets |
| **Tanaka** | | | | | | |
| ECS 4000 | W | WT-243-1 | K10-WAT | D10-WAT | 49-816 | 49-812 |
| ECS 405 | W | WA-126-1 | K10-WAT | D10-WAT | 49-816 | 49-812 |
| ECS 415 | W | WA-154-1 | K10-WAT | D10-WAT | 49-816 | 49-812 |
| ECS 415 | W | WA-155-1 | K10-WAT | D10-WAT | 49-816 | 49-812 |
| ECS 506 | W | HDA-13-1 | K20-HDA | D10-HDA | 49-845 | |
| ECS 506 | W | HDA-15-1 | K20-HDA | D10-HDA | 49-845 | |
| ECS 506 | W | HDA-54-1 | K22-HDA | D22-HDA | 49-853 | 49-852 |
| ECS 650 | W | HDA-13-1 | K20-HDA | D10-HDA | 49-845 | |
| ECS 650 | W | HDA-54-1 | K22-HDA | D22-HDA | 49-853 | 49-852 |
| ECV 4501 | W | WT-497-1 | K20-WAT | D20-WAT | 49-831 | 49-844 |
| ECV 4501 | W | WT-484-1 | K20-WAT | D10-WAT | 49-831 | 49-812 |
| EHC 120 | W | HDA-13-1 | K20-HDA | D10-HDA | 49-845 | |
| GR 24 | W | WYJ-59-1 | K20-WYJ | D20-WYJ | 49-882 | |
| GR 26 | W | WYJ-60-1 | K20-WYJ | D20-WYJ | 49-882 | |
| HD 200 | W | WY-68-1 | K10-WY | D10-WY | 49-875 | 49-839 |
| K 2550 | W | WYJ-64-1 | K20-WYJ | D20-WYJ | 49-882 | |
| MC 38 | W | WT-265-1 | K10-WAT | D10-WAT | 49-816 | 49-812 |
| PB 30 | W | WY-15-1 | K10-WY | D10-WY | 49-875 | 49-839 |
| PB 312 | W | WT-217-1 | K10-WAT | D10-WAT | 49-816 | 49-812 |
| PF 270 | W | WYJ-260-1 | K20-WYJ | D20-WYJ | 49-882 | |
| PF 270 | W | WYJ-268-1 | K20-WYJ | D20-WYJ | 49-882 | |
| PF 270 | W | WYJ-243-1 | K20-WYJ | D20-WYJ | 49-882 | |
| PF 4210 | W | WYJ-273-1 | K20-WYJ | D20-WYJ | 49-882 | |
| PH 250 | W | WYL-139-1 | K20-WYL | D11-WYL | | |
| PH-250 | W | WYL-140-1 | K20-WYL | D11-WYL | | |
| PMS 335 A | W | WT-404-1 | K10-WAT | D10-WAT | 49-816 | 49-812 |
| QUM 268 | W | WPF-6-1 | K10-WPF | | | |
| SP 351 | W | WA-150-1 | K10-WAT | D10-WAT | 49-816 | 49-812 |
| SP 380 | W | WA-150-1 | K10-WAT | D10-WAT | 49-816 | 49-812 |
| SP 380 | W | WT-250-1 | K10-WAT | D10-WAT | 49-816 | 49-812 |
| SP 380 | W | WT-265-1 | K10-WAT | D10-WAT | 49-816 | 49-812 |
| SP 410 | W | WT-250-1 | K10-WAT | D10-WAT | 49-816 | 49-812 |
| SP 411 | W | WA-151-1 | K10-WAT | D10-WAT | 49-816 | 49-812 |
| SP 471 D | W | WA-206-1 | K10-WAT | D10-WAT | 49-816 | 49-812 |
| SP 480 | W | WT-251-1 | K10-WAT | D10-WAT | 49-816 | 49-812 |
| ST 1600 | W | WA-182-1 | K10-WAT | D10-WAT | 49-816 | 49-812 |
| ST 2048 | W | WYL-15-1 | K20-WYL | D11-WYL | | |
| ST 2050 | W | WYL-15-1 | K20-WYL | D11-WYL | | |
| ST 2050H | W | WYL-77-1 | K20-WYL | D11-WYL | | |
| SUM 368 | W | WPF-2-1 | K10-WPF | | | |
| SV 3300 | W | WT-550-1 | K10-WAT | D10-WAT | 49-816 | 49-812 |
| SV 34 | W | WT-399-1 | K20-WAT | D10-WAT | 49-831 | 49-812 |
| SV 38 | W | WT-399-1 | K20-WAT | D10-WAT | 49-831 | 49-812 |
| SV 3810 | W | WT-593-1 | K20-WAT | K10-WAT | 49-831 | |
| SV 4310 D | W | WT-593-1 | K20-WAT | K10-WAT | 49-831 | |
| SW 162 | W | WY-48-1 | K10-WY | D10-WY | 49-875 | 49-839 |
| SW 163 | W | WY-65-1 | K10-WY | D10-WY | 49-875 | 49-839 |
| SW 163 H | W | WY-71-1 | K10-WY | D10-WY | 49-875 | 49-839 |
| SW 163 H | W | WY-65-1 | K10-WY | D10-WY | 49-875 | 49-839 |
| SW 21 | W | WYK-7-1 | K20-WYK | D20-WYK | | |
| SW 2200 | W | WYK-87-1 | K21-WYK | D13-WYK | | |
| SW 2200 | W | WYK-77-1 | K21-WYK | D21-WYK | | |
| SW 24 | W | WYK-49-1 | K21-WYK | D21-WYK | | |
| SW 2400 | W | WYK-88-1 | K21-WYK | D13-WYK | | |
| SW 2400 | W | WYK-77-1 | K21-WYK | D21-WYK | | |
| SW 2700 | W | WYK-90-1 | K21-WYK | D13-WYK | | |
| SW 2800 | W | WYK-131-1 | K21-WYK | D21-WYK | | |
| SW 3000 | W | WYK-90-1 | K21-WYK | D13-WYK | | |
| SW 3200 | W | WYK-135-1 | K21-WYK | D21-WYK | | |
| T 202 | W | WA-110-1 | K10-WAT | D10-WAT | 49-816 | 49-812 |
| T 232 M | W | WA-153-1 | K10-WAT | D10-WAT | 49-816 | 49-812 |
| T 322 | W | WA-127-1 | K10-WAT | D10-WAT | 49-816 | 49-812 |
| TAC 2300 | W | WT-216-1 | K10-WAT | D10-WAT | 49-816 | 49-812 |
| TBC 160 | W | WY-5-1 | K10-WY | D10-WY | 49-875 | 49-839 |
| TBC 160 | W | WA-110-1 | K10-WAT | D10-WAT | 49-816 | 49-812 |
| TBC 162 | W | WA-110-1 | K10-WAT | D10-WAT | 49-816 | 49-812 |
| TBC 2000 | W | WYJ-12-1 | K20-WYJ | D20-WYJ | 49-882 | |
| TBC 202 | W | WY-6-1 | K10-WY | D10-WY | 49-875 | 49-839 |
| TBC 215 | W | WA-134-1 | K10-WAT | D10-WAT | 49-816 | 49-812 |
| TBC 220 | W | WY-45-1 | K10-WY | D10-WY | 49-875 | 49-839 |
| TBC 220 | W | WY-53-1 | K10-WY | D10-WY | 49-875 | 49-839 |

CARB = Original OEM Carburetor

**B** = Bing
**N** = Nikki
**T** = Tillotson
**TK** = Teiki
**W** = Walbro
**Z** = Zama

*** No model information available

| OEM ENGINE/UNIT | | WALBRO CARBURETOR | | | OREGON | |
|---|---|---|---|---|---|---|
| Model | Carb | № | Kit | Gaskets | Kit | Gaskets |
| **Tanaka** | | | | | | |
| TBC 220 | W | WYJ-88-1 | K20-WYJ | D20-WYJ | 49-882 | |
| TBC 220 | W | WYJ-8-1 | K20-WYJ | D20-WYJ | 49-882 | |
| TBC 220 | W | WZ-34-1 | K10-WZ | D10-WZ | 49-877 | 49-848 |
| TBC 221 | W | WYJ-55-1 | K20-WYJ | D20-WYJ | 49-882 | |
| TBC 221 | W | WYJ-56-1 | K20-WYJ | D20-WYJ | 49-882 | |
| TBC 232 | W | WA-12-1 | K10-WAT | D10-WAT | 49-816 | 49-812 |
| TBC 240 | W | WY-47-1 | K10-WY | D10-WY | 49-875 | 49-839 |
| TBC 240 | W | WYJ-10-1 | K20-WYJ | D20-WYJ | 49-882 | |
| TBC 241 | W | WPF-3-1 | K10-WPF | | | |
| TBC 250 | W | WYJ-33-1 | K20-WYJ | D20-WYJ | 49-882 | |
| TBC 250 | W | WYJ-86-1 | K20-WYJ | D20-WYJ | 49-882 | |
| TBC 262 | W | WA-164-1 | K10-WAT | D10-WAT | 49-816 | 49-812 |
| TBC 265 | W | WY-49-1 | K10-WY | D10-WY | 49-875 | 49-839 |
| TBC 265 | W | WYJ-5-1 | K20-WYJ | D20-WYJ | 49-882 | |
| TBC 265 | W | WYJ-34-1 | K20-WYJ | D20-WYJ | 49-882 | |
| TBC 300 | W | WYJ-45-1 | K20-WYJ | D20-WYJ | 49-882 | |
| TBC 322 | W | WA-127-1 | K10-WAT | D10-WAT | 49-816 | 49-812 |
| TBC 355 | W | WT-142-1 | K10-WAT | D10-WAT | 49-816 | 49-812 |
| TBC 4000 | W | WYL-9-1 | K20-WYJ | D11-WYJ | 49-882 | |
| TBC 4110 | W | WYJ-133-1 | K20-WYJ | D20-WYJ | 49-882 | |
| TBC 422 C | W | HDA-114-1 | K20-HDA | D10-HDA | 49-845 | |
| TBC 440 | W | WYJ-133-1 | K20-WYJ | D20-WYJ | 49-882 | |
| TBC 440 | W | WYJ-97-1 | K20-WYJ | D20-WYJ | 49-882 | |
| TBC 4500 | W | WYL-9-1 | K20-WYL | D11-WYL | | |
| TBC 4501 | W | WYL-17-1 | K20-WYL | D11-WYL | | |
| TBC 500 | W | HDA-97-1 | K12-HDA | D11-HDA | | |
| TBC 5000 | W | WY-56-1 | K10-WY | D10-WY | 49-875 | 49-839 |
| TBC 5000 | W | WYJ-11-1 | K20-WYJ | D20-WYJ | 49-882 | |
| TBC 5000 | W | WYJ-20-1 | K20-WYJ | D20-WYJ | 49-882 | |
| TBE 265 | W | WYJ-3-1 | K20-WYJ | D20-WYJ | 49-882 | |
| TBL 4600 | W | WYJ-107-1 | K20-WYJ | D20-WYJ | 49-882 | |
| TBL 4600 | W | WYJ-132-1 | K20-WYJ | D20-WYJ | 49-882 | |
| TBL 500 | W | HDA-51-1 | K12-HDA | D11-HDA | | |
| TC 101 | W | WPF-7-1 | K10-WPF | | | |
| TC 202 | W | WY-5-1 | K10-WY | D10-WY | 49-875 | 49-839 |
| TC 212 | W | WY-6-1 | K10-WY | D10-WY | 49-875 | 49-839 |
| TC 212 AJ | W | WY-42-1 | K10-WY | D10-WY | 49-875 | 49-839 |
| TC 212 AJ | W | WY-68-1 | K10-WY | D10-WY | 49-875 | 49-839 |
| TC 215 | W | WA-195-1 | K10-WAT | D10-WAT | 49-816 | 49-812 |
| TC 215 | W | WA-134-1 | K10-WAT | D10-WAT | 49-816 | 49-812 |
| TC 219 | W | WY-8-1 | K10-WY | D10-WY | 49-875 | 49-839 |
| TC 219 | W | WY-9-1 | K10-WY | D10-WY | 49-875 | 49-839 |
| TC 220 | W | WYJ-156-1 | K20-WYJ | D20-WYJ | 49-882 | |
| TC 2200 | W | WYL-52-1 | K20-WYL | D11-WYL | | |
| TC 2200 | W | WYL-120-1 | K20-WYL | D11-WYL | | |
| TC 2200 | W | WYL-101-1 | K20-WYL | D11-WYL | | |
| TC 2200 | W | WYL-112-1 | K20-WYL | D11-WYL | | |
| TC 2200 | W | WYL-81-1 | K20-WYL | D11-WYL | | |
| TC 2211 | W | WYL-87-1 | K20-WYL | D11-WYL | | |
| TC 2211 | W | WYL-93-1 | K20-WYL | D11-WYL | | |
| TC 2211 | W | WYL-95-1 | K20-WYL | D11-WYL | | |
| TC 2211 | W | WYL-45-1 | K20-WYL | D11-WYL | | |
| TC 2211 | W | WYL-121-1 | K20-WYL | D11-WYL | | |
| TC 2390 | W | WYL-112-1 | K20-WYL | D11-WYL | | |
| TC 2390 | W | WYL-120-1 | K20-WYL | D11-WYL | | |
| TC 2390 | W | WYL-52-1 | K20-WYL | D11-WYL | | |
| TC 2400 | W | WYL-164-1 | K20-WYL | D11-WYL | | |
| TC 2400 | W | WYL-138-1 | K20-WYL | D11-WYL | | |
| TC 2400 | W | WYL-85-1 | K20-WYL | D11-WYL | | |
| TC 2400 | W | WYL-45-1 | K20-WYL | D11-WYL | | |
| TC 241 | W | WPF-7-1 | K10-WPF | | | |
| TC 250 | W | WYJ-64-1 | K20-WYJ | D20-WYJ | 49-882 | |
| TC 250 | W | WYJ-148-1 | K20-WYJ | D20-WYJ | 49-882 | |
| TC 250 | W | WYJ-213-1 | K20-WYJ | D20-WYJ | 49-882 | |
| TC 250 | W | WYJ-189-1 | K20-WYJ | D20-WYJ | 49-882 | |
| TC 250 | W | WYJ-189-1 | K20-WYJ | D20-WYJ | 49-882 | |
| TC 250 B | W | WYJ-262-1 | K10-WYJ | D20-WYJ | | |
| TC 250 B | W | WYJ-225-1 | K20-WYJ | D20-WYJ | 49-882 | |
| TC 2501 | W | WYL-149-1 | K20-WYL | D11-WYL | | |
| TC 2501 | W | WYJ-296-1 | K20-WYJ | D20-WYJ | 49-882 | |
| TC 262 | W | WYJ-203-1 | K20-WYJ | D20-WYJ | 49-882 | |
| TC 262 | W | WYJ-197-1 | K20-WYJ | D20-WYJ | 49-882 | |
| TC 300 | W | WYJ-102-1 | K20-WYJ | D20-WYJ | 49-882 | |
| TC 300 | W | WYJ-216-1 | K20-WYJ | D20-WYJ | 49-882 | |
| TC 300 | W | WYJ-230-1 | K20-WYJ | D20-WYJ | 49-882 | |
| TC 312 | W | WYJ-112-1 | K20-WYJ | D20-WYJ | 49-882 | |
| TC 312 | W | WYJ-159-1 | K20-WYJ | D20-WYJ | 49-882 | |
| TC 312 | W | WYJ-206-1 | K20-WYJ | D20-WYJ | 49-882 | |
| TC 312 K | W | WT-198-1 | K10-WAT | D10-WAT | 49-816 | 49-812 |
| TC 3200 | W | WYJ-292-1 | K20-WYJ | D20-WYJ | 49-882 | |

C

# Carburetor Kit Application Chart

| OEM ENGINE/UNIT | | WALBRO CARBURETOR | | | OREGON | |
|---|---|---|---|---|---|---|
| Model | Carb | № | Kit | Gaskets | Kit | Gaskets |
| **Tanaka** | | | | | | |
| TC 355 | W | WT-142-1 | K10-WAT | D10-WAT | 49-816 | 49-812 |
| TC 355 | W | WYJ-112-1 | K20-WYJ | D20-WYJ | 49-882 | |
| TC 40 | W | HDA-44-1 | K12-HDA | D11-HDA | | |
| TC 4000 | W | WYL-65-1 | K20-WYL | D11-WYL | | |
| TC 4200 | W | WYJ-168-1 | K20-WYJ | D20-WYJ | 49-882 | |
| TC 4200 | W | WYK-85-1 | K21-WYK | D13-WYK | | |
| TC 4210 | W | WYJ-224-1 | K20-WYJ | D20-WYJ | 49-882 | |
| TC 432 | W | WYJ-164-1 | K20-WYJ | D20-WYJ | 49-882 | |
| TC 432 | W | WYJ-107-1 | K20-WYJ | D20-WYJ | 49-882 | |
| TC 432 | W | WYJ-307-1 | K20-WYJ | D20-WYJ | 49-882 | |
| TC 4500 | W | WYL-94-1 | K20-WYL | D11-WYL | | |
| TC 4501 N | W | WYL-49-1 | K20-WYL | D11-WYL | | |
| TC 4501 N | W | WYL-66-1 | K20-WYL | D11-WYL | | |
| TC 455 | W | HDA-51-1 | K12-HDA | D11-HDA | | |
| TC 47 | W | HDA-180-1 | K22-HDA | D22-HDA | 49-853 | 49-852 |
| TC 47 FN | W | HDA-133-1 | K20-HDA | D10-HDA | 49-845 | |
| TC-2211 | W | WYL-121-1 | K20-WYL | D11-WYL | | |
| TCA 250 | W | WYJ-126-1 | K20-WYJ | D20-WYJ | 49-882 | |
| TCA 500 | W | HDA-184-1 | K20-HDA | D20-HDA | 49-845 | 49-835 |
| TCP 210 | W | WYL-16-1 | K20-WYL | D11-WYL | | |
| TCP 25 | W | WYL-20-1 | K20-WYL | D11-WYL | | |
| TCS 3401 | W | WT-551-1 | K10-WAT | D10-WAT | 49-816 | 49-812 |
| TCS 3401 | W | WT-553-1 | K20-WAT | D20-WAT | 49-831 | 49-844 |
| TCS-2800 | W | WT-797-1 | K10-WAT | D10-WAT | 49-816 | 49-812 |
| TCS-2800 | W | WT-799-1 | K10-WAT | D10-WAT | 49-816 | 49-812 |
| TEA 500 | W | HDA-43-1 | K20-HDA | D10-HDA | 49-845 | |
| TED 210 | W | WYL-14-1 | K20-WYL | D11-WYL | | |
| TED 210 | W | WYL-30-1 | K20-WYL | D11-WYL | | |
| TED 210 | W | WYL-71-1 | K20-WYL | D11-WYL | | |
| TED 23 | W | WA-12-1 | K10-WAT | D10-WAT | 49-816 | 49-812 |
| TED 232 | W | WA-12-1 | K10-WAT | D10-WAT | 49-816 | 49-812 |
| TED 260 | W | WA-183-1 | K10-WAT | D10-WAT | 49-816 | 49-812 |
| TED 265 | W | WA-183-1 | K10-WAT | D10-WAT | 49-816 | 49-812 |
| TF 250 | W | WB-29-1 | K10-WB | D10-WB | 49-872 | 49-869 |
| THB 2500 | W | WYJ-166-1 | K20-WYJ | D20-WYJ | 49-882 | |
| THB 300 | W | WY-15-1 | K10-WY | D10-WY | 49-875 | 49-839 |
| THT 16 | W | WA-110-1 | K10-WAT | D10-WAT | 49-816 | 49-812 |
| THT 162 | W | WA-110-1 | K10-WAT | D10-WAT | 49-816 | 49-812 |
| THT 200 | W | WY-9-1 | K10-WY | D10-WY | 49-875 | 49-839 |
| THT 210 | W | WYL-14-1 | K20-WYL | D11-WYL | | |
| THT 210 | W | WYL-71-1 | K20-WYL | D11-WYL | | |
| THT 210 A | W | WYL-46-1 | K20-WYL | D11-WYL | | |
| THT 212 | W | WY-8-1 | K10-WY | D10-WY | 49-875 | 49-839 |
| THT 230 | W | WY-8-1 | K10-WY | D10-WY | 49-875 | 49-839 |
| THT 232 | W | WA-12-1 | K10-WAT | D10-WAT | 49-816 | 49-812 |
| THT 262 | W | WA-164-1 | K10-WAT | D10-WAT | 49-816 | 49-812 |
| TIA 30 | W | WA-118-1 | K10-WAT | D10-WAT | 49-816 | 49-812 |
| TIA 302 | W | WA-118-1 | K10-WAT | D10-WAT | 49-816 | 49-812 |
| TIA 305 | W | WA-118-1 | K10-WAT | D10-WAT | 49-816 | 49-812 |
| TLE 550 | W | HDA-178-1 | K22-HDA | D22-HDA | 49-853 | 49-852 |
| TLE 550 | W | HDA-58-1 | K20-HDA | D10-HDA | 49-845 | |
| TM 24 PSE | W | WYK-6-1 | K20-WYK | D20-WYK | | |
| TM 250 | W | WYJ-210-1 | K20-WYJ | D20-WYJ | 49-882 | |
| TS 2048 | W | WYL-15-1 | K20-WYL | D11-WYL | | |
| TS 2050 | W | WYL-15-1 | K20-WYL | D11-WYL | | |
| TST 218 | W | WY-54-1 | K10-WY | D10-WY | 49-875 | 49-839 |
| TST 218 | W | WYJ-6-1 | K20-WYJ | D20-WYJ | 49-882 | |
| TX 20 | W | WA-208-1 | K10-WAT | D10-WAT | 49-816 | 49-812 |
| TY 250 | W | WB-39-1 | K10-WB | D10-WB | 49-872 | 49-869 |
| TY 250 | W | WB-36-1 | K10-WB | D10-WB | 49-872 | 49-869 |
| **Technic Tool** | | | | | | |
| Power Pruner | Z | C1U-M16 | RB-28 | GND-18 | 49-866 | |
| **Tecumseh** | | | | | | |
| *** | W | LME-34-1 | K1-LMEG | G-LM | | |
| *** | W | LME-36-1 | K2-LMEG | G-LM | | |
| *** | W | LME-37-1 | K2-LMEG | G-LM | | |
| *** | W | LME-42-1 | K2-LMEG | G-LM | | |
| OH 120 | W | WHG-28-1 | K1-WHG | | | |
| OH 120 | W | WHG-27-1 | K1-WHG | | | |
| OH 140 | W | WHG-25-1 | K1-WHG | | | |
| OH 140 | W | WHG-26-1 | K1-WHG | | | |
| OH 160 | W | WHG-16-1 | K1-WHG | | | |
| OH 160 | W | WHG-17-1 | K1-WHG | | | |
| OH 180 | W | WHG-16-1 | K1-WHG | | | |

| OEM ENGINE/UNIT | | WALBRO CARBURETOR | | | OREGON | |
|---|---|---|---|---|---|---|
| Model | Carb | № | Kit | Gaskets | Kit | Gaskets |
| **Tecumseh** | | | | | | |
| OH 180 | W | WHG-17-1 | K1-WHG | | | |
| TC 200 | W | WTA-15-1 | | | | |
| TC 200 | W | WTA-3-1 | | | | |
| TC 300 | W | WTA-14-1 | | | | |
| TEC 1525 | W | LMK-26-1 | K10-LMK | | | |
| **Tohatsu** | | | | | | |
| MP 472 | W | WB-37-1 | K10-WB | D10-WB | 49-872 | 49-869 |
| 470 | W | WB-31-1 | K10-WB | D10-WB | 49-872 | 49-869 |
| **Topso** | | | | | | |
| E 500 AV | W | WS-24-1 | K10-WS | D10-WS | | 49-814 |
| E 501 AV | W | WJ-11-1 | K11-WJ | D11-WJ | | |
| E 511 AV | W | WJ-11-1 | K11-WJ | D11-WJ | | |
| E 600 AV | W | WS-24-1 | K10-WS | D10-WS | | 49-814 |
| E 601 AV | W | WJ-11-1 | K11-WJ | D11-WJ | | |
| E 611 AVB | W | WJ-11-1 | K11-WJ | D11-WJ | | |
| E 700 AV | W | WJ-11-1 | K11-WJ | D11-WJ | | |
| E 710 AVB | W | WJ-11-1 | K11-WJ | D11-WJ | | |
| **Toro** | | | | | | |
| Trimmers | Z | C1U-M16 | RB-28 | GND-18 | 49-866 | |
| S1620 | Z | C1U-P6 | RB-29 | GND-18 | 49-285 | |
| F-SERIES | W | WYC-7-1 | K10-WYC | D10-WYC | | |
| **Trim-Rite** | | | | | | |
| TC 14 | W | WA-120-1 | K10-WAT | D10-WAT | 49-816 | 49-812 |
| TC 21 T | W | WA-120-1 | K10-WAT | D10-WAT | 49-816 | 49-812 |
| TC 21 TA | W | WT-14-1 | K20-WAT | D10-WAT | 49-831 | 49-812 |
| TR-2217C | Z | C1U-M16 | RB-28 | GND-18 | 49-866 | |
| **Turfpower** | | | | | | |
| 280TP | Z | C1U-P6 | RB-29 | GND-18 | 49-285 | |
| 310BVTP | Z | C1U-P6 | RB-29 | GND-18 | 49-285 | |
| 780TP | Z | C1U-P7 | RB-29 | GND-18 | 49-285 | |
| LIMITCAPMODELS | Z | C1U-P10 | RB-29 | GND-18 | 49-285 | |
| LIMITCAPMODELS | Z | C1U-P11 | RB-29 | GND-18 | 49-285 | |
| **Wisconsin** | | | | | | |
| AENL | W | WHL-19-1 | K1-WHL | | | |
| S 14D | W | WHG-31-1 | K1-WHG | | | |
| W2 1235 | W | WHG-18-1 | K1-WHG | | | |
| W2 1235 [V2] | W | WHG-96-1 | K1-WHG | | | |
| W2 1250 | W | WHG-18-1 | K1-WHG | | | |
| W2 1250 [V2] | W | WHG-96-1 | K1-WHG | | | |
| W2 880 | W | WHG-53-1 | K1-WHG | | | |
| **Yanmar** | | | | | | |
| BRUSH CUTTER | Z | C1Q-SK8 | RB-68 | GND-17 | | 49-880 |
| B.C/S.T. | Z | C1Q-SK10 | RB-68 | GND-17 | | 49-880 |
| **Yamaha** | | | | | | |
| OP78 | W | WT209-1 | K20-WAT | D10-WAT | 49-831 | 49-812 |
| OP78 | W | WT-47-1 | K10-WAT | D10-WAT | 49-816 | 49-812 |

CARB = Original OEM Carburetor

**B** = Bing
**N** = Nikki
**T** = Tillotson
**TK** = Teiki
**W** = Walbro
**Z** = Zama

*** No model information available

C

## Max Torque Clutches

"SS" Type Automatic Clutch for 4-Cycle Engines.
Six sintered-metal shoes engage at 2000 RPM. Stainless steel garter spring, works clockwise or counterclockwise, oilite bearings for long life. Works in oil, dirt and water with proper maintenance. 3/16" Keyway and Allen set screws included.

| OREGON | Teeth | Chain Size | Bore | Product Code |
|---|---|---|---|---|
| 84-004 | 12 | #35 | 3/4" | |
| 84-002 | 11 | #35 | 5/8" | |
| 84-011 | 12 | #35 | 5/8" | |
| 84-001 | 10 | #41 | 3/4" | |
| 84-007 | 10 | #41 | 5/8" | |

## Pulley Clutches - 3/4" Shaft

Diameter: 4-1/2"

| OREGON | Pulley Dia. | **Belt** Size | Bore | Product Code |
|---|---|---|---|---|
| 84-009 | 3.2" | A & B | 5/8" | |
| 84-006 | 3.2" | 1/2" | 3/4" | |

## Brister Clutches - 3/4" Shaft

Special lube system keeps clutch lubricated, includes grease zerk.

| OREGON | Teeth | Chain Size | Bore | Product Code |
|---|---|---|---|---|
| 84-013 | 10 | #41 | 3/4" | |
| 84-012 | 12 | #35 | 3/4" | |

## Max Torque Clutches

| OREGON | Teeth | Chain Size | Bore | Product Code |
|---|---|---|---|---|
| 84-008 | 10 | #41 | 3/4" | |
| 84-005 | 12 | #35 | 3/4" | |
| 45-634 | **Bearing Only** – OD: 1", for clutches with 3/4" bore. Use with Oregon® 84-004, 84-001, 84-013, & 84-012 | | | |

## Torque Converter – Replacement Parts

| OREGON | OEM Number | Product Code |
|---|---|---|

### Belts

| | | |
|---|---|---|
| 84-027 | **Comet # 203589A**<br>Replacement belt for Oregon 84-026 torque converter. 3/4" x 27-3/8" | |
| 84-028 | **Max Torque # TCBLT**<br>Torque converter belt for Max Torque torque converters. 3/4" x 29-9/32" | |
| 84-029 | **Max Torque # TCBLTL**<br>Torque converter belt for Max Torque torque converters, long version. 3/4" x 29-21/32" | |

### Drive Pulley's

| | | |
|---|---|---|
| 84-030 | **Max Torque # TCDNS34**<br>Drive pulley for Max Torque torque converter. Symetrical, bore: 3/4" | |
| 84-031 | **Max Torque # TCDRS34**<br>Torque converter driver pulley for Max Torque torque converters, symmetrical, 3/4" bore. | |

84-028

84-030

84-029

84-031

C

# Chain Roller Parts

## Single Strand Roller Chain – 10 Ft. Lengths

| OREGON | Size | Dimensions | Product Code |
|---|---|---|---|
| 32-100 | #25 | 1/4 x 1/8 | |
| 32-101 | #35 | 3/8 x 3/16 | |
| 32-105 | #40 | 1/2 x 5/16 | |
| 32-107 | #41 | 1/2 x 1/4 | |
| 32-111 | #42/45 | 1/2 x 3/16 | |
| 32-112 | #43/65 | 1/2 x 1/8 | |
| 32-114 | #50 | 5/8 x 3/8 | |
| 32-116* | #60 | 3/4 x 1/2 | |
| 32-110 | #420 | 1/2 x 1/4 | |

*For agricultural machinery

## Connecting Links

| OREGON | Size | Product Code |
|---|---|---|
| 02-187 | #25 | |
| 02-188 | #35 | |
| 02-190 | #40 | |
| 02-191 | #41 | |
| 02-192 | #42 | |
| 02-194 | #43 | |
| 02-195 | #50 | |
| 02-196* | #60 | |
| 02-193 | #420 | |

*For agricultural machinery

## Single Strand Roller Chain – 100 Ft. Lengths

| OREGON | Size | Dimensions | Product Code |
|---|---|---|---|
| 32-103 | #35 | 3/8 x 3/16 | |
| 32-106 | #40 | 1/2 x 5/16 | |
| 32-108 | #41 | 1/2 x 1/4 | |

## Offset Links

| OREGON | Size | Product Code |
|---|---|---|
| 02-175 | #25 | |
| 02-176 | #35 | |
| 02-177 | #40 | |
| 02-178 | #41 | |
| 02-179 | #42 | |
| 02-180 | #43 | |
| 02-182 | #50 | |
| 02-184* | #60 | |
| 02-181 | #420 | |

*For agricultural machinery

## Chain Repair

| OREGON | Dimensions | Product Code |
|---|---|---|
| 42-430-0 | Chain Detacher Complete Tool | |
| 42-432-0 | Chain Detacher Complete Tool<br>Hardened tip, uses #60 through #100 chain | |
| 42-434-0 | Chain Holder<br>For #35 through #60 chain | |

42-430-0

42-432-0

42-434-0

C

## Screnches

| | Driver Type: | ⊖ | ⊖ | ⊖ | ⊖ | ⊖ | ⊖ | ✱ | ⊖ | ⊖ | ⊖ | ⊖ |
|---|---|---|---|---|---|---|---|---|---|---|---|---|
| Dimensions (mm) | S1 x S2 | 13 x 19 | 13 x 19 | 13 x 19 | 19 x 10 | 16 x 13 | 19 x 17 | 19 | 19 x 14 | 21 x 17 | 15 x 19 | 16 x 11 |
| | A1 | 25 | 21 | 33 | 35 | 35 | 27 | 12 | 35 | 30 | 28 | 40 |
| | L2 | 175 | 177 | 171 | 172 | 172 | 177 | 177 | 175 | 172 | 177 | 177 |
| | L1 | 52 | 44 | 68 | 70 | 72 | 57 | 51 | 70 | 60 | 56 | 80 |
| **Oregon® №:** | | **57-005** | **57-017** | **57-016** | **57-003** | **57-002** | **57-008** | **57-019** | **57-006** | **57-010** | **57-014** | **57-001** |
| Dolmar | | | ✓ | | | | ✓ | | | | | |
| Echo | | | ✓ | ✓ | ✓ | | | | ✓ | | | |
| Homelite | | | | | | | | | | | | ✓ |
| Husqvarna | | ✓ | ✓ | ✓ | | ✓ | | | | | | |
| John Deere | | | | ✓ | ✓ | ✓ | | | ✓ | | | |
| Jonsered | | ✓ | ✓ | | | ✓ | | | | | ✓ | |
| McCulloch | | ✓ | | | | | | | | | | ✓ |
| Efco / Oleo-Mac | | | | ✓ | ✓ | | ✓ | | | | | |
| Partner | | ✓ | ✓ | | | ✓ | | | | | | |
| Pioneer | | | | | | | | | ✓ | | | |
| Poulan | | | ✓ | | | | | | ✓ | | ✓ | |
| Shindaiwa | | ✓ | ✓ | | ✓ | | | | | | | |
| Stihl | | | ✓ | ✓ | | | ✓ | ✓ | | ✓ | | |

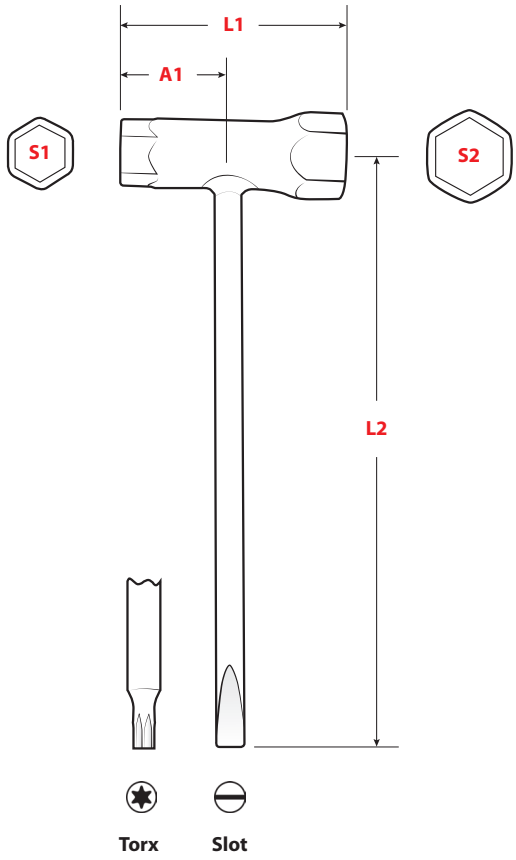


C

# Chainsaw & Cut-Off Saw Parts

| OREGON | Replaces | Description | Product Code |
|---|---|---|---|

## Air Filters

| | | | |
|---|---|---|---|
| **30-618** | Echo 130310-39730 | **Air Filter** - NEW<br>Fits Echo CS3500, CS4200, & CS420<br>Height: 2-1/4", outer diameter: 2-1/2", inner diameter: 1-3/4" | |
| **30-621** | Echo A226-000291<br>Echo CS350TES | **Air Filter** - NEW | |
| **30-625** | Echo 13031038331 | **Air Filter** - NEW<br>Fits Echo CS440, CS4400, CS450, CS510, CS520, & CS530<br>Height: 1-3/8", outer diameter: 2-1/2", inner diameter: 1-3/4" | |
| **30-620** | Echo P021-016371 | **Air Filter** - NEW<br>Fits Echo CS600 | |
| **30-619** | Echo A226-000070 | **Air Filter** - NEW<br>Fits Echo CS6702 & CS680S | |
| **55-207** | Homelite A65178 | **Air Filter – Felt**<br>For chainsaws<br>Fits EZ-Automatic<br>Length: 4", width: 2-7/8" | |
| **55-211** | Homelite 63589-A | **Air Filter**<br>For chainsaws<br>Fits models SXL, XL12, XL15,<br>XL400, XL500, & UT10618A<br>Length: 4", width: 3-1/2" | |
| **55-610** | Homelite 69141<br>Homelite D92702B<br>Homelite A24779 | **Foam Air Filter**<br>Fits models Super 2, XL2, XL,<br>CSB3012, & LX30 Bandit<br>Diameter: 1-7/8", thickness: 1/2"<br>Pre-oiled foam air filter - (Previously 55-228) | |
| **30-124** | Husqvarna 503 44 72-03 | **Air Filter**<br>Fits 261, 262, 268, 272, & 394 chainsaws | |
| **30-148** | Husqvarna 501 80 71-05 | **Air Filter**<br>Fits 61, 66, 266, 281, & 288 chainsaws | |

C

| OREGON | Replaces | Description | Product Code |
|---|---|---|---|

## Air Filters

| | | | |
|---|---|---|---|
| **30-622** | Husqvarna 505126306 | **Air Filter** - NEW<br>Fits Husqvarna 555, 560XP, CS2258, & CS2260<br>Length: 3", width: 2-1/2", height: 1-3/8" | |
| **30-623** | Husqvarna 522675003 | **Air Filter** - NEW<br>Fits Husqvarna 562XP<br>Length: 3-1/8", width: 2-9/16", height: 2-1/2" | |
| **30-634** | Husqvarna 544 08 08-02 | **Air Filter** - NEW<br>Fits Husqvarna 445, 445E, 450, & 450E chainsaw | |
| **30-631** | Husqvarna 544181602 | **Air Filter** - NEW<br>Fits Husqvarna K750<br>Length: 5", width: 4-1/2", height: 1-3/8" | 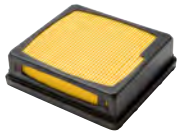 |
| **30-627** | Husqvarna 544181602 | **Air Filter** - NEW<br>Fits Husqvarna K760<br>Length: 4-7/8", width: 4-1/2", height: 2-1/2" | |
| **30-645** | Husqvarna, 503 81 45-01 | **Air Filter** - NEW<br>Fits Husqvarna 362, 362EPA, 362 Special, 362XP, 365, 365EPA, 365 Special, 365 Special EPA, 371, 371EPA, 372, 372EPA, & 372XPW chainsaws | |
| **30-641** | Husqvarna 530029811 | **Air Filter** - NEW<br>Fits Husqvarna 36, 41, 136, 137, 141, & 142 chainsaws<br>Length: 3-1/8", width: 2-11/16", height: 7/8" | |
| **30-630** | Husqvarna 575269103 | **Air Filter** - NEW<br>Fits Husqvarna 362, 365, 371, & 372<br>Length: 3-1/2", width: 2-7/8" | |
| **30-637** | Husqvarna 501 80 71-05 | **Air Filter** - NEW<br>Fits Husqvarna 61, 181, 266, 281, & 288 | |
| **30-633** | Husqvarna 537024003 | **Air Filter** - NEW<br>Fits Husqvarna 340, 345, 346 XP, 350, 351, & 353 chainsaws | |

C

# Chainsaw & Cut-Off Saw Parts

| OREGON | Replaces | Description | Product Code | |
|---|---|---|---|---|

## Air Filters

| | | | | |
|---|---|---|---|---|
| **30-648** | Husqvarna 503 89 82-01 | **Air Filter** - NEW<br>Fits Husqvarna 51/55<br>Length: 4", width: 3-1/2", height: 2" | | |
| **55-218** | McCulloch 214224<br>McCulloch 61460<br>McCulloch 216905 | **Air Filter**<br>For chainsaws<br>Fits 110, 120, 130, & Eager Beaver<br>Diameter: 2", thickness: 7/8" | | |
| **55-212** | McCulloch 69922<br>McCulloch 92420 | **Air Filter**<br>For chainsaws<br>Fits 10-10<br>Length: 4-3/8", width: 4-1/4" | | |
| **55-214** | McCulloch 95213<br>McCulloch 214226 | **Air Filter**<br>For chainsaws<br>Fits 600 & Eager Beaver 3.7<br>Length: 4-3/8", width: 4-1/4" | | 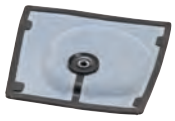 |
| **30-836** | | **Shop Pack** - 5 of 30-066 | | |
| **30-149** | Partner 506-23-18-02 | **Air Filter**<br>Fits K950 & K1250 active cut-off saws<br>Length: 6", width: 4-1/4", height: 2-5/8" | | |
| **55-226** | Poulan 24548 | **Air Filter**<br>For chainsaws<br>Fits 3400 & 3700<br>Length: 3-7/8", width: 2-5/8", height: 1" | | |
| **55-515** | Poulan 530-37793 | **Foam Air Filter**<br>Fits gas chainsaw models 1950, 2050, 2075, 210, 2150, 2175, 2250, 230, 2450, 2550, & 260<br>Pre-oiled air filter | | |
| **55-612** | Pouan 23369 | **Foam Air Filter**<br>For chainsaws<br>Fits model 25<br>Length: 3-3/8", width: 1-5/8", height: 1-1/4"<br>Pre-oiled foam - (Previously Oregon® 55-223) | | |
| **55-613** | Poulan 23791 | **Foam Air Filter**<br>For chainsaws<br>Fits model MICRO XXV, 18, 20, & 2300<br>Length: 2-5/8", width: 1-1/2", height: 1"<br>Pre-oiled foam - (Previously Oregon 55-224) | | |

C

## Air Filters

| OREGON | Replaces | Description | Product Code | |
|---|---|---|---|---|
| 30-719 | Shindaiwa 38010-82581 | **Air Filter**<br>Fits EC7500 & EC7600 cut-off saws<br>Includes foam pre-filter<br>Length: 7", width: 4", height: 2" | | |
| 30-636 | Stihl 1127 120 1621 | **Air Filter** - NEW<br>Fits Stihl 029, 039, MS290, & MS310<br>Length: 4-5/8", width: 1-1/2", height: 2-5/8" | | |
| 30-642 | Stihl 1123 120 1612 | **Air Filter** - NEW<br>Fits Stihl MS210, MS230, & MS250 | | |
| 30-639 | Stihl 1125 120 1626 | **Air Filter** - NEW<br>Fits Stihl 034, 036, MS340, & MS360 | | |
| 30-646 | Stihl 1119-120-1610 | **Air Filter** - NEW<br>Fits Stihl 038, C44-50, & MS380 | | |
| 30-632 | Stihl 1135 120 1600 | **Air Filter** - NEW<br>Fits Stihl MS341 & MS361<br>Length: 4-5/8", width: 2-13/16", height: 1-11/16" | | |
| 30-628 | Stihl 4224-141-0300 | **Air Filter** - NEW<br>Stihl TS700 & TS800<br>Length: 5-1/2" | | |
| 30-653 | Stihl 0000-141-0300 | **Pre-Air Filter, Heavy Duty** - NEW<br>Fits Stihl 044, 046, 064, 066, 084, 088, MS440, MS441, MS460, MS640, MS650, MS660, MS780, & MS880 | | |
| 30-215 | Stihl 1118 120 1611 | **Air Filter** - NEW<br>Fits Stihl most 028<br>Length: 3-5/8", width: 2-11/32", height: 13/16" | | |
| 30-216 | Stihl 1139 120 1601 | **Air Filter** - NEW<br>Fits MS 211, MS 211 C, MS 181, & MS 181 C | | |
| 30-218 | Stihl 1123 120 1612 | **Air Filter** - NEW<br>Fits MS 250, MS 250 C, 021, 023, 025, P 835, P 840, MS 210, MS 210 C, MS 230, & MS 230 C | | |

C

# Chainsaw & Cut-Off Saw Parts

| OREGON | Replaces | Description | Product Code |
|---|---|---|---|

## Air Filters

| | | | |
|---|---|---|---|
| **30-220** | Stihl 1140 140 4401 | **Air Filter** - NEW<br>Fits MS 201 T chainsaws<br>Length: 4-7/16", width: 3", height: 3/4" | |
| **30-223** | Stihl 4148 141 0300 | **Air Filter, Paper** - NEW<br>Fits FS 240 C, FS 240 RC, FS 260 C, FS 260 RC, FS 360 C, FS 410 C, FS 460 C, FS 460 RC | |
| **30-853** | Stihl 0000-120-1654 | **Air Filter**<br>Fits models 044, MS440, 066, MS660, 084, & 088<br>Length: 5", width: 4-1/8", height: 1-3/4"<br>3-piece kit | |
| **30-154** | 1110-120-1601 | **Air Filter**<br>For model 041 | 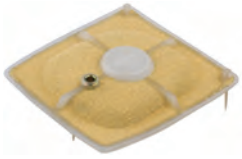 |
| **30-155** | 1120-120-1600 | **Air Filter**<br>For models 009, 010, & 011 | |
| **55-236** | Stihl 1118-120-1611 | **Air Filter**<br>Fits 028 chainsaw<br>Length: 3-1/2", width: 2-1/4", height: 3/4" | |
| **30-337** | Stihl 1121-120-1617 | **Air Filter**<br>Fits models 024, 026, MS240, & MS260 | |
| **30-156** | 1130-124-0800 | **Air Filter**<br>For models 017, 018, MS170, & MS180 | 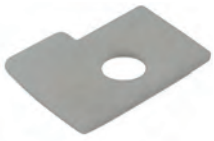 |
| **55-240** | Stihl 4201-141-0300 | **Air Filter**<br>For cut-off saws, main filter<br>Fits Quick Cut models TS350, TS360 & TS510<br>OD: 3-7/8", ID: 2-3/8", height: 2-7/8"<br>Use with Oregon® 55-241 & 55-242 | |
| **55-241** | Stihl 4201-141-0310 | **Air Filter**<br>Felt wrap with stitched elastic<br>For cut-off saws<br>Fits Quick Cut models TS350, TS360, & TS510<br>Use with Oregon 55-240 & 55-242 | |

C

| OREGON | Replaces | Description | Product Code |
|---|---|---|---|

## Air Filters

| | | | |
|---|---|---|---|
| **55-242** | Stihl 4201-140-1801 | **Inner Filter**<br>For cut-off saws<br>Fits Cut Quick models TS350, TS360, & TS510<br>Use with Oregon 55-240 & 55-241 | |
| **55-263** | | **Air Filter Kit**<br>Fits Quick Cut models TS350, TS360, & TS510 cut-off saws<br>Contains one each of Oregon 55-240, 55-241, & 55-242 | 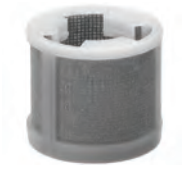 |
| **55-246** | Stihl 4221-141-0310 | **Felt Pre-Cleaner**<br>Fits TS460 cut-off saw<br>Use with Oregon 55-248 air filter & 55-243 inner filter<br>with stitched elastic for tight seal | |
| **55-243** | Stihl 4221-140-1800 | **Inner Filter**<br>Fits TS460 cut-off saw<br>OD: 2-7/8", ID: 2-11/16", height: 1-11/16"<br>Use with Oregon 55-248 & 55-246 | |
| **55-248** | Stihl 4221-140-4400 | **Air Filter, Main**<br>Fits TS460 cut-off saw<br>OD: 4-1/2", height: 2-1/4"<br>Use with Oregon 55-243 inner filter & 55-246 pre-cleaner | 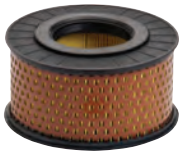 |
| **55-262** | | **Air Filter Kit**<br>Fits Quick Cut model TS460 cut-off saw<br>Contains one each of Oregon 55-243, 55-246, & 55-248 | 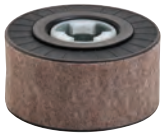 |
| **55-244** | Stihl 4223-140-1800 | **Air Filter**<br>Secondary filter, flocked screen<br>Fits TS400 cut-off saw<br>Length: 4-5/8", width: 2-3/4", height: 3/8" | |
| **30-838** | | **SHOP PACK** - 5 of 55-244 | |
| **55-249** | Stihl 4223-141-0300 | **Air Filter Panel Style**<br>Fits TS400 cut-off saw, main filter<br>Length: 5-3/8", width: 3-1/2", height: 1-15/16" | 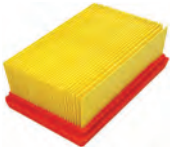 |
| **30-839** | | **SHOP PACK** - 5 of 55-249 | |
| **55-245** | Stihl 4223-141-0600 | **Pre-Filter**<br>Fits TS400 cut-off saw<br>Outer foam filter<br>Length: 4-7/8", width: 3-5/32", height: 3/4" | |

C

# Chainsaw & Cut-Off Saw Parts

| OREGON | Replaces | Description | Product Code |
|---|---|---|---|

## Air Filters

**30-153**

**Air Filter Kit**
Fits TS400 cut-off saws
Contains 1 each of Oregon® 55-245, 55-244, & 55-249

**30-333** Stihl 4238-140-4401

**Air Filter Kit**
Fits TS410 & TS420 cut-off saws
Length: 5-7/8", width: 3-7/8" (5-1/2"), height: 1-1/2"

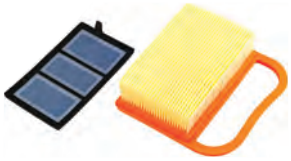

## Cut-Off Saw Belts

| OREGON | OEM No. | Size | Description | Product Code |
|---|---|---|---|---|
| 75-711 | Partner 506 03 30-31 | 3/8" x 31-1/2" | Cogged v-belt for K650 Active, K650, & K700 Active II cut-off saws | |
| 75-724 | Partner 506 07 05-03 | 3/8" x 34-1/2" | Cogged v-belt for K950 cut-off saws with 12" & 14" blades | |
| 75-713 | Partner 506 07 05-06 | 3/8" x 31-1/2" | Cogged v-belt for K650 Active III & K7000 Active III cut-off saws | |
| 75-712 | Partner 506 29 67-02 | .550" x 32" | Multi-ribbed belt for K750 cut-off saws | |
| 75-272 | Stihl 9490-000-7850 | 3/8" x 33-3/4" | Drive belt for TS350 cut-off saw | |
| 75-273 | Stihl 9490-000-7851 | 3/8" x 34-7/16" | Drive belt for TS400 cut-off saw | |

## Electrical

**55-111** Stihl 1121-430-0200

**Stop Switch**
For models 024, 026, 070, TS08, & TS350

**33-206** Universal

**Toggle Switch**
2 terminal ends

**33-207** Universal

**Toggle Switch**
1 terminal end

**33-180** Husqvarna 503 717 901

**Stop Switch**
Fits many Husqvarna models

**33-158** Husqvarna 503718201

**On/Off Switch**
For models 232L, 232R, 235FR, 235R, 324LDX, 324LX, 324RX, 326, 336, 339XPT, & 385

C

## Electrical

| OREGON | Replaces | Description | Product Code |
|---|---|---|---|
| 33-053 | Universal | **Ignition Module**<br>Fits most 2-cycle & 4-cycle engines<br>Used to replace points & condenser | |
| 33-254 | Husqvarna 544018401<br>Husqvarna 503901401 | **Ignition Coil**<br>Fits chainsaw models 51, 55, & 55 Rancher (2000–2007) | |
| 33-244 | Stihl 0000-400-1300 | **Ignition Coil**<br>Fits chainsaw models 024, 026, 028, 034, 036, 044, 046, & 048 | |
| 33-243 | Stihl 0000-400-1306<br>Stihl 0000-400-1302 | **Ignition Coil**<br>Fits chainsaw models 021, 023, & 025, & trimmer models FS 160, FS 180, & FS 220 | |
| 33-245 | Stihl 1122-400-1314 | **Ignition Coil**<br>Fits chainsaw models 046, 066, MS460, MS650, & MS660 | |
| 36-425 | Echo 159012-03433 | **Spark Plug Boot** - NEW<br>Echo CS302, CS4600, PB230, PB250, PB500, SRM230, SRM260, SRM280, SRM310, SRM2000, SRM2500, SRM3000, & SRM4600 | |
| 36-424 | Echo 159012-01620 | **Spark Plug Boot** - NEW<br>Echo CS280, CS300, CS3000, PB200, PB400, PB1000, PB2400, SRM200, SRM340, SRM1500, SRM2100, SRM2400, & SRM3100 | |
| 33-208 | Homelite A55373-A | **Spark Plug Boot**<br>5 mm for trimmers and chainsaws<br>Protects plug from moisture<br>Eliminates shock<br>Positive connection | |
| 33-204 | Husqvarna 501-485-402 | **Spark Plug Boot**<br>90 degree for chainsaw models 340, 345, 346, 350, & 351<br>Protects plug from moisture, eliminates shock, positive connection | |
| 36-427 | Makita 957-604-240 | **Spark Plug Boot** - NEW<br>Fits Makita DPC6200, DPC6201, DPC6400, DPC6401, DPC6410, DPC6411, DPC7001, DPC7300, DPC7301, DPC7310, DPC7311, DPC7321, DPC8112, DPC9500, DPC9501, DCS6401, DCS642120, DCS7301, & DCS7901 | |

C

# Chainsaw & Cut-Off Saw Parts

| OREGON | Replaces | Description | Product Code |
|---|---|---|---|

## Electrical

| | | | |
|---|---|---|---|
| **33-210** | Universal | **Spark Plug Boot**<br>Fits most spark plugs<br>Protects plug from moisture<br>Eliminates shock<br>Positive connection | |

## Fasteners

| | | | |
|---|---|---|---|
| **04-008** | Husqvarna 5032200-01 | **Bar Stud Nut**<br>8 mm | |
| **04-007** | McCulloch 110676 | **Bar Stud Nut**<br>1/4-28 for Mini Mac 600 | |
| **04-006-0** | McCulloch 120029 | **Bar Stud Nut**<br>M6.3 x 1 for Mini Mac 300 | |
| **04-009** | Stihl 000-955-0801 | **Bar Stud Nut**<br>8 mm x 1.25<br>Fits 028A, 031AV, 032AV, 034AV,<br>041AV, 042AV, & 045AV | |

## Chain Adjusters

| | | | |
|---|---|---|---|
| **56-004** | Echo 43301611031<br>Echo 43301402830<br>John Deere PT6683 | **Chain Adjuster, Includes Pin**<br>Fits models 440, 500, 510, 550, 610, 600,<br>650, & 750 | |
| **56-022** | Husqvarna 537-0404-21 | **Chain Adjuster Kit**<br>Fits models 362XP, 365, 372, 385, 570, 575, & 576 | |
| **02-137** | Husqvarna 501452702 | **Chain Adjuster** - NEW<br>Fits most 42, 44, 55, 55, Rancher, 133, 234, 238, 242,<br>340, 345, & 350 chainsaws | |
| **02-138** | Husqvarna 501537101 | **Chain Adjuster** - NEW<br>Fits most 61, 66, 181, 266, 268, 268 Special, 272 XP, 281,<br>& 288 chainsaws | |
| **02-139** | Husqvarna 537 07 12-01 | **Chain Adjuster** - NEW<br>Fits Husqvarna 345, 346, 350, 350, 353, 357, & 359 | |
| **02-136** | Husqvarna 530 01 58-26 | **Bar Adjuster Pin** - NEW<br>Fits Husqvarna 141 | |

C

## Chain Adjusters

| OREGON | Replaces | Description | Product Code | |
|---|---|---|---|---|
| **56-002** | McCulloch 84929<br>McCulloch 90658<br>McCulloch 68656 | **Chain Adjuster with Bolt**<br>Fits Mini Mac 100 & 300 series | | |
| **56-003** | McCulloch 102115<br>McCulloch 91982<br>McCulloch 110590 | **Chain Adjuster with Bolt**<br>Fits 600 series | | |
| **56-001** | Homelite A00440<br>Homelite 69254-1A<br>Homelite 110590 | **Chain Adjuster with Bolt**<br>Fits XL, XL2, Super 2, 240, & 245 | | |
| **56-011** | Stihl 1118-664-1600<br>Stihl 1120-664-1500 | **Chain Adjuster with Bolt**<br>Fits models 009 & 028 | | |
| **56-008** | Stihl 1110-664-1600<br>Stihl 1110-664-1500 | **Chain Adjuster with Bolt**<br>Fits models 030, 031, 031AV, 031AVS, 032, 041A, 042, 042AV, 045, 045AV, & 045AV super | | |
| **56-025** | Stihl 1106-664-1501<br>Stihl 0000-951-2911 | **Chain Adjuster Kit**<br>Fits models 050, 051, 070, 075, 076, 08S, & 090 | | |
| **56-023** | Stihl 1125-007-1021 | **Chain Adjuster Kit**<br>Fits models MS360, MS380, & MS600 | | |
| **56-024** | Stihl 1123-640-1900<br>Stihl 1123-664-1400 | **Chain Adjuster Kit**<br>Fits models MS230 & MS250 | | |

## Grinding Wheels

High-quality, vitrified grinding wheels designed specifically for Oregon® chain and grinders. Resists burning the cutters and leaves a precision finish. Wheels will also fit Efco chain grinders.

| OREGON | Thickness | ID | OD | Chain Size | Product Code |
|---|---|---|---|---|---|
| OR534-18 | 1/8" | 7/8" | 5-3/4" | 1/4", .325", 3/8" LP | |
| OR534-316 | 3/16" | 7/8" | 5-3/4" | 3/8" std., .404" | |

C

OREGON Replaces | Description | Product Code

## Tygon® Fuel Line

| OREGON | I.D. | O.D. | Length | Product Code |
|---|---|---|---|---|
| **Compliant with EPA & CARB regulations; E10 compatible** | | | | |
| 07-450 | 1/4" | 3/8" | 50' | |
| **Compliant with EPA & CARB Regulations; E85 compatible** | | | | |
| Sold in bags of 10 pieces; priced per piece | | | | |
| 07-551 | 1/8" | 1/4" | 1' | |
| 07-552 | 3/16" | 5/16" | 1' | |
| 07-553 | 3/32" | 3/16" | 1' | |
| 07-555 | 0.080" | 0.140" | 1' | |
| **Non-Compliant with EPA & CARB Regulations; E10 compatible** | | | | |
| 07-153 | 3/32" | 3/16" | 50' | |
| 07-157 | 1/8" | 3/16" | 25' | |
| 07-151 | 1/8" | 1/4" | 50' | |
| 07-152 | 3/16" | 5/16" | 50' | |
| 07-150 | 1/4" | 3/8" | 50' | |
| 07-154 | 1/16" | 1/8" | 50' | |
| 07-155 | 0.080" | 0.140" | 50' | |
| 07-156 | 0.117" | 0.211" | 25' | |
| 07-158 | 5/16" | 7/16" | 50' | |

⚠ Tygon fuel lines, Oregon fuel lines, and primer bulbs are compatible with up to 10% Ethanol blend fuels unless otherwise stated. Using Ethanol blends higher than 10% may speed deterioration and cause leakage.

## Oregon® Fuel Line

- Oregon Fuel Line is a specially formulated gas and oil vinyl tubing — made for use with lawnmowers, chainsaws, and snowmobiles
- Maintains air tight seal on fittings — even in extreme temperatures
- Translucent material resists swelling or hardening
- Compare to Tygon®

| OREGON | ID | OD | Length | Product Code |
|---|---|---|---|---|
| **Non-Compliant with EPA and CARB regulations; E40 Compatiable** | | | | |
| 07-254 | 1/16" (.062") | 1/8" (.125") | 25' | |
| 07-262 | 1/16" (.062") | 1/8" (.125") | 12-1/2' | |
| 07-263 | .080" | .140" | 12-1/2' | |
| 07-255 | .080" | .140" | 25' | |
| 07-253 | 3/32" (.093") | 3/16" (.187") | 50' | |
| 07-261 | 3/32" (.093") | 3/16" (.187") | 25' | |
| 07-264 | .117" | .211" | 12-1/2' | |
| 07-266 | 3/32" (.093") | 13/64" (.203") | 25' | |
| 07-256 | .117" | .211" | 25' | |
| 07-265 | 1/8" (.125") | 3/16" (.187") | 12-1/2' | |
| 07-257 | 1/8" (.125") | 3/16" (.187") | 25' | |
| 07-259 | 1/8" (.125") | 1/4" (.250") | 25' | |
| 07-251 | 1/8" (.125") | 1/4" (.250") | 50' | |
| 07-260 | 3/16" (.187") | 5/16" (.312") | 25' | |
| 07-252 | 3/16" (.187") | 5/16" (.312") | 50' | |
| 07-258 | 1/4" (.250") | 3/8" (.375") | 25' | |

| OREGON | Replaces | Description | Product Code |
|---|---|---|---|

## Fuel Line & Primer Bulbs

| | | | |
|---|---|---|---|
| **07-008** | Homelite 63744A | **Fuel Line**<br>Molded<br>Fits XL-12 & Super XL-12<br>Length: 9" | |
| **07-071** | Husqvarna 501 28 59-01 | **Fuel Line**<br>Fits chian saws & trimmers 140, 162, 266, 36, & 61 | |
| **36-419** | Husqvarna 501-51-99-01 | **Oil Line** - NEW<br>Husqvarna 61, 266, 268 | |
| **07-009** | McCulloch 215708<br>McCulloch 301011 | **Fuel Line**<br>Fits McCulloch 1010 series<br>Length: 6-5/16", ID: 3/16" | |
| **07-011** | Shindaiwa 20011-8545<br>Shindaiwa 20011-85459 | **Fuel Tube**<br>Fits models T25, T27, C35, & B45 | |
| **07-007** | Stihl 1119-358-7700 | **Fuel Line**<br>Fits 038<br>Length: 4-15/16" | |
| **07-135** | Stihl 1119-358-7702 | **Fuel Line** | |
| **07-075** | Stihl 1123-358-7701 | **Fuel Line**<br>Fits 021, 023, & 025 | |

## Fuel Line

| | | | |
|---|---|---|---|
| **07-136** | Stihl 1124-358-7700 | **Fuel Line**<br>Fits MS640, 660, 780, 088, & 084 | |
| **07-072** | Stihl 1127-358-7702 | **Fuel Line**<br>Fits 029, 034, 036, & 039 | |
| **07-134** | Stihl 1128-358-7701 | **Fuel Line**<br>Fits MS341, 361, 440, & 460 | |
| **07-149** | Stihl 1127-647-9400 | **Oil Hose** - NEW<br>Fits 026, 034, 036, 064, 066, MS 260, & 361 | |

C

# Chainsaw & Cut-Off Saw Parts

| OREGON | Replaces | Description | Product Code |
|---|---|---|---|

## Fuel Line

**36-420** Stihl 1130-647-9400

**Oil Hose** - NEW
Fits Stihl 017, 018, MS170, & MS180

**07-167** Stihl 1123-141-8600

**Impulse Line** - NEW
Fits Stihl 021, 023, 025, MS210, MS210C, MS230, MS230C, MS250, & MS250C

## Primer Bulbs

| OREGON | OEM | Type | Series | OD | HT | Product Code |
|---|---|---|---|---|---|---|
| 49-020 | Walbro 188-12 | Primer bulb | — | .60" | .55" | |
| 49-026 | Walbro 188-11 | Primer bulb | WR series | .575" | .390" | |
| 49-027 | Walbro 188-13 | Primer bulb | HDA series | .725" | .60" | |
| 49-028 | Zama 0057003 | Primer bulb | CIQ series | .675" | .575" | |



Tygon® fuel lines, Oregon® fuel lines and primer bulbs are compatible with up to 10% Ethanol blend fuels unless otherwise stated. Using Ethanol blends higher than 10% may speed deterioration and cause leakage.

## Fuel & Oil Caps

**07-004** Homelite 69451
Homelite UP06862

**Duck Bill Valve**
Fits XL, XL2, Super 2, & Homelite 63718
Used in fuel cap

**56-019** Stihl 0000-350-0520

**Fuel Cap**
Fits 023, 025, 026, & 028

**07-131** 1130-350-0500

**Fuel Cap**
Fits 017, 018, 019, MS170, 180, & 190

**07-132** 0000-350-0531

**Fuel Cap**
Fits 066 & MS660

**56-018** Stihl 0000-350-0510

**Oil Cap**

C

## Fuel Filters

| OREGON | Replaces | Description | Product Code |
|---|---|---|---|
| **07-215** | Universal | **Fuel Filter**<br>For 2-cycle engines on chainsaws, trimmers, & blowers using porous plastic filter (40 micron)<br>Inlet: 3/16" | |
| **07-206** | Echo 131205-06530<br>Tillotson OW-802 | **Fuel Filter**<br>Use with 1/8" fuel line<br>OD: 9/16", length: 1-1/2" | |
| **07-201** | Homelite 64083-1<br>Tillotson 95-182 | **Fuel Filter - Felt**<br>Use with Oregon® 07-206<br>OD: 9/16", ID 1/4", length: 1" | |
| **07-213** | Husqvarna 503-4432-01<br>Husqvarna 5018776-01<br>Husqvarna 5018776-02<br>Husqvarna 5021618-01 | **Fuel Filter**<br>For 3/16" fuel line<br>Fits models 36, 40, 41, 42, 45, 50, 51, 61, 66, 181, 281, 234, 298, 2100, 2101, & 394 Pro (165R, RX, 244RX) |  |
| **07-207** | John Deere PT12362<br>Tillotson OW-497<br>Weed Eater 24841<br>Poulan 530091878 | **Fuel Filter**<br>Use with 1/8" fuel line<br>OD: 13/16", length: 1-1/2" | |
| **07-200** | McCulloch 93720<br>McCulloch 216985<br>Homelite 49422<br>Homelite UP0387<br>Homelite 96639 | **Fuel Filter**<br>For most saws with 1/8" in tank pickup<br>OD: 1/2", length: 1-1/4" | |
| **07-204** | McCulloch 63932 | **Felt**<br>OD: 3/4", length: 1" | |
| **07-066** | Poulan #530095646 | **Fuel Filter**<br>Use with 1/8" fuel line | |
| **07-133** | 0000-350-3506 | **Fuel Fliter**<br>Fits TS410 & TS420 | |
| **07-109** | Stihl 1115-350-3503 | **Fuel Filter**<br>Use with 1/4" fuel line<br>For most models of chainsaws<br>OD: 23/32", length: 1-3/4" | |
| **07-217** | Stihl 1120-350-3500 | **Fuel Filter**<br>For chainsaws<br>Fits models 021, 023, 025, 020T, 070, 034, 038, 029, & 036 | |

C

# Chainsaw & Cut-Off Saw Parts

| OREGON | Replaces | Description | Product Code |
|---|---|---|---|

## Fuel Filters

| | | | |
|---|---|---|---|
| **07-205** | Stihl 1110-358-1800 | **Foam Fuel Filter**<br>OD: 5/8", length: 1-1/4" | |
| **07-214** | Walbro 125-527 | **Fuel Filter**<br>Dual-filtration felt & stainless steel mesh element | |
| **07-219** | Walbro 125-528 | **Fuel Filter**<br>For 3/16" fuel line & engines up to 80CC | |
| **07-137** | Walbro 125-552 | **Fuel Filter**<br>Universal | |
| **07-208** | Zama ZF2 | **Fuel Filter**<br>For 3/16" fuel line<br>Use on small CC engines<br>175 micron | |
| **07-209** | Zama ZF3 | **Fuel Filter**<br>For 1/8" fuel line<br>Use on larger CC engines<br>175 micron | |
| **07-210** | Zama ZF4 | **Fuel Filter**<br>For 3/16" fuel line<br>Use on larger CC engines<br>175 micron | |
| **07-211** | Zama ZF5 | **Fuel Filter**<br>For 1/4" fuel line<br>Use on larger CC engines<br>175 micron | |

## Starter Pulleys

| | | | |
|---|---|---|---|
| **55-811** | Homelite 97768A | **Starter Pulley**<br>Fits XL, Super 2, 240, & 245 series<br>OD: 2-9/16"<br>Use Oregon® 43-528 (OBS) replacement spring | |
| **31-002** | Husqvarna 5031024-05 | **Starter Pulley**<br>Fits chainsaw models 61, 268, & 272 | |
| **31-006** | Stihl 1123-195-0400 | **Starter Pulley**<br>Fits chainsaw models 017, 018, 023, & 025 | |

C

| OREGON | Replaces | Description | Product Code |
|---|---|---|---|

## Starter Springs

| OREGON | OEM No. | Description | Product Code |
|---|---|---|---|
| 43-540 | Husqvarna 50 15 204 01 | Starter Spring<br>Fits 61 Rancher, 162, 181, & 266 | |
| 43-562 | Husqvarna 50 17 631 01 | Starter Spring<br>Fits 136, 141, 240, 245, 334, 335, 336, 338, 339, 36, 40, 41, 45, 50, 51, & 55 | |
| 43-540 | Jonsered 501 52 04 01 | Starter Spring<br>Fits 630, 630 Super, & 670 | |
| 43-694 | Stihl 1118-190-0600 | Starter Spring<br>Fits 024, 026, 028, 032, 034, 08S | |
| 43-699 | Stihl 1117-190-0601 | Starter Spring<br>Fits 038, 041 (5816401...), 045 (5919431...) 048, 050, 051 (674961...), 056, & 075 | |
| 43-685 | Stihl 4112-195-1600 | Starter Spring<br>Fits FS60, 61E, 65AVE, 80, 80E, 90AVE | |

## Miscellaneous Saw Part

**56-030** Stihl

**Worm and Spring**
Fits 029, 034, 036, & 039

## Carburetor Mounting/Intake Gasket Assortments

| OREGON | Qty. | Description | Product Code |
|---|---|---|---|
| 08-010 | 114 | Gasket/Intake<br>2-cycle engines, standard refill quantity 10 | |

### Components

| | | |
|---|---|---|
| | 10 | Intake gasket for HU* |
| | 5 | Intake gasket for HK* |
| | 5 | Intake gasket for HK* |
| | 10 | Intake gasket for HCA, HDA* |
| | 5 | Intake gasket for HL* |
| | 5 | Intake gasket for HS* |
| | 10 | Intake gasket for WS** |
| | 5 | Intake gasket for MDC** |
| | 2 | Intake gasket for WZ** |
| | 2 | Intake gasket for WZ** |
| | 5 | Intake gasket for HL* |
| | 10 | Intake gasket* |
| | 10 | Intake gasket* |
| 49-262 | 10 | Intake gasket |
| | 10 | Intake gasket |
| | 5 | Gasket material |
| | 5 | Intake gasket* |

* Tillotson **Walbro

C

# Commercial Parts

| OREGON | Replaces | Description | Product Code | |
|---|---|---|---|---|

## Blade Bolts & Nuts

| | | | | |
|---|---|---|---|---|
| **48-011** | Exmark 513547<br>Toro 99-2842 | **Deck Wheel Bolt**<br>For Lazer Z models | | |
| **04-125** | Jacobsen 182248<br>Scag 4001-41<br>Wright Stander 11990007<br>Ferris 1525019-76 | **Blade Bolt**<br>For most commercial mowers<br>Thread: 5/8-11, length: 9-1/2" | | |

## Eye Bolts

| | | | | |
|---|---|---|---|---|
| **48-006** | Scag 43025 | **Turnbuckle**<br>For 32" - 61" Cut<br>Use with Oregon® 48-072 & 48-071 | | |

## Cables

| | | | | |
|---|---|---|---|---|
| **46-416** | Scag 48828 | **Steering Cable Assembly**<br>Fits ST17KA & 19KH | | |

## Caster Parts

| | | | | |
|---|---|---|---|---|
| **48-200** | Bobcat 36129<br>Bunton PL0457<br>Bunton PL0458<br>John Deere PT8663<br>Exmark 302122 | **Caster Support Arm**<br>Fits Bunton and John Deere<br>32", 36" & 48" with 6" wheel assembly<br>ID: 3/4", mounting holes: 3/8"<br>Use with Oregon 48-205 caster & bushing 45-078 (use 1) | | |
| **48-135** | Bobcat 36526 | **Yoke**<br>9" caster<br>Use with Oregon 48-132 support arm<br>Use with Oregon 72-796 pneumatic wheel | | |
| **48-205** | Bobcat 36013A<br>Bunton PL0556<br>John Deere PT8670 | **Caster Yoke Assembly**<br>Use with Oregon 09-801 & 72-745 | | |
| **48-202** | Scag 45006<br>Wright Stander 9346001 | **Double Sided Caster Yoke**<br>Use with Oregon 09-804 spacer<br>Use with Oregon 72-795 wheel assembly | | |

C

| OREGON | Replaces | Description | Product Code |
|---|---|---|---|

## Caster Parts

| | | | |
|---|---|---|---|
| **48-237** | Wright 93460008 | **Double Sided Caster Yoke**<br>Yoke inside width: 5-1/4"<br>Shaft length: 6-5/8"<br>Shaft diameter: 1-1/4" | |
| **45-127** | Scag 48100-01<br>Velke VPIVOT BUSH | **Bushing for Caster Support Arm**<br>For steering shaft bushing for pivot wheel on 12, 13, & 17 HP Turf Runner | |
| **45-266** | Toro 110-8837 | **Caster Wheel Bearing Kit**<br>Includes bearing cones, bearing cups, bearing spacers, & bearing seals | |

## Coupler Assemblies

| | | | |
|---|---|---|---|
| **48-148** | Bobcat 38204<br>Exmark 323275/324157<br>Scag 48226/46513 | **Transmission Coupler**<br>For all 5 speeds<br>ID: 5/8" OD: 1.138", length: 2"<br>36-tooth & splined | |

## Damper Cylinders

| | | | |
|---|---|---|---|
| **48-233** | Cub Cadet 02003622 | **Damper Cylinder – Return to Neutral**<br>Fits ENFORCER 44, ENFORCER 48, ENFORCER 54, Z-Force 44, Z-Force 48, Z-Force 50, Z-Force 54, Z-Force 60, Z-Force Pro 48, & Z-Force Pro 54 | |
| **48-232** | Exmark 116-0027 | **Damper Cylinder – Motion Control**<br>Fits Next Lazer ASX (S/N 850,000 & up) & Next Lazer Z air cooled (S/N 790,000 & up )<br>Threaded studs: 5/16-18 (both ends)<br>Extended length: 13", closed length: 9 1/2" | |
| **48-236** | Exmark 109-2339<br>Exmark 1-523027 | **Damper Cylinder – Motion Control**<br>Fits Lazer Z AS (S/N 790,000–849,999), LZE20KA484, LZE22KA484, LZE24KA524, LZE27KC604, LZS22KA48, LZS23KC524, LZS24KA524, LZS25EKC604, LZE730KA604, LZE740EKC604, LZE740KC604, LZS651KA484, LZS680KC524, LZS691KA524, LZS730EK, LZX24KA526, LZX27KC526, LZX27KC606, LZX29EKC606, LZX29KA606, LZX34KC606, LZX34KC726, LZS27KC604, LZS29EKC, LZS29KA724, LZS29PKA604, LZS29PKA606, LZS29PKA724, LZX23KC486, LZS25KC604, LZS27KC524, LZX38KC606, LZX38KC726 (S/N 920,000 & up), LZE600KA484, LZE691KA524, LZE730EKC604, LZS740KC524, LZS740KC604, LZS740PKA604, LZS740PKA724, LZS749EKC604, LZS749EKC724, LZS801KA524, LZS801KA604, LZS801KA724 , LZS801PKA604, LZS801PKA724, LZX680KC486, LZX740EKC526, LZX740KC526, LZX740KC606, LZX749EKC606, LZX801KA606, LZX940EKC606, LZX940KC606, LZX940KC726, LZX980EKC726, LZX980KC606, & LZX980KC726 (S/N 312,000,000 & up)<br>Hole diameter (both ends): 5/16", extended length: 10", closed length: 7" | |

C

| OREGON | Replaces | Description | Product Code |
|---|---|---|---|

## Hydrostatic Drive System — Wheel Motors

**27-500**
Exmark 1-523328
Exmark 103-6988
Parker TF0240US081AADD

**Wheel Motor**
Replaces Parker wheel motor
Fits Lazer Z & Lazer Z HP
serial 440, 000 to 509, 999

---

**27-501**
Exmark 1-603718
Parker TE0230FS250AAFA
Parker TE0230FS250AADD

**Wheel Motor**
Replaces Parker wheel motor
Fits Turf Tracer, Tracer XP, & Viking

---

**27-503**
Parker TE0230US250AA
Encore 453068

**Wheel Motor**
Replaces Parker wheel motor
Fits Encore walk-behinds, Encore Prowler
Front Cut, Toro, & Husqvarna

---

**27-502**
Parker TF0240LS080AAFB
Parker TF0240LS080AAKY
Scag 482639
Scag 481529
Scag 4159280
Hustler 602382

**Wheel Motor**
Fits Scag Turf Tiger, Tiger Cub, Wildcat, SCR, & SMST,
Bobcat / Bunton / Ryan Procat, Predator, Bunton Missile,
Bunton Torpedo & other models, & Hustler X-One

---

**27-504**
Hydro-Gear HGM-15E-3138
Scag 483190
Hustler 600922
Ferris 5100407

**Wheel Motor**
Replaces Hydro-Gear wheel motor.
Fits Scag Tiger Cub, Turf Tiger, Wildcat, Z Cat
Ferris IS1500ZX, IS200Z (15IN3/REV - LH), & Hustler

C

## Spacers & Bushings

| OREGON | Replaces | Description | Product Code |
|---|---|---|---|
| **09-801** | Bobcat 32044A<br>Bunton PLO417<br>John Deere PT8886 | **1/4" Yoke Spacer**<br>OD: 1-1/4", ID: 3/4", thickness: 1/4" | |
| **09-802** | Bobcat 64163-12<br>John Deere PT8888<br>Kees 363033<br>Snapper 7-6436<br>Bunton PLO617 | **Blade/Spindle Spacer**<br>OD: 1", ID; 5/8"; thickness: 1/4"<br><br>Exmark 303164<br>Ferris 154177 | |
| **09-803** | Bobcat 64163-22<br>Ferris 1541476 | **1/2" Caster Yoke Spacer**<br>ID: 1", OD: 1-3/4", thickness: 1/2" | |
| **48-320** | Bobcat 48053-2A | **Bushing**<br>Use with Oregon® 48-207 | |
| **09-804** | Bunton PJH1054<br>John Deere M85178<br>Scag 43037-01<br>Exmark 303044<br>Jacobsen 553668 | **Bushing**<br>ID: 7/8", OD: 1-1/2", thickness: 1/2" | |
| **09-808** | Bobcat 64163-07 | **1/4" Yoke Spacer**<br>ID: 1", OD: 1-3/4", thickness: 1/4" | |
| **48-009** | Exmark 513547 | **Spanner Bushing**<br>ID: 1/2", OD: 3/4", length: 4-5/8"<br>Fits Turf Ranger, Turf Tracer & Viking Metro models 80,000 series & higher with 36", 48", 52", & 60" deck | |
| **48-235** | Exmark 103-3037 | **Splined Blade Bushing**<br>For mowers using blades with 15/16" center hole | |
| **09-006** | Grasshopper 421200 | **Fiber Washer** | |
| **45-030** | | **Bearing Caster Yoke** | |
| **45-188** | Scag 43022<br>Bobcat 43180<br>Ferris 1541659 | **Spanner Bearing**<br>ID: 1/2", OD: 5/8", length: 4-1/4" | |
| **48-141** | Scag 43278<br>Scag 43038<br>Encore 363170<br>Jacobsen 552187 | **1/4" Blade Spacer**<br>ID: 5/8", OD: 1-1/2", thickness: 1/4" | |

09-801

09-802

09-803

09-804

45-030

45-125

45-188

48-320

C

| OREGON | Replaces | Description | Product Code |
|---|---|---|---|

## Fuel Tank Strap

| | | | |
|---|---|---|---|
| **76-143** | Scag 421239 | **Fuel Tank Strap**<br>Width: 1", length: 33-3/4"<br>Thickness: .040"<br>1/4" hole on each end | |

## Brake Bands / Brake Assemblies

| | | | |
|---|---|---|---|
| **48-145** | Scag 48210<br>Snapper 1-7048 | **Brake Band**<br>For 36", 40", 48" , 52", & 61" midsize<br>Fits Snapper Pro 7 | |

Can't find what you're looking for?
Try us online to search the latest products available.

OregonProducts.com

| OREGON | Replaces | Description | Product Code |
|---|---|---|---|

## Universal

**60-426** Universal

**Universal Control Cable**
Converts from positive to negative action, 1/4" bolt handle bar mount, plastic conduit cuts easily to replace applications listed below. Adjust control to full throttle position (+ = longest, - = shortest) for inner wire measurement
Conduit size: 3/16", conduit: 71", inner wire: 76",
inner wire dia.: .060", wire travel: 1-5/8"

### John Deere

| OEM Number | Conduit Length | Action | Inner Wire Extension |
|---|---|---|---|
| AM115246 | 53-3/8" | + | 2-1/4" |

### Lawn-Boy

| OEM Number | Conduit Length | Action | Inner Wire Extension |
|---|---|---|---|
| 684693 | 52-1/2" | + | 1-1/2" |

### Murray

| OEM Number | Conduit Length | Action | Inner Wire Extension |
|---|---|---|---|
| 42096 | 41-1/4" | + | 2" |
| 42775 | 42-1/2" | + | 2" |
| 42877 | 41-1/4" | + | 2" |
| 42878 | 47-1/2" | + | 2" |
| 42949 | 39" | + | 2" |

### Noma

| OEM Number | Conduit Length | Action | Inner Wire Extension |
|---|---|---|---|
| 52061 | 46-1/2" | + | 2-1/2" |
| 52769 | 46-1/2" | + | 2-1/2" |

### Roper

| OEM Number | Conduit Length | Action | Inner Wire Extension |
|---|---|---|---|
| 107701X | 43" | + | 2-1/4" |
| 111274X | 47" | + | 1-3/4" |
| 111903X | 44" | + | 2" |
| 111930X | 65-1/8" | + | 2-1/8" |

### Snapper

| OEM Number | Conduit Length | Action | Inner Wire Extension |
|---|---|---|---|
| 1-1251 | 48" | + | 1-3/4" |
| 1-6565 | 58" | + | 3-3/4" |
| 1-8088 | 46" | + | 1-3/4" |
| 1-8186 | 46-1/2" | + | 2-1/2" |
| 1-8187 | 42" | + | 2-1/2" |
| 1-8237 | 13-3/4" | + | 3-1/4" |
| 1-8353 | 12-1/2" | - | 1" |
| 1-8486 | 12-1/2" | - | 1" |
| 1-8486 | 11" | - | 2" |
| 1-8780 | 43-1/4" | - | 2-1/4" |
| 1-8785 | 45-1/2" | + | 3-7/8" |

### Snapper

| OEM Number | Conduit Length | Action | Inner Wire Extension |
|---|---|---|---|
| 1-8839 | 42-3/4" | - | 1-1/2" |
| 1-8840 | 42-3/4" | - | 1-1/2" |
| 1-8889 | 12-1/2" | - | 1" |
| 1-9254 | 45" | + | 3-1/2" |
| 1-9266 | 48" | + | 3-1/2" |
| 2-3449 | 46-1/2" | + | 2-1/2" |
| 2-3829 | 62" | - | 1" |
| 76065 | 51" | + | 2" |

### Toro

| OEM Number | Conduit Length | Action | Inner Wire Extension |
|---|---|---|---|
| 27-6500 | 42" | + | 2" |
| 28-4810 | 54-1/2" | + | 2" |
| 28-6170 | 59" | + | 2" |
| 28-6740 | 38" | + | 2" |
| 29-9610 | 44-1/2" | + | 2" |
| 29-9612 | 44-1/2" | + | 2-1/8" |
| 33-2530 | 38" | + | 1-7/8" |
| 33-2531 | 42" | + | 1-7/8" |
| 33-2532 | 59" | + | 1-7/8" |
| 33-2533 | 49" | + | 1-7/8" |
| 33-2534 | 54-1/2" | + | 1-7/8" |
| 33-2535 | 39-1/2" | + | 1-7/8" |
| 33-2536 | 62" | + | 1-7/8" |
| 40-5520 | 42" | + | 1-7/8" |
| 40-5521 | 38" | + | 1-7/8" |
| 40-5522 | 54-1/2" | + | 1-7/8" |
| 40-5523 | 62" | + | 1-7/8" |
| 40-5524 | 45" | + | 1-7/8" |
| 40-5525 | 49-1/2" | + | 1-7/8" |
| 40-5526 | 35-1/2" | + | 2" |
| 53-7831 | 46-1/2" | + | 3-7/8" |

C

# Control Cables

## Universal

| OREGON | Replaces | Description | Product Code |
|---|---|---|---|
| **60-400** | Murray 42877<br>Murray 42093<br>Murray 42096<br>Noma/AMF 57353<br>Noma/AMF 53415 | **Throttle Control Cable Assembly**<br>Positive detent in stop & fast position, 1/4" bolt mounting hole, proper travel for B & S and Tecumseh automatic choke engines, and all plastic, low friction conduit with galvanized inner wire eliminates corrosion for smoother running<br>Conduit size: 3/16", conduit length: 60", inner wire: .054", wire travel: 1-3/8" | |
| **514366** | | **Blister Pack** - 1 of 60-400 | |
| **60-408** | Snapper 7-6065 | **Throttle Control Cable Assembly**<br>Positive action control, deluxe model using heavy gauge metal, replaces mounting bracket and lever, sure-grip T-knob, universal style for center or side mounting with hole for 1/4" bolt<br>Conduit length: 51", inner wire: .054", inner wire length: 53", wire travel: 1-1/2" | |
| **60-409** | | **Throttle Control Cable Assembly**<br>Positive action control, deluxe model using heavy gauge metal mounting bracket and lever, sure-grip T-knob, for center or side mounting with hole for 1/4" bolt<br>Conduit size: 3/16", conduit length: 69", inner wire: .054", inner wire length: 71" | |
| **60-226** | | **Throttle Control Cable Assembly**<br>Positive action control, z-bend, no detents<br>Mounting hole spacing: 2", conduit size: 3/16", conduit length: 26-1/4", Inner wire: .054", inner wire length: 32", wire travel: 1-5/8" | |
| **60-210** | | **Throttle Control Cable Assembly**<br>Plain end – no z-bend<br>Conduit size: 3/16", conduit length: 72", inner wire: .060", wire travel: 1-7/8" | |
| **60-209** | | **Throttle Control Cable Assembly**<br>Plain end – no z-bend<br>Conduit size: 3/16", conduit length: 54", inner wire: .060", wire travel: 1-3/8" | |
| **60-365** | | **Throttle Control Cable Assembly**<br>Negative action control – reversible<br>For either 3/4" or 7/8" tubing, slotted mounting for 1-13/16" to 2", spring washer and center mount for 1/4" bolt, detents front and rear<br>Conduit size: 3/16", conduit length: 48", inner wire: .060" | |
| **60-046** | | **Throttle Control Cable Assembly**<br>**Right-hand** version<br>Conduit size: 3/16", conduit length: 48", inner wire dia.: .060" | |

C

| OREGON | Replaces | Description | Product Code |
|---|---|---|---|

## Universal

**60-036**

**Throttle Control Cable Assembly**
**Left-hand** version
Positive action control, for most popular for panel mounting on riding mowers, tractors, and self-propelled walk-behinds

**60-106**

**Throttle Control Cable Assembly**
Positive action control, steel control with aluminum cover plate
Suggested mounting: panel or bolt thru center
Conduit size: 3/16", conduit length: 48", inner wire dia.: .060"

**60-160**

**Throttle Control Cable Assembly**
Extra long wire and conduit for use on walk-behind mowers with front throttle controls, all steel construction
Conduit size: 3/16", conduit length: 66", inner wire length: 71"

**60-860**

**Throttle Control Cable Assembly**
Same as Oregon® 60-160 but with 48" inner wire
Conduit size: 3/16", conduit length: 43-1/2", inner wire length: 48",
wire travel: 1-1/2"

## AMF / Dynamark / Noma

**46-330** 301503

**Zone Safety Control Cable**
Safety control, blade engagement for walk-behind mowers, 1/4" eyelet on one end, z-bend on the other end
Conduit length: 23", inner wire length: 56"

## AYP

**60-004** 700417

**Throttle Control Cable Assembly**
20" and 22" side and rear discharge, Z-bend
Conduit size: 3/16", inner wire length: 49-1/2"

**46-322** 146323

**Drive Control Cable**
Self-propelled control for 22" self-propelled mower, flexible inner wire with spring on end, Z-bend on spring
Conduit length: 56"

**46-325** 130861

**Zone Safety Control Cable**
Zone control cable for 22" walk-behind push mower model PP751, die cast z-bend on each end
Conduit length: 52", cable length: 59-3/16"

C

# Control Cables

| OREGON | Replaces | Description | Product Code |
|---|---|---|---|
| **AYP** | | | |
| **60-000** | 851462 | **Throttle Control Cable Assembly**<br>For 20" walk-behind mowers (1997 & newer)<br>Conduit length: 63-1/2", cable length: 68" | |
| **60-525** | 532175067<br>532169676<br>169676<br>175067 | **PTO Cable Kit**<br>Fits LT16542, LT18542, LT18542A, LT18542B, LTH1342, LTH1342A, LTH1342B, LTH1342C, LTH1742A, LTH1742B, LTH1742C, LTH1742D, LTH18542A, LTH18542B, LTH18542C, LTH2042A, LTH2042B, LTH2042C, YTH130, YTH1842A, YTH1842B, & YTH1842C | |
| **60-526** | 532435111<br>532408714<br>532197257<br>435111<br>408714<br>197257 | **PTO Cable**<br>Fits CT126, LTH1438,LTH1538, LTH18538, YT16542, & YT1942<br>Length 69" | |
| **60-105** | 532133107<br>133107 | **Zone Safety Control Cable**<br>For walk-behind mowers built between (1999–2004)<br>Conduit length 56", cable length: 62" | |
| **60-103** | 532184588<br>184588 | **Drive Control Cable**<br>For self-propelled mowers models 219611X83E, 961240001, 96143000601, 96143000600, 954224095, & 9612001802<br>Conduit length 57", cable length: 60-1/4" | |
| **60-104** | 532189182<br>189182 | **Vari-Speed Drive Control Cable**<br>Assembly for self-propelled mower models 96143000100 & 954223883<br>Conduit length 59", cable length: 68-3/4" | |
| **60-102** | 532407816<br>407816 | **Drive Control Cable**<br>For self-propelled mower models 96142003700, 96142006900, 96142008400, 96142008401, 96143006105, 96143008001, 96143005800, & 961430061<br>Conduit length 59-1/2", cable length: 68-1/2" | |
| **60-101** | 532440855<br>532428460<br>440855 | **Brake Cable**<br>For 26" cut rider models 96024000100 & 9622000700<br>Conduit length 36-1/2", cable length: 44-1/2" | |

C

| OREGON | Replaces | Description | Product Code |
|---|---|---|---|

## AYP

| | | | |
|---|---|---|---|
| **60-108** | 532156581<br>532168552<br>156581<br>168552 | **Zone Safety Control Cable**<br>For walk-behind mowers<br>Conduit length 53-1/2", cable length: 59-1/2" | |
| **60-107** | 532176556<br>176556 | **Zone Safety Control Cable**<br>For walk-behind mowers built between (2006–2010)<br>Conduit length 46", cable length: 52" | |
| **60-110** | 532283281<br>183281 | **Zone Safety Control Cable**<br>For walk-behind mowers built between (2005–2010)<br>Conduit length 46-1/2", cable length: 52-1/2" | |
| **60-109** | 532183567<br>183567 | **Zone Safety Control Cable**<br>For walk-behind mowers models<br>Fits 5521CHV, 5521RS, 62522SH, 6522SL, &<br>65021CHV (2005–2010)<br>Conduit length 53-1/2", cable length: 59-1/2" | |
| **74-021** | AYP 158152<br>AYP 582991501<br>Husqvarna 582991501 | **Control Cable** - NEW<br>Fits AYP224110X92E0, 2244110X92E2, 224111X83E, 96114001500,<br>96114001501, 96114011800, HD6A22HWD, PR600N22S,<br>PR600N22SH, 96114000311, 96114000312, 96114000313,<br>96114000314, 96114000315, 96114000316, 96114000317,<br>96114000403, and 96114001200<br>Cable Length: 55 1/2"<br>Conduit Length: 48" | |

## Bobcat

| | | | |
|---|---|---|---|
| **60-410** | 118020-07 | **Throttle Control Cable Assembly**<br>New style – long handle<br>Conduit size: 3/16", conduit length: 29", inner wire dia.: .060",<br>inner wire length: 31-1/2", wire travel: 1-5/8" | |

## Cub Cadet

| | | | |
|---|---|---|---|
| **60-008** | 831-0823A<br>831-0823<br>831-0798<br>731-0823 | **Throttle Control Box**<br>For riders and tillers<br>Does not include throttle wire | |
| **60-016** | 811-0185<br>811-00303<br>811-00500 | **Throttle Control Head**<br>For walk-behind mowers<br>Does not include throttle wire | |

C

# Control Cables

| OREGON | Replaces | Description | Product Code | |
|---|---|---|---|---|
| **Cub Cadet** | | | | |
| **60-005** | 946-0875<br>746-0875 | **Housing Only**<br>Fits Oregon® 60-016 | | |
| **60-007** | 946-0876<br>746-0876 | **Throttle Lever Only**<br>Fits Oregon® 60-016 | | |
| **46-044** | 946-0897A<br>946-0897<br>746-0897A<br>746-0897 | **Auger Clutch Cable**<br>For many two-stage snow throwers (1995–2012)<br>Total length: 49" | | |
| **46-338** | 946-0901<br>746-0901 | **Chute Deflector Control Cable**<br>Fits 31A snow throwers (1998–2005)<br>Total length: 54-3/8", conduit length: 43-7/8" | | |
| **46-046** | 946-0902<br>746-0902 | **Chute Control Cable**<br>For some two-stage snow throwers (1998–2010)<br>Total length: 73", conduit length: 66" | | |
| **46-047** | 946-0903<br>746-0903 | **Chute Control Cable**<br>For some two-stage snow throwers (1998–2010)<br>Total length:73-1/2", conduit length: 66-1/2" | | |
| **46-048** | 746-0949A<br>746-0949 | **Steering Cable**<br>For some two-stage snow throwers (1998–2010)<br>Total length: 34-7/16", conduit length: 31-7/8" | | |
| **46-341** | 946-0951A<br>746-0951A<br>746-0951 | **Auger Idler Cable**<br>Fits 31A snow throwers built (1998–2014)<br>Total length: 16-5/16" | | 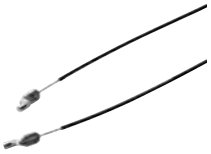 |
| **46-340** | 746-0952 | **Drive Control Cable**<br>Fits 31A snow throwers (1998–2014)<br>Total length: 26-1/2" | | |

C

## Cub Cadet

| OREGON | Replaces | Description | Product Code |
|---|---|---|---|
| **46-049** | 946-0956C<br>946-0956B<br>746-0956C<br>746-0956B<br>746-0956A<br>746-0956 | **Steering Cable**<br>For some two-stage snow throwers (1998–2012)<br>Total length: 39", conduit length: 36-1/2" | |
| **46-050** | 746-0970 | **Deck Lift Cable**<br>Fits some RZT17, RZT22, RZT42, & RZT50<br>Total length: 5-7/8" | |
| **46-051** | 946-1130<br>746-1130 | **Safety Control Cable**<br>Fits walk-behind mower 11A-439Q710 2006<br>Total length: 54", Conduit length: 40" | |
| **46-032** | 946-04229B<br>946-04229<br>746-04229B<br>746-04229 | **Drive Clutch Cable**<br>For many two-stage snow throwers (2005–2012)<br>Total length: 45-1/2" | |
| **46-033** | 946-04230A<br>946-04230<br>746-04230A<br>746-04230 | **Auger Clutch Cable**<br>For many two-stage snow throwers (2005–2012)<br>Total length: 48" | |
| **60-137** | 946-04352A<br>946-04352<br>746-04352A<br>746-04352 | **Throttle Control**<br>Fits some GT1554, LT1042, LT1054, LT1046, LT1050, SLT1550, SLT1554, & SLTX1050 with Kohler engines (2007-2009), RZT-L50KW, & RZT-L54KW (2013)<br>Total length: 39-5/8", conduit length: 38" | |
| **46-038** | 946-04477<br>746-04477 | **Chute 4-Way Control Cable**<br>For some two-stage snow throwers with joystick chute control (2009-2012)<br>Total length: 61-5/8", conduit length: 54" | |
| **46-039** | 946-04528B<br>946-04528A<br>746-04528B<br>746-04528A | **Chute 4-Way Control Cable**<br>For some two-stage snow throwers with joystick chute control 2009-2012<br>Total length: 62", conduit length: 54-1/4" | |
| **60-140** | 946-04556<br>746-04556 | **Choke/Throttle Cable**<br>Fits some GT, GTX, LGT, LGTX, LTX, & SLTX (2009-2013)<br>Total length: 39-5/8", Conduit length: 38" | |

C

# Control Cables

| OREGON | Replaces | Description | Product Code |
|---|---|---|---|

## Cub Cadet

| | | | |
|---|---|---|---|
| **46-041** | 946-04618B<br>946-04618A<br>946-04618<br>746-04168A | **Deck Engagement Cable**<br>For some LTX1040, LTX1042, LTX1045, LTX1046, & LTX1050 (2009-2013)<br>Total length: 60", Conduit length: 43" | |
| **60-057** | 01004020 | **Choke Cable**<br>For Z-Force mowers using Briggs & Stratton engines<br>Conduit length: 61-1/4", total length: 62-3/4" | |
| **60-056** | 02000478 | **Choke Cable**<br>Fits Z-Force 44, 48, & 50 mowers using Kohler engines<br>Conduit length: 43", total length: 44-1/2" | |
| **60-039** | 946-1085A<br>746-1085A<br>746-1085 | **Choke Cable**<br>Fits 1170, 1180, 1212, 1800, LT1042, LT1045, LT1046, & LT1050 mowers<br>Conduit length: 37", total length: 39" | |
| **60-059** | 746-04120 | **Choke Cable**<br>Fits i1046, i1050, GT1222, GT1554, SLT1550, SLT1554, LT1018, LT1022LT1024, LT1042,LT1045, LT1046, & LT1050 mowers<br>Conduit length: 40-1/2", inner wire length: 42-1/2" | |
| **60-062** | 946-04143<br>746-04143 | **Choke Cable**<br>Fits RZT22 mowers<br>Conduit length: 61", total length: 62-1/2", wire travel: 1-1/2", inner wire dia.: .062" | |
| **60-042** | 946-1100<br>746-1100 | **Throttle Cable Control Assembly**<br>Fits GT2542, GT2544, GT2550, i1046, i1050,1525, 1527, SLT1550, SLT1554, LT1042, LT1045, LT1046, & LT1050 mowers<br>Conduit length: 38", inner wire length: 40-1/2", wire travel: 1-1/2", inner wire dia.: .062" | |
| **60-021** | 946-0630A<br>746-0630A<br>746-0630 | **Throttle Wire**<br>For many riders and walk-behind mowers<br>Total length: 42" | |
| **60-014** | 946-0634<br>746-0777<br>746-0641<br>746-0636<br>746-0635<br>746-0634A<br>746-0634<br>746-0421<br>746-0419<br>746-0418 | **Throttle Wire**<br>Fits 674 & 694 series riders<br>Total length: 38" | |

C

## Cub Cadet

| OREGON | Replaces | Description | Product Code |
|---|---|---|---|
| **60-012-0** | 946-0674A<br>746-0841<br>746-0674A<br>746-0674<br>746-0672<br>746-0633<br>746-0472 | **Throttle Wire**<br>For many walk-behind mowers<br>Total length: 58" | |
| **46-006** | 946-0898<br>746-0898B<br>746-0898A<br>746-0898 | **Clutch Control Cable**<br>For many snow throwers (1995 & newer)<br>Total length: 43" | |
| **46-005** | 946-0910A<br>746-0910A<br>746-0910 | **Clutch Control Cable**<br>For many snow throwers (1995 & newer)<br>Total length: 42-1/4" | |
| **46-310** | 946-0552<br>746-0552 | **Safety Control Cable**<br>Fits S621 self-propelled mowers<br>Total length: 55-1/2" | |
| **46-320** | 946-0550<br>746-0550 | **Safety Control Cable**<br>For many walk-behind mowers (1995–2000)<br>Total length: 46-3/8" | |
| **46-321** | 946-0553<br>746-0553 | **Safety Control Cable**<br>For many walk-behind mowers (1995–1999)<br>Total length: 43-1/8" | |
| **46-317** | 946-0477A<br>746-0477A<br>746-0477 | **Safety Control Cable**<br>For many walk-behind mowers (1983–1989)<br>Total length: 51-1/2" | |
| **46-316** | 946-0554<br>746-0554 | **Safety Control Cable**<br>Fits P418 walk-behind mowers (2001)<br>Total length: 47-3/4" | |
| **60-045** | 946-0912<br>746-0912 | **Safety Control Cable**<br>For many walk-behind mowers (1993–2000)<br>Total length: 51" | |
| **46-004** | 946-0713A<br>746-0713A<br>746-0713 | **Self Propelled Control Cable**<br>For many walk-behind mowers (1999–2004)<br>Total length: 57" | |

C

# Control Cables

| OREGON | Replaces | Description | Product Code |
|---|---|---|---|

## Cub Cadet

| | | | |
|---|---|---|---|
| **60-527** | 946-04173E<br>946-04173D<br>946-04173C<br>946-04173B<br>746-04173E<br>746-04173D<br>746-04173C<br>746-04173B<br>746-04173A<br>746-04173 | **Deck Engage Cable**<br>Fits 13**7** model riders built after 2004<br>Total length 55" | |
| **60-528** | 946-04206A<br>746-04206A<br>746-04206 | **Speed Control Cable**<br>Fits 12**7** model self-propelled mowers (2008–2010)<br>Total length 79" | |

## Dixie Chopper

| | | | |
|---|---|---|---|
| **60-001** | 68250 | **Throttle Control Cable Assembly**<br>Length: 23-5/8" | |

## Excel (Hustler)

| | | | |
|---|---|---|---|
| **60-053** | 785030 | **Choke Cable**<br>For Fast Trak with 16 HP Honda engine<br>Conduit length: 61-1/4", cable length: 63-1/4", wire travel: 2" | |
| **60-054** | 786657 | **Choke Cable**<br>For Fast Trak with Briggs & Stratton engine<br>Conduit length: 48-3/8", cable length: 50-1/4", wire travel: 2-1/4" | |

## Gravely

| | | | |
|---|---|---|---|
| **60-220** | 8226 | **Throttle Control Cable Assembly**<br>Positive action, no detents, nylon knob<br>Suggested mounting: on the side of panel for tractor applications<br>Conduit size: 3/16", cable length: 48", inner wire: .060",<br>wire travel: 1-3/4" | |

## Honda

| | | | |
|---|---|---|---|
| **46-306** | 17910-VA3-S01<br>17910-VA3-003 | **Control Cable**<br>Fits HR194, HR215, & HR216, 4 and 5 HP engines<br>Aviation-style wire<br>Conduit length: 53-1/2", total length: 57" | |

C

| OREGON | Replaces | Description | Product Code | |
|---|---|---|---|---|
| **Honda** | | | | |
| **46-302** | 54510-VB5-800 | **Transmission Cable**<br>Fits all HR21 series mowers<br>Length: 50" | | |
| **46-336** | 54510-VG4-C01 | **Clutch Cable**<br>Fits models HRRK216K, HRT216K, & HRZ216<br>Conduit length: 49", total length: 57-1/2" | | |
| **46-333** | 54630-VK6-010 | **Speed Change Cable**<br>Fits models HRC216K<br>Conduit length: 40-3/4", total length: 47" | | |
| **74-016** | 54530-VG3-D01 | **Brake Cable** - NEW<br>Fits HRR216, HRS216, HRT216 | | |
| **74-018** | 54530-VK6-700 | **Brake Cable** - NEW<br>Fits HRC216K2, HRC216K3 | | |
| **John Deere** | | | | |
| **60-079** | GY20156 | **PTO Control Cable**<br>Fits L100 series tractors<br>76 inner wire including spring and eyelet<br>Conduit length: 58", wire travel: 17", inner wire dia.: .062" | | |
| **McLane** | | | | |
| **60-009** | 1013B | **Throttle Control Cable Assembly**<br>Negative action<br>For edgers equipped with Briggs & Stratton engines | | |

C

# Control Cables

## MTD

| OREGON | Replaces | Description | Product Code |
|---|---|---|---|
| **60-008** | 831-0823A<br>831-0823<br>831-0798<br>731-0823 | **Throttle Control Box** | |
| **60-016** | 811-0185<br>811-00500<br>811-00303<br>811-00185 | **Throttle Control Head**<br>Use with Oregon® 60-012, 60-013, 60-014, 46-323, or 46-324 throttle wire | |
| **60-005** | 946-0875<br>746-0875 | **Housing Only**<br>For Oregon 60-016 | |
| **60-007** | 946-0876<br>746-0876 | **Throttle Lever Only**<br>For Oregon 60-016 | |
| **60-002** | 946-0613A<br>746-0613A<br>746-0613 | **Choke Cable**<br>Fits 600 & 800 series front engine tractors (1989–1997)<br>Total length: 49-1/2", conduit length: 46" | |
| **60-003** | 946-0616A<br>746-0616A<br>746-0616 | **Choke Cable**<br>Choke control<br>For lawn tractors<br>Total length: 26-1/8", conduit length: 23-1/8" | |
| **60-124** | 746-0614A<br>746-0614 | **Choke Cable**<br>Choke control<br>For rear engine riders<br>Length: 40-3/4" | |
| **46-339** | 946-0896<br>746-0896 | **Chute Deflector Control Cable**<br>Fits 31A snow throwers (1993–2005)<br>Total length: 54-3/8", conduit length: 43-7/8" | |
| **46-044** | 946-0897A<br>946-0897<br>746-0897A<br>746-0897 | **Auger Clutch Cable**<br>For many two-stage snow throwers (1995–2012)<br>Total length: 49" | |
| **46-338** | 946-0901<br>746-0901 | **Chute Deflector Control Cable**<br>Fits 31A snow throwers (1998–2005)<br>Total length: 54-3/8", conduit length: 43-7/8" | |

C

| OREGON | Replaces | Description | Product Code | |
|---|---|---|---|---|
| **MTD** | | | | |
| **46-046** | 946-0902<br>746-0902 | **Chute Control Cable**<br>For some two-stage snow throwers (1997–2011)<br>Total length: 73", conduit length: 66" | | |
| **46-047** | 946-0903<br>746-0903 | **Chute Control Cable**<br>For some two-stage snow throwers (1997–2012)<br>Total length: 73-1/2", conduit length: 66-1/2" | | |
| **46-048** | 746-0949A<br>746-0949 | **Steering Cable**<br>For some two-stage snow throwers (1998–2012)<br>Total length: 34-7/16", conduit length: 31-7/8" | | |
| **46-341** | 946-0951A<br>746-0951A<br>746-0951 | **Auger Idler Cable**<br>Fits 31A snow throwers (1998–2014)<br>Total length: 16-5/16" | | |
| **46-340** | 746-0952 | **Drive Control Cable**<br>Fits 31A snow throwers (1998–2014)<br>Total length: 26-1/2" | | |
| **46-049** | 946-0956C<br>946-0956B<br>746-0956B<br>746-0956A<br>746-0956 | **Steering Cable**<br>For some two-stage snow throwers (1998–2012)<br>Total length: 39", conduit length: 36-1/2" | | |
| **46-050** | 746-0970 | **Deck Brake Cable**<br>For many 42" lawn tractors (2000–2004)<br>Deck lift cable<br>Fits some RZT-42 (2006 & 2008)<br>Total length: 5-7/8" | | |
| **60-041** | 946-1088<br>746-1088 | **Choke Cable**<br>Choke control for many lawn and garden tractor models<br>Total length: 24", conduit length: 23" | | |
| **60-039** | 946-1085A<br>746-1085A<br>746-1085 | **Choke Cable**<br>Choke control for many lawn and garden tractor models<br>Total length: 39", conduit length: 37" | | |

C

# Control Cables

| OREGON | Replaces | Description | Product Code |
|---|---|---|---|

## MTD

| | | | |
|---|---|---|---|
| **60-042** | 946-1100<br>746-1100 | **Throttle Control Cable Assembly**<br>Throttle control<br>Fits 800 series garden tractors with Kohler twin cylinder OHV engines<br>Total length: 40-1/2", conduit length: 38" | |
| **46-051** | 946-1130<br>746-1130 | **Safety Control Cable**<br>For many walk-behind mowers (2004–2013)<br>Total length: 54", Conduit length: 40" | |
| **60-021** | 946-0630A<br>746-0630A<br>746-0473 | **Throttle Wire**<br>Throttle wire and conduit assembly<br>For walk-behind mowers z-bend on each end<br>Conduit length: 37", total length: 42" | |
| **60-014** | 946-0634<br>746-0777<br>746-0641<br>746-0636<br>746-0635<br>746-0634A<br>746-0634<br>746-0421<br>746-0419<br>746-0418 | **Throttle Wire**<br>Fits 600-609, 660-669, 670-679, & 690-699 series tractors with twin cylinder engines, 820–829, & 840–849 series tractors,<br>Use with Oregon® 60-016 control head<br>Conduit length: 35-1/2", total length: 37-1/4" | |
| **46-319** | 946-0671A<br>746-0843<br>746-0842<br>746-0671A<br>746-0671<br>746-0642<br>746-0632<br>746-0474 | **Throttle Wire**<br>For 1992 and current mowers and self-propelled mowers with Briggs engines, z-bend on each end<br>Fits model series 086, 118, 528, 426, 456, 108, 106, 412, 518, & 236<br>Conduit length: 55-1/2", total length: 58-1/4" | |
| **46-323** | 746-0842 | **Throttle Wire**<br>For 1992 and newer push mowers with Briggs & Stratton engines, z-bend on each end<br>Use with Oregon® 60-016 control head<br>Conduit length: 55-1/4", Total length: 55-3/8" | |
| **60-012-0** | 946-0674A<br>746-0841<br>746-0674A<br>746-0674<br>746-0672<br>746-0633<br>746-0472 | **Throttle Wire – Yellow Tip**<br>Use on rear bagging and conversion style mowers (1988–1992)<br>Fits push models 116B, 166B, & 176B; self-propelled models 436B, 476B, 896B, & 886B<br>Use with Oregon 60-016 control head<br>Total length: 58" | |
| **46-006** | 946-0898<br>746-0898B<br>746-0898A<br>746-0898 | **Clutch Control Cable**<br>Fits 600 model series snow throwers 746-0898 (1995–2002) and 700 model series (2003)<br>Total length: 43" | |

C

| OREGON | Replaces | Description | Product Code |
|---|---|---|---|

## MTD

| | | | |
|---|---|---|---|
| **46-005** | 946-0910A<br>746-0910A | **Clutch Control Cable**<br>For snowblowers<br>Total length: 42-1/4", Conduit length: 35-5/8" | |
| **46-310** | 946-0552<br>746-0552 | **Safety Control Cable**<br>Fits push series 040, 050, 060, 070, 080, & 090; self-propelled series 100, 200, 400, & 700<br>Total length: 55-1/2", conduit length: 49-7/8" | |
| **46-320** | 946-0550<br>746-0550 | **Safety Control Cable**<br>Fits push models 040, 050, 060, 070, 080, & 090; self-propelled models 100, 200, 400, & 700, z-bend on each end (1985 & newer)<br>Conduit length: 40", total length: 46-3/8" | |
| **46-321** | 946-0553<br>746-0553 | **Safety Control Cable**<br>For 1991 and newer push mowers with Briggs & Statton engines, z-bend on each end<br>Conduit length: 36-7/8", cable length: 43-1/8" | |
| **46-317** | 946-0477A<br>746-0477A<br>746-0477 | **Safety Control Cable**<br>For walk-behind mowers, braided inner wire, die cast z-bend on each end<br>Conduit length: 43-1/2", total length: 51-1/2" | |
| **46-316** | 946-0554<br>746-0554 | **Safety Control Cable**<br>For walk-behind mowers, die cast z-bend on each end, braided inner wire, plastic conduit<br>Conduit length: 41-1/4", total length: 47-3/4" | |
| **60-045** | 946-0912<br>746-0912 | **Safety Control Cable**<br>For walk-behind mowers, braided inner wire with die cast Z-bend on each end<br>Conduit length: 44-3/4", total length: 51" | |
| **46-004** | 946-0713A<br>746-0713A<br>746-0713 | **Self-Propelled Cable**<br>For 21" walk-behind mowers<br>Z-bend on each end<br>Overall length: 57", total length: 53" | |
| **46-337** | 946-04007<br>746-04007 | **Auger Control Cable**<br>Fits 31A snow throwers (2004–2010)<br>Total length: 48-13/16", conduit length: 35-1/4" | |
| **46-342** | 946-04008<br>746-04008 | **Drive Control Cable**<br>Fits 31A snow throwers (2004–2010)<br>Total length: 50-5/8", conduit length: 33-11/16" | |

C

# Control Cables

| OREGON | Replaces | Description | Product Code |
|---|---|---|---|

## MTD

| | | | |
|---|---|---|---|
| **60-527** | 946-04173E<br>946-04173D<br>946-04173C<br>946-04173B<br>746-04173E<br>746-04173D<br>746-04173C<br>746-04173B<br>746-04173A<br>746-04173 | **Blade Engage Cable**<br>Fits 13**7** model riders (2004 & newer)<br>Length 55" | |
| **60-528** | 946-04206A<br>746-04206A<br>746-04206 | **Speed Control Cable**<br>Fits 12**7** model self-propelled mowers (2008–2010)<br>Length 79" | |
| **73-802** | 746-04228A | **Speed Selector Cable** - NEW<br>For most MTD snow throwers<br>Length: 23" | |
| **73-800** | MTD 746-04396 | **Speed Selector Cable** - NEW<br>Length: 21.5" | |
| **74-020** | MTD 946-0957 | **Control Cable** - NEW<br>For most MTD push mowers<br>Conduit length: 37-1/4" | |
| **46-032** | 946-04229B<br>946-04229<br>746-04229B<br>746-04229 | **Drive Clutch Cable**<br>For many two-stage snow throwers (2005-2012)<br>Total length: 45-1/2" | |
| **46-033** | 946-04230A<br>946-04230<br>746-04230A<br>746-04230 | **Auger Clutch Cable**<br>For many two-stage snow throwers (2005-2012)<br>Total length: 48" | |
| **46-034** | 946-04236<br>746-04236 | **Auger Clutch Cable**<br>For many two-stage snow throwers (2005–2012)<br>Total length: 48", conduit length: 23-1/2" | |
| **46-035** | 946-04237<br>746-04237 | **Clutch Control Cable**<br>For many single-stage snow throwers (2005–2010)<br>Total length: 42", Conduit length: 26" | |
| **46-036** | 946-04256<br>746-04256 | **Traction Drive Cable**<br>For many two-stage snow throwers (2005-2008)<br>Total length: 52-1/4", conduit length: 35-1/4" | |

C

| OREGON | Replaces | Description | Product Code |
|---|---|---|---|

## MTD

| | | | |
|---|---|---|---|
| **60-137** | 946-04352A<br>946-04352<br>746-04352A<br>746-04352 | **Throttle Control**<br>Fits RZT-L50KW & RZT-L54KW (2013)<br>Total length: 39-5/8", conduit length: 38" | |
| **46-038** | 946-04477<br>746-04477 | **Chute 4-way Control Cable**<br>For some two-stage snow throwers<br>with joystick chute control (2009–2012)<br>Total length: 61-5/8", Conduit length: 54" | |
| **46-039** | 946-04528B<br>946-04528A<br>746-04528B<br>746-04528A | **Chute 4-way Control Cable**<br>For some two-stage snow throwers<br>with joystick chute control (2009–2012)<br>Total length: 62", conduit length: 54-1/4" | |
| **60-140** | 946-04556<br>746-04556 | **Choke/Throttle Cable**<br>Fits some 13AR91PP & 13AR91PS (2010)<br>Total length: 39-5/8", conduit length: 38" | |
| **46-041** | 946-04618B<br>946-04618A<br>746-04618A<br>746-04618 | **Deck Engagement Cable**<br>Fits some 13AX90YT, 13AX915T, 13AX915T, 13AT915T, 13AV90GS,<br>13AX915T, 13AP91GS, 13AP91GT, & 13AQ91GP (2010-2013)<br>Total length: 60", conduit length: 43" | |
| **74-019** | MTD 946-04092<br>MTD 746-04092 | **Deck Engagement Cable - NEW**<br>Use with MTD riding mowers<br>Conduit length: 26", inner wire length: 43" | |
| **46-042** | 946-04640<br>746-04640 | **Auger Cable**<br>For some two-stage snow throwers (2009-2012)<br>Total length: 61-5/8", conduit length: 23" | 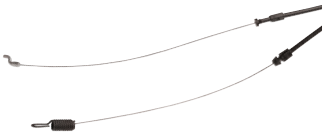 |
| **46-043** | 946-04642A<br>946-04642<br>746-04642A<br>746-04642 | **Traction Drive Clutch Control Cable**<br>For some two-stage snow throwers (2009-2012)<br>Total length: 52", conduit length: 36" | |

## Murray

| | | | |
|---|---|---|---|
| **60-522** | 21223PA | **Throttle Control Cable Assembly**<br>Plastic covered, positive action control, z-bend, no detents<br>Conduit size: 3/16", conduit length: 60", inner wire: .054",<br>wire travel: 1-5/8" | |

C

# Control Cables

| OREGON | Replaces | Description | Product Code | |
|---|---|---|---|---|
| **Murray** | | | | |
| **60-025-0** | 1101093 | **Stop Cable**<br>For 20" walk-behind mower from (2000–2003)<br>3/16" z-bend one end, 1/4" T on other end<br>Conduit length: 44", inner wire length: 50" | | |
| **60-026-0** | 1101181 | **Stop Cable**<br>For 20" and 22" walk-behind mowers (2001–2002)<br>3/16" z-bend one end, 1/4" T on other end<br>Conduit length: 45-1/4" | | |
| **60-030-0** | 1101360 | **Stop Cable**<br>For 20" walk-behind mowers with rear bagger (2001–2003)<br>3/16" z-bend one end, 1/4" T on other end<br>Conduit length: 42-1/2", inner wire length: 48-3/4" | | |
| **60-031-0** | 1101366 | **Stop Cable**<br>For 22" walk-behind mowers with rear bagger (2001–2003),<br>3/16" z-bend on each end<br>Conduit length: 52", inner wire length: 59-1/4" | | |
| **60-043** | 175441X428 | **Choke Control Cable**<br>For many lawn and garden tractor models<br>Overall length: 44", conduit length: 42" | | |
| **60-032-0** | 672835 | **Stop Cable**<br>For walk-behind mowers with Tecumseh engines (2000–2003),<br>3/16" z-bend one end, 1/4" T on other end<br>Conduit length: 52-1/4", inner wire length: 59-1/4" | | |
| **60-033-0** | 672840 | **Stop Cable**<br>For walk-behind mowers (2000–2003), 3/16" z-bend one end,<br>1/4" T on other end<br>Conduit length: 42-1/2", inner wire length: 50" | | |
| **60-006** | 740194 | **Throttle Control Cable Assembly**<br>For walk-behind trimmer mowers<br>Overall length: 49", conduit length: 44" | | |
| **60-015** | 776113 | **Choke Control Cable**<br>Overall length: 51-3/4" | | |

C

| OREGON | Replaces | Description | Product Code |
|---|---|---|---|

## Murray

| | | | |
|---|---|---|---|
| **60-420** | 420005 | **Throttle Control Cable Assembly**<br>For most Murray walk-behind mowers (1985 & newer)<br>Plastic conduit, converts from positive to negative action<br>Use with Oregon® 04-304 (OBS) mounting adapter<br>Conduit size: 3/16", conduit length: 50", inner wire: 53-1/2", wire travel: 1-5/8" | |
| **60-427** | 420005 | **Throttle control**<br>Heavy-duty version of Oregon 60-420<br>Fits most Murray walk-behind mowers<br>Metal conduit, converts from positive to negative action (1985 & newer)<br>Use with Oregon 04-304 (OBS) mounting adapter<br>Conduit size: 3/16", conduit length: 50", inner wire: 53-1/2", wire travel: 1-5/8" | |
| **46-300** | 42569 | **Engine Kill Control Cable**<br>For "zone start" mowers, one bolt mounting<br>Length: 53", throw: 7-1/2" | |
| **46-315** | 43827 | **Engine Stop Cable**<br>For walk-behind mowers, z-bend on one end, T form on the other end<br>Conduit length: 49-1/2", inner wire length: 57-7/8" | |
| **46-327** | 43828 | **Engine Stop Cable**<br>For 22" walk-behind mowers. braided cable with die cast z-bend on one end, T form on other end<br>Conduit length: 40", inner wire length: 48-1/2" | |
| **46-328** | 43881 | **Safety Control Cable**<br>Braided wire with die cast z-bend on one end and T form on the other end<br>Conduit length: 46", inner wire length: 54-3/4" | |

## Scag

| | | | |
|---|---|---|---|
| **60-380** | 481071 | **Throttle Control Cable Assembly**<br>For hydrostatic mowers, positive action<br>Conduit size: 3/16", conduit length: 41-1/4", inner wire: .060", inner wire length: 44-1/8", wire travel: 1-3/4" | |
| **60-123** | 481091 | **Choke Cable**<br>Fits STHM20KH hydrostatic mower<br>Conduit length: 41", inner wire length: 43-1/4" | |

C

# Control Cables

| OREGON | Replaces | Description | Product Code |
|---|---|---|---|

## Scag

| | | | |
|---|---|---|---|
| **60-028** | 481662 | **Throttle Control Cable Assembly**<br>For Kawasaki engine, z-bend on one end<br>Inner wire length: 70", inner wire dia.: .060", wire travel: 1-1/2" | |
| **60-125** | 48780 | **Choke Cable**<br>Push-pull design<br>Conduit length: 55", inner wire length: 58-3/8" | |
| **60-027** | 48946 | **Throttle Control Cable Assembly**<br>T-handle, z-bend<br>Conduit length: 54-1/2", inner wire length: 57-1/2",<br>inner wire dia.: .060" | |
| **46-416** | 48828 | **Steering Cable**<br>Fits ST17KA & 19KH<br>5/16" barrel on each end<br>Length: 67-5/8", thread End: 3/8-24, cable diameter: .130" | |

## Snapper

| | | | |
|---|---|---|---|
| **60-991** | 7011991<br>11991<br>1-1991 | **Throttle Control Cable Assembly**<br>Positive action control, no detents<br>For 26" and 30" rear engine riders series 1, 2, and 3 with steering column mount – Briggs & Stratton engines<br>Conduit size: 3/16", conduit length: 50", inner wire: .060",<br>wire travel: 1-5/8" | |
| **60-061** | 7012061<br>7011130<br>12061<br>11130<br>1-2061<br><br>1-1130 | **Throttle Control Cable Assembly**<br>Positive action control, no detents<br>For 26" and 30" rear engine 7012061 riders series 1, 2, and 3 with steering column mount – Tecumseh engines<br>Conduit size: 3/16", conduit length: 55", inner wire: .060" (galvanized),<br>wire travel: 1-3/8" | |
| **60-188** | 7018188<br>18188<br>1-8188 | **Throttle Control Cable Assembly**<br>Heavy-duty, commercial size, positive action control<br>For walk-behind mowers 21" commercial (1987 & earlier) – Briggs & Stratton engines<br>Conduit size: 7/32", conduit length: 49", inner wire: .072" (galvanized), wire travel: 1-5/8" | |
| **60-201** | 7018201<br>18201<br>1-8201 | **Throttle Control Cable Assembly**<br>Heavy-duty, black plastic head with red thumb knob, z-bend<br>For 18" & 21" aluminum deck series 2 with Honda engine<br>Conduit size: 7/32", conduit length: 49", inner wire: .072",<br>wire travel: 1-3/4" | |

C

| OREGON | Replaces | Description | Product Code |
|---|---|---|---|

## Snapper

| | | | |
|---|---|---|---|
| **60-240** | 7019254<br>19254<br>1-9254 | **Throttle Control Cable Assembly**<br>Heavy-gauge steel construction, detents, choke position, polyethylene covered. For 21" aluminum and steel deck series 7, 20" series 0 with<br>Briggs & Stratton, Robin engines<br>Conduit size: 3/16", conduit length: 45", overall length: 47-1/4", inner wire: .054", wire travel: 2-1/4" | |
| **60-353** | 7018889<br>7018486<br>7018353<br>18889<br>18486<br>18353<br>1-8889<br>1-8486<br>1-8353 | **Throttle Control Cable Assembly**<br>Negative action control, z-bend, detents, all steel, polyethylene liner<br>For series 4, 5, and 6 riders on rear engine riders, series 6 extra tough models with Briggs & Stratton, Tecumseh engines<br>Conduit size: 3/16", conduit length: 12-1/2", overall Length: 15", inner wire: .054", wire travel: 1-1/2" | |
| **60-786** | 7060916<br>7019175<br>60916<br>19175<br>6-0916<br>1-9175 | **Throttle Control**<br>Heavy-duty replacement for Oregon® 60-785<br>Conduit size: 1/4", conduit length: 45-1/2", inner wire dia.: .072", wire travel: 1-3/8" | |
| **46-024** | 7012425<br>12425<br>1-2425 | **Brake Cable**<br>For series 1-5, 25"–30" riders<br>1/4" barrel on one end, 3 adjustment spacers<br>Length: 52" | |

## Toro

| | | | |
|---|---|---|---|
| **46-334** | 74-1791 | **Traction Control Cable**<br>Fits mower models: 22030, 22035, & 22036 (1991), 22037B (1993–1995), 22038 (1999–2003), 22040 (1991–2003), 22141 (1997), 22150 (1995–1996), 22158 (1999–2000), 22161 (1998–2001), 22167 (2003–2007), 22171 (1999–2003), 22174 (2001–2003), 22176 (2004–2010), 22187 (2007–2013), 22190 (2007–2010), 22195 (2007–2013), 22197 (2010–2013), 22621 (1991), 22622 (1991–1992), 22700 (1991–1995), & 22701 (1996–1997)<br>Conduit length: 35", total length: 43-1/2" | |
| **46-335** | 84-9120 | **Traction Control Cable**<br>Fits recycler mower models: 22043 (1992–2003), 22045 (1996–2003), 22142 (1997), 22151 (1992–1996), 22154 (1996–1997), 22157 (1998–2003), 22162 (1998–2001), 22168 (2004–2007), 22172 (1999–2003), 22173 (2000–2003), 22177 (2004–2010), 22188 (2007–2013), 22191 (2007–2009), 22196 (2007–2013), & 22198 (2010–2013)<br>Conduit length: 31", total length: 37" | |

C

# Control Cables

| OREGON | Replaces | Description | Product Code |
|---|---|---|---|

## Toro

| | | | |
|---|---|---|---|
| **46-332** | 103-2683 | **Brake Cable**<br>Fits models: 21" heavy-duty recycler/rear bagger lawn mowers 22167, 22176, 22187, & 22190 (2003–2007)<br>Conduit length: 62-1/2", total length: 68" | |
| **74-015** | 104-8676 | **Brake Cable** - NEW<br>For Toro 22" recycler, (2002–2009)<br>Cable length: 58", conduit length: 53-1/2" | |
| **60-529** | 105-1844 | **Traction Cable**<br>For 22" recycler self-propelled mowers (2002–2008) with Personal Pace<br>Length: 46-1/2" | |
| **60-530** | 105-1845 | **Traction Cable**<br>For 22" recycler self-propelled mowers (2002–2009) without Personal Pace<br>Length: 67-1/2" | |
| **60-428** | 106-0888 | **Throttle Cable**<br>Fits models: 21" heavy-duty recycler/rear bagger lawn mower 22167, 22175, 22176, 22187, 22190, 22195, & 22197 (2003–2013)<br>Conduit length: 52-1/2", total length: 56" | |
| **60-531** | 106-8300 | **Traction Cable**<br>Fits 21" Super Recycler self-propelled mowers (2003–2005) with Personal Pace | |

## Wisconsin

| | | | |
|---|---|---|---|
| **60-687** | VE527W | **Push Pull Control**<br>T-handle lock, made by OEM supplier<br>For THD, TJD, & VH4D series engines | |

## Push-Pull Controls

| | | | |
|---|---|---|---|
| **60-184** | | **Push-Pull Control**<br>Max. push load: 10 lb., max. pull load: 25 lb., suggested mounting–panel, locking type, versatile locking control eliminates vibration problems and enables the user to adjust for desired friction, light-duty<br>Conduit size: 3/16" (galvanized), conduit length: 92-1/2", overall Length: 102", inner wire dia.: .060" | |

C

## Push-Pull Controls

**60-122**

**Push-Pull Control**
Max. push load: 10 lb., max. pull load: 25 lb., suggested mounting: panel, economical dash control for choke, throttle, and other light-duty applications, easy to install, light-duty Installation hole: 13/32" diameter, conduit size: 3/16" (galvanized), overall length: 96", inner wire dia.: .060"

**514371** — **Blister Pack** - 1 of 60-122

**60-100**

**Push-Pull Control**
Max. push load: 20 lb., max. pull load: 50 lb., suggested mounting: panel, a heavy-duty non-rotational locking control for a variety of industrial uses, by turning T-knob 1/4 turn, locks securely against spring tension and vibration Conduit size: 1/4" (galvanized), overall length: 104", inner wire dia.: .080"

## Conduit/Inner Wire/Assemblies

| OREGON | Size | Length | Type | Product Code |
|---|---|---|---|---|
| 74-732 | 7/32" | 50 ft. roll | Standard galvanized conduit<br>For use with SOLID wire | |
| 74-317 | 3/16" | 50 ft. roll | Plastic lined and covered conduit<br>Extra smooth on the inside, protected on the outside. For use with solid wire or stranded cable. | |
| 74-054 | .054" | 100 ft. | Galvanized inner wire<br>Solid Wire (not for use on motorized vehicles) | |
| 74-072 | .072" | 100 ft. | Galcanized inner wire<br>Solid Wire (not for use on motorized vehicles) | |

**74-316**

**74-054**

## Conduit Buttons

| OREGON | Description | Product Code |
|---|---|---|
| 02-101 | For 7/32" conduit<br>Threaded to attach conduit housing to head assembly quickly and easily | |

## Throttle Wire Z-Bender

| OREGON | Description | Product Code |
|---|---|---|
| 42-455 | Makes wire bending simple, fast and easy<br>For use with .054" and .072" throttle control inner wire. Takes only seconds for a perfect z-bend. Instructions included with each package. | |

C

# Control Cables

## Throttle Accessories

**46-200** **Twist Grips – Pair**
Throttle assembly with dummy grip (LH), fits 7/8" tubing

| OREGON | Description | Inner Cable | Outer Conduit | Product Code |
|---|---|---|---|---|
| **Mini Bike Throttle Cables** | | | | |
| 60-048 | 3/16" ball | 53" | 48" | |
| 60-065 | 3/8" barrel | 60" | 55" | |
| 60-060 | 3/16" barrel | 65" | 60" | |
| 60-092 | 3/16" ball | 100" | 62" | |

## Mini Bike Cables

| OREGON | Inner Cable | Outer Casing | End | Product Code |
|---|---|---|---|---|
| **Throttle Cables** | | | | |
| 60-048 | 53" | 48" | 3/16" ball | |
| 60-060 | 65" | 60" | 3/16" barrel | |
| 60-092 | 100" | 92" | 3/16" ball | |
| **Brake Cable** | | | | |
| 60-065 | 60" | 55" | 3/8" barrel | |

## Cable Clips

| OREGON | Fits Tubing | Description | Product Code |
|---|---|---|---|
| 02-103 | 1" | Zinc plated | |

## Wire Swivel

| OREGON | Fits Tubing | Description | Product Code |
|---|---|---|---|
| 02-099 | 1/4" | Fits 1/4" diameter hole. Holds up to .090" wire. Plated. Complete with screw and washer (sold only in sets) | |

## Swivel Stops

| OREGON | Fits Tubing | Description | Product Code |
|---|---|---|---|
| 02-098 | 1/4" | Used to secure the control inner wire at the engine end. Will accommodate all wire sizes up to .090" diameter. Plated | |

C

## Conduit Clips

| OREGON | Description | Product Code |
|---|---|---|
| 02-107 | Single clip<br>Use on all small engines. Holds conduit to engine. Non-rotating special metal tab. Conduit held securely with screw attached to flat surface. | |
| 02-106 | Dual clips, zinc plated<br>Ideal for securing two conduits with one bolt. Accepts 3/16" through 7/32" conduits. Use #10 or #12 bolt. | |
| 46-304 | Conduit clips<br>Fits Honda GX110, GX120. GX140, GX160, GX240, GX270, GX340, & GX390 series engines. Replaces Honda 16576-891-000. | |
| 02-115 | Bolt on clips, zinc plated<br>For clamping throttle control to Briggs & Stratton engines. Replaces Toro 77-8280 | |

| OREGON | Bolt | Conduit Size | Product Code |
|---|---|---|---|
| 02-108 | #8 – #10 | 3/16" | |
| 02-111 | 1" | 7/32" | |

Squeeze type, zinc plated

## Cable Zip Ties

| OREGON | Description | Product Code |
|---|---|---|
| 02-017 | 50-pack of #02-000 nylon tie<br>Cable tie length: 8" | |

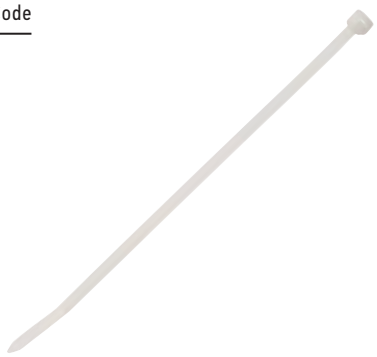

## Throttle Accessories

| OREGON | Qty. | Description | Product Code |
|---|---|---|---|
| – | – | Throttle accessories | |

### Components

| | | |
|---|---|---|
| – | 20 | Cable clip |
| – | 10 | Cable clip |
| 02-115 | 10 | Cable clip |
| 02-099 | 20 | Wire swivel |
| 02-098 | 20 | Wire swivel |
| 02-108 | 10 | Conduit clip |
| 02-111 | 10 | Conduit clip |
| – | 10 | Conduit clip |
| 02-106 | 10 | Conduit clip |
| 02-107 | 10 | Conduit clip |

C

# Drive Parts

| OREGON | Replaces | Description | Product Code |
|---|---|---|---|

## Damper Cylinders

| | | | |
|---|---|---|---|
| **48-233** | Cub Cadet 02003622 | **Damper Cylinder – Return to Neutral**<br>Fits models ENFORCER 44, ENFORCER 48, ENFORCER 54, Z-Force 44, Z-Force 48 , Z-Force 50, Z-Force 54, Z-Force 60, Z-Force Pro 48, & Z-Force Pro 54 | |
| **48-232** | Exmark 116-0027 | **Damper Cylinder – Motion Control**<br>Fits models Next Lazer ASX (S/N 850,000 & up), & Next Lazer Z air cooled (S/N 790,000 & up)<br>Threaded studs: 5/16"-18 (both ends)<br>Extended length: 13", closed length: 9-1/2" | |
| **48-236** | Exmark 109-2339<br>Exmark 1-523027 | **Damper Cylinder – Motion Control**<br>Fits models Lazer Z AS (S/N 790,000–849,999), LZE20KA484, LZE22KA484, LZE24KA524, LZE27KC604, LZS22KA48, LZS23KC524, LZS24KA524, LZS25EKC604, LZE730KA604, LZE740EKC604, LZE740KC604, LZS651KA484, LZS680KC524, LZS691KA524, LZS730EK, LZX24KA526, LZX27KC526, LZX27KC606, LZX29EKC606, LZX29KA606, LZX34KC606, LZX34KC726, LZS27KC604, LZS29EKC, LZS29KA724, LZS29PKA604, LZS29PKA606, LZS29PKA724, LZX23KC486, LZS25KC604, LZS27KC524, LZX38KC606, LZX38KC726 (S/N 920,000 & up), LZE600KA484, LZE691KA524, LZE730EKC604, LZS740KC524, LZS740KC604, LZS740PKA604, LZS740PKA724, LZS749EKC604, LZS749EKC724, LZS801KA524, LZS801KA604, LZS801KA724 , LZS801PKA604, LZS801PKA724, LZX680KC486, LZX740EKC526, LZX740KC526, LZX740KC606, LZX749EKC606, LZX801KA606, LZX940EKC606, LZX940KC606, LZX940KC726, LZX980EKC726, LZX980KC606, LZX980KC726 (S/N 312,000,000 & up)<br>Hole diameter: 5/16" (both ends), extended length: 10", closed length: 7" | |

## Hydrostatic Drive System – Wheel Motors

| | | | |
|---|---|---|---|
| **27-500** | Exmark 1-523328<br>Exmark 103-6988<br>Parker TF0240US081AADD | **Wheel Motor**<br>Replaces Parker wheel motor<br>Fits models LAZER Z & LAZER Z HP serial 440,000 to 509,999 | |
| **27-501** | Exmark 1-603718<br>Parker TE0230FS250AAFA<br>Parker TE0230FS250AADD | **Wheel Motor**<br>Replaces Parker wheel motor<br>Fits models TURF TRACER, TRACER XP, & VIKING | |
| **27-503** | Parker TE0230US250AA<br>Encore 453068 | **Wheel Motor**<br>Replaces Parker wheel motor.<br>Fits Encore walk-behinds, Encore Prowler Front Cut, Toro, & Husqvarna | |

D

| OREGON | Replaces | Description | Product Code |
|---|---|---|---|

## Hydrostatic Drive System – Wheel Motors

**27-502**
Parker TF0240LS080AAFB
Scag 482639
Scag 481529

**Wheel Motor**
Replaces Parker wheel motor
Fits Wildcat, Turf Tiger, & Tiger Cub

**27-504**
Hydro-Gear HGM-15E-3138
Scag 483190
Hustler 600922
Ferris 5100407

**Wheel Motor**
Replaces Hydro-Gear wheel motor
Fits Scag Tiger Cub, Turf Tiger, Wildcat, & Z Cat,
Ferris IS1500ZX & IS200Z (15IN3/REV – LH), & Hustler

## Steel Plate Sprocket

| OREGON | Teeth | Chain Size | Description | Product Code |
|---|---|---|---|---|
| 48-051 | 54 | #41 | For use on go-karts<br>OD: 8-7/8" | |
| 48-048 | 60 | #35 | 2" center hold with 8 bolt holes<br>OD: 7-3/8" | |
| 48-049 | 72 | #35 | 2" center hold with 8 bolt holes<br>OD: 8-3/4", four-bolt pattern with 2" & 2-1/2" c-c | |

## Sprocket Idlers

| OREGON | Teeth | Chain Size | Chain Bore | OD | Product Code |
|---|---|---|---|---|---|
| 34-810 | 10 | #40, 41 | 3/8" | 1-7/8" | |

## Gears

**51-225**
Honda 42661-VE2-800

**Pinion Gear – 12-Tooth**
Fits HRB215SXA, 215HXA, 215SDA, 216HXA, 216TDA, 216TXA, 217HXA, 217TDA, HRM215SXA, 215SDA, 215HXA, HRR216SDA, 216TDA, 216TKA, 216VKA, 216VYA, HRS216SDA, 216SKA, HRT216SDA, & 216TDA models

**51-013**
Toro 39-9160

**Pinion Gear – 15-Tooth**
For 21" commercial self-propelled mowers, also fits 21" rear drive residential mowers

D

# Drive Parts

| OREGON | Replaces | Description | Product Code |
|---|---|---|---|

## Drive Rachet Holder

| | | | |
|---|---|---|---|
| **51-223** | Honda 23510-VB5-803<br>Honda 23510-VB5-801 | **Right-Hand Rachet Holder**<br>Fits HR194, 195SXA, 214SMA, 214SXA, 215HMA, 215HAX, 215SXA, 216SXA, HRA214SAX, 215SXA, 216SXA, HRC215SDA, 215SXA, 216HXA, & 216SXA models | |
| **51-224** | Honda 23520-VB5-803<br>Honda 23520-VB5-801 | **Left-Hand Rachet Holder**<br>Fits HR194, 195SXA, 214SMA, 214SXA, 215HMA, 215HAX, 215SXA, 216SXA, HRA214SAX, 215SXA, 216SXA, HRC215SDA, 215SXA, 216HXA, & 216SXA models | |

## Brake Pad

| | | | |
|---|---|---|---|
| **76-110** | Tecumseh 799021 | **Brake Pad** | |

## Drive Discs

| | | | |
|---|---|---|---|
| **76-067-0** | Ariens 3003<br>Bolens 1720859<br>Case 2289<br>Gilson 32222<br>Gilson 18915<br>Jacobsen 158458<br>John Deere AM122115<br>Lawn Boy 741316<br>Snapper 1-0765<br>Troy-Bilt 1720859 | **Drive Disc**<br>For Snapper rear engine riders, large frame snow throwers, tractor with standard drive, rear tine tillers (RTS, RTB)<br>OD: 6", ID: 5-3/8" | |
| **76-002** | | **Brake Lining**<br>Use with Oregon® 76-067 drive disc<br>For smooth clutch model Snappers<br>Length : 16-3/8", width: 3/4", height: 1/8"<br>Non-asbestos | 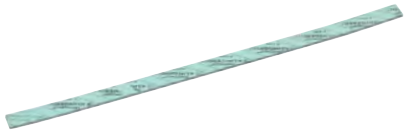 |
| **76-014** | Snapper 5-3103/5-7423 | **Drive Disc Kit with Drive Liner**<br>Contains Oregon 76-067 (1) & 76-002 (1) | |
| **76-070-0** | Ariens 22013<br>John Deere AM12355<br>Noma 53830<br>Noma 1325<br>Noma 9005383<br>Noma 313883 | **Drive Disc**<br>For self-propelled mowers<br>Fits Ariens 911000 series, Noma 30, 23, & 25 snow throwers<br>OD: 4.4", rim ID: 3.715", mounting holes: .268" | |
| **76-073-0** | MTD 05080A | **Friction Wheel**<br>Fits snow thrower models 550, 586, 440, 450, 552, 588, 840, 850, 960, & 852<br>OD: 6" | |

D

| OREGON | Replaces | Description | Product Code |
|---|---|---|---|

## Drive Ring

| | | | |
|---|---|---|---|
| **51-001-0** | Snapper 1-0927<br>Snapper 2-3364 | **Drive Ring – Rubber**<br>For self-propelled mowers, all 21P series | |
| **76-075** | MTD 935-0243B | **Drive Ring – Rubber**<br>Fits self-propelled snow throwers (1992–2005)<br>OD: 5", ID: 4", width: 1/2" | |
| **76-076** | Husqvarna 532179831 | **Drive Ring – Rubber**<br>Fits many snow throwers (2002 & newer)<br>OD: 4-1/2", ID: 3-3/4", width: 1/2" | |

## Straight Keys

| OREGON | Size | Length | Product Code |
|---|---|---|---|
| 80-036 | 3/16" sq. | 12" | |
| 80-014 | 1/4" sq. | 12" | |
| 80-037 | 3/16" sq. x 3/4" L | 3/4" | |

## Snapper Drive Parts

| | | | |
|---|---|---|---|
| **51-000** | 5-7444<br>5-3225 | **Disc Assembly Kit**<br>For self-propelled mowers<br>Complete drive assembly<br>Use with Oregon® 45-000 or 45-010 bearing &<br>Oregon 51-001 drive ring | |
| **51-011** | 6-1276<br>5-1616<br>5-1460 | **Hub, Ring and Plastic Bushing**<br>Use with Oregon 51-001 drive ring | |
| **51-222** | 6-0710<br>61275 | **Disc Drive Assembly**<br>Assembly includes bushings for 21" self-propelled walk-behind<br>Use with Oregon 51-101 & 51-102<br>Plate Dia.: 4-3/4", pulley dia.: 3" | |
| **45-110** | 1-1024 | **Oil Filter Plug**<br>For transmissions on riders & tractors | |

D

# Drive Parts

| OREGON | Replaces | Description | Product Code |
|---|---|---|---|

## Snapper Drive Parts

| | | | |
|---|---|---|---|
| **41-005** | 2-3744<br>2-1745 | **Hex Shaft**<br>Fits 21" self-propelled walk-behind<br>Hex L: 6-3/4", overall length: 8-1/4", hex: 1/2",<br>thread: 3/8"-24 | |
| **80-745** | 1-1035 | **Hub Bolt**<br>For left-hand side, tapered head, rear hubs on rear engine rider<br>Use with Oregon® 76-006<br>Length: 1-5/8", thread: 5/16"-24 | |
| **49-018** | 1-4523 | **Thrust Washer**<br>Use between disc and plate on smooth clutch assembly<br>series 6 and up | |

## Lubricant and Grease

| | | | |
|---|---|---|---|
| **49-010** | 1-1050 | **"00" Grease**<br>9 oz. bottle<br>12 tubes per case | |
| **49-015** | | **"0" Grease**<br>4-1/2" oz. tube<br>12 tubes per case | |

## Brake Disc

| | | | |
|---|---|---|---|
| **44-364** | MTD 09322 | **Spindle Brake Disc**<br>Fits models series 600, 805, 800, 739, & 750-769<br>For drive pulley on 38" and 42" models | |

D

| OREGON | Replaces | Description | Product Code |
|---|---|---|---|

## Relay Switches

| | | | |
|---|---|---|---|
| **33-317-0** | AYP 109748<br>Husqvarna 532109748<br>Gravely 040216<br>Ariens 03042800 | **Relay Switch**<br>For many riders including Great Dane, John Deere, Encore, & Grasshopper | |
| **33-318-0** | Helga ID 93180 01 | **Relay Switch**<br>Fits Husqvarna ZTH & Country Clipper zero turn radius models | |
| **33-319-0** | Bosch 0332 209-150 | **Relay Switch**<br>Fits Husqvarna ZTH & John Deere ZTRAK models | |
| **33-242** | MTD 925-1648<br>MTD 725-1648 | **Relay Switch**<br>For lawn mowers & garden tractors (1992–2000) | |

## Solenoids

| | | | |
|---|---|---|---|
| **33-431** | | **Solenoid**<br>4 post with dual mounting bracket<br>Terminal post and sleeve will accept both 1/4" and 5/16" teminal ends. External ground includes spade converters.<br>15% duty<br>200 amp capacity | |
| **33-430** | | **Solenoid**<br>3 post with dual mounting bracket<br>Terminal post and sleeve will accept both 1/4" and 5/16" teminal ends. Internal ground includes spade converters.<br>15% duty<br>200 amp capacity | |
| **33-330** | AMF 53716<br>AMF 52323<br>Ariens 3057700<br>Bolens 1751569<br>Noma 424285<br>Noma 52323<br>Noma 53716<br>Wheel Horse 111674 | **Solenoid**<br>5/16" diameter bolts , 3 post<br>Internal ground with screw terminal<br>50% duty<br>80 amp capacity<br>Includes new spade converter | |

E

# Electrical Parts

## Solenoids

| OREGON | Replaces | Description | Product Code |
|---|---|---|---|
| **33-334** | Ariens 35510<br>Bolens 1752137<br>Bolens 1753539<br>Gilson 212655<br>Grasshopper 184251<br>Gravely 45071<br>Lawn Boy 740207<br>Simplicity 1700751<br>Snapper 1-8604<br>Wheel Horse 110162<br>AYP 146154<br>AYP 109946<br>AYP 109081X<br>Roper 109946<br>Roper 109081X | **Solenoid — 4-Pole Style**<br>1/4-20 studs<br>50% duty<br>External ground<br>80 amp capacity<br>Includes new spade converter<br><br>Toro 47-1910<br>Toro 47-1910<br><br>**NOTE:**<br>The OEM AYP 146154 is a kit to replace both 3 post and 4 post solenoids using jumper wires.<br>Oregon® 33-331 is the three post solenoid<br>Oregon 33-334 is the four post solenoid | |
| **33-331** | Murray 24285<br>Murray 21261<br>Murray 424285 | **Solenoid**<br>1/4" diameter bolts, 3 post<br>Internal ground with screw terminal<br>50% duty<br>80 amp capacity<br>Includes new spade converter | |
| **33-332** | Snapper 1-9544<br>Gravely 7277 | **Solenoid**<br>5/16-24 studs, 3-pole style,<br>12 volt, grounded base | |
| **33-336** | Exmark 513075 | **Solenoid**<br>5/16" large posts , 3/16" small posts<br>Externally grounded | |
| **33-335** | MTD 725-1426<br>Snapper 1-8817 | **Solenoid**<br>90° mount , 3 post<br>Slide connector terminal<br>1/4" diameter bolt<br>50% duty, 80 amp capacity<br>MTD (1990 & newer) | |
| **33-337** | MTD 725-0771 | **Solenoid**<br>90° mounting bracket, 1/4"-20 studs<br>Exact match for all MTD models (1985–1991) | |

E

| OREGON | Replaces | Description | Product Code |
|---|---|---|---|

## Voltage Regulators

| | | | |
|---|---|---|---|
| **33-320-0** | Briggs & Stratton 295924<br>Delco 1118988<br>Jacobsen 107927<br>John Deere AM30078<br>Lauson 32089<br>Tecumseh 32089 | **Voltage Regulator**<br>For starter generators | |
| **33-247** | Briggs & Stratton 397809 | **Voltage Regulator**<br>For quad circuit 8, 10, 13, or 16 amp charging systems<br>Fits series engines 252700, 253700, 280700, 281700, 404400, & 422700 | 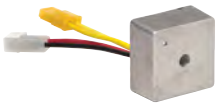 |
| **33-402** | Briggs & Stratton 691185<br>Briggs & Stratton 394890<br>Briggs & Stratton 797375<br>Briggs & Stratton 393374 | **Voltage Regulator**<br>For 18–20 HP engines with 10, 13, 14, & 16 amp charging systems | |
| **33-417** | Briggs & Stratton 491546<br>Briggs & Stratton 691188<br>Briggs & Stratton 794360 | **Voltage Regulator**<br>For 5 & 9 amp charging systems<br>Fits 256400, 280700, 351447, 351777, & 42A700 series engines | |
| **33-418** | Briggs & Stratton 493219 | **Voltage Regulator**<br>For 16 amp dual-output charging systems (with no charge indicator light), 8-20 HP engines<br>Fits 303700 series engines | |
| **33-249** | Grasshopper 185530<br>Kubota 15531-64601 | **Voltage Regulator**<br>For equipment with permanent magnet alternators with a “no charge” indicator<br>Fits Grasshopper models 1822D, 718D, 721D, & 721G | |
| **33-253** | John Deere M802471 | **Voltage Regulator**<br>Fits compact utility tractor models 650 & 750 | |
| **33-248** | John Deere AM101406 | **Voltage Regulator**<br>Fits lawn tractor models 330, 332, & 322, skid-steer loader models 375 & 3375 | |

E

| OREGON | Replaces | Description | Product Code |
|---|---|---|---|

## Voltage Regulators

| | | | |
|---|---|---|---|
| **33-246** | John Deere AM126304<br>John Deere M70121<br>John Deere M97348 | **Voltage Regulator**<br>For Gator utility vehicles with 15 or 20 amp charging systems<br>Fits lawn & garden tractor models 108, 111, 111H, 112L, 130, 160, 165, 170, 175, 180, 185, 240, 245, 260, 265, 285, 320, 325, 345, 355D, 415, 425, 455, F510, F525, F735, GT242, GT262, GT275, GX345, GX355, LX172, LX176, LX277, LX279, X475, X478, X485, X495, X575, X585, X595, X700, X720, X728, & X729, ATM models 600, 622, & 626, diesel golf equipment model 2243, material transporter models 600, 622, & 626, skid-steer loader models 375 & 3375, Greens mowers models 2500 & 2500A–E | 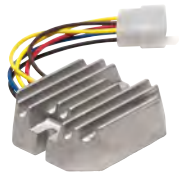 |
| **33-407** | Kawasaki 21066-2056<br>John Deere M70121 | **Voltage Regulator**<br>Fits Kawasaki models FB460, FC400, FC420, & FC540, 13, 15, & 17 amp charging system on engines to 18 HP, John Deere models 1300, 160, 165, 170, 172, 175, 176, 180, 185, 186, 240, 242, 245, & others with 15 amp charging systems | |
| **33-419** | Kohler 12-403-01 | **Voltage Regulator**<br>Fits CV11, CV12.5, CV13, CV14, CV15, & CV18 model engines<br>For commerical walk-behind mowers with Kohler engine, electric clutch, rope starter, and no battery | |
| **33-400** | Kohler 41-403-06<br>Kohler 237335<br>John Deere AM37200 | **Voltage Regulator**<br>For 8 thru 24 HP engines with 15 amp alternator<br>Fits Kohler engine model K181, K241, K301, K321, K482, K532, & K582 “L” pattern with two top terminals and one bottom | |
| **33-401** | Kohler 25-755-03 | **Voltage Regulator**<br>Fits models M8 thru M20, MV16 thru MV20, CH5, CH6, CH11 thru CH15, & CV11 thru CV15<br>For 8 thru 24 HP engines, 15 amp alternator in-line terminals, 3 in a row | |
| **33-411** | Onan 191-1748<br>Onan 191-2106<br>Onan 191-2277 | **Voltage Regulator**<br>For 16-20 HP Onan engines<br>Fits John Deere models 318-420 with Onan engines | |

E

OREGON Replaces Description Product Code

## Electric PTO Clutches — Warner to Oregon® Cross Reference

| WARNER | OREGON |
|---|---|
| 5215-112 | 33-263 |
| 5215-129 | 33-125-1 |
| 5215-130 | 33-126-1 |
| 5215-134 | 33-122-1 |
| 5215-14 | 33-114 |
| 5215-142 | 33-139 |
| 5215-18 | 33-183 |
| 5215-34 | 33-264 |
| 5215-35 | 33-265 |
| 5215-43 | 33-266 |
| 5215-44 | 33-267 |
| 5215-51 | 33-110 |
| 5215-53 | 33-116 |
| 5215-59 | 33-128-1 |

| WARNER | OREGON |
|---|---|
| 5215-62 | 33-113 |
| 5215-69 | 33-185 |
| 5215-88 | 33-118-1 |
| 5217-2 | 33-111 |
| 5217-32 | 33-133 |
| 5217-35 | 33-112 |
| 5217-35 | 33-268 |
| 5217-36 | 33-269 |
| 5217-43 | 33-133 |
| 5217-46 | 33-111 |
| 5217-9 | 33-112 |
| 5218-10 | 33-119-1 |
| 5218-110 | 33-188 |
| 5218-14 | 33-184 |

| WARNER | OREGON |
|---|---|
| 5218-201 | 33-137 |
| 5218-202 | 33-157 |
| 5218-205 | 33-153 |
| 5218-210 | 33-156 |
| 5218-211 | 33-154 |
| 5218-213 | 33-136 |
| 5218-215 | 33-137 |
| 5218-219 | 33-188 |
| 5218-222 | 33-155 |
| 5218-223 | 33-119-1 |
| 5218-245 | 33-276 |
| 5218-257 | 33-121 |
| 5218-26 | 33-121 |
| 5218-27 | 33-117 |

| WARNER | OREGON |
|---|---|
| 5218-271 | 33-277 |
| 5218-29 | 33-124 |
| 5218-293 | 33-135 |
| 5218-31 | 33-138 |
| 5218-33 | 33-189 |
| 5218-44 | 33-137 |
| 5218-5 | 33-115 |
| 5218-58 | 33-121 |
| 5218-65 | 33-136 |
| 5218-76 | 33-135 |
| 5218-80 | 33-137 |
| 5219-1 | 33-270 |
| 5219-115 | 33-271 |
| 5219-116 | 33-272 |

| WARNER | OREGON |
|---|---|
| 5219-14 | 33-132 |
| 5219-19 | 33-190 |
| 5219-25 | 33-104 |
| 5219-32 | 33-273 |
| 5219-4 | 33-274 |
| 5219-45 | 33-130 |
| 5219-51 | 33-134 |
| 5219-64 | 33-134 |
| 5219-79 | 33-134 |
| 5219-88 | 33-275 |
| 5219-99 | 33-255 |

## Parts for Electric PTO Clutches

**33-159** Warner I-5218-251-008

**Pigtail — Electrical Connector Assembly**
For most Warner clutches
(no diode)

**33-261** John Deere AM36066
Warner 5208-451-033

**Field Coil Assembly**

## Electric PTO Clutches

**33-130** Ariens 00191700
Gravely 00191700
Warner 5219-45

**Electric PTO Clutch**
Made by an OEM supplier
ID: 1"
Pulley: 6"
For 5/8" belt

**33-117** Ariens 00554300
Ariens 00574100
Case C375569
Grasshopper 388762
Grasshopper 604180
Woods 70903
Woods 73113
Warner 5218-27

**Electric PTO Clutch**
Made by an OEM supplier
ID: 1"
Double pulley: 4-7/8"
For 1/2" belt

**33-118-1** Ariens 03450500
Dixie Chopper 50300
Snapper 7-9197
Snapper 7-9446
Toro 116277
Warner 5215-88

**Electric PTO Clutch**
Made by an OEM supplier
ID: 1"
Pulley: 5-1/4"
For 5/8" belt

Clutches are engineered for specific applications. Using a clutch not listed for an application may result in premature failure and not be covered under warranty.

E

# Electrical Parts

| OREGON | Replaces | Description | Product Code | |
|---|---|---|---|---|

## Electric PTO Clutches

| | | | |
|---|---|---|---|
| **33-119-1** | Ariens 09225400<br>Gravely E-6247<br>Country Clipper E-6247<br>Dixon 61516<br>Toro 94-6136<br>Warner 5218-10<br>Warner 5218-223 | **Electric PTO Clutch**<br>Made by an OEM supplier<br>ID: 1-1/8"<br>Pulley: 5-1/4"<br>For 5/8" belt | |
| **33-120** | Ariens 09232700<br>Gravely 09232700<br>Great Dane GDA10122<br>Wood Mizer P604<br>Warner 5218-31 | **Electric PTO Clutch**<br>Made by an OEM supplier<br>ID: 1-1/8"<br>Pulley: 6"<br>For 5/8" Belt<br>Replaced by Oregon® 33-138 | |
| **33-121** | Ariens 00574200<br>Ariens 09407700<br>Grasshopper 388767<br>Grasshopper 606242<br>Snapper 3-5520<br>Snapper 5-8925<br>Woods 73558<br>Warner 5218-26 | **Electric PTO Clutch**<br>Made by an OEM supplier<br>Shaft ID: 1-1/8"<br>Double pulley: 4-7/8"<br>For 1/2" belt<br><br>Warner 5218-58<br>Warner 5218-257 | |
| **33-122-1** | AYP 174367<br>Warner 5215-134 | **Electric PTO Clutch**<br>Made by an OEM supplier<br>ID: 1"<br>Pulley: 6"<br>For 5/8" belt | |
| **33-114** | AYP 109550X<br>Bobcat 188018<br>Exmark 543259<br>Ferris 1521083<br>Husqvarna 917063<br>Snapper 1-7063<br>Warner 5215-14 | **Electric PTO Clutch**<br>Made by an OEM supplier<br>ID: 1"<br>Pulley: 6"<br>For 5/8" belt | |
| **33-110** | AYP 142600<br>AYP 137140<br>AYP 108218X<br>Warner 5215-51 | **Electric PTO Clutch**<br>Made by an OEM supplier<br>Keyed hub ID: 1"<br>Pulley diameter: 5.304"<br>For 5/8" belt | |
| **33-112** | AYP 160889<br>Ariens 03643100<br>Troy Built 1772388<br>Husqvarna 532160899<br>John Deere AM119683<br>Snapper 5-3740<br>Woods 03643100<br>Warner 5217-9 | **Electric PTO Clutch**<br>Made by an OEM supplier<br>ID: 1"<br>Pulley diameter: 5.375"<br>For 5/8" belt | |

Clutches are engineered for specific applications. Using a clutch not listed for an application may result in premature failure and not be covered under warranty.

## Electric PTO Clutches

| OREGON | Replaces | Description | Product Code | |
|---|---|---|---|---|
| **33-111** | AYP 145028<br>Ariens 36018<br>Simplicity 1708536<br>Warner 5217-2<br>Warner 5217-46 | **Electric PTO clutch**<br>Made by an OEM supplier<br>ID: 1"<br>Pulley diameter: 5.375"<br>For 5/8" belt | | |
| **33-132** | Bunton/Bobcat 2722016<br>Warner 5219-14 | **Electric PTO Clutch**<br>Made by an OEM supplier<br>ID: 1-1/8"<br>Pulley: 6"<br>For 5/8" belt | | |
| **33-183** | Bobcat 1226167<br>Bobcat 1226028<br>Warner 5215-18 | **Electric PTO Clutch**<br>Made by an OEM supplier<br>ID: 1"<br>Pulley: 6"<br>For 5/8" belt | | |
| **33-116** | Cub Cadet 138412<br>Murray 326108<br>Warner 5215-53 | **Electric PTO Clutch**<br>Made by an OEM supplier<br>ID: 1"<br>Pulley: 5-1/4"<br>For 5/8" belt | | |
| **33-104** | Cub Cadet 917-17774B<br>Warner 5219-25 | **Electric PTO Clutch**<br>Made by an OEM supplier<br>ID: 1"<br>Pulley: 5-5/16"<br>For 5/8" belt | | |
| **33-110** | Cub Cadet 917-1434<br>Cub Cadet 917-0949<br>Cub Cadet 717-1434<br>Cub Cadet 717-0949<br>MTD 917-1434<br>MTD 917-0949<br>MTD 717-1434<br>MTD 717-0949<br>Warner 5215-51 | **Electric PTO Clutch**<br>Made by an OEM supplier<br>ID keyed hub: 1"<br>Pulley diameter: 5.304"<br>For 5/8" belt | | |
| **33-112** | Cub Cadet 917-1459<br>Cub Cadet 717-1459<br>MTD 917-1459<br>MTD 917-1459<br>Warner 5217-9<br>Warner 5217-35 | **Electric PTO Clutch**<br>Made by an OEM supplier<br>ID: 1"<br>Pulley diameter: 5.375"<br>For 5/8" belt | | |

E

# Electrical Parts

| OREGON | Replaces | Description | Product Code | |
|---|---|---|---|---|

## Electric PTO Clutches

| | | | |
|---|---|---|---|
| **33-124** | Cub Cadet 717-3446<br>Cub Cadet 917-3446<br>Warner 5218-29 | **Electric PTO Clutch**<br>Made by an OEM supplier<br>ID: 1"<br>Pulley: 6"<br>For 5/8" belt | |
| **33-125-1** | Cub Cadet 917-1708<br>Cub Cadet 717-1708<br>MTD 717-1708<br>MTD 917-1708<br>Warner 5215-129 | **Electric PTO Clutch**<br>Made by an OEM supplier<br>ID: 1"<br>Pulley: 5-1/4"<br>For 5/8" belt | |
| **33-126-1** | Cub Cadet 917-1709<br>Cub Cadet 717-1709<br>MTD 717-1709<br>MTD 917-1709<br>Warner 5215-130 | **Electric PTO Clutch**<br>Made by an OEM supplier<br>ID: 1"<br>Pulley: 5-1/4"<br>For 5/8" belt | |
| **33-139** | Cub Cadet 917-04080<br>Cub Cadet 717-04080<br>MTD 717-04080<br>MTD 917-04080<br>Warner 5215-142 | **Electric PTO Clutch**<br>Made by an OEM supplier<br>ID: 1"<br>Pulley: 6"<br>For 5/8" belt | |
| **33-133** | Cub Cadet 717-04163<br>Warner 5217-32<br>Warner 5217-43 | **Electric PTO Clutch**<br>Made by an OEM supplier<br>ID: 1"<br>Pulley: 6"<br>For 5/8" belt | |
| **33-134** | Cub Cadet 717-04174<br>Cub Cadet 917-04174A<br>Cub Cadet 917-04174<br>Cub Cadet 717-04174A<br>MTD 917-04174A<br>MTD 917-04174<br>MTD 717-04174A<br>MTD 717-04174<br>Warner 5219-51<br>Warner 5219-64<br>Warner 5219-79 | **Electric PTO Clutch**<br>Made by an OEM supplier<br>ID: 1"<br>Pulley: 6"<br>For 5/8" belt | |
| **33-255** | Cub Cadet 917-04622<br>Cub Cadet 717-04183<br>MTD 917-04622<br>MTD 717-04183<br>Warner 5219-99 | **Electric PTO Clutch**<br>Made by an OEM supplier<br>ID: 1"<br>Pulley: 5-5/8"<br>For 5/8" belt | |

Clutches are engineered for specific applications. Using a clutch not listed for an application may result in premature failure and not be covered under warranty.

E

## Electric PTO Clutches

| OREGON | Replaces | Description | Product Code |
|---|---|---|---|
| **33-184** | Cub Cadet 01002108P<br>Warner 5218-14 | **Electric PTO Clutch**<br>Made by an OEM supplier<br>ID: 1"<br>Pulley: 6"<br>For 5/8" belt | |
| **33-185** | Cub Cadet 917-3390<br>Encore 523025<br>Warner 5215-69 | **Electric PTO Clutch**<br>Made by an OEM supplier<br>ID: 1-1/8"<br>Pulley: 6"<br>For 5/8" belt | |
| **33-127** | Encore 523370<br>Warner 5218-17 | **Electric PTO Clutch**<br>Made by an OEM supplier<br>ID: 1-1/8"<br>Pulley: 6"<br>For 5/8" belt | |
| **33-135** | Exmark 103-0662<br>Warner 5218-76<br>Warner 5218-293 | **Electric PTO Clutch**<br>Made by an OEM supplier<br>ID: 1"<br>Pulley: 6-3/8"<br>For 5/8" belt | |
| **33-136** | Exmark 103-0665<br>Exmark 164-1300<br>Warner 5218-65<br>Warner 5281-213 | **Electric PTO Clutch**<br>Made by an OEM supplier<br>ID: 1-1/8" | |
| **33-137** | Exmark 103-0690<br>Exmark 103-960<br>Exmark 109-2916<br>Exmark 109-9276<br>Exmark 1-653048<br>Warner 5218-44<br>Warner 5218-80<br>Warner 5218-215<br>Warner 5218-201 | **Electric PTO Clutch**<br>Made by an OEM supplier<br>ID: 1"<br>Pulley: 7-3/8"<br>For 5/8" belt | |
| **33-153** | Exmark 109-9276<br>Warner 5218-205 | **Electric PTO Clutch**<br>Fits Lazer Z HP s/n 720,000 and up (except 27 HP)<br>ID: 1"<br>Pulley diameter: 7-1/8"<br>For 5/8" belt | |

E

# Electrical Parts

| OREGON | Replaces | Description | Product Code | |
|---|---|---|---|---|
| **Electric PTO Clutches** | | | | |
| **33-156** | Exmark 109-9275<br>Warner 5218-210 | **Electric PTO Clutch**<br>Fits Lazer Z HP 27 HP serial numbers 720,000 and up<br>ID: 1-1/8"<br>Pulley diameter: 7-1/4"<br>For 5/8" belt | | |
| **33-157** | Exmark 103-6579<br>Warner 5218-202 | **Electric PTO Clutch**<br>Fits Lazer Z air cooled serial 720,000 and up,<br>Lazer Z AS serial 720,000-789, & 999<br>ID: 1-1/8"<br>Pulley diameter: 7-3/8"<br>For 5/8" belt | | |
| **33-187** | Exmark 1653048<br>Exmark 103-0960<br>Warner 5218-44<br>Warner 5218-201 | **Electric PTO Clutch**<br>Made by an OEM supplier<br>ID: 1"<br>Pulley: 7-3/8"<br>For 5/8" belt | | |
| **33-115** | Exmark 633099<br>Bobcat 2188151<br>Ferris 1522040<br>Husqvarna 102603<br>Kees 102603<br>Warner 5218-5 | **Electric PTO Clutch**<br>Made by an OEM supplier<br>ID: 1-1/8"<br>Pulley: 6"<br>For 5/8" belt | | |
| **33-138** | Gravely 9266700<br>Gravely 09232700<br>Great Dane GDA10122<br>Wood Mizer P604<br>Woods 73559<br>Warner 5218-94<br>Warner 5218-31 | **Electric PTO Clutch**<br>Made by an OEM supplier<br>ID: 1-1/8"<br>Pulley: 6"<br>For 5/8" belt<br>Heavy-duty version of Oregon® 33-120 | | |
| **33-155** | Hustler 601311<br>Warner 5218-222 | **Electric PTO Clutch**<br>Component of kit 787366<br>Fits Hustler Z, Hustler Z XR7, Hustler Mini Z, Hustler ATZ, Hustler Super Z, Hustler Super Z XR7, Hustler Mini Z, & Hustler Super Mini Z<br>ID: 1-1/8"<br>Pulley diameter: 6-5/16"<br>For 5/8" belt | | |
| **33-188** | Hustler 781039<br>Warner 5218-110<br>Warner 5218-219 | **Electric PTO Clutch**<br>Made by an OEM supplier<br>ID: 1-1/8"<br>Pulley: 6-1/4"<br>For 5/8" belt | | |

Clutches are engineered for specific applications. Using a clutch not listed for an application may result in premature failure and not be covered under warranty.

E

## Electric PTO Clutches

| OREGON | Replaces | Description | Product Code |
|---|---|---|---|

**33-263**
John Deere AM123038
Warner 5215-112

**Electric PTO Clutch**
Fits models LX172, LX173, LX176, LX178, LX186, & LX188
ID: 1
Pulley diameter: 5-3/8
For 1/2" belt

**33-264**
John Deere AM123123
Warner 5215-34

**Electric PTO Clutch**
Fits models LX172, LX173, LX176, LX178, LX186, LX188,GS25, GS30, GS45, GS75,HD45, HD75, 180, & 185
ID: 1-1/8
Pulley diameter: 5-3/8
For 1/2" belt



**33-265**
John Deere AM122969
Warner 5215-35

**Electric PTO Clutch**
Fits models 108, 111, 112L, 170, STX30, STX38, LX172, LX173, LX176, LX178, LX186, LX188, G15, GS25, GS30, GS45, GS75, HD45, & HD75
ID: 1
Pulley diameter: 5-3/8
For 1/2" belt

**33-266**
John Deere AM105302
Warner 5215-43

**Electric PTO Clutch**
Fits models F710 & F725
ID: 1-1/8
Pulley diameter: 4-5/16 (double)
For 1/2" belt

**33-267**
John Deere AM119536
Warner 5215-44

**Electric PTO Clutch**
Fits models 240, 245, 260, 265, 285, 320, 325, 335, 345, GT242, GT262, & GT275, SABRE 2554HV & 2254HV, & Scotts S2554
ID: 1-1/8
Pulley diameter: 5-3/8
For 1/2" belt

**33-269**
John Deere AM121972
Warner 5217-36

**Electric PTO Clutch**
Fits models STX38 & STX46
ID: 1
Pulley diameter: 5-1/4
For 1/2" belt

**33-270**
John Deere AM126100
Warner 5219-1

**Electric PTO Clutch**
Fits models GT225, GT235, GT245, GX255, LT190, LX255,LX266,LX277, LX279, LX280, LX288, LX289, SST16, & SST18
ID: 1
Pulley diameter: 5
For 1/2" belt

**33-271**
John Deere AM138234
Warner 5219-115

**Electric PTO Clutch**
Fits models Z225 EZTrak
ID: 1
Pulley diameter: 5-5/8
For 1/2" belt

E

# Electrical Parts

| OREGON | Replaces | Description | Product Code | |
|---|---|---|---|---|

## Electric PTO Clutches

| | | | |
|---|---|---|---|
| **33-272** | John Deere AM138729<br>Warner 5219-116 | **Electric PTO Clutch**<br>Fits models Z245 EZTrak<br>ID: 1<br>Pulley diameter: 6-1/8<br>For 1/2" belt | |
| **33-273** | John Deere TCA14535<br>Warner 5219-32 | **Electric PTO Clutch**<br>Fits models 717 Mini-Frame Ztrak & 727 Mini-Frame ZTrak<br>ID: 1-1/8<br>Pulley diameter: 5-1/4<br>For 5/8" belt | |
| **33-274** | John Deere GDA10017<br>Warner 5219-4 | **Electric PTO Clutch**<br>Fits models 717 Mini-Frame ZTrak, 727 Mini-Frame ZTrak, 647 Quik-Trak, 657 Quik-Trak, & 667 Quik-Trak<br>ID: 1<br>Pulley diameter: 5-3/4<br>For 5/8" belt | |
| **33-275** | John Deere AM136787<br>Warner 5219-88 | **Electric PTO Clutch**<br>Fits models Z225 EZTrak Residential, Z425 EZTrak Residential, Z445 EZTrak Residential, & EZTrak Residential<br>ID: 1<br>Pulley diameter: 5-1/2<br>For 5/8" belt | |
| **33-276** | John Deere TCA19813<br>Warner 5218-245 | **Electric PTO Clutch**<br>Fits models Z720A ZTrak, Z520A Estate ZTrak, Z810A Pro ZTrak, Z820A Pro ZTrak, Z910A Pro ZTrak, & Z920A Pro ZTrak<br>ID: 1-1/8<br>Pulley diameter: 6-5/8<br>For 5/8" belt | |
| **33-277** | John Deere TCA21167<br>Warner 5218-271 | **Electric PTO Clutch**<br>Fits models Z910A ZTrak, Z920A ZTrak, Z910A Pro ZTrak, Z920A Pro ZTrak, & Z925A Pro ZTrak<br>ID: 1-1/8<br>Pulley diameter: 6-5/8<br>For 5/8" belt | |
| **33-113** | Toro 93-3160<br>Ariens 30908<br>Cub Cadet WD-C38410<br>Warner 5215-62 | **Electric PTO Clutch**<br>Made by an OEM supplier<br>ID: 1-1/8"<br>Double pulley: 5"<br>For 1/2" belt | |
| **33-189** | Toro 94-4632<br>Toro 105-1671<br>Warner 5218-33 | **Electric PTO Clutch**<br>Made by an OEM supplier<br>ID: 1-1/8"<br>Double pulley: 4-7/8"<br>For 1/2" belts | |

E

| OREGON | Replaces | Description | Product Code | |
|---|---|---|---|---|

## Electric PTO Clutches

| | | | |
|---|---|---|---|
| **33-128-1** | Toro 99-8012<br>Jacobsen 990947<br>Warner 5215-59 | **Electric PTO Clutch**<br>Made by an OEM supplier<br>ID: 1"<br>Pulley: 5-1/4"<br>For 5/8" belt | |
| **33-190** | Wright Stander 71410006<br>Warner 5219-19 | **Electric PTO Clutch**<br>Made by an OEM supplier<br>ID: 1"<br>Pulley: 6"<br>For 5/8" belt | |
| **33-154** | Wright 71410001<br>Warner 5218-211 | **Electric PTO Clutch**<br>Fits large frame Standers up to serial number 49704<br>ID: 1"<br>Pulley diameter: 6-5/16"<br>For 5/8" belt | |

## Diodes

| | | | |
|---|---|---|---|
| **33-414** | Briggs & Stratton<br>393456 | **Diode & Pigtail**<br>For 2-4 amp dual circuit alternators<br>Fits models 197400 & 280700 series | |
| **33-415** | Briggs & Stratton<br>393814 | **Diode Assembly**<br>For 2-4 amp charging systems<br>Fits 176450, 176432, & 280700 series | |
| **33-420** | Tecumseh 611161 | **Diode**<br>For charging system | |

E

## Can't find what you're looking for?

Try us online to search the latest products available.

OregonProducts.com

# Electrical Parts

## Primary Wire

| OREGON | Length | Color | Product Code |
|---|---|---|---|
| 42-080 | 100' | Red | |
| 42-081 | 100' | Black | |

16 gauge wire

42-080

42-081

## Cable Ties

**02-017**

**Cable Ties**
50-pack of Oregon® 02-000 nylon tie
Cable tie length: 8"

## Fuses

| OREGON | Type | Size | Product Code |
|---|---|---|---|
| 33-031 | ATO | 10 amp | |
| 33-032 | ATO | 15 amp | |
| 33-033 | ATO | 20 amp | |
| 33-034 | ATO | 25 amp | |
| 33-035 | ATO | 30 amp | |

• 16 gauge wire

## Fuse Holders - Heavy-Duty

| OREGON | Description | Product Code |
|---|---|---|

**33-038**

**Fuse Holder**
For ATO style fuses up to 30 amp, 12 AWG wire
Fits Oregon 33-030 thru 33-035
Complete with 20 amp fuse

**33-070**

**Fuse Holder**
For glass fuses up to 20 amp, twist and lock style holder
Fits Oregon 33-064
Complete with 20 amp fuse

E

## Electrical Terminal & Connector Assortment

| OREGON | Qty. | Description | Product Code |
|---|---|---|---|
| 08-152 | 170 | Electrical Terminals & Connectors<br>Standard refill qty. 10 | |
| **Components** | | | |
| | 10 | Scotch Tab Connector - Blue | |
| | 10 | Eye Terminal #6 Screw - Blue | |
| | 10 | Eye Terminal #10 Screw - Blue | |
| 33-307 | 10 | Eye Terminal 1/4" Screw - Blue | |
| | 20 | Spade Terminal #10 Screw - Blue | |
| | 10 | Electrical Terminal - Hook Style | |
| 33-312 | 20 | 2-Wire Butt Connector - Red | |
| 33-313 | 20 | 2-Wire Butt Connector - Blue | |
| 33-301 | 10 | Slide Connector - Female - Blue | |
| 33-302 | 10 | Slide Connector - Male - Blue | |
| | 20 | 2 Wire Butt Connector - Yellow | |
| | 10 | Spade Terminal #6 Screw - Red | |
| | 10 | Hook Terminal #6 Screw - Blue | |

## Lead Battery Terminal

| OREGON | Description | Product Code |
|---|---|---|
| **47-689** | **Two Screw Emergency Terminal**<br>Heavy lead, fits all battery cables<br>For 6 thru 2 gauge cable | |

## Terminal Insulators

**47-020** **Terminal Insulator**
Medium

## Battery Cable Lugs

**47-014** **Battery Cable Lug – 1/4"**

**47-038** **Battery Cable Lug – 3/8"**
Open conductive lugs
For 6 to 2 gauge cable
Use with Oregon® 47-050 & 47-051

## Battery Tender Charger

**33-502** **Battery Charger**
Battery Tender Junior
Charges all 12-volt batteries, safely charges sealed batteries in walk-behind mowers as well as wet 12-volt batteries 12V at 750mA, 2-step charging, fully automatic switching from charge to float, 5-year warranty
Can be used to charge Oregon 33-500-0

E

# Electrical Parts

| OREGON | Replaces | Description | Product Code |
|---|---|---|---|

## Battery Cables

| OREGON | Length | Color | Lug Hole Dia/ | Product Code |
|---|---|---|---|---|
| 47-080 | 8" | Black | 3/8" x 3/8" | |
| 47-120 | 12" | Black | 3/8" x 3/8" | |
| 47-160 | 16" | Black | 3/8" x 3/8 | |
| 47-200 | 20" | Black | 3/8" x 3/8" | |
| 47-081 | 8" | Red | 3/8" x 3/8" | |
| 47-121 | 12" | Red | 1/4" x 3/8" | |
| 47-161 | 16" | Red | 1/4" x 3/8" | |
| 47-201 | 20" | Red | 1/4" x 3/8" | |

- Poly-vinyl insulation
- 6-gauge cable

| | | |
|---|---|---|
| 47-050 | 50' | Black |
| 47-051 | 50' | Red |

6-gauge battery cable with poly-vinyl insulation

## Batteries & Accessories

**33-500-0** Toro 55-7520, Lawn Boy 684708, Lawn Boy 683637

**Battery**
For all Toro walk-behind mowers with electric start & newer style "S" series Lawn Boy mowers

**42-005**

**Battery Terminal Protector Spray**
10 oz. spray can
Fights battery corrosion
Prolongs battery life

**42-007**

**Battery Cleaner Spray**
16 oz. spray can
Penetrates, loosens and neutralizes all acid corrosion deposits
Assures maximum current flow

**42-001**

**Battery Hydrometer**
Heavy-duty shop version
Measures cell specific gravity

E

| OREGON | Replaces | Description | Product Code | |
|---|---|---|---|---|

## Briggs & Stratton Gasket Sets

| | | | |
|---|---|---|---|
| **49-412** | 393411 | **Complete Gasket Set with Seals**<br>Fits 220700, 252700, 253700, 254700, 255700, 256700, 257700, 258700, & 259700 series engines<br>For 11 and 12 HP vertical engines | 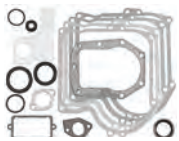 |
| **50-408** | 699933<br>298989 | **Complete Gasket Set with Seals**<br>Fits 92500 & 92900 engines<br>For 3 and 3.5 HP vertical engines | 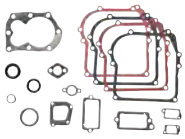 |
| **50-409** | 299577 | **Complete Gasket Set with Seals**<br>Fits 170400, 170700, 190400, 195400, 190700, 191700, 192700, & 193700 series<br>For 7 & 8 HP engines | 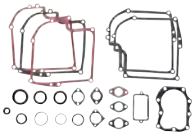 |
| **50-410** | 495603<br>397145 | **Complete Gasket Set with Seals**<br>Fits 297615 130202, 130400, 131400, 132400 (1994 & older), 100200, 130200, 131200, & 132200 series<br>For 5 HP horizontal engines | 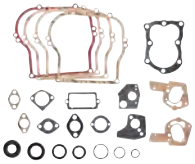 |
| **50-411** | 496659<br>297616 | **Complete Gasket Set with Seals**<br>Fits 100900, 130900, & 132900 series<br>For 4 & 5 HP vertical engines | |
| **50-412** | 494241<br>490525 | **Complete Gasket Set with Seals**<br>Fits models 280700, 281700, 282700, 283700, & 286700<br>For 12 & 12.5 HP engines | 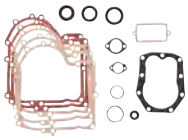 |
| **50-437** | 690192<br>494385 | **Gasket Set**<br>Fits Walbro carburetors on 21, 28, & 31 CID single cylinder OHV engines | |

## Briggs & Stratton Gaskets

| | | | |
|---|---|---|---|
| **49-129** | 272296<br>271840 | **Air Cleaner Gasket** | |
| **49-131** | 271139<br>271139S | **Air Cleaner Gasket**<br>For 3–5 HP engines<br>GS030-104 | |

E

# Engine Parts

## Briggs & Stratton Gaskets

| OREGON | Replaces | Description | Product Code |
|---|---|---|---|
| **49-069** | 272653<br>272653S<br>795629 | **Air Cleaner Gasket**<br>Fits 133700-133799, 135700-135799, 127700-127799, 127800-127899, & 129800-129899 series | |
| **50-101** | 692218<br>270833 | **Base Gasket**<br>Fits 92500, 92900, 110900t, 60000, & 80000 series<br>For 3, 3-1/2, & 4 HP vertical & 2, 3, & 4 HP horizontal engines<br>Thickness: .015" | |
| **49-110** | 692405<br>271996 | **Base Gasket**<br>For 12 and 12-1/2 HP engines<br>Thickness: .009" | 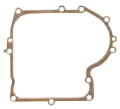 |
| **49-114** | 692232<br>272198 | **Base Gasket** | |
| **49-115** | 692226<br>271916 | **Base Gasket**<br>For 12 and 12-1/2 HP engines<br>Thickness: .015" | 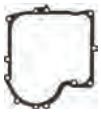 |
| **49-123** | 27918<br>394209 | **Carburetor Body Gasket**<br>Fits models 142700, 147000, 170000, 190000, 191000, & 200000 | |
| **49-355** | 27355<br>27355S | **Carburetor Mounting Gasket**<br>Fits 80000, 100200, 130200, 131200, & 132200 series<br>For 3, 4, & 5 HP horizontal engines | |
| **49-095** | 490522<br>273113S<br>273113<br>271936 | **Carburetor Mounting Gasket**<br>Fits 80200, 91200, 112200, 133200, & 135200 series | |
| **49-119** | 272554<br>272554S<br>270824 | **Carburetor Mounting Gasket**<br>For 10 & 12.5 HP engines | |
| **49-031** | 692236<br>272293<br>270917 | **Exhaust Gasket**<br>For 16 & 18 HP twins | |
| **49-127** | 270511 | **Float Bowl Gasket**<br>For 7 & 12 HP vertical engines | |

E

## Briggs & Stratton Gaskets

| OREGON | Replaces | Description | Product Code |
|---|---|---|---|
| **49-128** | 692190<br>68477 | **Fuel Bowl Gasket**<br>Use with Oregon® 07-001 | |
| **49-161** | 272475S<br>272475 | **Rocker Arm Cover Gasket**<br>For 21 CID OHV engines | |
| **50-435** | 273280S<br>273280<br>272614 | **Head Gasket**<br>Fits 21DM & 28 CID OHV vertical shaft engines | |
| **50-438** | 691894<br>273364 | **Air Cleaner Gasket**<br>Fits 12 CID single cylinder OHV vertical engines | |
| **49-160** | 27034 | **Carburetor Bowl Gasket**<br>Fits models 142000–147000, 252000, 301000, & 325000 | |
| **50-027** | 698717<br>692288<br>395007<br>272536S<br>272536<br>272170<br>270341 | **Head Gasket**<br>Fits 92500 & 92900 series<br>For 3 & 3-1/2 HP engines | |
| **50-541** | 272163<br>272163S<br>270430 | **Head Gasket**<br>Metal clad<br>For 7 & 8 HP horizontal and vertical engines | 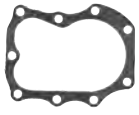 |
| **50-542** | 272157S<br>272157<br>270383 | **Head Gasket**<br>Metal clad<br>For 5 HP horizontal and vertical engines | |
| **50-544** | 272167<br>27670 | **Head Gasket**<br>Metal clad<br>For 2 & 3 HP horizontal engines | |
| **50-025-0** | 271866<br>271866S<br>271075 | **Head Gasket**<br>For 11 HP engines<br>Grafoil | |

E

# Engine Parts

| OREGON | Replaces | Description | Product Code | |
|---|---|---|---|---|

## Briggs & Stratton Gaskets

| | | | | |
|---|---|---|---|---|
| **50-545** | 271867<br>271867S<br>270984 | **Head Gasket**<br>For 16 & 18 HP twin cylinder grafoil | | 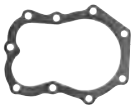 |
| **50-546** | 271868<br>271868S<br>270983 | **Head Gasket**<br>For 16 & 18 HP twin cylinder grafoil | | |
| **50-543** | 272200<br>272200S | **Head Gasket**<br>Fits models 12A800, 121700, 121800, 122700, 123700, 123800, 124700, 124800, & 127500. Grafoil<br>For Quantum 12 CID engines | | |
| **50-441** | 692249<br>272916 | **Cylinder Head Gasket**<br>For 12 CID L-head vertical shaft engines | | |
| **50-445** | 272694 | **Head Gasket**<br>For 9 and 10 CID L-head vertical engines<br>before code 0411900 | | |
| **50-448** | 698717<br>692288<br>272694 | **Head Gasket**<br>For 9 and 10 CID L-head vertical engines<br>after code 0411800 | | |
| **49-111** | 270345<br>270345S | **Intake Tube Gasket**<br>3 & 3-1/2 HP vertical engines | | |
| **02-644-0** | 270344<br>270344S | **O-Ring**<br>For intake tube on 3 & 4 HP engines | | |
| **49-099** | 272409S<br>272409<br>271592<br>27911 | **Tank Mounting Gasket**<br>Fits 60000, 80000, 100200, & 130200 series | | |
| **49-067** | 272996<br>272410<br>271928 | **Tank Mounting Gasket**<br>Fits 132200 series – three-hole gasket | | |
| **49-109** | 692241<br>272489 | **Tank Mounting Gasket**<br>For 2–5 HP horizontal engines – four-hole gasket | | |
| **49-246** | 281165S | **Carburetor Bowl Gasket**<br>Fits LMT Walbro carburetors used on 192400 model series engines | | |

E

| OREGON | Replaces | Description | Product Code |
|---|---|---|---|

## Briggs & Stratton Gaskets

| | | | |
|---|---|---|---|
| **49-107** | 27549<br>27549S | **Valve Cover Gasket**<br>For 2–5 HP horizontal engines | |
| **49-100** | 695890<br>272602S<br>272602<br>270239 | **Valve Cover Gasket**<br>Fits 92900, 110000, & 111000 series | |
| **49-112** | 27803<br>27803S | **Valve Cover Gasket**<br>For 7–18 HP engines | |
| **49-132** | 699833<br>272481S<br>272481<br>271904 | **Valve Cover Gasket**<br>For Quantum and Europa engines | 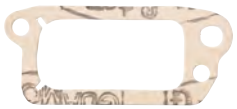 |

## Briggs & Stratton Oil Seals

| | | | |
|---|---|---|---|
| **49-204** | 399781<br>399781S | **Oil Seal**<br>Fits PTO side on models 97700, 99700, 12A800, 12D800, 121700 thru 129800, & 104700 series engines<br>ID: 1-1/16", OD: 1-11/16" | |
| **49-040-0** | 299819<br>299819S<br>89660<br>393862 | **Oil Seal**<br>For 3, 3-1/2, 4, & 5 HP engines, flywheel side<br>ID: 7/8", OD: 1-1/4", thickness: 3/16" | |
| **49-041-0** | 391483<br>391483S | **Oil Seal**<br>For 3–4 HP vertical engines (PTO side)<br>ID: 7/8", OD: 1-3/8", thickness: 5/16" | |
| **49-045** | 391086<br>391086S | **Oil Seal**<br>For mag side 10–12.5, 14, 16, & 18 HP engines, 8 HP engines, & PTO side 7–8 HP engines<br>ID: 1-3/16", OD: 1-11/16", thickness: 1/4" | |
| **49-047** | 291675<br>291675S | **Oil Seal**<br>For PTO side on 11 HP engines<br>ID: 1-3/8", OD: 1-7/8", thickness: 1/4" | |
| **49-413** | 281370<br>281370S<br>68838<br>805259 | **Oil Grommet**<br>For oil dip stick tube | |

E

# Engine Parts

| OREGON | Replaces | Description | Product Code |
|---|---|---|---|

## Briggs & Stratton Connecting Rods

| | | | |
|---|---|---|---|
| **36-100** | 299429<br>299430 | **Connecting Rod**<br>Fits model series 130200-132900<br>For 5 HP engines | |
| **36-101** | 294367<br>294201 | **Connecting Rod**<br>Fits model series 80000, 90000–96900 (except two-cycle)<br>For 3, 3.5, & 3.75 HP engines | |
| **36-102** | 392939<br>490566 | **Connecting Rod**<br>Fits model 100700–126800 3.5–4 HP max series &<br>3.5–6 HP (12 CID) Quantum prior to 97011300 date code<br>For 4 HP engines | |
| **36-103** | 390401<br>390402 | **Connecting Rod**<br>Fits model series 190400–196700<br>For 8 HP engines | |
| **36-104** | 391775<br>490348 | **Connecting Rod**<br>Fits 280700–286700, 288700, 289700, 28A700, & 28M700<br>For 10–15 HP horizontal & vertical engines<br>Not for OHV models | |

## Briggs & Stratton Ring Sets

| OREGON | OEM No | Size | Description | Product Code |
|---|---|---|---|---|
| 36-028 | 498680 | Std. | For 3.5 HP, thin ring | |
| 36-027 | 499425 | Std. | For 5 HP Quantum<br>(after date code 97011200) | |
| 36-022 | 392331 | Std. | Chrome, for 10 thru 12.5 HP engines<br>model 22, 25, & 28 series | |
| 36-005 | 391780 | Std. | For 10–12.5 HP engines<br>L head cast iron bore | |

## Briggs & Stratton Oil Filler Plug

| | | | |
|---|---|---|---|
| **49-667** | 66768 | **Oil Filler Plug** | |

E

| OREGON | Replaces | Description | Product Code | |
|---|---|---|---|---|
| **Honda Gasket Sets** | | | | |
| **50-414** | 06111-ZH7-405 | **Gasket Set**<br>Fits GX120 series engines | | 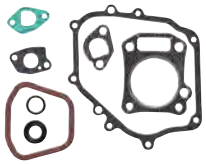 |
| **50-416** | 06111-ZH8-405 | **Gasket Set**<br>Fits GX160 series engines | | 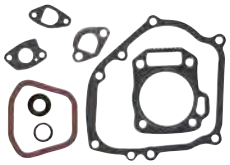 |
| **50-415** | 061A1-ZE1-010 | **Gasket Set**<br>Fits GX140 series engines | | 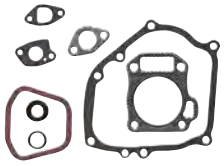 |
| **50-417** | 061A1-ZE2-U01<br>06111-ZE2-408 | **Gasket Set**<br>Fits GX240 series engines | | 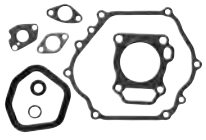 |
| **50-418** | 061A1-ZE3-T01<br>06111-ZE3-405 | **Gasket Set**<br>Fits GX340 series engines | | 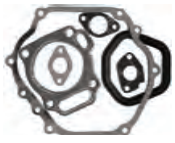 |
| **50-419** | 061A1-ZF6-V00<br>06111-ZF6-407 | **Gasket Set**<br>Fits GX390 series engines | | 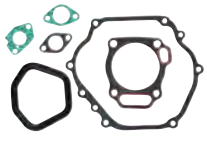 |
| **Honda Gaskets** | | | | |
| **50-420** | 16212-ZL8-000 | **Gasket**<br>Fits GCV 135 & GCV 160 series engines | | |
| **50-421** | 16221-883-800 | **Gasket**<br>Fits GCV135 & GCV160 series engines | | |
| **50-422** | 16228-ZL8-000 | **Gasket**<br>Fits GCV135 & GCV160 series engines | | |
| **49-186** | 16220-ZE6-010 | **Air Cleaner Gasket**<br>Fits GXV120 & GXV160 series engines | | |

E

# Engine Parts

## Honda Gaskets

| OREGON | Replaces | Description | Product Code |
|---|---|---|---|
| **49-185** | 16220-ZE1-020 | **Air Cleaner Gasket**<br>Fits GX160 series engines | |
| **49-184** | 16220-ZAO-702 | **Air Cleaner Gasket**<br>Fits GX240, GX340, & GX390 series engines | |
| **49-182** | 16212-ZG9-J60 | **Carburetor Insulator Gasket**<br>Fits GXV120 series engines | |
| **49-181** | 16212-ZE7-M10 | **Carburetor Insulator Gasket**<br>Fits GXV160 series engines | |
| **49-183** | 16212-ZH8-800 | **Carburetor Insulator Gasket**<br>Fits GX160 series engines | |
| **49-190** | 16221-ZH8-801 | **Carburetor Gasket**<br>Fits GX160 series engines | |
| **49-191** | 16223-ZAO-800 | **Carburetor Insulator Gasket**<br>Fits GXV240 series engines | |
| **49-187** | 16221-ZAO-800 | **Carburetor Gasket**<br>Fits GX240 series engines | |
| **49-192** | 16223-ZE3-W00 | **Carburetor Insulator Gasket**<br>Fits GX340 & GX390 series engines | |
| **49-189** | 16221-ZF6-800 | **Carburetor Gasket**<br>Fits GX340 & GX390 series engines | |
| **49-324** | 16221-Z0H-000 | **Carburetor Gasket**<br>Fits GX25 engines | |
| **49-143** | 18381-ZL8-305 | **Exhaust Gasket**<br>Fits GCV135 & GCV160 series engines | |
| **50-428** | 12251-ZE6-000 | **Head Gasket**<br>Fits GXV120 series engines<br>5 HP | |
| **50-553** | 12251-ZE2-800<br>12251-ZE2-000 | **Head Gasket**<br>Fits GX240 series engines<br>8 HP | |

E

## Honda Gaskets

| OREGON | Replaces | Description | Product Code |
|---|---|---|---|
| **50-555** | 12251-ZF6-W00 | **Head Gasket**<br>Fits GX390 series engines | |
| **50-554** | 12251-ZE3-800<br>12251-ZE3-W00 | **Head Gasket**<br>Fits GX340 series engines<br>10 HP | |
| **50-556** | 12251-ZF1-000<br>12251-ZE1-800 | **Head Gasket**<br>Fits GX160 series engines<br>5.5 HP | |
| **50-450** | 11381-ZH8-801 | **Sump Cover Gasket**<br>Fits GX160 series engines | |
| **50-452** | 11381-ZE2-800 | **Sump Cover Gasket**<br>Fits GX240 series engines | |
| **50-455** | 11381-ZE3-001 | **Sump Cover Gasket**<br>Fits GX340 & GX390 series engines | |
| **50-433** | 12391-ZE7-M10<br>12391-ZE7-T00 | **Valve Cover Gasket**<br>Fits GXV120 & GXV160 series engines | |
| **50-432** | 12391-ZE1-000 | **Valve Cover Gasket**<br>Fits GX160 series engines | |
| **50-431** | 12391-ZE2-020 | **Valve Cover Gasket**<br>Fits GX240, GX340, & GX390 series engines | |
| **50-423** | 18381-ZE2-W10 | **Muffler Gasket**<br>Fits GX240, GX340, & GX390 series engines | |
| **50-425** | 18381-ZH6-800 | **Muffler Gasket**<br>Fits GX160 series engines | |
| **50-426** | 18333-ZK6-Y00 | **Muffler Pipe Gasket**<br>Fits GX240, GX340, & GX390 series engines | |

# Engine Parts

| OREGON | Replaces | Description | Product Code |
|---|---|---|---|

## Honda Carburetor Insulators

| | | | |
|---|---|---|---|
| **49-233** | Honda 16211-ZE1-000 | **Carburetor Insulator**<br>Fits GX140 & GX160 | |
| **49-234** | Honda 16211-ZE2-000 | **Carburetor Insulator**<br>Fits GX240 & GX270 | |
| **49-236** | Honda 16211-ZE2-W00 | **Carburetor Insulator**<br>Fits GX340 & GX390 | |

## Honda Pistons

| | | | |
|---|---|---|---|
| **36-243** | 13101-ZF7-010 | **Piston Standard**<br>Fits GXV160 series engines, 5.5 HP. Use Oregon® 36-043 rings | |
| **36-244** | 13101-ZE2-W00<br>13101-ZE2-010 | **Piston Standard**<br>Fits GX240 series engines, 8 HP. Use Oregon 36-044 rings | |
| **36-245** | 13101-ZE3-W00 | **Piston Standard**<br>Fits GX340 series engines, 10 HP. Use Oregon 36-045 rings | |
| **36-246** | 13101-ZF6-W00 | **Piston Standard**<br>Fits GX390 series engines. Use Oregon 36-046 rings | |

## Honda Ring Sets

| | | | |
|---|---|---|---|
| **36-041** | 13010-ZE6-013 | **Ring Set Standard Bore**<br>Fits GX120 series engines, 4 HP | 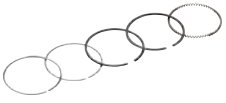 |
| **36-042** | 13010-ZE1-013 | **Ring Set Standard Bore**<br>Fits GX140 series engines, 5 HP | |
| **36-043** | 13010-ZF1-023 | **Ring Set Standard Bore**<br>Fits GX160 series engines, 5.5 HP | |
| **36-044** | 13010-ZE2-013 | **Ring Set Standard Bore**<br>Fits GX240 series engines, 8 HP | |
| **36-045** | 13010-ZE3-003 | **Ring Set Standard Bore**<br>Fits GX340 series engines, 10 HP | |
| **36-046** | 13010-ZF6-003 | **Ring Set Standard Bore**<br>Fits GX390 series engines | |

## Honda Connecting Rods

| OREGON | OEM No | Description | Product Code |
|---|---|---|---|
| 36-140 | 13200-ZE0-000 | Connecting Rod Standard<br>For GX110 & GX120 series engines | |
| 36-141 | 13200-ZE1-010<br>13200-ZE1-000 | Connecting Rod Standard<br>For GX140 & GX160 series engines | |
| 36-142 | 13200-ZE2-010<br>13200-ZE2-000 | Connecting Rod Standard<br>For GX240 & GX270 series engines | |
| 36-143 | 13200-ZE3-020<br>13200-ZE3-010 | Connecting Rod Standard<br>For GX340 & GX390 series engines | |

## Honda Valves

| OREGON | OEM No | Valve Type | Fits Model | Product Code |
|---|---|---|---|---|
| 36-524 | 14711-Z0J-000<br>14711-ZL8-000 | Intake | Fits GCV120 & GCV160 engines | |
| 36-521 | 14711-ZF1-000 | Intake | Fits GX160 engines | |
| 36-522 | 14721-ZF1-000 | Exhaust | Fits GX160 engines | |
| 36-523 | 14711-ZE2-000 | Intake | Fits GX240 & GX270 engines | |
| 36-325 | 14711-ZE3-000 | Intake | Fits GX340 engines | |
| 36-326 | 14721-ZE3-000 | Exhaust | Fits GX340 engines | |

## Honda Long Heads

| OREGON | Description | Product Code |
|---|---|---|
| 36-530 | Long Head for GX160 includes: head, head gasket, valves, valve springs, keepers, rocker arms, rocker arm cover gasket, intake studs, intake gasket, & exhaust gasket | |
| 36-531 | Long Head for GX340/GX390 includes: head, head gasket, valves, valve springs, keepers, rocker arms, rocker arm cover gasket, intake studs, intake gasket, & exhaust gasket | |
| 36-535 | Long Head for GX240/GX270 includes: rocker arms, rocker arm cover gasket, intake studs, & intake gasket | |

## Honda Oil Seals

| OREGON | Replaces | Description | Product Code |
|---|---|---|---|
| **49-194** | 91252-888-003 | **Oil Seal**<br>Fits GXV120 & GXV160 series engines | |
| **49-206** | 91201-889-003 | **Oil Seal**<br>Fits GX240 & GX300 series engines | |

E

# Engine Parts

| OREGON | Replaces | Description | Product Code |
|---|---|---|---|

## Honda Oil Seals

| | | | |
|---|---|---|---|
| **49-193** | 91201-890-003 | **Oil Seal**<br>Fits GX240 series engines | |
| **49-207** | 91201-ZE3-004 | **Oil Seal**<br>Fits GX340 series engines | |
| **49-208** | 91202-883-005 | **Oil Seal**<br>Fits GX160 series engines pistons for Honda | |

## Honda Oil Gauge, Dip Stick, & Oil Caps

| | | | |
|---|---|---|---|
| **49-196** | 15600-ZE1-003<br>15600-ZE1-000 | **Oil Cap with Indicator**<br>Fits GX110, GX120, GX140, GX160, & GX200 series engines | |
| **50-454** | 15600-ZG4-003 | **Oil Cap**<br>Fits GX100, GX120, GX160, GX200, GX240, GX270, GX340, GX390, & GX440 series engines | |
| **50-453** | 15600-735-003 | **Oil Cap with Indicator**<br>Fits GX240, GX270, GX340, & GX390 series engines | |

## Lawn Boy Gaskets

| | | | |
|---|---|---|---|
| **50-502** | 602850 | **Carburetor Bowl Gasket**<br>For F series engines, 2-3/4" x 2-1/4" | 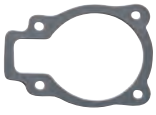 |

E


Can't find what you're looking for?
Try us online to search the latest products available.

OregonProducts.com

| OREGON | Replaces | Description | Product Code |
|---|---|---|---|

## Kohler Gaskets

| | | | |
|---|---|---|---|
| **50-043** | 52-052-03<br>52-041-18<br>52-041-20<br>52-041-50S<br>52-052-04 | **Head Gasket**<br>Fits KT17, KT19, KT21, M18, & M20 Magnums<br>For 17, 19, & 21 HP twin cylinder | |
| **50-041** | 47-041-15<br>47-041-15S<br>47-041-10 | **Head Gasket**<br>For 10, 12, & 14 HP engines | |
| **49-603** | 17 755 06-S | **Gasket Set** - NEW<br>Fits CH260 & CH270 | 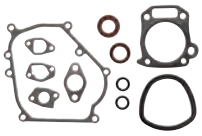 |
| **49-604** | 17 755 44-S | **Gasket Set** - NEW<br>Fits CH440 | 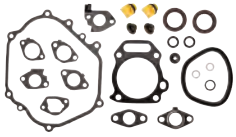 |
| **49-605** | 17 755 43-S | **Gasket Set** - NEW<br>Fits CH395 | |
| **49-906** | 24 153 30-S | **Valve Cover Gasket** - NEW<br>Fits CH18, CH20, CH22, CH25, CH26, CH620, CH640, CH641, CH670, CH680, CH682, CH730, CH732, CH740, CH742, CH745, CH750, CH752, CV18, CV20, CV22, CV23, CV25, CV620, CV640, CV680, CV730, CV740, CV742, ECH730, ECH749, ECV740, ECV749, SV710, SV720, SV730, SV735, & SV740 | 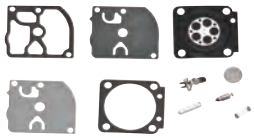 |
| **49-607** | 24 841 04-S | **Head Gasket Kit** - NEW<br>Fits CH25, CH730, CH740, & CV25<br>For 25 HP engines | 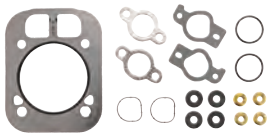 |

## Kohler Miscellaneous Parts

| | | | |
|---|---|---|---|
| **36-416** | 24 462 07-S | Dust Ejector Valve - NEW<br>Fits CH20, CH22, CH23, CH25, CH640, & CH670 | |

## Poulan Gaskets (also see Weed Eater)

| | | | |
|---|---|---|---|
| **49-017** | 19156 | **Carburetor Mounting Gasket**<br>For most trimmers | |

E

# Engine Parts

| OREGON | Replaces | Description | Product Code | |
|---|---|---|---|---|
| **Ryan / Ryobi Gaskets** | | | | |
| **49-170** | 610675 | **Carburetor Mounting Gasket**<br>For all trimmers | | |
| **Tecumseh Gasket Sets** | | | | |
| **50-407** | 33236B<br>33238B | **Gasket Set**<br>Fits LAV30, LAV35, LAV40, & LAV50 series<br>For 3, 3.5, 4, & 5 HP vertical engines | | 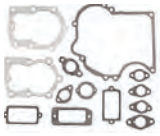 |
| **50-302** | 33279E<br>33279F | **Gasket Set**<br>Fits VM80 & VM100 series<br>For 8 & 10 HP vertical engines | | 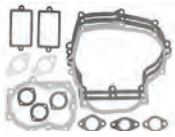 |
| **Tecumseh Gasket & Seals** | | | | |
| **49-150** | 27272<br>27272A | **Air Cleaner Mounting Gasket**<br>For most models | | |
| **49-152** | 33051 | **Air Cleaner Mounting Gasket**<br>For 3–10 HP engines | | |
| **50-204** | 35261<br>26750A<br>37130 | **Base Gasket**<br>Fits LAV 30, 35, 40, 50, TVS, & TNT series<br>For 3, 4, & 5 HP vertical engines | | 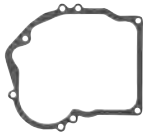 |
| **50-206** | 30684<br>29523 | **Base Gasket**<br>Fits V60, H60, H70, VH60, & VH70 series<br>For 6 & 7 HP engines | | |
| **49-841** | 631028 | **Bowl Gasket**<br>Use on all bowl carbs, square cut | | |
| **49-402** | 26756<br>27141 | **Carburetor Mounting Gasket**<br>Fits LAV 30, 35, V40, 50, 60, 70, VM80, & VM100<br>For 3, 3-1/2, 4, 5, 6, 7, 8, & 10 HP engines | | |
| **49-403** | 33263<br>33861 | **Carburetor Mounting Gasket**<br>Fits V80, VM70, VM80, VM100, & HM70<br>For 7–10 HP engines | | |
| **49-153** | 26754<br>26754A | **Carburetor Mounting Gasket**<br>Fits V, VA, LV, H, LAV, TNT, & TVS series | | |

E

## Tecumseh Gasket & Seals

| OREGON | Replaces | Description | Product Code |
|---|---|---|---|
| **49-157** | 33670A | **Exhaust Gasket**<br>Fits LAV50 & HS50<br>For 5 HP vertical & horizontal engines | |
| **50-548** | 33554<br>33554A | **Head Gasket**<br>Metal clad<br>Fits TVS120 & HS50 5 HP engines | |
| **50-032** | 28938B<br>28938C<br>27904 | **Head Gasket**<br>Fits V50, V60, & VH60<br>For 5 & 6 HP vertical engines | |
| **50-033** | 34041<br>34041A<br>33270 | **Head Gasket**<br>Fits VM70, 80, & 100 series<br>For 7, 8, and 10 HP engines | |
| **49-156** | 34690A | **Intake Manifold Gasket**<br>For 3–10 HP engines | |
| **49-014** | 31688<br>31688A<br>29776 | **Intake Manifold Gasket**<br>For LAV, TVS, TNT, & ECV series engines, 3 thru 5 HP, thick style | |
| **49-016** | 32649<br>32649A<br>30188 | **Intake Gasket**<br>For LAV, TVS, TNT, & ECV models, thick style | |
| **49-411** | 27915<br>27915A<br>30226 | **Manifold Gasket**<br>Fits V50, V60, V70, VM80, & VM100 series<br>For 5, 6, 7, & 8 HP vertical engines | |
| **49-041-0** | 26208<br>25548 | **Oil Seal**<br>ID: 7/8", OD: 1-3/8", thickness: 5/16" | |
| **49-120** | 27234<br>27234A<br>32754 | **Valve Cover Gasket**<br>Fits LAV 22-50, H22-50, HS40, & HS50 series | |
| **49-084** | 27110A | **Bowl Nut Gasket**<br>For most Tecumseh-built carburetors | |

E

# Engine Parts

## Oil Drain Valve

| | | |
|---|---|---|
| **45-118** | Tecumseh 37651<br>Kohler 27-755-14S<br>Kohler 27 755 14S | **Oil Drain Valve**<br>Includes protective dust cap<br>Adapts to most engines 8 HP and larger, 3/8"-18 NPTF thread<br>Connect 1/2" ID hose-to-outlet |

## Universal Intake Gaskets

| | |
|---|---|
| **49-262** | **Intake Gasket**<br>For many Walbro, Tillotson, and Zama |

## Weed Eater Intake Gasket (also see Poulan)

| | | |
|---|---|---|
| **49-017** | 19156 | **Carburetor Mounting Gasket**<br>Fits most trimmers |

## Gasket Assortments

| OREGON | Qty. | Description | Product Code |
|---|---|---|---|
| 08-010 | 114 | Gasket/Intake – Two-Cycle Engines<br>Standard refill qty. 10 | |
| **Components** | | | |
| | 10 | Intake gasket for HU* | |
| | 5 | Intake gasket for HK* | |
| | 5 | Intake gasket for HK* | |
| | 10 | Intake gasket for HCA, HDA* | |
| | 5 | Intake gasket for HL* | |
| | 5 | Intake gasket for HS* | |
| | 10 | Intake gasket for WS** | |
| | 5 | Intake gasket for MDC** | |
| | 2 | Intake gasket for WZ** | |
| | 2 | Intake gasket for WZ** | |
| | 5 | Intake gasket for HL* | |
| | 10 | Intake gasket* | |
| | 10 | Intake gasket* | |
| 49-262 | 10 | Intake gasket | |
| | 10 | Intake gasket | |
| | 5 | Gasket Material | |
| | 5 | Intake gasket* | |

* Tillotson **Walbro See the Gasket section for more informaton

## Gasket Scraper

| OREGON | Description | Product Code |
|---|---|---|
| **42-446-0** | **Wide Blade Gasket Scraper**<br>For gasket removal, nickel chrome plated, “Insulite” plastic handle<br>Length: 11" | |

OREGON Description Product Code

## Fuel Stabilizer

**4205M** **Fuel Stabilizer**
Stabilizes fuel and keeps it fresh
Previously 42-912-1
Keeps gum and varnish from developing
Use in any 2-cycle, 4-cycle, gas or diesel engine fuel systems
Promotes easy starts after storage
Convenient easy measure, easy pour bottle
8 oz. bottle, 12 per carton

Mix:
1 oz. Fuel Stabilizer to 2-1/2 gallons gasoline (entire contents of 8oz. bottle will treat 20 gallons of gasoline).

## Oregon® Fuel Lines

| OREGON | ID | OD | Length | Product Code |
|---|---|---|---|---|
| **Non-compliant with EPA & CARB regulations – E40 compatible** | | | | |
| 07-254 | 1/16" (.062") | 1/8" (.125") | 25' | |
| 07-262 | 1/16" (.062") | 1/8" (.125") | 12-1/2' | |
| 07-263 | .080" | .140" | 12-1/2' | |
| 07-255 | .080" | .140" | 25' | |
| 07-268 | .080" | .140" | 164' | |
| 07-267 | 3/32" (.093") | 3/16" (.187") | 164' | |
| 07-253 | 3/32" (.093") | 3/16" (.187") | 50' | |
| 07-261 | 3/32" (.093") | 3/16" (.187") | 25' | |
| 07-264 | .117" | .211" | 12-1/2' | |
| 07-266 | 3/32" (.093") | 13/64" (.203") | 25' | |
| 07-256 | .117" | .211" | 25' | |
| 07-265 | 1/8" (.125") | 3/16" (.187") | 12-1/2' | |
| 07-257 | 1/8" (.125") | 3/16" (.187") | 25' | |
| 07-259 | 1/8" (.125") | 1/4" (.250") | 25' | |
| 07-251 | 1/8" (.125") | 1/4" (.250") | 50' | |
| 07-260 | 3/16" (.187") | 5/16" (.312") | 25' | |
| 07-252 | 3/16" (.187") | 5/16" (.312") | 50' | |
| 07-258 | 1/4" (.250") | 3/8" (.375") | 25' | |

- Oregon Fuel Line is a specially formulated gas & oil vinyl tubing — made for use with lawnmowers, chainsaws, and snowmobiles
- Maintains air tight seal on fittings — even in extreme temperatures
- Translucent material resists swelling or hardening
- Compare to Tygon®

## Tygon Fuel Lines

| OREGON | I.D. | O.D. | Length | Product Code |
|---|---|---|---|---|
| **Compliant with EPA & CARB regulations; E10 compatible** | | | | |
| 07-450 | 1/4" | 3/8" | 50' | |
| **Compliant with EPA & CARB regulations; E85 compatible** Sold in bags of 10 pieces; priced per piece | | | | |
| 07-551 | 1/8" | 1/4" | 1' | |
| 07-552 | 3/16" | 5/16" | 1' | |
| 07-553 | 3/32" | 3/16" | 1' | |
| 07-555 | 0.080" | 0.140" | 1' | |
| **Non-compliant with EPA & CARB regulations; E10 compatible** | | | | |
| 07-153 | 3/32" | 3/16" | 50' | |
| 07-157 | 1/8" | 3/16" | 25' | |
| 07-151 | 1/8" | 1/4" | 50' | |
| 07-152 | 3/16" | 5/16" | 50' | |
| 07-150 | 1/4" | 3/8" | 50' | |
| 07-154 | 1/16" | 1/8" | 50' | |
| 07-155 | 0.080" | 0.140" | 50' | |
| 07-156 | 0.117" | 0.211" | 25' | |
| 07-158 | 5/16" | 7/16" | 50' | |

Tygon fuel lines, Oregon fuel lines, and Oregon primer bulbs are compatible with up to 10% Ethanol blend fuels unless otherwise stated. Using Ethanol blends higher than 10% may speed deterioration and cause leakage.

F

# Fuel Line / Accessories

| OREGON | Replaces | Description | Product Code |
|---|---|---|---|

## Fuel Lines

| | | | |
|---|---|---|---|
| **07-016** | | **Braided Fuel Line**<br>Grease & oil resistant<br>Non-compliant with EPA and CARB regulations<br>OD: 7/16", ID: 1/4", length: 25 ft | |
| **07-076** | | **Fuel Line**<br>Clear material<br>Compliant with EPA and CARB regulations<br>OD: 3/8", ID: 1/4", length: 50 ft |  |
| **07-008** | Homelite 63744A<br>Homelite 63745A | **Molded Fuel Line**<br>Fits super XL-12<br>Length: 9" | |
| **07-060** | Honda 95001-45200-40S<br>Honda 95001-45140-40<br>Code: 2930873 | **Fuel Line**<br>Fits GX110, 120, 140, & 160 (4.5 x 165)<br>Formed ends | |
| **07-061** | Honda 95001-45300-40S<br>Honda 95001-45222-40<br>Code: 2979748 | **Fuel Line**<br>Fits GX240, 270, 340, & 390 (4.5 x 300)<br>Formed ends | |
| **07-071** | Husqvarna 501 28 59-01 | **Fuel Line**<br>Fits chainsaws & trimmers 140, 162, 266, 36, & 61 | |
| **07-145** | Husqvarna 532 40 11-35 | **Fuel Line** - NEW<br>For Husqvarna<br>Rear Emission | |
| **07-146** | Husqvarna 532 40 11-37 | **Fuel Line** - NEW<br>For Husqvarna | |
| **07-009** | McCulloch 215708<br>McCulloch 301011 | **Molded Fuel Line**<br>Fits McCulloch 1010 series<br>ID: 3/16", length: 6-5/16" | |
| **07-135** | Stihl 1119-358-7702 | **Fuel Line**<br>Fits MS381 | |
| **07-136** | Stihl 1124-358-7700 | **Fuel Line**<br>Fits MS640, 660, 780, 088, & 084 | |
| **07-144** | Stihl 1121 358 7700 | **Fuel Line** - NEW<br>Fits Stihl 024, 026, MS240, & MS260 | |

F

## Fuel Lines

| OREGON | Replaces | Description | Product Code |
|---|---|---|---|
| **07-072** | Stihl 1127-358-7702 | **Fuel Line**<br>Fits 029, 034, 036, & 039 | |
| **07-134** | Stihl 1128-358-7701 | **Fuel Line**<br>Fits MS341, 361, 440, & 460 | |
| **07-074** | Stihl 4128-358-0800 | **Fuel Line**<br>Fits FS350 & FS400 | |
| **07-075** | Stihl 1123-358-7701 | **Fuel Line**<br>Fits 021, 023, & 025 | |
| **07-167** | Stihl 1123-141-8600 | **Impulse Line, Chainsaw** - NEW<br>Fits Stihl 021, 023, 025, MS210, MS210C, MS230, MS230C, MS250, & MS250C | |
| **55-139** | Shindaiwa 20000-85303 | **Fuel Tube Assembly**<br>Fits T25, C25, & C35 model trimmers | |
| **07-011** | Shindaiwa 20011-85451<br>Shindaiwa 20011-85459 | **Fuel Line**<br>Fits models T25, T27, C35, & B45 | |
| **07-142** | Husqvarna 581493301<br>Red Max 579138304<br>Red Max 579138306<br>Red Max 579138307<br>Red Max 581493301 | **Fuel Line Kit** - NEW<br>Fits Red Max EBZ6500, EBZ6500RH, EBZ7500, EBZ7500RH, EBZ8500, EBZ8500RH, & HBZ2610 blowers; BCZ230TS, BCZ2460S, BCZ2460TS, BCZ2650S, BCZ2650TS, & BCZ2660TS brushcutters; HBZ2650F, HEZ2460F, & HEZ2460S edgers; PSZ2460 & PSZ2465S polesaws; LRTZ2460, SGCZ2460S, SRTZ2460, SRTZ2460F & TR2350S trimmers | |

## Fuel System Breathers & Grommets

| | | | |
|---|---|---|---|
| **55-157** | Echo 131300-56430 | **Vent Assembly**<br>Fits models GT1100, 2000, 2100, 2102, 2103, 2400, SRM 1500, 1501, 2100, 2300, 2301, 2400, 2500, 2501, 2510, 3000, 3800, SRS 2100, PE 2400, PB1000/1010, 2400, ES 2000, & SHR 2100<br>For 3/16" line, OD: 3/8", length: 1" | |
| **07-162** | Maruyama 261696 | **Breather Assembly**<br>Fits Maruyama BC3200, BC420H, BC2300, BC2600, BC2600H, BCL2250, & BC200 | |

Tygon® fuel lines, Oregon fuel lines, and Oregon primer bulbs are compatible with up to 10% Ethanol blend fuels unless otherwise stated. Using Ethanol blends higher than 10% may speed deterioration and cause leakage.

F

# Fuel Line / Accessories

| OREGON | Replaces | Description | Product Code |
|---|---|---|---|

## Fuel System Breathers & Grommets

| | | | |
|---|---|---|---|
| **07-126** | Echo 132115-46730<br>Echo 1370030 | **Grommet**<br>OD: 5/8", thickness: 1/2"<br>Three holes | |
| **07-099** | Maruyama 597949 | **Fuel Grommet**<br>Fits Maruyama BL4500SP & BL4600SP | |

## Fuel System Kits

| | | | |
|---|---|---|---|
| **07-090** | 13120519832<br>13120519831 | **Fuel Filter Kit**<br>Fits Echo SRM2102, SRM1500, SRM2300, HC160, HC180, HC200, PB265, PB1000, PB255LN, HC2400, CS340, CS400, CS370, & CS450<br>Includes replacement parts for 13211544330 grommet, V471001860 line, 13201049730 line, and 13201309820 clip | |
| **07-085** | 13120519832<br>13120519831 | **Fuel Filter Kit**<br>Fits Echo PB403, PB413, PB460, PB460LN, PB500H, PB500T, PB600PB610, PB620, PB413, PB413H, & PB500T, and Shindaiwa EC7500 engine cut-off saw. Includes replacement parts for 13211555930 grommet, A356000031 vent assembly, V490001230 clip, V471000110 line, 13201056330 line , 13201052030 line, and 13120519831 | |
| **07-010** | Echo 132007-04920<br>McCulloch 217387 | **Fuel Line with Grommet**<br>Grommet fits 3/8" hole<br>ID: 3/32", length: 6" | |
| **07-127** | Echo 132115-46730 | **Fuel Line with Grommet**<br>Oregon® 07-126 grommet with 8" section of fuel line (3) | |
| **07-022** | Homelite DP181767 | **Fuel Line with Filter** | |
| **55-119** | Kawasaki 49019-2065 | **Fuel Line with Filter Assembly**<br>For trimmer models TD18, TD22, TD24, TD33, TD40, & TD48 | |
| **07-097** | 265752 | **Fuel Line with Filter**<br>Fits Maruyama BC200, BC230, BC260, BC2550, & BC2800 | |

F

| OREGON | Replaces | Description | Product Code |
|---|---|---|---|

## Fuel System Kits

| | | | |
|---|---|---|---|
| **07-098** | 268062 | **Fuel Line with Filter**<br>Fits Maruyama BC3020 & BL3100 | |
| **55-110** | Stihl 4112-350-3500 | **Fuel Line Assembly**<br>Fits FS80 trimmer | |

## Hose Clamps

| | | | |
|---|---|---|---|
| **02-041** | | **Hose Clamp**<br>For 1/8" fuel line, ID: .310" | |
| **02-040** | | **Hose Clamp**<br>For 1/4" and 3/16" fuel line, ID: .455" | |
| **07-140** | Husqvarna 532 12 34-87 | **Hose Clamp** - NEW<br>For Husqvarna | |
| **02-700** | John Deere TY22462 | **Adjustable Clamp**<br>Adjusts from 7/32" to 5/8" | |
| **02-701** | John Deere TY22465 | **Adjustable Clamp**<br>Adjusts from 9/16" to 1-1/16" | |

## Filter Bowl Assembly

| | | | |
|---|---|---|---|
| **07-001** | Briggs & Stratton 393169<br>Briggs & Stratton 690612<br>Kohler 210101<br>Tecumseh 32439<br>Clinton 293-32-5<br>John Deere PT4337<br>Wisconsin LP43 | **Fuel Filter**<br>Use with Oregon® 49-128 gasket and 07-003 replacement bowl | |
| **49-128** | Briggs & Stratton 68477<br>Briggs & Stratton 692190 | **Fuel Bowl Gasket**<br>Fits Oregon 07-001 | |

## Fittings

| | | | |
|---|---|---|---|
| **07-393** | Honda 16955-ZE1-000<br>Code: 1427459 | **Fuel Tank Joint**<br>Fits GX110, 120, 140, 160, 240, 340, & 390 | |

F

# Fuel Line / Accessories

| OREGON | Replaces | Description | Product Code | |
|---|---|---|---|---|
| **Fittings** | | | | |
| **02-860** | Briggs & Stratton 67218 | **Metal Fitting**<br>1/8" pipe thread<br>90° elbow without screen | | |
| **02-861** | Briggs & Stratton 230318 | **Metal Fitting**<br>1/8" pipe thread<br>Straight without screen | | |
| **07-390** | MTD 751-3054 | **"L" Fuel Fitting (Metal)**<br>For MTD & others<br>Size: 1-3/8" x 1-1/16"<br>1/4" and 7/16" nipples<br>Use with Oregon 07-392 fuel tank bushing | | |
| **07-391** | Briggs & Stratton 698183 | **"I" Fuel Fitting (Metal)**<br>For MTD & others<br>Length: 1-1/2"<br>1/4" and 7/16" nipples<br>Use with Oregon 07-392 fuel tank bushing | | |
| **Fuel Line Shut-Offs** | | | | |
| **07-125** | Briggs & Stratton 698181 | **Fuel Shut- Off Valve**<br>For 1/4" fuel line<br>In-line 90°<br>1/4 turn operation | | |
| **07-406** | Briggs & Stratton 698183<br>Briggs & Stratton 494768<br>Briggs & Stratton 493960<br>Snapper 1-6325 | **Fuel Shut-Off Valve**<br>In-line shutoff<br>1/4" nipples<br>Composite material | | |
| **07-408** | Briggs & Stratton 399517<br>Briggs & Stratton 396244<br>Briggs & Stratton 698182 | **Fuel Shut-Off Valve**<br>1/4" nipple<br>Composite material | | |
| **07-409** | Honda 16950-ZG9-M02<br>Code: 5028923 | **Fuel Shut-Off Valve**<br>For Honda models GXV135 & GXV160 | | |
| **07-403** | Scag 48568 | **Fuel Shut-Off Valve**<br>Heavy-duty ball valve<br>For 1/4" fuel line<br>In-line shutoff | | |
| **07-404** | MTD 751-0171 | **Fuel Shut-Off Valve**<br>Has screen filter<br>1/4" nipple<br>Use with Oregon® 07-392 fuel tank bushing | | |

F

| OREGON | Replaces | Description | Product Code |
|---|---|---|---|

## Fuel Line Shut-Offs

| | | | |
|---|---|---|---|
| **07-407** | | **Fuel Shut-Off Valve**<br>Has screen filter<br>1/4" nipple<br>1/4" turn ball valve | |
| **07-406** | Snapper 1-6325<br>Briggs & Stratton 494768<br>Briggs & Stratton 493960 | **Fuel Shut-Off Valve**<br>In-line shutoff<br>1/4" nipple<br>Composite material | |
| **69-507** | | **Hanging Display Card**<br>20 pack of Oregon 07-406<br>Priced per card, not individually | |
| **07-400** | Bolens 1703896<br>Bolens 1718029<br>Gravely 18563<br>John Deere AM31850<br>John Deere PT8655<br>Noma 42879<br>Toro 304-71<br>Lawn Boy 677052 | **Fuel Shut-Off Value**<br>Metal (zinc)<br>Tank mount with screen<br>1/8" pipe thread<br>1/4" nipple (fuel line mount)<br><br>Scag 48056<br>AMF 42879 | |

## Fuel Pumps

| | | | |
|---|---|---|---|
| **07-700** | Briggs & Stratton 808656<br>Kohler 24 393 16 | **Pulse Fuel Pump**<br>For many models | |

## Fuel Tank Bushing

| | | | |
|---|---|---|---|
| **07-392** | Bolens 173-8433<br>MTD 735-0149<br>Noma 42690<br>Simplicity 1654930<br>Snapper 1-2337<br>Toro 46-6560<br>Wheel Horse 1654930 | **Fuel Tank Bushing**<br>For 33/64" diameter fuel tank<br>Fits Oregon® 07-390, 07-391, & 07-404<br><br><br><br>Scag 48309<br>Ariens 75093 | |

F

# Fuel Line / Accessories

| OREGON | Replaces | Description | Product Code |
|---|---|---|---|

## Primer Bulbs

| | | | |
|---|---|---|---|
| **49-058** | Briggs & Stratton 494408<br>Briggs & Stratton 694394 | **Primer Bulb**<br>Fits Quantum series engines, 3.5, 3.75, and 4 HP<br>For models with Pulsa-prime carburetors | |
| **49-079** | Briggs & Stratton 496115<br>Briggs & Stratton 694395 | **Primer Bulb**<br>Fits Quantum engines, 5, 5.5, and 6 HP | |
| **49-326** | Cub Cadet/MTD 951-10639<br>Cub Cadet/MTD 951-10639<br>Cub Cadet/MTD 951-10639<br>Cub Cadet/MTD 751-10639A<br>Cub Cadet/MTD 751-10639 | **Primer Assembly**<br>Fits 31A model series snow throwers (2008–2014) | |
| **07-088** | Echo 12318139130<br>Tanaka 6685139 | **Primer Bulb**<br>Fits Echo PB770, PB770H, PB770T, SRM, CS310, CS340, CS370, CS400, SRM400, PB770T, & PB770, & Tanaka TBC300, TBC2800, TBC265, TBC270, TBC250, THT2510, THT2510-2540, & MTD2522 | |
| **07-084** | Echo 12538108660<br>Maruyama 261874 | **Primer Bulb**<br>Fits Echo PB265L, PB403H, PB403T, PB460LN, PB620, PB620H, PE2400, PE265, GT200, GT2000, & GT230, & Maruyama BC200, BC230, BC260, BC2550, BC2800, BCL2250, BC3200, BC3100, BL4500SP, & BL4600SP | |
| **55-092** | Kawasaki 49043-2058<br>Kawasaki 310850-6680A | **Elbow & Primer**<br>Fits models KT12, KT18, TD24, & TD33 trimmers | |
| **07-073** | Stihl 4130-350-6200 | **Primer Bulb with Line**<br>Fits FS350 & FS400 | |
| **55-138** | Ryobi 683974 | **Fuel Line & Primer Assembly** | |
| **49-034** | Tecumseh 632047 | **Primer Bulb**<br>Fits TNT100, TNT120, ECV105, ECV110, ECV120, & TVS series with retainer clip<br>For dual system carb, non-vented<br>OD: 1", height: 3/4" | |



⚠ Tygon® fuel lines, Oregon fuel lines, and Oregon primer bulbs are compatible with up to 10% Ethanol blend fuels unless otherwise stated. Using Ethanol blends higher than 10% may speed deterioration and cause leakage.

## Primer Bulbs

| OREGON | Replaces | Description | Product Code |
|---|---|---|---|
| **49-085** | Tecumseh 36045A | **Primer Bulb**<br>Fits VLV-126, VLV-50, VLV-60, VLV-65, & VLV-66 model Vector series engines & LEV non-vented | |
| **55-187** | Walbro 188-506 | **Primer Bulb**<br>Fits model WA-135, WA-148A, WA-150, WA-154, WA161, & WA-162 carburetors | |
| **55-188** | Walbro 188-508 | **Primer Bulb**<br>Fits model HDA-97 carburetor | |
| **55-189** | Walbro 188-509 | **Primer Bulb**<br>Fits model HDA-51, WA-180, WA-181, WA-184, WA-185, WA-187, WA-194, WT139, WT-145, WT-184, WT-243, & WT50 carburetors | |
| **49-026** | Walbro 188-11<br>Echo 123181-26030<br>Hoffco 211844H<br>Shindaiwa 20036-81670 | **Primer Bulb**<br>For WZ series carburetors | |
| **49-027** | Walbro 188-13<br>Green Machine 4467213<br>Homelite 01201<br>Homelite UP04802<br>Red Max 1491-61510 | **Primer Bulb**<br>For HDA series carburetors |  |
| **49-028** | Zama 0057003<br>Homelite A01195A | **Primer Bulb**<br>For C1Q carburetors |  |

## Duck Bill Valve

| | | | |
|---|---|---|---|
| **07-004** | Homelite 69451<br>Homelite UP06862 | **Duck Bill Valve**<br>For fuel caps<br>Fits XL, XL2, & Super 2 chainsaws | |

F

⚠ Tygon® fuel lines, Oregon fuel lines, and Oregon primer bulbs are compatible with up to 10% Ethanol blend fuels unless otherwise stated. Using Ethanol blends higher than 10% may speed deterioration and cause leakage.

# Fuel Line / Accessories

| OREGON | Replaces | Description | Product Code |
|---|---|---|---|

## Fuel Tanks

| | | | |
|---|---|---|---|
| **07-600** | Honda 17510-ZE1-020ZA<br>Code: 3683661 | **Fuel Tank**<br>Fits GX160 | |
| **07-601** | Honda 17510-ZE2-10ZA<br>Code: 3690070<br>Honda 17510-ZE2-20ZA | **Fuel Tank**<br>Fits GX240 | |
| **07-602** | Honda 17510-ZE3-010ZA<br>Code: 3713278<br>Honda 17510-ZE3-20ZA<br>Honda 17510-ZE3-030ZA | **Fuel Tank**<br>Fits GX360, GX390, & GX340 | |

## Fuel Caps

| | | | |
|---|---|---|---|
| **07-303** | Briggs & Stratton 298425<br>Briggs & Stratton 493982 | **Fuel Cap**<br>For 3, 3.5, 4, & 5 HP engines<br>Fits 60000, 80000, 92000, 100000, & 130000 series<br>ID: 1-1/2" (high dome) | |
| **07-304** | Briggs & Stratton 692046<br>Briggs & Stratton 397974<br>John Deere PT11028 | **Fuel Cap**<br>Fits all Max and Quantum series engines<br>and 100700 series engines<br>For 3-1/2 thru 5 HP | |
| **07-307** | Briggs & Stratton 490075<br>Briggs & Stratton 494559<br>John Deere PT 15868 | **Fuel Cap**<br>Fits 3–5 HP horizontal engines model series 90200,<br>91200, 133200, & 135200<br>1/4 turn style with two locking ears | |
| **55-123** | Echo 131004-06320<br>Snapper 4-2110 | **Fuel Cap**<br>For most Echo trimmers with Kioritz engines<br>Also fits model PB200 blower<br>OD: 1-3/16" | |
| **55-120** | Echo 131004-0632-0<br>John Deere PT9498 | **Fuel Cap**<br>For GT series trimmer prior to 1991 and<br>many brands and models<br>ID: 1-3/16" | |
| **55-122** | Echo 131004-40930<br>Echo 131004-48730<br>Echo 131004-55730<br>Echo 131004-55830<br>John Deere AM105998 | **Fuel Cap**<br>For newer GT series trimmers (1992 & newer) | |

F

## Fuel Caps

| OREGON | Replaces | Description | Product Code |
|---|---|---|---|
| **55-008** | Echo 131004-06610<br>Echo 131600-09860<br>Echo 131600-09861 | **Fuel Cap**<br>Vented<br>Fits 4500 & 4600 model blowers<br>ID: 1-1/2" | |
| **07-317** | Exmark 513508 | **Fuel Cap** | |
| **07-024** | Homelite DA06486<br>Homelite UP00106380 | **Fuel Cap**<br>Fits models Z625CDV, Z625CD, Z725DCV, Z7825SD, Z725CB, Z830SB, D630CD, D732DCV, D830SD, D830CV, D830SV, Z725SE, & Z7825CD<br>OD: 2", ID: 1-19/32" threaded | |
| **55-124** | Homelite A-00982-B | **Fuel Cap**<br>For ST series trimmers with straight shaft<br>OD: 1-1/2" | |
| **07-025** | Honda 17620-ZL8-003 | **Fuel Cap**<br>Fits GCV130 & GCV160 model engines | |
| **55-126** | Honda 17620-ZE2-W00 | **Fuel Cap**<br>Fits 4 – 8 HP engine models GX110, GX120, GX140, GX160, & GX240<br>Tang style cap for 1-1/2" opening | |
| **07-318** | Honda 17620-ZE7-000<br>Code: 2289833 | **Fuel Cap**<br>Fits GXV120 & GXV160 | |
| **07-319** | Honda 17620-ZH7-023<br>Code: 5344817 | **Fuel Cap**<br>Fits models GX340 & GX390 | |
| **55-125** | Honda 176200-ZH7-013<br>Honda 17620-ZH7-023 | **Fuel Cap**<br>Fits 4 – 8 HP engine models GX110, GX120, GX140, GX160, & GX240<br>Tang style cap for 1-1/2" opening | |
| **55-018** | Kawasaki 14069-2056<br>Tanaka 695-000510 | **Breather**<br>For brushcutters and trimmers<br>Fits model TA024 and some KAAZ trimmers<br>Use with Oregon® 55-017 | |

F

# Fuel Line / Accessories

| OREGON | Replaces | Description | Product Code | |
|---|---|---|---|---|
| **Fuel Caps** | | | | |
| **55-017** | Kawasaki 51049-2057<br>Kawasaki 51049-2091 | **Fuel Cap – Vented**<br>For brushcutters and trimmers<br>Fits model TA024, some KAAZ trimmers, and Husqvarna 140 blower<br>ID: 1-1/2" | | |
| **55-127** | Maruyama 263800 | **Fuel Cap**<br>Fits MC2300, MC2600, & MC3210 | | |
| **07-026** | Mitsubishi KF05011DA | **Fuel Cap**<br>Fits TL33, TL43, & TL53 | | |
| **07-309** | MTD 751-3111<br>MTD 951-3111<br>MTD 751-0603<br>Murray 92317<br>Encore 363257<br>John Deere AM107344 | **Fuel Cap**<br>Fits MTD riders, Deere STX series tractors and SRX series riders<br>Neck: 2-1/4" | | |
| **07-315** | Scag 48311<br>Bobcat 48587<br>Bunton PL8122<br>Murray 23711<br>Power King 23-7602<br>Wheel Horse 111474 | **Fuel Cap**<br>ID: 2-1/4" | | |
| **55-097** | Shindaiwa 200000-85200 | **Fuel Cap - Non-Vented**<br>Fits models T20, T25, C25, B45, LT20, F21, C20, & T/C24<br>ID: 1-/2" | | |
| **07-308** | Snapper 1-2515 | **Fuel Caps**<br>For Snapper rider with vent<br>Neck: 2-1/4" | | |
| **56-019** | Stihl 0000-350-0520 | **Fuel Cap**<br>Fits 023, 025, 026, & 028 | | |
| **07-131** | Stihl 1130-350-0500 | **Fuel Cap**<br>Fits 017, 018, 019, MS170, 180, & 190 | | |

F

## Fuel Caps

| OREGON | Replaces | Description | Product Code | |
|---|---|---|---|---|
| **07-132** | Stihl 0000-350-0531 | **Fuel Cap**<br>Fits 066 & MS660 | | |
| **55-109** | Stihl 4114-350-0502 | **Fuel Cap**<br>Fits FS80 (new style) | | |
| **55-102** | Stihl 4126-350-0501C | **Fuel Cap**<br>Fits FS56, 66, 81, & FS86 | | |
| **55-106** | Tanaka 595-0165-C-92 | **Fuel Cap**<br>For trimmers<br>Also fits Kawasaki<br>ID: 1-1/4" | | |
| **55-132** | Tanaka 5950165C91<br>Tanaka 5950423Q910<br>Tanaka 5950423Q90 | **Fuel Cap**<br>Fits models TBC265 & TBC500 string trimmers and THT200, THT212, THT230, THT232, & THT240 hedge clippers<br>OD: 1-3/8" | | |
| **07-314** | Tecumseh 35355 | **Fuel Cap**<br>For most plastic fuel tanks<br>Opening on fuel tank: 1-1/2" | | |
| **07-013** | Toro 42-0680 | **Fuel Cap**<br>Fits S-200 & S-620 snow throwers | | |
| **07-312** | | **Fuel Cap**<br>For 2-1/4" neck<br>Fits Toro Suzuki 4-cycle, Toro commercial, Poulan Pro, Roper, & John Deere STX30 & STX38 | | |

F

# Fuel Line / Accessories

| OREGON | Replaces | Description | Product Code |
|---|---|---|---|

## In-Line Fuel Filters

| | | | |
|---|---|---|---|
| **07-112** | Briggs & Stratton 492836<br>Briggs & Stratton 493629<br>Briggs & Stratton 691035<br>Cushman 825619<br>Toro 18-1520 | **In-Line Fuel Filter, Metal**<br>For 5/16" fuel line | |
| **07-160** | | **Fuel Filter, Translucent**<br>For 1/4" and 5/16" fuel line<br>OD: 1-5/8", length: 3-1/2"<br>80 micron | |
| **07-107** | Bobcat 38666<br>John Deere AM108356<br>Briggs & Stratton 493629<br>Briggs & Stratton 691035<br>Tecumseh 34279A | **Fuel Filter, Clear**<br>For 1/4" fuel line<br>OD: 1-5/8", length: 2-3/8"<br>80 micron | |
| **07-102** | Bolens 1727491<br>John Deere AM36483<br>Snapper 1-1777 | **In-Line Fuel Filter, White**<br>For outboards, lawn mowers, go-karts, motor scooters, and industrial engines<br>OD: 7/8", length: 2-1/8"<br>1/4" nipple<br>75 micron | |
| **69-509** | | **Hanging Display Card**<br>20-pack of Oregon® 07-102<br>Priced per card, not individually | |
| **07-129** | 16955-ZE1-000<br>16956-ZE1-000 | **Fuel Filter, Brass**<br>Fits BX120, 140, 160, GX200, 270, 340, & 390 | |
| **07-100** | John Deere AM38708<br>Snapper 7-6572<br>Kees 363333<br>Briggs & Stratton 394358 | **In-Line Fuel Filter, White**<br>For engines with fuel pumps<br>OD: 1-3/8", length: 1-3/4"<br>1/4" nipple<br>75 micron | |
| **69-511** | | **Hanging Display Card**<br>20-pack of Oregon 07-100<br>Priced per card, not individually | |

Oregon in-line fuel filters are E85 compatible unless otherwise stated.

F

## In-Line Fuel Filter

| OREGON | Replaces | Description | Product Code |
|---|---|---|---|
| **07-101** | John Deere PT4265<br>Toro 42-5240<br>Snapper 1-4359<br>Scag 48057-02<br>Briggs & Stratton 298090 | **In-Line Fuel Filter, Red**<br>For outboards, lawn mowers, chainsaws,<br>go-karts, motor scooters, and industrial engines<br>OD: 1-3/8", length: 1-3/4"<br>1/4" nipple<br>125 micron | |
| **69-508** | | **Hanging Display Card**<br>20-pack of Oregon® 07-101<br>Priced per card, not individually | |
| **07-103** | John Deere AM116304<br>Onan 149-2206-01 | **In-Line Fuel Filter, Translucent**<br>For 1/4" or 5/16" fuel line<br>OD: 1-5/8", length: 3-3/4"<br>30 micron<br>Heavy-duty | |
| **69-510** | | **Hanging Display Card**<br>8-pack of Oregon 07-103<br>Priced per card, not individually | |
| **07-064** | Briggs & Stratton 695666 | **In-Line Fuel Filter, Translucent**<br>For 1/4" fuel line<br>OD: 1-1/8", length: 3-1/2"<br>30 micron | |
| **07-141** | Husqvarna 506264111 | **In-Line Fuel Filter** - NEW<br>Fits Husqvarna 36, 40, 41, 42, 45, 50, 51, 61, 66, & 394<br>For 3/16" fuel line<br>Inner diameter: 3/16" | |
| **07-062** | Kawasaki 49019-1055 | **In-Line Fuel Filter, Translucent**<br>For 5/16" fuel line | |
| **07-063** | Kawasaki 49019-7001<br>Kawasaki 49019-0707<br>Kawasaki 49019-0014<br>Kohler 24-050-10S | **In-Line Fuel Filter, Translucent**<br>For 1/4" fuel line<br>15 Micron | |
| **07-122** | Kawasaki 49019-7005 | **Fuel Filter, Translucent**<br>For 1/4" fuel line<br>OD: 1-5/8", length: 2-3/8"<br>30 micron | |

F

# Fuel Line / Accessories

| OREGON | Replaces | Description | Product Code |
|---|---|---|---|

## In-Line Fuel Filter

Oregon® in-line fuel filters are E85 compatible unless otherwise stated.

| | | | |
|---|---|---|---|
| **07-111** | Kohler 24-050-02<br>Toro 83-1320<br>Toro 94-2690 | **In-Line Fuel Filter, Metal**<br>Fits Toro Greensmaster 300, 3000, 3100, and Sand Pro<br>For 1/4" fuel line<br>10 micron | |
| **07-331** | Kohler 25-050-07S | **Fuel Filter, White**<br>For 1/4" and 5/16" fuel line<br>OD: 5/16", length: 2-1/4"<br>75 micron | |
| **07-332** | Kohler 25-050-22S | **Fuel Filter, Translucent**<br>For 1/4" and 5/16" fuel line<br>Plastic body with blue screen cage<br>OD: 1-1/2", length: 4-1/2"<br>51 micron | |
| **07-104** | Kubota 13351-4301-0<br>Kubota 12581-43012<br>Kubota 12581-43010<br>Kubota 12691-43010 | **In-Line Fuel Filter, Translucent**<br>5/16" nipple<br>OD: 1-7/8", length: 3-1/2" | |
| **07-110** | | **In-Line Fuel Filter, Clear**<br>For 5/16" fuel line<br>80 micron | |
| **07-124** | Universal | **Fuel Filter, Translucent**<br>For 1/4" or 15/16" fuel line<br>OD: 1-5/8", length: 3-3/4"<br>10 micron | |
| **07-143** | Husqvarna 579 13 83-09 | **Fuel Filter Assembly** - NEW<br>Fits Red Max/Husqvarna 226R, 226RJ, & 236R | |

## In-Tank Fuel Filter

| | | | |
|---|---|---|---|
| **07-215** | | **Fuel Filter**<br>For 3/16" inlet<br>Fits 2-cycle engines on chainsaws, trimmers, and blowers using porous plastic filter<br>40 micron | |
| **07-206** | Echo 131205-06530<br>John Deere PT7610<br>Tillotson OW-802<br>Toro 34-7260<br>Weed Eater 91481 | **Fuel Filter**<br>For 3/16" fuel line<br>OD: 9/16", length: 1-1/2" | |

Oregon in-tank fuel filters are compatible with up to 10% Ethanol blend fuels unless otherwise stated. Using Ethanol blends higher than 10% may speed deterioration.

F

## In-Tank Fuel Filter

| OREGON | Replaces | Description | Product Code |
|---|---|---|---|
| **07-118** | Honda 17672-ZE2-W01<br>Code: 4270864 | **Fuel Filter**<br>Fits models GX160, GX240, GX340, & GX390 | 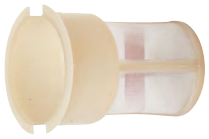 |
| **07-201** | Homelite 64083-1<br>Poulan 23364<br>Tillotson 95-182 | **Fuel Filter, Felt**<br>Fits Oregon® 07-206<br>1" L x 1/4" ID x 9/16" OD | |
| **07-213** | Husqvarna 503-4432-01 | **Fuel Filter**<br>For 3/16" fuel line<br>Fits models 36, 40, 41, 42, 45, 50, 51, 61, 66, & 394 Pro 30<br>Micron |  |
| **07-207** | John Deere PT12362<br>Tillotson OW-497<br>Weed Eater 24841 | **Fuel Filter**<br>For 1/8" fuel line<br>OD: 13/16", length: 1-1/2" | |
| **07-163** | Kohler 17 050 15-S<br>Kohler 17 050 20-S | **Fuel Tank Filter - NEW**<br>Fits Kohler Command Series CH260, CH270, CH395 & CH440<br>Length: 2-3/16", top outer diameter: 1-7/16",<br>bottom outer diameter: 1-3/16" | |
| **07-164** | Kohler 24 050 13-S | **Fuel Filter - NEW**<br>Fits Kohler CH18-CH25, CH620-CH740, CH750, CH940-CH1000, CV17-CV25, CV670-CV750, CV940-CV1000, LH630-LH755, LV625-LV680, SV710-SV740, & SV810-SV840<br>For 1/4" fuel line, inner diameter: 1/4" | |
| **07-165** | Kohler 25 050 22-S | **Fuel Filter - NEW**<br>Fits KohlerCH11-CH16, CH18-CH25, CH410-CH450, CH620-CH730, CV13-CV25, CV430-CV493, CV670-CV730, SV470-SV740, TH16, TH18, TH520, & TH575<br>For 1/4" and 5/16" fuel lines<br>Inner diameter: 1/4" | |
| **07-166** | Honda 16910-ZE8-015 | **Fuel Filter - NEW**<br>Fits Honda engines GX100 KRS2, GX100U (KRS2, KRSB), GX160U1 VTH4, GX360K1, GX390U1 (VS49, VSD4, VTH4), GX610, GX610K1, GX610R1, GX610U1, GX620, GX620K1, GX620R1, GX620U1, GX630, GX670, GX670R, GX670U, GXV160UH2, GXV270, GXV340, GXV340A2, GXV340K1, GXV340K2, GXV340RT2, GXV340UA2, GXV340UT2, GXV390, GXV390A1, GXV390K1, GXV390RT1, GXV390UA1, GXV390UT1, GXV610, GXV610K1, GXV610R1, & GXV610U1 | |

Oregon in-tank fuel filters are compatible with up to 10% Ethanol blend fuels unless otherwise stated. Using Ethanol blends higher than 10% may speed deterioration.

F

# Fuel Line / Accessories

## In-Tank Fuel Filter

| OREGON | Replaces | Description | Product Code | |
|---|---|---|---|---|
| **07-094** | Maruyama 267328 | **Fuel Filter**<br>Fits Maruyama BC200C, BC2300, BC2600, BC3200, & BC4200 | | |
| **07-200** | McCulloch 93720<br>McCulloch 216985<br>Homelite 49422 | **Fuel Filter**<br>For most saws with 1/8" in-tank pickup<br>OD: 1/2", length: 1-1/4" | | |
| **07-204** | McCulloch 63932 | **Felt Fuel Filter**<br>OD: 3/4", length: 1" | | |
| **07-066** | Poulan 530095646 | **Fuel Filter**<br>For 1/8" fuel line<br>OD: 1/2", length: 1-1/2" | | |
| **55-112** | Shindaiwa 20011-85400 | **Fuel Line with Filter**<br>Fits models T20, T25, C25, C35, B45. LT20, HT20 & C20 trimmers, also saws, blowers, and hedge trimmers<br>Lead weight<br>Length: 4-3/8" | | |
| **07-133** | 0000-350-3506 | **Fuel Filter**<br>Fits FS410, FS420, FS300, FS350, FS400, FS450, & FS480<br>OD: 3/4", length: 1-3/4" | | |
| **07-109** | Stihl 1115-350-3503 | **Fuel Filter**<br>For 1/4" fuel line on most models of chainsaws<br>OD: 23/32", length: 1-3/4" | | |
| **07-217** | Stihl 1120-350-3500 | **Fuel Filter**<br>Fits chainsaw models 021, 023, 025, 020T, 070, 034, 038, 029, & 036 | | |
| **07-205** | Stihl 1110-358-1800 | **Foam Fuel Filter**<br>OD: 5/8", length: 1-1/4" | | |
| **07-092** | Tanaka 6684620 | **Fuel Filter**<br>Fits Tanaka TBC250SF, TBC260SF, TBC340PF, TBC5500, TBC450, TBC280, & TBC225 | | |
| **07-094** | Tanaka 6692273 | **Fuel Filter**<br>Fits Tanaka Brush Cutter TBC400, TBC422, TBC500, TBC600, TBL4600, TBL500, & TBL7800 | | |

Oregon in-tank fuel filters are compatible with up to 10% Ethanol blend fuels unless otherwise stated. Using Ethanol blends higher than 10% may speed deterioration.

F

## In-Tank Fuel Filter

| OREGON | Replaces | Description | Product Code |
|---|---|---|---|
| **07-214** | Walbro 125-527 | **Fuel Filter**<br>Dual filtration, felt and stainless steel mesh element<br>Suitable for engines up to 30 CC | |
| **07-219** | Walbro 125-528 | **Fuel Filter**<br>For engines up to 80 CC<br>3/16" inlet | |
| **07-137** | Walbro 125-552 | **Fuel Filter, Felt**<br>OD: 3/4", length: 1-1/4" | |
| **07-208** | Zama ZF2 | **Fuel Filter**<br>For 3/16" fuel line<br>Use on small CC engines<br>175 micron | |
| **07-209** | Zama ZF3 | **Fuel Filter**<br>For 1/8" fuel line<br>Use on larger CC engines<br>175 micron | |
| **07-210** | Zama ZF4 | **Fuel Filter**<br>For 3/16" fuel line<br>Use on larger CC engines<br>175 micron | |
| **07-211** | Zama ZF5 | **Fuel Filter**<br>For 1/4" fuel line<br>Use on larger CC engines<br>175 micron | |

## In-Tank Fuel Filter Assortment

| OREGON | Qty. | Description | Product Code |
|---|---|---|---|
| 08-075-0 | 74 | In-Tank Fuel Filters<br>Standard refill quantity: 10 | |

### Components

| | | | |
|---|---|---|---|
| 07-200 | 10 | 1/8" Inlet – Plastic Case | |
| 07-201 | 10 | Felt Only – fits 07-206 | |
| 07-204 | 5 | Felt Style – for McCulloch | |
| 07-205 | 5 | Foam Style – for Stihl | |
| 07-206 | 12 | 1/8" Inlet, Felt Style – Small | |
| 07-207 | 10 | 1/8" Inlet, Felt Style – Large | |
| 07-215 | 7 | 3/16" Inlet – Porous Plastic | |

Oregon in-tank fuel filters are compatible with up to 10% Ethanol blend fuels unless otherwise stated. Using Ethanol blends higher than 10% may speed deterioration.

F

# Fuel Line / Accessories

| OREGON | Replaces | Description | Product Code |
|---|---|---|---|

## Fuel Grommets

| | | | |
|---|---|---|---|
| **07-147** | Red Max T155185300<br>Red Max DP181767 | **Fuel Grommet** - NEW<br>For Red Max, Ryobi, Homelite, & Kawasaki<br>2 inlet | |
| **07-148** | Stihl 0000-930-2803<br>Stihl 0000-989-0516<br>Stihl 00009375004 | **Grommet with Hose** - NEW<br>Fits Stihl FS350, FS400, FS450, & FS480 | |

## Oil Seals

| | | | |
|---|---|---|---|
| **36-414** | Kohler 25 032 06-S | **Oil Seal** - NEW<br>Fits Kohler CH18, CH20, CH22, CH23, CH25, CH620, & CH640 | |

F

| OREGON | Replaces | Description | Product Code |
|---|---|---|---|
| **86-019** | Bunton<br>Exmark<br>Encore | **Commercial Walk-Behind**<br>Bag only, frame not included | |
| **86-033** | Exmark #103-0431 | **Bag for Rider**<br>Fits Lazer Z and Lazer HP | |
| **86-036** | Honda 81310-758-S00 | **Rear Bag**<br>For Honda Harmony rear bag | |
| **86-002** | Honda 81320-VG0-013 | **Grass Bag -** NEW<br>Fits Honda HRC216 & HRC215<br>Frame and Hardware not included | |
| **86-009** | Lawn Boy 679966 | **Heavy-Duty Side Bag**<br>For side bagger | |
| **86-001** | Lawn Boy 679966 | **Medium-Duty Side Bag**<br>For side bagger | |
| **86-037** | Lawn Boy 684333 | **Commercial Side Bag**<br>For side discharge with plastic frame<br>11.3 oz. | |
| **86-025** | MTD 764-0221 | **Rear Bag**<br>Fits twin bag catchers on 500 series rear engine riders and 400 & 600 series front engine tractors | |

# Grass Bags

| OREGON | Replaces | Description | Product Code |
|---|---|---|---|
| **86-010** | Snapper 1-2321 | **Rear Bag**<br>For commercial 21" mowers, 21 CV series cast aluminum deck, 8" longer than 86-004 | |
| **86-005** | Snapper 5-0711 | **Bag Slide**<br>Use with Oregon® 86-004 & 86-010 | |
| **86-008** | Snapper 1-8177<br>Snapper 1-9251<br>Yazoo 200-013 | **Rear Bag**<br>For rear bag riding mowers<br>For single bag riders | |
| **86-029** | Snapper 1-9250 | **Rear Bag**<br>For rear engine riders with twin bag systems | |

G

| OREGON | Replaces | Description | Product Code |
|---|---|---|---|
| **59-200** | Stihl 4228-710-6050A | **Hedge Trimmer Blade Set**<br>Fits HS45 18" trimmers | |

| | | | |
|---|---|---|---|
| **59-201** | Stihl 4228-710-6051A | **Hedge Trimmer Blade Set**<br>Fits HS45 24" trimmers | |

| | | | |
|---|---|---|---|
| **59-202** | Stihl 4237-710-6051 | **Hedge Trimmer Blade Set**<br>Fits HS81T 24" "T" model Stihl trimmers<br>Perfect for trimming and sculpting | |

| | | | |
|---|---|---|---|
| **59-203** | Stihl 4237-710-6052 | **Hedge Trimmer Blade Set**<br>Fits HS81T 30" "T" model Stihl trimmers<br>Perfect for trimming and sculpting | |

# Ignition Parts

| OREGON | Replaces | Description | Product Code | |
|---|---|---|---|---|

## Ignition Coils

| | | | |
|---|---|---|---|
| **33-362** | Briggs & Stratton 298502<br>John Deere AM30950 | **Ignition Coil**<br>For 2, 3, 3.5, & 4 HP engines, points ignition<br>Fits 80000, 92000, & 110000 series<br>Use Oregon® 33-342 for electronic ignition | |
| **33-365** | Briggs & Stratton 298968<br>Briggs & Stratton 299366<br>John Deere AM35759 | **Ignition Coil**<br>For 7, 8, 10, & 11 HP engines, points ignition<br>Fits 170000, 190000, 220000, & 252000 series<br>Use Oregon 33-344 for electronic ignition | |
| **33-340** | Briggs & Stratton 697037<br>Briggs & Stratton 397358<br>Briggs & Stratton 395491<br>Briggs & Stratton 395490<br>Briggs & Stratton 298316<br>John Deere PT10998 | **Ignition Coil**<br>For 5 HP engines with electronic ignition<br>Fits models 130200 thru 132200 horizontal &<br>130900 thru 132900 vertical | |
| **33-341** | Briggs & Stratton 802574<br>Briggs & Stratton 799381<br>Briggs & Stratton 790717<br>Briggs & Stratton 692605<br>Briggs & Stratton 590454<br>Briggs & Stratton 493237<br>Briggs & Stratton 491760 | **Ignition Coil**<br>For 5 HP Quantum and Europa<br>engines with electronic ignition | |
| **33-342** | Briggs & Stratton 793281<br>Briggs & Stratton 697036<br>Briggs & Stratton 398593<br>Briggs & Stratton 496914<br>John Deere PT11047 | **Ignition Coil**<br>For 2-4 HP engines with electronic ignition<br>Electronic version of Oregon 33-362 | |
| **33-344** | Briggs & Stratton 398811<br>Briggs & Stratton 395492<br>Briggs & Stratton 398265<br>John Deere PT 15339 | **Ignition Coil**<br>For 7-12 HP engines with electronic ignition<br>Electronic version of Oregon 33-365 | |
| **33-347** | Briggs & Stratton 798853<br>Briggs & Stratton 715231<br>Briggs & Stratton 690248<br>Briggs & Stratton 591459<br>Briggs & Stratton 495859<br>Briggs & Stratton 492341<br>Briggs & Stratton 491312<br>Briggs & Stratton 490586 | **Ignition Coil**<br>For 10-13 HP L-Head and Vanguard<br>9 HP, 12.5 HP, & 14 HP engines | |
| **33-345** | Briggs & Stratton 394988<br>Briggs & Stratton 394895<br>Briggs & Stratton 394891<br>Briggs & Stratton 392329 | **Ignition Coil**<br>For 16–18 HP & twin-cylinder L-Head engines with<br>electronic ignitions<br>Fits models 400400 thru 422700 | |
| **33-352-0** | Briggs & Stratton 691060 | **Ignition Coil**<br>For Intek V-Twin engines | |

I

| OREGON | Replaces | Description | Product Code |
|---|---|---|---|

## Ignition Coils

| | | | |
|---|---|---|---|
| **33-353** | Briggs & Stratton 695711 | **Ignition Coil**<br>For 11 & 12 CID Intek engines | |
| **33-348** | Honda 30500-ZE1-063<br>Honda 30500-ZE1-053<br>Honda 30500-ZE1-043<br>Honda 30500-ZE1-033<br>Honda 30500-ZE1-023<br>Code: 4589693 | **Ignition Coil**<br>Fits model GX110, GX120, GX140, & GX160<br>Solid state module | |
| **33-521** | Honda 30500-ZF6-W02<br>Honda 30500-ZE2-023<br>Code: 7032428 | **Ignition Coil**<br>Fits most GX240, GX270, GX340, &<br>GX390 series engines<br>Includes spark plug connector | |
| **33-520** | Honda 30500-ZE7-043<br>Honda 30500-ZE7-033<br>Code: 7199227<br>Honda 30500-ZE7-063 | **Ignition Coil**<br>Fits most GXV160 series engines | |
| **33-522** | Honda 30500-ZG9-M02<br>Code: 4581476 | **Ignition Coil**<br>Fits most GXV120 series engines | |
| **33-151** | Honda 30500-ZL8-004 | **Ignition Coil**<br>Fits models FG400, FG500, GC135,<br>GC160, GCV135, & GCV160 | |
| **33-254** | Husqvarna 544018401<br>Husqvarna 503901401 | **Ignition Coil**<br>Fits saw models 51, 55, & 55 Rancher (2000–2007) | |
| **33-518** | Kohler 24-584-15-S<br>Kohler 24-584-036-S<br>Kohler 24 584 11-S<br>Kohler 24 584 11<br>Kohler 24 584 03<br>Kohler 24 757 23 | **Ignition Coil**<br>Fits Command models CH20 thru CH25,<br>CV22 thru CV25, & CH 730 & CH 740 model engines with<br>Spark Advance Module (SAM) | |
| **33-519** | Kohler 52-584-02-S | **Ignition Coil**<br>Fits models M18 thru M20<br>For 18HP & 20HP model engines | |

# Ignition Parts

| OREGON | Replaces | Description | Product Code | |
|---|---|---|---|---|

## Ignition Coils

| | | | |
|---|---|---|---|
| **33-333** | Kohler 231281<br>Kohler 231281S<br>Kohler 41 519 21-S<br>Tecumseh 32080<br>John Deere AM38411 | **Ignition Coil**<br>For 6-16 HP engines<br>Fits K141, K161, K181, K241, K301, K321, & K341 series, single-cylinder engine with battery ignition | |
| **33-525** | Robin EY-20 | **Ignition Coil**<br>Fits EY-20 model engines | |
| **33-244** | Stihl 0000-400-1300 | **Ignition Coil**<br>Fits chainsaw models 024, 026, 028, 034, 036, 044, 046, & 048, trimmer models FS360 & FS420 | |
| **33-243** | Stihl 0000-400-1306<br>Stihl 0000-400-1302 | **Ignition Coil**<br>Fits chainsaw models 021, 023, & 025, trimmer models FS 160, FS 180, & FS 220 | |
| **33-245** | Stihl 1122-400-1314 | **Ignition Coil**<br>Fits chainsaw models 046, 066, MS460, MS650, & MS660 | |
| **33-346** | Tecumseh 34443A<br>Tecumseh 34443<br>Tecumseh 34443B<br>Tecumseh 34443C<br>Tecumseh 34443D | **Ignition Coil**<br>Fits models H30, H35, H40, H50, H60, H70, HH50, HH60, HH70, HS40, HS50, HSK40, HSK60, HSK600, HSK635, HSK70, HSK840, HSK845, HSK850, HSK870, HSSK40, HSSK50, HSSK55, HXL35, LAV35, LAV40, LAV50, LEV100, LEV105, LEV115, LEV120, LEV80, LEV90, LH195, HXL840, LV148, LV156, LV195, OH195, OHH60, OVRM105, OVRM120, OVRM50, OVER55, OHH45, OHH50, OHH55, OHH60, OHH65, OHSK50, OHSK55, OHSK60, OHSK65, OHSK70, OV195, OVRM60, OVRM65, TVM125, TVM140, TVS100, TVS105, TVS115, TVS120, TVS600, TVS75, TVS840, TVS90, V70, VH50, VH70, VLV126, VLV40, VLV50, VLV55, VLV60, VLV65 VLXL50, VLXL55, VSK90, & VSK100 | |

I

| OREGON | Replaces | Description | Product Code |
|---|---|---|---|

## Ignition Coils

| | | | |
|---|---|---|---|
| **33-343** | Tecumseh 35135A<br>Tecumseh 35135<br>Tecumseh 35135B | **Ignition Coil**<br>Fits TVM, TVXL, 170-220, OVXL120,<br>HM70 thru HM100, & OHM-OHSK120<br>For 7 HP thru 12 HP, medium frame engines | |
| **33-363** | Tecumseh 30560A | **Ignition Coil**<br>For 3-10 HP engines<br>Fits LAV, V, H, HS, VM series, & most point ignition engines | |
| **33-150** | Tecumseh 37137<br>Tecumseh 36344<br>Tecumseh 36344A | **Ignition Coil**<br>Fits models OHV 110, OHV125, OHV130, OHV135,<br>OHV140, OHV150, OHV165, OHV170, OHV175, & OHV180 | |

## Spark Plug Boots/Terminal

| | | | |
|---|---|---|---|
| **33-213** | Husqvarna 501 485 402 | **Spark Plug Boot**<br>45° angle<br>Fits brushcutter models 232, 235, 322, & 325 | |
| **33-204** | Husqvarna 501-485-402 | **Spark Plug Boot**<br>Fits chainsaw models 340, 345, 346, 350, & 351<br>Protects plug from moisture, 90 degrees,<br>eliminates shock, positive connection | |
| **33-200** | NGK VBOF 8032 45 | **Spark Plug Boot**<br>45° angle<br>For overhead valve engines | |
| **33-208** | Homelite A55373-A | **Spark Plug Boot with Spring**<br>5 mm for trimmers & chainsaws | |
| **33-215** | Honda 30700-ZE1-000<br>Honda 30700-ZE1-013 | **Spark Plug Boot**<br>Fits GX11–GX390 | |
| **33-216** | Honda 30700-ZJ1-841<br>Honda 30700-ZJ1-003 | **Spark Plug Boot**<br>Fits GX120, GX610, GX620, GX670, GXV610, & GXV620 | |

# Ignition Parts

| OREGON | Replaces | Description | Product Code | |
|---|---|---|---|---|

## Spark Plug Boots/Terminal

| | | | |
|---|---|---|---|
| **33-516** | Kawasaki 21130-0256<br>Shindaiwa 22102-72220<br>Kawasaki 20010-72221<br>Mitsubishi TR64961 | **Spark Plug Boot with Spring**<br>Fits Kawasaki TD26, TD40, TD43, & TD48,<br>Shindaiwa T25, T27, & C35,<br>Mitsubishi TL26, TL33, TL43, & T200 | |
| **36-425** | Echo 159012-03433 | **Spark Plug Boot** - NEW<br>Fits Echo CS302, CS4600, PB230, PB250, PB500, SRM230, SRM260, SRM280, SRM310, SRM2000, SRM2500, SRM3000, & SRM4600<br>Size: 5.0mm<br>Angle: 90 | |
| **36-423** | Echo A27000013 | **Spark Plug Boot** - NEW<br>Fits Echo PB265L & PPT265S<br>Size: 7.0mm<br>Angle: 45 | |
| **36-424** | Echo 159012-01620 | **Spark Plug Boot** - NEW<br>Fits Echo CS280, CS300, CS3000, PB200, PB400, PB1000, PB2400, SRM200, SRM340, SRM1500, SRM2100, SRM2400, & SRM3100<br>Size 5.0mm<br>Angle: 90 | |
| **36-427** | Makita 957-604-240 | **Spark Plug Boot** - NEW<br>Fits Makita DPC6200, DPC6201, DPC6400, DPC6401, DPC6410, DPC6411, DPC7001, DPC7300, DPC7301, DPC7310, DPC7311, DPC7321, DPC8112, DPC9500, DPC9501, DCS6401, DCS642120, DCS7301, & DCS7901<br>Size: 5.0mm<br>Angle: 90 | |
| **36-428** | Red Max 505 29 88-01 | **Spark Plug Boot** - NEW<br>Fits Red Max 143RII, 226R, 226RJ, 236R, & 532RBS brush cutter<br>Size: 7.0mm<br>Angle: 90 | |
| **36-422** | Stihl 4128-405-1000 | **Spark Plug Boot** - NEW<br>Fits Stihl FS350, 400, 450, & 480<br>Size: 5.0mm<br>Angle: 45 | |
| **33-210** | | **Spark Plug Boot**<br>Fits most spark plugs<br>Protects plug from moisture<br>Eliminates shock<br>Positive connection | |

I

| OREGON | Replaces | Description | Product Code |
|---|---|---|---|

## Points & Condenser

| | | | |
|---|---|---|---|
| **33-601** | Briggs & Stratton 298185 | **Points**<br>Fits 9, 10, 13, 15, & 16 HP horizontal engines 19D, 23D, 233400, 243400, 300400, 320400, 325400, & 326400 series | |
| **33-182-0** | Briggs & Stratton 294628 | **Ignition Kit**<br>Fits 2-8 HP horizontal & vertical engines in the 60000 to 190000 series<br>Most popular kit for engines (1962–1983) | |
| **33-628** | Kohler 47-150-03<br>Kohler 47-150-01<br>Kohler 220980 | **Points**<br>Fits models K91, 141, 161, 181, 241, 301, 321 341, 361, KT17, KT21, K482, K532, & K582 series<br>Bracket is not included | |
| **33-016** | Kohler 230722 | **Condenser**<br>Fits 8 HP and larger on all engines with battery coil ignition | |
| **33-606** | Tecumseh 30547A<br>John Deere AM30947<br>Phelon 06230 | **Points**<br>Fits 3-10 HP engines LAV, H, HS, V, VH, & VM series<br>Use with Oregon® 33-008 condenser | |
| **33-008** | Tecumseh 30548B<br>Clinton 135-24<br>John Deere AM30949<br>Phelon 071130 | **Condenser**<br>Fits 3-10 HP engines LAV, H, HS, V, & VH series<br>Use with Oregon part 33-606 points | |
| **33-186** | Tecumseh 730600<br>Tecumseh 740037A | **Ignition Kit**<br>Fits 3-10 HP engines LAV, H, HS, V, VH, & VM series<br>Contains 1 each of Oregon 33-606 & 33-008 | |

## Ignition Module

| | | | |
|---|---|---|---|
| **33-053** | Universal | **Ignition Module**<br>For most 2-cycle & 4-cycle engines from 21 cc & up (except those with alternator flywheels) & most mower engines<br>Use separate modules for each cylinder in multi-cylinder applications<br>Low RPM operating ability for fast, easy starts with electronic dependability<br>**(Not for battery ignition systems)** | |

# Ignition Parts

## Flywheel Keys

| OREGON | Replaces | Description | Product Code | |
|---|---|---|---|---|
| 02-402 | Briggs & Stratton 61760 | **Zinc Flywheel Key**<br>For engines with point ignitions | | |
| 02-407 | Briggs & Stratton 222698<br>Briggs & Stratton 222698S<br>John Deere PT7211 | **Aluminum Flywheel Key**<br>For engines with electronic ignitions | | |
| 02-401 | Lawn Boy 607199<br>John Deere 26H10 | **Flywheel Key**<br>5/32" x 5/8"<br>Indent in side holds flywheel key in place on crankshaft<br>For all Lawn Boy 2-cycle lawnmower engines | | |
| 02-404 | Tecumseh 610961<br>Tecumseh 27247<br>John Deere M81575 | **Flywheel Key**<br>For point ignitions on older 3 & 3.5 HP engines | | 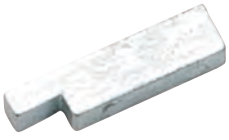 |
| 02-406 | Tecumseh 610995 | **Flywheel Key**<br>For point ignitions on newer 3 & 3.5 HP engines<br>with external coil<br>Silver key | | 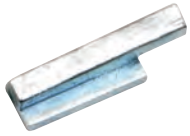 |
| 02-403 | Tecumseh 611004 | **Flywheel Key**<br>For engines with solid state ignition<br>Fits models TVX, TNT, ECV, H30-70, AH600,<br>HSK600, HXL840, SHK840, SHK845, & SHK850<br>Offset key | | |
| 02-405 | Tecumseh 611154 | **Flywheel Key**<br>For Vector series engines | | |

I


Can't find what you're looking for?
Try us online to search the latest products available.

OregonProducts.com

| OREGON | Replaces | Description | Product Code |
|---|---|---|---|

## The Three-Point Hitch System

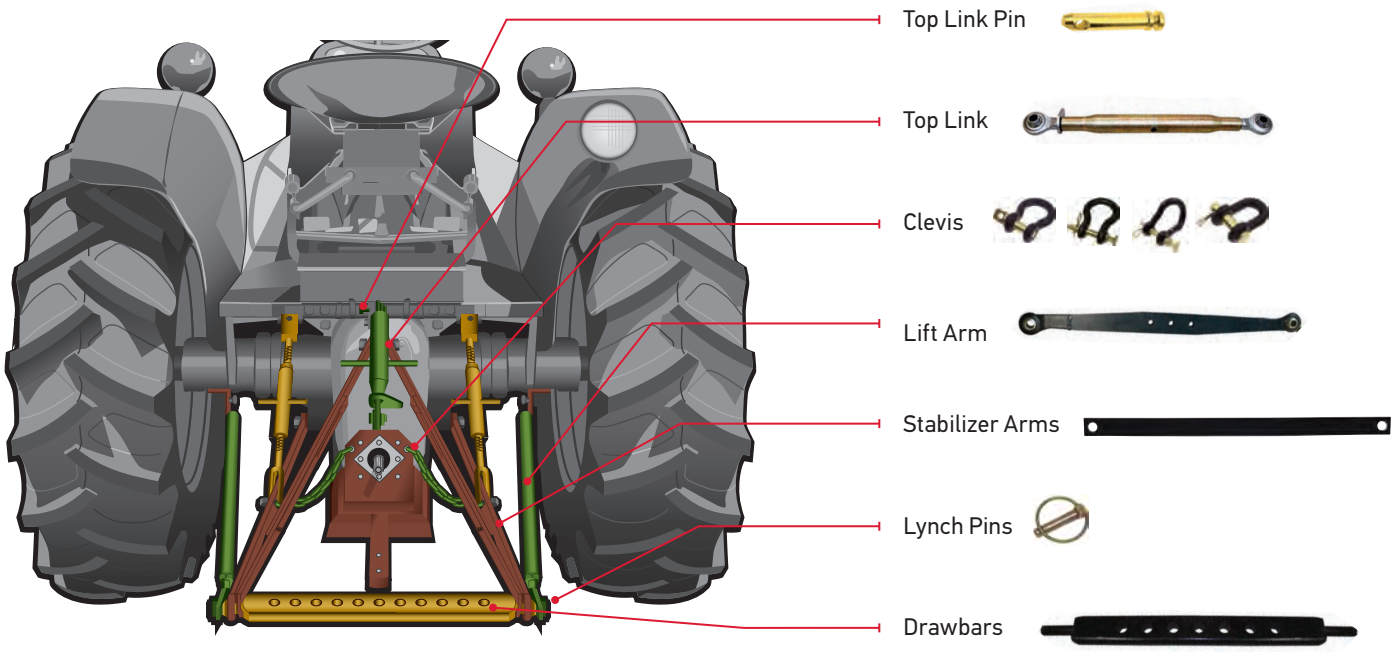


### Introduction

A typical tractor three-point hitch system is standard on almost all farm tractors today. The basic function of the system is the attachment and adjustment of agricultural implements. The three primary parts of the system are the top link and two lower lift arms as shown in gold and brown in the illustration above. Special pins are used to fasten the implement at these three points: top link pins and draw pins (lift arm pins). Adjustment of one or all of these components allows the tractor operator to raise, lower or tilt an implement. The three-point linkage parts described in this catalog are built to standard specifications set by the American Society of Argicultural Engineers (ASAE) described in the table on the right.

### Category 1, 2, 3, and 4

Categories are used to classify tractors by drawbar horsepower. The table below gives the dimensions and the horsepower ratings that are associated with these three categories.

| Maximum Drawbar Horsepower | Top Link Pin Dia. | Pull/Draw Pin Dia. | Stanard Lift Arm Spacing |
|---|---|---|---|
| Cat. 0 - up to 20 | 5/8" | 5/8" | 20" |
| Cat. 1- up to 45 | 3/4" | 7/8" | 26" |
| Cat. 2- 40 to 100 | 1" | 1–1/8" | 32" |
| Cat. 3- 80 to 225 | 1–1/4" | 1–7/16" | 38" |
| Cat. 4- 135 to 300 | 1–3/4" | 2" | 46" |

### Top Link Connection

Top link pins are always unthreaded and are held in place by either a lynch pin, or in some cases, a large “R” clip pin. See below. Top links and top link pins vary in length, but their respective ball socket holes and pin diameters are standardized by horsepower category.

### Top Link Connection

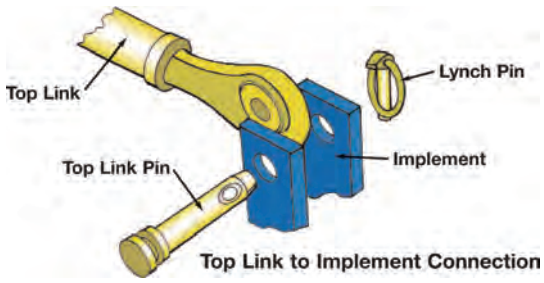

Top Link to Implement Connection

### Lift Arm Connection

Most lift arm pins are threaded on the end that bolts to the implement bracket. The unthreaded end with the cross hole accommodates the ball socket of the lift arm. The lift arm is secured on the pin with a lynch pin or large “R” clip pin. See below. Lift arms and lift arm pins vary in length, but their respective ball socket holes and pin diameters are standardized by horsepower category.

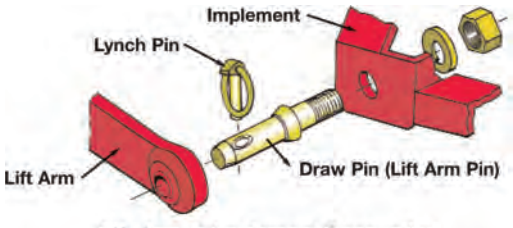

Lift Arm to Implement Connection

## Clevises

| OREGON | Description | Body Dia. | Clevis Opening | Usable Length | Pin Dia. | Working Load (lbs.) | Product Code |
|---|---|---|---|---|---|---|---|
| **Farm** | | | | | | | |
| 03-128 | 1/2" Farm | 1/2" | 13/16" | 1–15/16" | 5/8" | 6,500 | |
| 03-129 | 3/8" Farm | 3/8" | 23/32" | 1–7/16" | 7/16" | 3,000 | |
| 03-135 | 3/4" Farm | 3/4" | 1–1/4" | 3" | 7/8" | 13,000 | |
| 03-136 | 7/16" Farm | 7/16" | 3/4" | 1–11/16" | 1/2" | 4,000 | |
| 03-156 | 7/8" Farm | 7/8" | 1–7/16" | 3–1/4" | 1" | 15,000 | |
| **Straight** | | | | | | | |
| 03-141 | 3/4 x 3–3/4" Straight | 3/4" | 1–5/16" | 3–3/4" | 5/8" | 12,000 | |
| 03-145 | 7/8 x 4–1/4" Straight | 7/8" | 1–5/16" | 4–1/4" | 3/4" | 16,000 | |
| **Twisted** | | | | | | | |
| 03-148 | 3/4 x 3–1/2" Twsted | 3/4" | 1–5/16" | 3–1/2" | 5/8" | 12,000 | |
| 03-150 | 7/8 x 3–7/8" Twisted | 7/8" | 1–5/16" | 3–7/8" | 3/4" | 16,000 | |
| **Utility** | | | | | | | |
| 03-133 | 5/16" Utility | 5/16" | 17/32" | 1" | 3/8" | 1,500 | |
| 03-154 | 1/2" Utility | 1/2" | 13/16" | 1–11/16" | 5/8" | 6,000 | |

## Drawbars

One 3-point hitch cross drawbars to fit Category 0 through Category 3 tractors.

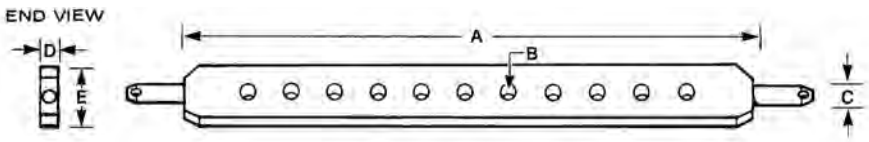

**A** = Lift Arm Spacing **B** = Hole Diameter **C** = Pin Diameter
**D** = Thickness **E** = Width

| OREGON | Cat. | No. Holes | A | B | C | D | E | Color | Weight (lbs.) | Product Code |
|---|---|---|---|---|---|---|---|---|---|---|
| 03-147 | 1 | 11 | 26" | 3/4" | 7/8" | 1" | 2–1/2" | Black | 16.4 | |
| 03-151 | 0/1 | 7 | 20" | 3/4" | 7/8" | 1" | 2–1/2" | Black | 13.5 | |
| 03-157 | 2 | 13 | 32" | 3/4" | 1–1/8" | 1–1/4" | 3" | Black | 33.0 | |

## Stabilizer Arms

Stabilizer arms increase the stability of the tractor lift arms.

| OREGON | Description | Weight (lbs.) | Product Code |
|---|---|---|---|
| 03-155 | Right or left universal stabilizer arm; 7/8" pin holes on 31–9/16" centers. | 6.0 | |

## Top Links

Quality forged top links available in Category 0, 1, 1 & 2 combination, 2, and 3 sizes.
All top links are yellow zinc plated unless otherwise specified. The ends are clear zinc plated.

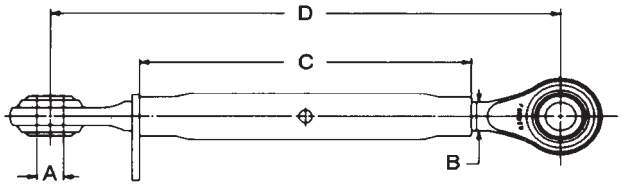

**A** = Pin Hole Size **B** = Threads **C** = Body Length

| OREGON | Category | A | B | C | Closed Length | Open Length | Color | Weight (lbs.) | Product Code |
|---|---|---|---|---|---|---|---|---|---|
| 03-143 | 1 | 3/4" | 1–1/8" NC | 16" | 21" | 31" | Plated | 7.6 | |
| 03-146 | 2 | 1" | 1–1/8" NC | 16" | 21" | 31" | Plated | 10 | |

## Top Link Pins

Sizes and styles for Category 1 through 2 tractors. Yellow zinc dichromate plated.

| OREGON | Cat. | Description | Pin Dia. | Usable Length | Overall Length | Weight (lbs.) | Product Code |
|---|---|---|---|---|---|---|---|
| 03-120 | 1 | Long top link pin; replaces Ferguson 195589M1, AC339942 | 3/4" | 3–7/8" | 5–1/2" | 0.6 | |
| 03-127 | 1 | Replaces Ford 9N-560, Ferguson 195647M1 | 3/4" | 2–3/4" | 4–1/2" | 0.5 | |
| 03-137 | 2 | Replaces Ford C5NN486A | 1" | 4–3/8" | 6" | 1.3 | |
| 03-142 | 1 | Extra-long top link pin; replaces Ford E381T9 | 3/4" | 4–3/4" | 6–3/8" | 0.8 | |

## Lift Arm

| OREGON | Description | Weight (lbs.) | Product Code |
|---|---|---|---|
| 03-153 | Category 1 right or left-hand forged lift arm; fits all Ferguson models, Ford 2N, 8N, 9N, and NAA, Massey-Ferguson 35, 50, Oliver 550 and Oliver 3-point conversion, John Deere 1010; 7/8" pin holes; 31–3/4" ball centers; 34–1/2" overall length. | 11.7 | |

## Lynch Pins

| OREGON | Description | Pin Dia. | Usable Length | Shank Length | Overall Length | Weight (lbs.) | Product Code |
|---|---|---|---|---|---|---|---|
| 03-101 | Standard | 7/16" | 1–1/4" | 1–3/4" | 2" | 0.10 | |
| 03-103 | Standard | 1/4" | 1–1/4" | 1–3/4" | 2–1/8" | 0.07 | |
| 03-104 | Heavy-duty; fits cat. 1, 2, and 3 pins | 7/16" | 1–1/2" | 1–3/4" | 2–1/8" | 0.13 | |
| 03-105 | Standard | 3/16" | 1" | 1–3/8" | 1–5/8" | 0.03 | |
| 03-111 | Standard | 5/16" | 1–1/4" | 1–3/4" | 2–1/8" | 0.10 | |
| 03-115 | Long; fits cat. 1, 2, and 3 pins | 7/16" | 1–3/4" | 2" | 2–5/16" | 0.14 | |
| 03-124 | P791 with chain and cotter pin | 7/16" | 1–1/4" | 1–3/4" | 2" | 0.20 | |

## Locking Pins

Numerous farm, lawn and garden, and industrial applications. Square and round loop style locking pins. Yellow zinc dichromate plated.

| OREGON | Dia. | Usable Length | Loop style | Weight (lbs.) | Product Code |
|---|---|---|---|---|---|
| 03-109 | 5/16" | 2–1/4" | Round | 0.10 | |
| 03-116 | 5/16" | 2–1/4" | Square | 0.10 | |
| 03-126 | 1/4" | 1–3/4" | Round | 0.06 | |

Round Loop

Square Loop

## R Clip Pins

Available in the most popular sizes for farm and other applications. Yellow zinc dichromate plated spring wire.

| OREGON | Wire Dia. | Overall Length | Fits Pin Dia. | Weight (lbs.) | Product Code |
|---|---|---|---|---|---|
| 03-102 | 5/32" | 2–15/16" | 5/8" to 1" | 0.04 | |
| 03-106 | 3/16" | 3–3/4" | 7/8" to 1–1/4" | 0.08 | |
| 03-108 | 1/8" | 1–15/16" | 1/2" to 3/4" | 0.02 | |
| 03-110 | 3/32" | 1–5/8" | 1/4" to 1/2" | 0.01 | |
| 03-152 | 5/16" | 4–1/8" | 1" to 1–7/16" | 0.20 | |

## Draw Pins

Forged and adjustable Category 1 through 2 draw pins for a variety of applications. All pins are yellow zinc dichromate plated.

03-107

03-132

03-138

| OREGON | Cat. | Description | Pin Dia. | Usable Length | Overall Length | Thread Dia. | Thread Length | Weight (lbs.) | Product Code |
|---|---|---|---|---|---|---|---|---|---|
| 03-107 | 1 | Forged; universal | 7/8" | 1–3/4" | 5–1/2" | 7/8" NF | 1–5/8" | 1.1 | |
| 03-132 | 1 | Forged; extra long | 7/8" | 2–1/4" | 6–1/2" | 7/8" NF | 2–1/4" | 1.3 | |
| 03-138 | 1 to 2 | Forged; to work cat. 1 implements on cat. 2 tractor | 1–1/8" | 1–13/16" | 5–1/4" | 7/8" NF | 1–5/8" | 1.5 | |

## Hitch Pins

Forged head hitch pin with swivel handle and zinc plated "R" clip pin. More than 25% stronger than Grade 2. Yellow zinc dichromate plated.

| OREGON | Pin Dia. | Usable Length | Overall Length | Weight (lbs.) | Product Code |
|---|---|---|---|---|---|
| 03-114 | 3/4" | 6–1/4" | 7–3/4" | 1.1 | |
| 03-117 | 3/4" | 4–1/4" | 5–3/4" | 0.9 | |
| 03-118 | 5/8" | 4–1/4" | 5–3/4" | 0.6 | |
| 03-122 | 5/8" | 6–1/4" | 7–3/4" | 0.8 | |
| 03-125 | 1" | 6–1/4" | 7–3/4" | 1.9 | |
| 03-131 | 7/8" | 6–1/4" | 7–3/4" | 1.4 | |
| 03-140 | 7/8" | 4–1/4" | 5–3/4" | 1.2 | |
| 03-149 | 1" | 4–1/4" | 5–3/4" | 1.5 | |

# Linkage, Jacks, & Hardware

## Hitch Pins - Bent

These pins have numerous farm, lawn and garden, and industrial applications. Complete with zinc plated “R” Clip pin. Yellow zinc dichromate plated.

| OREGON | Pin Dia. | Usable Length | Weight (lbs.) | Product Code |
|---|---|---|---|---|
| 03-112 | 1/2" | 3" | 0.34 | |
| 03-113 | 5/8" | 3" | 0.50 | |

## Hitch Pins - Red Head

Designed for today’s demanding applications, these one piece, grade 5 performance, forged hitch pins are made from high strength steel and heat treated. Pin has black powder coating with a red vinyl coated head and handle. Zinc plated “R”clip pin included.

| OREGON | Pin Dia. | Usable Length | Overall Length | Weight (lbs.) | Product Code |
|---|---|---|---|---|---|
| 03-100 | 3/4" | 6–1/2" | 9–1/2" | 1.5 | |
| 03-119 | 7/8" | 6–1/2" | 9–1/2" | 1.9 | |
| 03-121 | 1/2" | 3–5/8" | 6–5/8" | 0.7 | |
| 03-123 | 1" | 7–1/2" | 10" | 2.6 | |
| 03-130 | 5/8" | 5–3/4" | 9" | 1.1 | |
| 03-134 | 3/4" | 4" | 7" | 1.1 | |
| 03-139 | 1–1/8" | 8–1/2" | 11–1/2" | 3.3 | |
| 03-144 | 5/8" | 4" | 7" | 0.9 | |

## Jacks - Topwind

Oregon® jacks include the most popular styles and sizes. The jacks have lift capacities from 2000 lbs. to 5000 lbs. Precision-engineered with smooth turning handle, dependable inner screw and rugged foot plate. Available in several topwind and sidewind styles, with lift heights of 10" & 15".

**03-500** **Topwind Jack, Tubular**
Tubular mount, topwind style jack
10" lift height, 2000 lbs. lift capacity, 14.1 lbs.

**03-501** **Topwind Jack, Tubular**
Tubular mount, topwind style jack
10" lift height, 5000 lbs. lift capacity, 14.1 lbs.

OREGON | Description | Product Code

## Jacks - Topwind

**03-503** **Topwind Jack, A–Frame**
A-frame mount, topwind style jack
15" lift height, 5000 lbs. lift capacity, 13.7 lbs.

**03-504** **Topwind Jack, Tubular**
Tubular mount, topwind style jack
15" lift height, 5000 lbs. lift capacity, 19.8 lbs.

**03-506** **Topwind Jack, Flange**
Flange (weld) mount, topwind style jack
10" lift height, 5000 lbs. lift capacity, 16.4 lbs.

## Jacks - Sidewind

**03-502** **Sidewind Jack, Tubular**
Tubular mount, sidewind style jack
15" lift height, 5000 lbs. lift capacity, 19.8 lbs.

L

OREGON | Description | Product Code

## Jacks - Sidewind

**03-507** **Sidewind Jack, Tubular**
Tubular mount, sidewind style jack
10" lift height, 5000 lbs. lift capacity, 16.9 lbs.

**03-508** **Sidewind Jack, Flange**
Flange (weld) mount, sidewind style jack
10" lift height, 2000 lbs. lift capacity, 16.9 lbs.

**03-505** **Sidewind Jack, Flange, Wheeled**
Flange (weld) mount, sidewind style jack, wheeled
10" lift height, 1000 lbs. lift capacity

## Display Packs

### Clevis Pins

| OREGON | Description | Qty. | Bagged | Clamshell | Product Code |
|---|---|---|---|---|---|
| 03-320 | **Clevis Pins, Assortment Kit** | **50** | | ✓ | |
| | 1/4" X 1–1/2" Clevis Pin | 4 | | | |
| | 1/4" X 2–1/4" Clevis Pin | 4 | | | |
| | 1/4" X 1–1/4" Clevis Pin | 4 | | | |
| | 1/4" X 1–5/8" Clevis Pin | 4 | | | |
| | 1/4" X 1–3/4" Clevis Pin | 4 | | | |
| | 1/4" X 1–7/8" Clevis Pin | 4 | | | |
| | 1/4" X 2" Clevis Pin | 4 | | | |
| | 1/4" X 2–1/2" Clevis Pin | 4 | | | |
| | 5/16" X 1–5/8" Clevis Pin | 1 | | | |
| | 5/16" X 1–3/4" Clevis Pin | 2 | | | |
| | 5/16" X 1–7/8" Clevis Pin | 2 | | | |
| | 5/16" X 2" Clevis Pin | 2 | | | |
| | 5/16" X 2–1/4" Clevis Pin | 2 | | | |
| | 5/16" X 2–1/2" Clevis Pin | 1 | | | |
| | 5/16" X 2–5/8" Clevis Pin | 1 | | | |
| | 5/16" X 2–3/4" Clevis Pin | 2 | | | |
| | 5/16" X 2–7/8" Clevis Pin | 1 | | | |
| | 5/16" X 3" Clevis Pin | 1 | | | |
| | 3/8" X 1–7/8" Clevis Pin | 1 | | | |
| | 3/8" X 2" Clevis Pin | 1 | | | |
| | 3/8" X 2–1/4" Clevis Pin | 1 | | | |

Clevis Pins

### Cotter Pins

| | | | | | |
|---|---|---|---|---|---|
| 03-301 | **Cotter Pins, Assortment Kit** | **420** | | ✓ | |
| | 1/16" x 1" Straight Cotter Pin | 100 | | | |
| | 3/32" x 1" Straight Cotter Pin | 100 | | | |
| | 1/8" x 1" Straight Cotter Pin | 100 | | | |
| | 1/8" x 1–1/2" Straight Cotter Pin | 60 | | | |
| | 5/32" x 1–1/2" Straight Cotter Pin | 40 | | | |
| | 3/16" x 2" Straight Cotter Pin | 20 | | | |
| 03-305 | **Straight Cotter Pins, Assortment Kit** | **26** | ✓ | | |
| | 1/16" X 5/8" Straight Cotter Pin | 2 | | | |
| | 3/32" X 1–1/2" Straight Cotter Pin | 2 | | | |
| | 1/8" X 1" Straight Cotter Pin | 2 | | | |
| | 1/8" X 1–1/2" Straight Cotter Pin | 2 | | | |
| | 5/32" X 1" Straight Cotter Pin | 2 | | | |
| | 5/32" X 2" Straight Cotter Pin | 2 | | | |
| | 3/16" X 1" Straight Cotter Pin | 2 | | | |
| | 3/16" X 2" Straight Cotter Pin | 2 | | | |
| | 1/4" X 1–1/4" Straight Cotter Pin | 2 | | | |
| | 1/4" X 1–1/2" Straight Cotter Pin | 2 | | | |
| | 1/4" X 2–1/2" Straight Cotter Pin | 2 | | | |
| | 5/16" X 2" Straight Cotter Pin | 2 | | | |
| | 3/8" X 2–1/2" Straight Cotter Pin | 2 | | | |

Cotter Pins

### E–Rings

| | | | | | |
|---|---|---|---|---|---|
| 03-312 | **E-ring Clips, Assortment Kit** | **90** | ✓ | | |
| | 1/16" E-Ring Clip | 10 | | | |
| | 1/8" E-Ring Clip | 20 | | | |
| | 3/16" E-Ring Clip | 10 | | | |
| | 1/4" E-Ring Clip | 20 | | | |
| | 3/8" E-Ring Clip | 10 | | | |
| | 1/2" E-Ring Clip | 10 | | | |
| | 5/8" E-Ring Clip | 5 | | | |
| | 3/4" E-Ring Clip | 5 | | | |

E-Rings

L

## Display Packs

### Grease Fittings

| OREGON | Description | Qty. | Bagged | Clamshell | Product Code |
|---|---|---|---|---|---|
| 03-321 | **Grease Fittings, Assortment Kit** | **8** | ✓ | | |
| | 1/4" - 28 Straight 45 Degree Grease Zerk | 2 | | | |
| | 1/4" - 28 Straight 90 Degree Grease Zerk | 2 | | | |
| | 1/4" - 28 Straight Grease Zerk | 4 | | | |

Grease Fittings

### Hair Pins

| | | | | | |
|---|---|---|---|---|---|
| 03-317 | **Hairpin Cotter Pins, 1/2" to 5/8"** | **2** | ✓ | | |
| 03-318 | **Hairpin Cotter Pins, 3/8" to 1/2"** | **2** | ✓ | | |
| 03-319 | **Hairpin Cotter Pin, 7/8" to 1–1/4"** | **1** | ✓ | | |
| 03-324 | **Hairpin Cotter Pins, 5/16" to 3/8"** | **5** | ✓ | | |
| 03-326 | **Hairpin Cotter Pins, 3/4" to 1"** | **2** | ✓ | | |
| 03-314 | **Hairpin Cotter Pins, 5/8" to 7/8"** | **2** | ✓ | | |
| 03-306 | **Hairpin Cotter Pins, Assortment Kit** | **130** | | ✓ | |
| | 0.04" Wire OD, 1/8–3/16" Pin | 20 | | | |
| | 0.058" Wire OD, 3/16–1/4" Pin | 20 | | | |
| | 1/16" Wire OD, 5/16–3/8" Pin | 20 | | | |
| | 3/32" Wire OD, 3/8–1/2" Pin | 20 | | | |
| | 1/8" Wire OD,1/2–5/8" Pin | 20 | | | |
| | 5/32" Wire OD, 5/8–7/8" Pin | 20 | | | |
| | 3/16" Wire OD, 7/8 - 1.25" Pin | 10 | | | |
| 03-322 | **Hairpin Cotter Pins, Assortment Kit** | **16** | ✓ | | |
| | 5/32" Wire OD, 5/8–7/8" Pin | 4 | | | |
| | 1/8" Wire OD, 1/2–5/8" Pin | 4 | | | |
| | 3/32" Wire OD, 3/8–1/2" Pin | 4 | | | |
| | 1/16" Wire OD, 5/16–3/8" Pin | 4 | | | |

Hair Pins

### Lock Pins

| | | | | | |
|---|---|---|---|---|---|
| 03-300 | **Lock Pin - Round, 5/16" x 1–3/4"** | **1** | ✓ | | |
| 03-304 | **Lock Pin - Round, 1/4" x 1–3/4"** | **1** | ✓ | | |
| 03-309 | **Lock Pin - Square, 1/4" x 2–1/2"** | **1** | ✓ | | |
| 03-316 | **Lock Pin - Square, 5/16" x 3–1/4"** | **1** | ✓ | | |
| 03-325 | **Lock Pins, Assortment Kit** | **3** | ✓ | | |
| | 1/4" X 1–3/4" Lock Pin - Round | 1 | | | |
| | 3/8" X 1–3/4" Lock Pin - Round | 1 | | | |
| | 5/16" X 1–3/4" Lock Pin - Round | 1 | | | |

Lock Pins

## Display Packs

| OREGON | Description | Qty. | Bagged | Clamshell | Product Code |
|---|---|---|---|---|---|
| **Machinery Key Assortment** | | | | | |
| 03-310 | **Machinery Keys, Assortment Kit** | **70** | | | |
| | 1/8" Sq. x 1–1/2" Square Key Stock | 20 | | | |
| | 3/16" Sq. x 1–1/2" Square Key Stock | 12 | | | |
| | 3/16" X 1/4" x 1–1/2" Key Stock | 12 | | ✓ | |
| | 1/4" Sq. x 1–1/2" Square Key Stock | 10 | | | |
| | 5/16" Sq. x 1–1/2" Square Key Stock | 8 | | | |
| | 3/8" Sq. x 1–1/2" Square Key Stock | 8 | | | |
| **Shaft Collars** | | | | | |
| 03-328 | **Shaft Collars, 1" ID** | **2** | ✓ | | |
| **Spring Pin Assortments** | | | | | |
| 03-307 | **Spring Pins, Assortment Kit** | **170** | | | |
| | 1/8" X 1" Spring Pin | 50 | | | |
| | 1/8" X 1–1/2" Spring Pin | 30 | | | |
| | 3/16" X 1" Spring Pin | 25 | | ✓ | |
| | 3/16" 1–1/2" Spring Pin | 25 | | | |
| | 1/4" X 1–1/4" Spring Pin | 25 | | | |
| | 1/4" X 1–1/2" Spring Pin | 15 | | | |
| 03-313 | **Spring Pins, Assortment Kit** | **45** | | | |
| | 1/8" X 1" Spring Pin | 5 | | | |
| | 1/8" X 1–1/2" Spring Pin | 5 | | | |
| | 5/32" X 3/4" Spring Pin | 3 | | | |
| | 5/32" X 1" Spring Pin | 3 | | | |
| | 3/16" X 1/2" Spring Pin | 5 | | | |
| | 3/16" X 3/4" Spring Pin | 3 | | | |
| | 3/16" X 1" Spring Pin | 3 | | | |
| | 3/16" 1–1/2" Spring Pin | 3 | ✓ | | |
| | 1/4" X 1–1/2" Spring Pin | 2 | | | |
| | 1/4" X 2" Spring Pin | 2 | | | |
| | 5/16" X 1–3/8" Spring Pin | 2 | | | |
| | 5/16" X 1–1/2" Spring Pin | 2 | | | |
| | 5/16" X 2–1/2" Spring Pin | 2 | | | |
| | 3/8" X 1–1/2" Spring Pin | 1 | | | |
| | 3/8" X 2–1/2" Spring Pin | 1 | | | |
| **Woodruff Key Assortment** | | | | | |
| 03-311 | **Woodruff Keys, Assortment Kit** | **30** | | | |
| | #3, 1/8" X 1/2" (404) Woodruff Key | 10 | | | |
| | 1/8" X 5/8" (405) Woodruff Key | 8 | | | |
| | #9, 3/16" X 3/4" (606) Woodruff Key | 4 | ✓ | | |
| | 3/16" X 7/8" (607) Woodruff Key | 4 | | | |
| | #15, 1/4" X 1" (808) Woodruff Key | 4 | | | |

Machinery Keys

Shaft Collars

Spring Pins

Woodruff Keys

L

# Miscellaneous Parts

| OREGON | Replaces | Description | Product Code |
|---|---|---|---|

## Belt Guard

| | | | |
|---|---|---|---|
| **76-020** | MTD 17664-0637 | **Belt Guard – Spindle Assembly**<br>For 42" side-discharge decks and deck "G"<br>Use with Oregon® 82-500 | |

## Blade Brake Assemblies

| | | | |
|---|---|---|---|
| **82-100** | MTD 761-0168 | **Blade Brake**<br>Fits 400-series shallow deck 38" cut &<br>130–498 series tractors | |

## Knobs & Handle Accessories

| | | | |
|---|---|---|---|
| **81-013** | 532183724<br>170146<br>136376 | **Handle Knob Kit** | |
| **81-015** | Honda 53125-VA4-K10<br>Code 3338076 | **Handle Knob**<br>8 mm, 5-star handle<br>For walk-behind mowers | |
| **81-012** | MTD 720-0241 | **Handle Knob**<br>5/16-18 threads | |
| **79-000** | Universal | **Fix-a-Handle**<br>Flat for lower handles<br>For 7/8" tubing<br>Repairs broken handles | |
| **73-836** | Toro 100-3298-03 | **Latch-Handle, LH**<br>For Recycler mowers | |
| **73-837** | Toro 100-3297-03 | **Latch-Handle, RH**<br>For Recycler mowers | |

## Linchpins

| | | | |
|---|---|---|---|
| **02-443** | AMF 1501-901<br>Bobcat 64173-05<br>Bolens 1719762<br>Exmark 809006<br>Kees 903798<br>Snapper 76967 | **Linchpin**<br>Pin dia.: 3/16"<br>Pin length: 1-1/2" under head | |

M

| OREGON | Replaces | Description | Product Code | |
|---|---|---|---|---|

## Linchpins

| | | | |
|---|---|---|---|
| **02-444** | MTD 714-0143<br>Noma 73842 | **Linchpin**<br>Pin dia.: 1/4"<br>Pin length: 1-3/4" under head<br>Zinc plated | |
| **02-445** | Bobcat 64173-01 | **Linchpin**<br>Pin dia.: 5/16"<br>Pin length: 1-3/4"<br>Ring dia.: 1-3/8"<br>“D” shaft style | |
| **02-446** | Scag 04066-01<br>Bobcat 64173-04<br>Encore 109020<br>Exmark 809020<br>Ferris 1520655<br>Toro 3290-384 | **Linchpin**<br>Pin dia.: 7/16"<br>Pin length: 1-3/4"<br>Ring dia.: 1-3/8"<br>Use with Oregon® 48-202<br>“D” shaft style | |
| **02-442** | Universal | **Hitch Pin**<br>Shank dia.: 1/2"<br>Usable space: 3-1/2"<br>For lawn & garden tractors using<br>3-point lift system or draw bars | |
| **08-423** | | **Linchpin Assortment**<br>Total pieces: 50<br>3/16" x 1-1/2": 16<br>3/4" x 1-3/4": 18<br>5/16" x 1-3/4": 6<br>7/16" x 1-3/4": 10 | |

## Lock Assemblies for Tractor Hoods

| | | | |
|---|---|---|---|
| **42-555** | AYP 160793 | **Latch Assembly with Hook**<br>For 42" and 46" decks<br>Use 2 per deck to hold mulching<br>cover plate & rubber strap<br>Overall length: 4-3/4" | |
| **42-557** | MTD 723-0383 | **Grass Bag Retainer Strap**<br>Fits 400-series riders (1995 & newer)<br>For riding mowers and lawn tractors. Attaches to<br>discharge tube to bagger & mower deck<br>Rubber strap length: 6", overall length: 7", width: 7/8" | |

## Mower Cover

| | | | |
|---|---|---|---|
| **81-020** | Universal | **Mower Cover**<br>68" x 40" x 38" | |

M

# Miscellaneous Parts

| OREGON | Replaces | Description | Product Code |
|---|---|---|---|

## Mower Deck Suspension

| | | | |
|---|---|---|---|
| **76-015** | AYP 139868 | **Rear Suspension Arm**<br>For mower deck lift on lawn tractors with 38", 42", 44", 46", & 50" decks<br>Length: 11-1/2", width: 1-1/8"<br>(2) 1/2" center holes on 10-1/2" centers | |
| **76-031** | AYP 175689 | **Trunnion Mower Deck Lift**<br>For lawn tractors with 38", 42", 44", 46", & 50" decks<br>Hole: 1/2", pin: 1/2" | |
| **45-145** | 532151141<br>151141 | **Lift Link — Left Hand**<br>For mower deck lift | |
| **45-146** | 532151140<br>151140 | **Lift Link — Right Hand**<br>For mower deck lift | |

## Rod End Bearings

| | | | |
|---|---|---|---|
| **45-300** | Universal<br>Country Clipper H1885<br>Bobcat 128079 | **Rod End Bearing**<br>Right-hand thread: 1/4-28<br>Bore dia.: 1/4" | |
| **45-305** | Universal | **Rod End Bearing**<br>Right-hand thread: 5/16-24<br>Bore dia.: 5/16" | |
| **45-301** | Universal<br>Encore 453081 | **Rod End Bearing**<br>Right-hand thread: 5/16-24<br>Bore dia.: 5/16" | |
| **45-302** | Universal<br>Scag 48464<br>John Deere AM120124<br>Bobcat 138011 | **Rod End Bearing**<br>Right-hand thread: 3/8-24<br>Bore dia.: 3/8" | |
| **45-306** | Universal | **Rod End Bearing**<br>Right-hand thread: 3/8-24<br>Bore dia.: 3/8" | |
| **45-303** | Gravely 44941<br>John Deere AM103052 | **Rod End Bearing**<br>Right-hand thread: 1/2-20<br>Bore dia.: 1/2" | |

M

## Seal Boots

| OREGON | Replaces | Description | Product Code |
|---|---|---|---|
| 81-102 | Snapper 1-1011<br>Snapper 1-7083 | **Seal Boot — Short**<br>Length: 8"<br>For rear-engine riders with 1-3/4" hub | |

## Yokes

| OREGON | Replaces | Description | Product Code |
|---|---|---|---|
| 06-003 | Dixie Chopper 20214<br>Bobcat 38020<br>Exmark 303105<br>Grasshopper 265537 | **Adjustable Yoke**<br>Female thread size: 5/16-24<br>For 5/16" pin | |

| OREGON | Replaces | Description | Product Code |
|---|---|---|---|
| 06-004 | Exmark 633131<br>John Deere M80373<br>Grasshopper 265545<br>Noma 305530 | **Adjustable Yoke**<br>Female thread size: 3/8-24<br>For 3/8" pin | |

## Shoulder Bolts

| OREGON | Replaces | Description | Product Code |
|---|---|---|---|
| 04-163 | John Deere<br>M8469, M90937 | Shoulder Bolt<br>1/2" x 2-1/2" | |

- Use on 38" deck & front wheels on 46" deck
- Use with Oregon® 72-094 deck wheel

| | | | |
|---|---|---|---|
| 04-151 | Lawn Boy 603441 | Shoulder Bolt Kit | |

- Shoulder length: 1-17/32"
- Overall length: 1-31/32"
- Thread run: 3/8-16

| | | | |
|---|---|---|---|
| 48-011 | Exmark 513547<br>Toro 99-2842 | Shoulder Bolt Kit | |

- Deck wheel bolt for Lazer Z models

## Handle Bolts

| OREGON | Replaces | Description | Product Code |
|---|---|---|---|
| 02-050-0 | Snapper 9-1013 | Handle Bolt | |

- Curved head
- 5/16-18 thread
- Use with Oregon 81-010 tightening knob

## Bar Stud Nut

| OREGON | Replaces | Description | Product Code |
|---|---|---|---|
| 04-009 | Stihl 000-955 | Bar Stud Nut | |

- 8 mm x 1.25
- Fits 028A, 031AV, 034AV, 042AV & 045AV

M

# Mufflers

| OREGON | Replaces | Description | Product Code | |
|---|---|---|---|---|

## Briggs & Stratton

| | | | | |
|---|---|---|---|---|
| **35-001** | 89966 | **Muffler**<br>1/2" pipe thread<br>For 2, 3, & 4 HP engines<br>Fits 60000, 80000, 92000, & 110900 series<br>Use with Oregon® 02-128 locknut<br>Length: 4-3/4", OD: 1-1/2" | | |
| **35-007** | 89966 | **Muffler**<br>1/2" pipe thread<br>Economy version of Oregon 35-001<br>Light-weight<br>Length: 4-3/4", OD: 1-1/2"<br>Use with Oregon 02-128 locknut | | |
| **35-002** | 298830<br>394569S | **Muffler**<br>1/2" pipe thread<br>For 3, 3-1/2, & 4 HP engines<br>Fits 92500, 92900, & 110900 series<br>Length: 2-1/2", OD: 2-5/8" | | |
| **35-023** | 391435<br>394569<br>394569S<br>298830 | **Muffler**<br>OEM style<br>For 3-1/2 & 4 HP engines<br>Painted gray, brass welds<br>Length: 2-3/4", OD: 3" | | |
| **35-004** | 297274<br>297506<br>494585<br>493936 | **Muffler**<br>Bolt-on style<br>For 4 & 5 HP engines<br>Fits 100200, 100900, 130200, & 130900 series<br>Length: 4", width: 3-5/8", thickness: 1-1/2"<br>Center-to-center: 1-1/2" | | |
| **35-005** | 294599<br>294599S | **Muffler**<br>3/4" pipe thread<br>For 5, 7, & 8 HP engines<br>Fits 130200, 130900, 170700, 190700, 170499, & 190400 series<br>Use with Oregon 02-130 locknut<br>Length: 6-1/4", OD: 2-3/8" | | 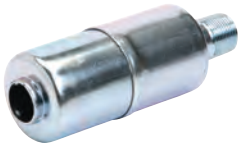 |
| **35-012** | 393010<br>393010S | **Muffler**<br>Super low tone<br>3/4" pipe thread<br>For 7 & 8 HP engines<br>Fits 170400, 170700, 190400, & 190700 series<br>Use with Oregon 02-130 locknut<br>Length: 5-3/8", OD: 3-1/8" | | |
| **35-014** | 391313<br>692304 | **Muffler**<br>Bolt-on type, super low tone<br>For 5, 7, & 8 HP engines<br>Fits 100000, 130200, 130900, 170400, 170700, 190400, & 190700 series<br>Length: 4-1/2", width: 4-1/4", thickness: 2-3/4"<br>1-9/16" center-to-center | | |

M

| OREGON | Replaces | Description | Product Code | |
|---|---|---|---|---|
| **Briggs & Stratton** | | | | |
| **35-026** | 299477<br>299477S<br>391569<br>391569S | **Muffler**<br>For 10 & 11 HP engines<br>Pipe length: 4-3/4", NPT: 1"<br>Use with Oregon® 02-129 locknut | | |
| **35-022** | 394180<br>491413<br>394170<br>691874 | **Muffler**<br>For 10 & 11 HP engines<br>Fits 220400, 220700, 251400,<br>252400, 251700, & 252700 series<br>Length: 5", width: 4-1/2", thickness: 3-1/2"<br>Center-to-center: 1-7/8" | | |
| **35-027** | 496106<br>496106S<br>490547 | **Muffler**<br>Quantum super low tone | | |
| **35-006** | 392989 | **Muffler**<br>1" pipe thread<br>Length: 3-1/4", OD: 4-1/2" | | |
| **Gravely** | | | | |
| **35-543** | 18543 | **Muffler**<br>For all four wheel tractors<br>Length: 8-1/4", diameter: 3-3/4",<br>Inlet: 1-5/16" | | |
| **Honda** | | | | |
| **35-034** | 18310-ZE2-W00 | **Muffler**<br>For 8 HP engine<br>Fits GX240 series engines<br>Shield NOT included | | |
| **35-036** | 18310-ZE2-W61<br>Code 6145353 | **Muffler**<br>Fits GX340 & GX390 series engine<br>Includes shield | | |

M

# Mufflers

| OREGON | Replaces | Description | Product Code | |
|---|---|---|---|---|
| **Honda** | | | | |
| **35-038** | 18310-ZF1-000<br>Code 3683703 | **Muffler**<br>Fits GX160 series engine<br>Includes shield | | |
| **35-037** | 18310-ZM0-000 | **Muffler**<br>Fits GCV135 & GVC160 series engines<br>Shield NOT included | | |
| **35-041** | 18320-ZF1-HO1<br>Code 4644811 | **Muffler Shield**<br>Fits GXV160 series engine | | |
| **35-043** | 18320-ZE2-W61<br>Code 4684098 | **Muffler Shield**<br>Fits GX240 series engine | | |
| **35-044** | 18320-ZE3-W01<br>Code 4640843 | **Muffler Shield**<br>Fits GX340 & GX390 series engines | | |
| **35-045** | 18330-ZH9-N00<br>Code 3682036 | **Muffler Pipe**<br>Fits GX240, GX340, & GX390 series engines | | |
| **Kohler** | | | | |
| **35-006** | 275679<br>275679S<br>236649 | **Muffler**<br>1" pipe thread<br>Fits K241 to K321 & K532 to K582<br>Length: 3-1/4", OD: 4-1/2" | | |
| **35-008** | 220521<br>220521S<br>A220521 | **Muffler**<br>3/4" pipe thread<br>Adaptable to any 3/4" pipe<br>For 4 HP engines<br>Fits K90 & K91 series | | |

M

| OREGON | Replaces | Description | Product Code |
|---|---|---|---|

## Murray

| | | | |
|---|---|---|---|
| **35-010** | 23343<br>23483<br>023342 | **Muffler**<br>For 11 HP tractor<br>Pipe extension: 7", length: 10"<br>NPT: 1", diameter: 4-1/2"<br>Use with Oregon® 02-129 locknut | |

## Snapper

| | | | |
|---|---|---|---|
| **35-016** | 1-8198 | **Muffler**<br>For Snapper riders with Briggs & Stratton engine using header pipes<br>Length: 5", width: 3-3/8", thickness: 2-1/8"<br>Use with Oregon 35-903 exhaust pipe | |
| **35-033** | 5-1996 | **Muffler**<br>For Snapper riders with 12 & 12.5 HP Briggs & Stratton engines<br>Overall length: 12"<br>OD pipe: 1", OD muffler: 5" | |
| **35-050** | 7-4453 | **Muffler**<br>Fits Yard Cruisers with 14.5 HP engine | |

## Tecumseh

| | | | |
|---|---|---|---|
| **35-006** | 32043B | **Muffler**<br>1" pipe thread<br>Fits OH160-180 engines<br>Length: 3-1/4" OD: 4-1/2" | |
| **35-003** | 27181B<br>27181C<br>27181A | **Muffler**<br>For 2-1/2–3-1/2 HP engines<br>Fits ECH90, ECV100, H22, H25, H30, H35, LAV22, LAV25, LAV35, LAV40, LAV50, TVS75, TVS90, TVS105, & TVS120 series<br>Length: 2", OD: 2-1/4", center-to-center: 1-3/8"<br>Bolts & gasket included | |
| **35-032** | 35771<br>35771A<br>32648A<br>33697A0 | **Muffler**<br>For 4–7 HP engines<br>Fits HS40, LAV40, HS50, & LAV50 series | |

M

# Mufflers

| OREGON | Replaces | Description | Product Code |
|---|---|---|---|

## Tecumseh

| | | | |
|---|---|---|---|
| **35-008** | 29633 | **Muffler**<br>3/4" pipe thread<br>For 6, 7, & 8 HP engines<br>Fits H60, H70, V60, V70, HM80, & VM80 series | |
| **35-028** | 32401 | **Muffler**<br>For Snow King engines with<br>4–7 HP horizontal engines<br>Fits H40 to H70, V50, V60, & V70 | |
| **35-015** | 33280<br>33280A<br>34185B | **Muffler**<br>Bolt-on type<br>For 7–10 HP engines<br>Fits HM70, VM70, HM80, VM80, HM100, VM100, TVM170 to TVM220 series<br>Length: 5-3/4", width: 4-3/4", height: 2-5/8"<br>Center-to-center: 1-1/2" | |

## Toro / Wheel Horse

| | | | |
|---|---|---|---|
| **35-021** | 110771<br>110774<br>Murray 90330PA<br>Murray 90330SE<br>AMF/Noma 54765/54766<br>Roper 101273 | **Muffler**<br>For LTV series<br>OD: 4-1/2", thickness: 3"<br>Bolts & heat shield included | |

## Wisconsin

| | | | |
|---|---|---|---|
| **35-006** | WD66AS2 | **Muffler**<br>Adaptable to any 1" pipe<br>Fits AEH, AEN, AENLD, AGN, AHH, S10D, S12D, & S14D<br>Diameter: 4-3/4", thickness: 3-1/4", pipe thread: 1" | |

M


Can't find what you're looking for?
Try us online to search the latest products available.

OregonProducts.com

## Notes

# SECTIONS O–S


Oil Filters . . . . . LG 812–820

Pulleys . . . . . LG 821–841

Seats . . . . . LG 842–845

Snow Thrower Parts . . . . . LG 846–863

Spark Plugs . . . . . LG 864–868

Spindles . . . . . LG 869–910

Sprayers . . . . . LG 911–912

Springs. . . . . LG 913–914

Starters, Starter Parts, and
Starter Rope . . . . . LG 915–937

Steering Parts . . . . . LG 938–941

Switches . . . . . LG 942–951

# Oil Filters

**Metal Shell**

**Relief Valve Assembly**
Relief valve opens when necessary to provide engine with oil under all conditions

**Perforated Steel Core**
Allows full flow while giving rigid support

**Anti-Drain Back Valve**
Anti-drain back valve prevents oil from draining out of the filter during engine shutdown

**Metal End Cap**
Metal end caps and thermo setting adhesive provide positive seals

**Resin Impregnated**
Paper filter medium
Cured resin impregnated paper removes harmful foreign particle

**Metal End Cap**
Metal end caps and thermo setting adhesive provide positive seals

**Lid Assembly**
Lid assembly is roll seamed to the shell which provides a leak-tight assembly

## Engine Oil Filters

| OREGON | Replaces | Description | Product Code |
|---|---|---|---|
| **83-283** | Briggs & Stratton 491056 | **Oil Filter**<br>HT: 3-1/8", OD: 3", seal OD: 2-13/16"<br>Mounting thread: 3/4"-16<br>Micron: 27, relief pressure: 8–11 PSI<br>Anti-drain back valve: yes | |
| **83-403** | | **Shop Pack** - 12 of 83-283 | |
| **83-503** | | **Bulk Pack** - 48 of 83-283 | |
| **83-285** | Briggs & Stratton 692513 | **Oil Filter**<br>For 6.5 HP Intek Pro model engines<br>Fits 122600 & 123600<br>HT: 2-7/8", OD: 2-5/8", seal OD: 2-3/8"<br>Mounting thread: 3/4"-16<br>Micron: 27, Relief pressure: 8–11 PSI<br>Anti-drain back valve: yes | |
| **83-013** | Briggs & Stratton 492932<br>Briggs & Stratton 492932S | **Oil Filter**<br>For Vanguard engines 5 thru 14 HP<br>HT: 2-1/4", OD: 3", seal OD: 2-13/16"<br>Mounting thread: 3/4"-16<br>Micron: 27, relief pressure: 8–11 PSI<br>Anti-drain back valve: yes | |
| **83-401** | | **Shop Pack** - 12 of 83-013 | |
| **83-501** | | **Bulk Pack** - 48 of 83-013 | |
| **69-281** | | **Clamshell** - 1 of 83-013 | |

| OREGON | Replaces | Description | Product Code |
|---|---|---|---|

## Engine Oil Filters

**83-280**
Briggs & Stratton 5076D
Briggs & Stratton 695396
Briggs & Stratton 696854

**Oil Filter**
Extended life version of 492932 (Oregon 83-013)
HT: 2-1/4", OD: 3", seal OD: 2-13/16"
Mounting thread: 3/4"-16, micron: 27
Relief pressure: 8–11 PSI, anti-drain back valve: yes

---

**83-030**
Briggs & Stratton 795990

**Oil Filter**
Fits 121Q72, 121S72, 121S75, 121S77, 12Q972, 12S972, & 12S975
HT: 2-3/8", OD: 2", seal OD: 1-3/4"

---

**83-029**
Generac 070185D

**Oil Filter**
For Generac engines.
HT: 2-7/8", OD: 2-5/8", seal OD: 2-7/8"
Mounting thread: 3/4"-16
Micron: 27, relief pressure: 8–11 PSI
Anti-drain back valve: yes

---

**83-000**
Honda 15400-PFB-014
Honda 15400-PFB-004
Honda 15400-PJ7-015
Honda 15400-PM3-004

**Oil Filter**
For many Honda water-cooled engines
HT: 2-1/2", OD: 2-1/2", seal OD: 2-13/16"
Mounting thread: M20 x 1.5
Micron: 27, relief pressure: 8–11 PSI
Anti-drain back valve: yes

# Oil Filters

| OREGON | Replaces | Description | Product Code |
|---|---|---|---|

## Engine Oil Filters

**83-301**

Honda 15410-MJO-405
Honda 15400-679-023
Honda 15400-POH-305
Honda 15410-MJO-004
John Deere AM100750
John Deere AM101378
John Deere M806418
Kubota 70000-15241
Troy Bilt 1874139
Yanmar 129150-35150

**Oil Filter**
Fits model GX60K1
For water-cooled engines on tractor models 3813 & 4514
HT: 2-7/8", OD: 3-1/8", seal OD: 2-1/2"
Mounting thread: M20 x 1.5
Micron: 27, relief pressure: 11–14 PSI
Anti-drain back valve: yes

**83-302**

Honda 15400-PLM-A01PE
Honda 15400-ZJ1-004

**Oil Filter**
Fits GX610, GX620, GXV340, GXC390, GXV630, GXV660, GXV670, GXV690, & BF marine engines, EB12 gen sets & H6522 compact tractors.
HT: 3-3/8", OD: 2-11/16", mounting thread: 20 mm x 1.5 mm
Micron: 27

**83-001**

Honda 15410-MFJ-D01

**Oil Filter** – NEW
Fits Bobcat 453 & 463 skid steer loaders, MT50, MT52, & MT55 mini-track loaders, 319, 320D, 321, 322, 323, 324, 418, E08, E10, E14, & E16 compact excavators, 2200 & 2300 utility vehicles; Caterpillar 300.9D, 301.4C, 301.7D, 302.2D, 302.4D, & 302.7D; Ditchwitch MX9, MX15, & MX27; Hitachi Zaxis 8, ZX17U-2, ZX8-2, JLG400CRT, 330CRT, & 260MRT; John Deere 322, 330, 332, 355D, 430, & 455 diesels, 655, 755, 756, 855, & 856 tractors, 1420, 1435, F735, F912, F915, F925, F932, F935, GX355, X495, X595, X740, X744, X748, X749, & HPX diesel Gators, 2500 & 2500A diesel Tri-Plex greens mowers, 2500B & 2500E hybrid diesel riding greens mowers, 2243, 2653, & 2653A diesel professional utility mowers, 2653B, 2020, 2020A, 2030, & 2030A Pro Gators; Kubota 316, 463, B7300, B7400, B7410, BX1500, BX1800, BX1830, BX1850, BX1860, BX1880, BX2230, BX2350, BX2360, BX2370, BX2380, BX23, BX24, BX25, G1800, G1900, G2000, G2160, G3200, GF1800, GF1800E, GR2100, GR2120, KX41-3, PC09, RTV500, & RTV900,
Height: 2-1/2", outer diameter: 2-5/8", thread: 20mm x 1.5mm
Microns: 20

O

Can't find what you're looking for?
Try us online to search the latest products available.

OregonProducts.com

| OREGON | Replaces | Description | Product Code |
|---|---|---|---|

## Engine Oil Filters

| | | | |
|---|---|---|---|
| **83-282** | Kawasaki 49065-2074<br>Kawasaki 49065-2078<br>Kawasaki 49065-2071<br>Kawasaki 49065-2070<br>Kawasaki 49065-2057<br>Kawasaki 49065-7010<br>Club Car 41016-67<br>Club Car 1016467<br>Cushman 833438<br>EZGO 607454<br>John Deere AM101054<br>John Deere AM107423<br>Onan 122-0737<br>Snapper 7-7355<br>Toro NN10684<br>Woods 72859 | **Oil Filter**<br>New smaller OEM version<br>Replaces filter on most Kawasaki engines<br>HT: 2-7/8", OD: 2-3/4", seal OD: 2-3/4"<br>Mounting thread: 3/4"–16<br>Micron: 28, relief pressure: 8–11 PSI<br>Anti-drain back valve: yes | |
| **83-402** | | **Shop Pack** - 12 of 83-282 | |
| **83-502** | | **Bulk Pack** - 48 of 83-282 | |
| **69-282** | | **Clamshell** - 1 of 83-282 | |
| **83-013** | Kawasaki 49065-7007 | **Oil Filter**<br>Fits models FR541V, FR600V, FR651V, FR691V, FR730V, FS481V, FS541V, FS600V, FS651V, FS691V, FS730V, FX481V, FX541V, FX600V, FX651V, FX691V, & FX730V<br>HT: 2-1/4", OD: 3", seal OD: 2-13/16", mounting thread: 3/4"-16<br>Micron: 27, relief pressure: 8–11 PSI, anti-drain back valve: yes | |
| **83-401** | | **Shop Pack** - 12 of 83-013 | |
| **83-501** | | **Bulk Pack** - 48 of 83-013 | |
| **69-281** | | **Clamshell** - 1 of 83-013 | |
| **83-013** | Kohler 28 050 01-S | **Oil Filter**<br>HT: 2-1/4", OD: 3", seal OD: 2-13/16"<br>Mounting thread: 3/4"-16<br>Micron: 27, relief pressure: 8–11 PSI<br>Anti-drain back valve: yes | |
| **83-401** | | **Shop Pack** - 12 of 83-013 | |
| **83-501** | | **Bulk Pack** - 48 of 83-013 | |
| **83-028** | Kohler 277233<br>John Deere AM39687 | **Oil Filter**<br>Fits models K482, K532, & K582<br>HT: 4-1/2", OD: 3", seal OD: 2-7<br>Mounting thread: 3/4"-16<br>Micron: 28, relief pressure: 8–11 PSI<br>Anti-drain back valve: yes | |

# Oil Filters

| OREGON | Replaces | Description | Product Code |
|---|---|---|---|

## Engine Oil Filters

| | | | |
|---|---|---|---|
| **83-283** | Kohler 52 050 02-S | **Oil Filter**<br>For twin-cylinder KT & Magnum engines<br>Fits CH/DV 18-26/730-7445 PRO, LV625-675,<br>LH630-760, CH11-15 PRO, & CV13-15/493 PRO<br>HT: 3-1/8", OD: 3", seal OD: 2-13/16"<br>Mounting thread: 3/4"-16<br>Micron: 27, relief pressure: 8–11 PSI<br>Anti-drain back valve: yes | |
| **83-403** | | **Shop Pack** - 12 of 83-283 | |
| **83-503** | | **Bulk Pack** - 48 of 83-283 | |
| **83-284** | Kohler 12 050 01-S<br>Bad Boy 063-5400-00<br>John Deere AM125424<br>John Deere KH1205008<br>John Deere GY20577<br>Woods 70820 | **Oil Filter**<br>HT: 2-5/8", OD: 3", seal OD: 2-13/16"<br>Mounting thread: 3/4"-16<br>Micron: 27, relief pressure: 8–11 PSI<br>Anti-drain back valve: yes | |
| **83-404** | | **Shop Pack** - 12 of 83-284 | |
| **83-013** | Tecumseh 36262<br>Tecumseh 36563<br>Tecumseh 36961 | **Oil Filter**<br>Fits OHV 115-170<br>HT: 2-1/4", OD: 3", seal OD: 2-13/16"<br>Mounting thread: 3/4"-16<br>Micron: 27, relief pressure: 8–11 PSI<br>Anti-drain back valve: yes | |
| **83-401** | | **Shop Pack** - 12 of 83-013 | |
| **83-501** | | **Bulk Pack** - 48 of 83-013 | |
| **83-283** | Onan 122-0645<br>Case C26191<br>John Deere AM101207<br>Toro NN10147<br>Wheel Horse NN10147<br>Woods 70939 | **Oil Filter**<br>Fits Onan engine models B43, B48, P216<br>P216, 218, 200, & 600<br>For twin-cylinder KT & Magnum series engines<br>HT: 3-1/8", OD: 3", seal OD: 2-13/16"<br>Mounting thread: 3/4"-16<br>Micron: 27, relief pressure: 8–11 PSI<br>Anti-drain back valve, yes | |
| **83-403** | | **Shop Pack** - 12 of 83-283 | |
| **83-503** | | **Bulk Pack** - 48 of 83-283 | |

| OREGON | Replaces | Description | Product Code |
|---|---|---|---|

## Hydraulic / Transmission Filters

**83-014** — MTD 723-0405

**Hydraulic Oil Filter**
For MTD log splitters
HT: 5-1/4", OD: 3-3/4"
Mounting thread: 1"-12
Micron: 10

---

**83-011** — Scag 48757
Encore 453058
Cushman 834702
Deweze 520403
Hustler 783936
Ferris-Snapper 502 1357x1

**Transmission Oil Filter**
For commercial mowers
Steiner, Bobcat, & Land Pride
HT: 5-1/4", OD: 3-11/16", seal OD: 2-3/4"
Mounting thread: 1"-12, micron: 10

---

**83-012** — Toro 67-8110
Scag 48462-01
Snapper 2-7164

**Transmission Oil Filter**
For Groundsmaster 300 series commercial mowers &
Pro Line commercial mowers
HT: 5-1/4", OD: 3-11/16", seal OD: 2-3/4"
Mounting thread: 1"-12
Micron: 10

---

**83-300** — Ariens 31928
Bolens 1719859/1726450
Cub Cadet 395789-R2
Cub Cadet 723-3014
Cushman 111836
Gravely 39306
Howard Price 6033
John Deere AM-35176
John Deere AM39653
MTD 727-0162
Onan 122-0185
Simplicity 171439/1650954
Troy Bilt 1719859
Troy Bilt 1726450
Wheel Horse 108335

**Transmission Oil Filter**
For many brands with hydro-static transmissions
HT: 3-3/4", OD: 3-13/16", seal OD: 2-13/16"
Mounting thread: 3/4"-16
Micron: 28

---

**83-010** — Dixie Chopper 60105
Dixon 5565
Encore 423063
Exmark 513211
Honda 25641-ZE4-003
Ingersoll C33445
Kees 101164
Kees 102606
Hustler 768341

**Transmission Oil Filter**
For Quinstar and Zipper mowers
HT: 3-7/8", OD: 3", seal OD: 2-3/4"
Mounting thread: 3/4"-16
Micron: 10

---

**83-400** — **Shop Pack** - 12 of 83-010

# Oil Filters

| OREGON | Replaces | Description | Product Code |
|---|---|---|---|

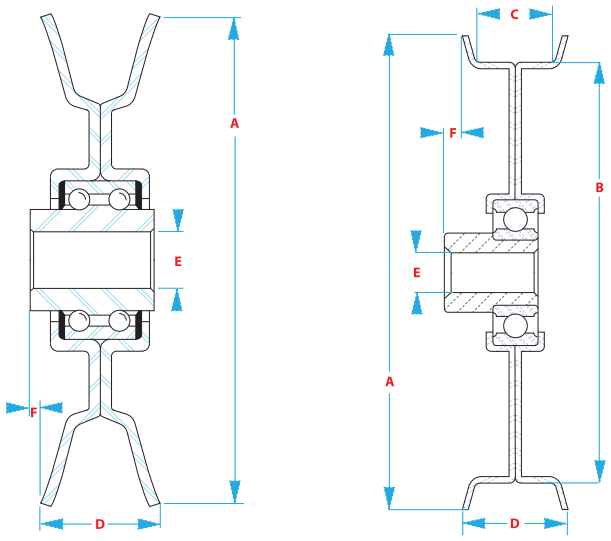


| OREGON | OD: (A) | Flat OD: (B) | Flat Width (C) | Overall Width (D) | Bore: (E) | Offset: (F) | Material | Product Code |
|---|---|---|---|---|---|---|---|---|
| **Flat Idler Pulleys – No Flanges** | | | | | | | | |
| 34-027 | 2-1/4 | 2-1/4 | 1-1/4 | 1-1/4 | 3/8 | 1/8 | Steel | |
| 34-028 | 2-3/4 | 2-3/4 | 1-3/16 | 1-3/16 | 3/8 | 5/32 | Steel | |
| 34-029 | 3-1/4 | 3-1/4 | 1-5/16 | 1-5/16 | 3/8 | 1/16 | Steel | |
| 78-020 | 4 | 4 | 1-1/2 | 1-1/2 | .669* | None | Steel | |
| **Flat Idler Pulleys – Standard-Duty** | | | | | | | | |
| 34-002 | 2 | 1-7/8 | 3/4 | 7/8 | 3/8 | 1/16 | Steel | |
| 34-021 | 2-1/8 | 1-7/8 | 1/2 | 21/32 | 1/4 | 3/16 | Steel | |
| 34-001 | 2-1/8 | 1-7/8 | 1/2 | 21/32 | 3/8 | 3/16 | Steel | |
| 34-003 | 2-1/2 | 2 | 13/16 | 1-1/16 | 3/8 | 1/4 | Steel | |
| 34-006 | 2-15/32 | 2-1/4 | 1 | 1-1/8 | 3/8 | 1/16 | Steel | |
| 34-005 | 2-15/32 | 2-1/4 | 3/4 | 7/8 | 3/8 | 1/16 | Steel | |
| 34-010 | 3-1/8 | 2-3/4 | 7/8 | 1-1/8 | 3/8 | 1/16 | Steel | |
| 34-008 | 3-1/8 | 2-3/4 | 3/4 | 7/8 | 3/8 | 1/16 | Steel | |
| 34-012 | 3-1/4 | 3 | 3/4 | 15/16 | 3/8 | 1/32 | Steel | |
| 34-011 | 3-1/4 | 2-3/4 | 1-1/4 | 1-9/16 | 3/8 | 1/16 | Steel | |
| 34-009 | 3-1/4 | 2-3/4 | 7/8 | 1 | 3/8 | 1/8 | Steel | |
| 34-017 | 3-1/2 | 3-1/4 | 1 | 1-1/8 | 3/8 | 1/16 | Steel | |
| 34-018 | 3-5/8 | 3-1/4 | 1-1/4 | 1-3/8 | 3/8 | 1/16 | Steel | |
| 34-016 | 3-3/4 | 3-1/8 | 3/4 | 1 | 3/8 | 3/32 | Steel | |
| 34-015 | 3-3/4 | 3-1/4 | 3/4 | 7/8 | 3/8 | 1/16 | Steel | |
| 34-013 | 4 | 3-1/8 | 3/4 | 1-1/4 | 3/8 | 1/8 | Steel | |
| 34-014 | 4 | 3-1/8 | 3/4 | 1-1/4 | 3/8 | 3/16 | Steel | |
| 34-025 | 4-3/8 | 4-1/16 | 3/4 | 1 | 3/8 | 1/4 | Steel | |
| 34-019 | 4-1/2 | 4 | 3/4 | 7/8 | 3/8 | 1/16 | Steel | |
| 34-020 | 4-1/2 | 4 | 1 | 1-1/8 | 3/8 | 1/16 | Steel | |
| **V-Idler Pulleys – Standard-Duty** | | | | | | | | |
| 34-031 | 2-5/8 | N/A | N/A | 5/8 | 3/8 | 3/16 | Steel | |
| 34-210 | 2-5/8 | N/A | N/A | 5/8 | 7/16 | None | Steel | |
| 34-030 | 3-1/16 | N/A | N/A | 23/32 | 3/8 | 1/8 | Steel | |
| 34-034 | 3-1/16 | N/A | N/A | 5/8 | 3/8 | 1/8 | Steel | |
| 34-033 | 3-1/16 | N/A | N/A | 3/4 | 3/8 | 1/8 | Steel | |
| 34-035 | 3-1/8 | N/A | N/A | 1/2 | 3/8 | 7/32 | Steel | |
| 34-036 | 3-1/2 | N/A | N/A | 3/4 | 3/8 | 1/8 | Steel | |
| 34-037 | 4 | N/A | N/A | 23/32 | 3/8 | 3/16 | Steel | |
| 34-038 | 4 | N/A | N/A | 13/16 | 3/8 | 3/32 | Steel | |
| 34-044 | 4-1/2 | N/A | N/A | 3/4 | 3/8 | None | Steel | |

# Pulleys

| OREGON | OD: (A) | Flat OD: (B) | Flat Width (C) | Overall Width (D) | Bore: (E) | Offset: (F) | Material | Product Code |
|---|---|---|---|---|---|---|---|---|
| **Flat Idler Pulleys – High Speed Bearing – Heavy-Duty** | | | | | | | | |
| 78-028 | 3-1/8 | 2-3/4 | 7/8 | 1-1/8 | 3/8 | 1/8 | Composite | |
| 34-023 | 3-3/16 | 2-3/4 | 7/8 | 1 | .669* | None | Steel | |
| 78-130 | 3-3/16 | 2-5/8 | 3/4 | 1 | 3/8 | 3/8 | Composite | |
| 78-027 | 3-1/4 | 2-3/4 | 7/8 | 1 | 1/2 | None | Steel | |
| 78-032 | 3-1/4 | 2-3/4 | 1-1/8 | 1-1/2 | .669* | None | Steel | |
| 34-209 | 3-3/8 | 2-11/16 | 7/8 | 1-1/16 | 3/8 | 3/16 | Steel | |
| 78-129 | 3-3/8 | 2-3/4 | 3/4 | 1 | .669* | None | Composite | |
| 78-128 | 3-1/2 | 2-5/8 | 3/4 | 1-3/16 | 5/16 | 3/8 | Steel | |
| 78-031 | 3-1/4 | 2-3/4 | 7/8 | 1 | 3/8 | 3/16 | Steel | |
| 78-132 | 3-1/2 | 2-3/4 | 3/4 | 1-1/8 | 1/4 | 3/8 | Steel | |
| 78-033 | 3-1/2 | 3 | 3/4 | 7/8 | .669* | None | Steel | |
| 78-056 | 3-3/4 | 3 | 3/4 | 1 | 3/8 | 1-3/16 | Composite | |
| 34-826 | 3-11/32 | 3-1/4 | 7/8 | 1 | 1/2 | None | Composite | |
| 78-054 | 3-3/4 | 2-7/8 | 1 | 1-3/8 | 3/8 | 3/8 | Steel | |
| 78-114 | 3-3/4 | 3-1/4 | 3/4 | 7/8 | 3/8 | 1/16 | Steel | |
| 78-034 | 3-3/4 | 3-1/4 | 3/4 | 7/8 | .669* | None | Steel | |
| 34-100 | 3-7/16 | 3 | 3/4 | 7/8 | 5-16 | 5/8 | Composite | |
| 34-104 | 3-13/16 | 3 | 1 | 1-3/8 | 3/8 | 1/16 | Steel | |
| 78-134 | 3-13/16 | 3-1/8 | 3/4 | 1-1/8 | 5/16 | 3/8 | Steel | |
| 34-046 | 3-7/8 | 3-1/16 | 3/4 | 1-3/32 | 3/8 | 1/8 | Steel | |
| 34-205 | 4 | 3-1/2 | 7/8 | 1-1/4 | 3/8 | 1/8 | Steel | |
| 78-013 | 4 | 3-1/16 | 1 | 1-1/2 | 3/8 | 1/8 | Steel | |
| 34-022 | 4-1/8 | 3-3/8 | 7/8 | 1-1/16 | .669* | None | Steel | |
| 34-041 | 4-1/8 | 3-1/2 | 7/8 | 1-1/8 | 3/8 | 1/16 | Composite | |
| 34-039 | 4-1/8 | 3-3/8 | 3/4 | 1-3/16 | 3/4 | None | Steel | |
| 78-050 | 4-1/8 | 3-1/2 | 7/8 | 1-1/16 | 3/8 | 3/32 | Steel | |
| 78-043 | 4-1/4 | 3-3/4 | 1 | 1-1/4 | 3/8 | 1/8 | Steel | |
| 78-053 | 4-5/16 | 3-1/2 | 1 | 1-3/8 | 3/8 | 3/8 | Steel | |
| 78-112 | 4-3/8 | 4-1/16 | 3/4 | 1 | .669* | None | Steel | |
| 78-044-1 | 4-1/2 | 4 | 1 | 1-1/8 | 3/8 | 1/64 | Steel | |
| 34-007 | 4-1/2 | 4 | 3/4 | 1 | 3/8 | 3/16 | Steel | |
| 78-052 | 4-1/2 | 3-5/8 | 5/8 | 1 | 3/8 | 1/4 | Steel | |
| 34-024 | 4-1/2 | 4 | 3/4 | 1 | .625* | None | Steel | |
| 78-021 | 4-5/8 | 4 | 3/4 | 1 | 1/2 | None | Composite | |
| 78-049 | 4-5/8 | 4 | 3/4 | 1-5/16 | .669* | None | Steel | |
| 78-037 | 4-7/16 | 4 | 1 | 1-3/16 | .669* | None | Steel | |
| 34-004 | 4-7/16 | 4 | 1 | 1-3/16 | 1/2 | None | Steel | |
| 34-820 | 4-3/4 | 4 | 1 | 1-5/16 | 3/8 | 1/8 | Composite | |
| 34-822 | 4-3/4 | 4 | 7/8 | 1-5/16 | 1/2 | None | Composite | |
| 78-055 | 4-3/4 | 4 | 3/4 | 1-5/16 | .669* | None | Steel | |
| 78-046 | 4-7/8 | 4-1/16 | 3/4 | 1-1/8 | 3/8 | 3/32 | Steel | |
| 78-110 | 4-7/8 | 4-1/16 | 3/4 | 1-1/8 | 3/8 | 1/16 | Steel | |
| 34-201 | 4-7/8 | 4 | 7/8 | 1-1/8 | 3/8 | 1/8 | Steel | |
| 78-098 | 4-7/8 | 4 | 3/4 | 1-3/16 | 3/8 | 5/32 | Steel | |
| 78-007 | 5 | 4-1/2 | 1 | 1-1/8 | 3/8 | 3/8 | Composite | |
| 78-133 | 5-1/8 | 4-1/2 | 1 | 1-1/2 | .669* | None | Steel | |
| 34-206 | 5-3/16 | 5 | 1-1/4 | 1-7/16 | 3/8 | 1/16 | Steel | |
| 34-109 | 5-3/16 | 4-1/2 | 1-1/4 | 1-5/8 | .669* | None | Steel | |
| 34-103 | 5-1/4 | 4-1/2 | 5/8 | 1-3/16 | .669* | None | Steel | |
| 78-051 | 5-1/2 | 4-3/4 | 1-3/16 | 1-9/16 | 3/8 | 11/16 | Steel | |
| 78-025 | 5-1/2 | 5 | 1-1/16 | 1-3/8 | .669* | None | Steel | |
| 78-006 | 5-1/2 | 5 | 1-1/16 | 1-3/8 | .669* | None | Steel | |
| 78-022 | 5-1/2 | 5 | 1-1/16 | 1-3/8 | .669* | None | Steel | |
| 78-047 | 5-3/4 | 5 | 1-1/16 | 1-1/2 | 3/8 | 7/16 | Steel | |
| 78-111 | 5-3/4 | 5 | 1-1/16 | 1-1/2 | 3/8 | None | Steel | |
| 78-300 | 5-3/4 | 5 | 1-1/16 | 1-1/2 | 3/8 | 1/4 | Steel | |
| 78-026 | 5-7/8 | 5 | 1-1/4 | 1-1/2 | .669* | None | Composite | |
| 78-116 | 6-1/4 | 5-1/2 | 1" | 1-1/8" | 1/2 | 5/16 | Steel | |
| 78-048 | 6 | 5-1/8 | 1-1/8 | 1-7/16 | 3/8 | None | Steel | |
| 78-023 | 6-3/4 | 6 | 1-1/8 | 1-3/8 | .669* | None | Steel | |

| OREGON | OD: (A) | Flat OD: (B) | Flat Width (C) | Overall Width (D) | Bore: (E) | Offset: (F) | Material | Product Code |
|---|---|---|---|---|---|---|---|---|
| **V-Idler Pulleys – High Speed Bearing – Heavy-Duty** | | | | | | | | |
| 78-045 | 2-1/2 | N/A | N/A | 11-16 | 3/8 | 3/16 | Composite | |
| 34-102 | 2-13/16 | N/A | N/A | 5/8 | .669* | None | Composite | |
| 34-042 | 3-1/16 | N/A | N/A | 5/8 | .669* | None | Steel | |
| 34-824 | 3 | N/A | N/A | 11/16 | .625* | None | Composite | |
| 34-049 | 3-9/16 | N/A | N/A | 13/16 | 3/8 | 5/32 | Steel | |
| 34-043 | 3-9/16 | N/A | N/A | 13/16 | .625* | None | Steel | |
| 78-131 | 3-11/16 | N/A | N/A | 13/16 | .669* | 1/4 | Steel | |
| 78-029 | 4 | N/A | N/A | 11/16 | 3/8 | 3/16 | Steel | |
| 78-040 | 4 | N/A | N/A | 11/16 | .669* | None | Steel | |
| 78-041 | 4 | N/A | N/A | 13/16 | .669* | None | Steel | |
| 78-010 | 4-3/8 | N/A | N/A | 1 | 5/8 | None | Steel | |
| 78-113 | 4-1/2 | N/A | N/A | 13/16 | 3/8 | 5/16 | Steel | |
| 78-014 | 4-1/2 | N/A | N/A | 1-1/16 | 3/8 | 1/8 | Steel | |
| 78-000 | 4-1/2 | N/A | N/A | 3/4 | .669* | None | Steel | |
| 34-032 | 4-1/2 | N/A | N/A | 3/4 | 3/4 | None | Steel | |
| 78-121 | 4-7/8 | N/A | N/A | 15/16 | 3/8 | 3/16 | Steel | |
| 78-005 | 5 | N/A | N/A | 1-1/8 | .669* | None | Steel | |
| 34-106 | 5 | N/A | N/A | 7/8 | .669* | None | Steel | |
| 34-107 | 5 | N/A | N/A | 7/8 | 3/8 | 1/8 | Steel | |

## High Speed Idlers

| OREGON | OD: (A) | Flat OD: (B) | Flat Width (C) | Overall Width (D) | Bore: (E) | Offset: (F) | Material | Product Code |
|---|---|---|---|---|---|---|---|---|
| **High Speed Composite Flat Idlers** | | | | | | | | |
| 34-050 | 2 | 1-7/8 | 3/4 | 1 | .669* | None | Composite | |
| 34-051 | 2-1/8 | 1-7/8 | 1/2 | 3/4 | .669* | None | Composite | |
| 34-052 | 2-9/16 | 2-1/4 | 3/4 | 7/8 | .669* | None | Composite | |
| 34-053 | 3-1/16 | 2-3/4 | 7/8 | 1 | .669* | None | Composite | |
| 34-055 | 4 | 3-1/8 | 3/4 | 1-1/8 | .669* | None | Composite | |
| 34-056 | 4-5/8 | 4 | 3/4 | 1 | .669* | None | Composite | |
| 34-057 | 4-5/8 | 4 | 1 | 1-3/16 | .669* | None | Composite | |
| 34-058 | 4-3/4 | 4 | 7/8 | 1-3/8 | .669* | None | Composite | |
| **High Speed Composite V Idlers** | | | | | | | | |
| 34-060 | 2 | n/a | n/a | 5/8 | .669* | None | Composite | |
| 34-061 | 2-1/2 | n/a | n/a | 3/4 | .669* | None | Composite | |
| 34-062 | 3 | n/a | n/a | 3/4 | .669* | None | Composite | |
| 34-063 | 3-1/2 | n/a | n/a | 3/4 | .669* | None | Composite | |
| 34-064 | 4 | n/a | n/a | 7/8 | .669* | None | Composite | |

* Use Reducer Bushings Listed Below

## Reducer Bushings (for High Speed Idlers)

| OREGON | Bore: Size | OD | Product Code |
|---|---|---|---|
| 78-101 | 3/8" ID, flush | .669 | |
| 78-103 | 3/8" ID, 3/8" offset | .669 | |
| 78-100 | 1/2" ID, flush | .669 | |
| 78-102 | 1/2" ID, 1/4" offset | .669 | |
| 78-104 | 3/8" ID, offset | .669 | |
| 78-105-0 | 3/8" ID, 3/8" offset | .625 | |
| 78-106-0 | 3/8" ID, flush | .625 | |

78-101 78-103 78-102 78-104
78-106 78-105 78-107

P

# Pulleys

## OEM Replacement Idlers

| OREGON | Replaces | Description | Product Code |
|---|---|---|---|
| **34-013** | AMF 13469<br>Noma 46476<br>Noma 52694 | **Flat Idler Pulley**<br>OD: 4", flat OD: 3-1/8"<br>Flat width: 3/4", overall width: 1-1/2"<br>Bore: 3/8" | |
| **34-016** | AMF 64761 | **Flat Idler Pulley**<br>For clutch pulley, transmission<br>OD: 3-3/4", flat OD: 3-1/8"<br>Flat width: 3/4", overall width: 1"<br>Bore: 3/8" | |
| **34-046** | AYP 173438<br>AYP 104360X<br>AYP 131494 | **Flat Idler Pulley**<br>For drive belt & mower deck on many<br>12 through 22 HP front engine tractors<br>OD: 3-7/8", flat OD: 3-1/16", flat width: 3/4"<br>Overall width: 1-3/32", bore: 3/8" | |
| **78-043** | AYP/Roper 105313X<br>AYP/Roper 72215<br>AYP/Roper 5375 | **Flat Idler Pulley**<br>For clutch pulley, transmission drive tension<br>OD: 4-1/4" , flat OD: 3-3/4", flat width: 7/8"<br>Overall width: 1-5/16", bore: 3/8" | |
| **34-049** | AYP 139245 | **"V" Idler Pulley**<br>For 50" deck on 20 & 22 HP front<br>engine tractors<br>OD: 3-1/2", width: 3/4", bore: 3/8" | |
| **78-054** | AYP 173437 | **Flat Idler Pulley**<br>OD: 3-3/4", flat OD: 2-7/8", flat width: 1"<br>Overall width: 1-3/8", ID: 3/8", offset: 3/8" | |
| **78-053** | AYP 173901 | **Flat Idler Pulley**<br>OD: 4-5/16", flat OD: 3-1/2", flat width: 1"<br>Overall width: 1-3/8", ID: 3/8", offset: 3/8" | |
| **78-052** | AYP 175820 | **Flat Idler Pulley**<br>OD: 4-1/2", flat OD: 3-5/8", flat width: 5/8"<br>Overall width: 1", ID: 3/8", offset: 1/4" | |
| **78-051** | AYP 177284 | **Flat Idler Pulley**<br>OD: 5-1/2", flat OD: 4-3/4", flat width: 1-3/16"<br>Overall width: 1-9/16", ID: 3/8", offset: 11/16" | |

P

## OEM Replacement Idlers

| OREGON | Replaces | Description | Product Code |
|---|---|---|---|
| **78-013** | AYP 177968 | **Flat Idler Pulley**<br>OD: 4", flat OD: 3-1/16"<br>Flat width: 1", bore: 3/8", offset: 1/8" | |
| **78-056** | 532179114<br>179114 | **Flat Idler Pulley**<br>OD: 3-1/2", flat OD: 3", flat width: 3/4"<br>Overall width: 1", bore: 3/8", offset: 1-3/16"<br>Composite material | |
| **34-901** | AYP 197379 | **Flat Idler Pulley** - NEW<br>Fits Craftsman 944, 917<br>Poulan PB19546LT<br>Outer diameter: 5-3/8", inner diameter: 3/8", height: 1-5/8" | |
| **34-903** | AYP 532194327 | **Flat Idler Pulley** - NEW<br>Fits: AYPC20H42YT, PB19542LT, PB19546LT, PB19H42LT, PB195H46YT, PB19H42YT, PB20H42LT, PB20H42YT, PB20H46LT, PB22H42YT, PB22H46YT, and PB22H48YT<br>Outer diameter: 3-1/2", inner diameter: 3/8", height: 1" | |
| **34-904** | AYP 539-132728 | **Flat Idler Pulley** - NEW<br>Fits Husqvarna CZ Series, RZ Series, & RZ4623<br>OD: 5-7/8", ID: 11/16", height: 1-59/64" | |
| **34-318** | AYP 146763<br>AYP 146763 | **Idler Pulley** - NEW<br>OD: 4-1/4", ID: 3/8", height: 11/16" | |
| **34-902** | AYP 194326<br>AYP 532194326 | **"V" Idler Pulley** - NEW<br>Fits AYP C20H42YT<br>Outer diameter: 3-1/2", inner diameter: 5/8" | |
| **78-014** | AYP 189993<br>AYP 184058 | **"V" Idler Pulley**<br>For 5/8" belt<br>OD: 4-1/2", bore: 3/8", offset: 1/8" | |
| **34-905** | AYP 539113962 | **Pulley-Spindle** - NEW<br>Fits Husqvarna EZ, RZ, Z<br>Poulan PRO 461ZX<br>OD: 5-1/2", ID: 12 pt. hex | |
| **78-020** | Bobcat 38184-2 | **Flat Idler Pulley**<br>OD: 4", bore: 3/8"<br>Width: 1-1/2"<br>No flange | |

# Pulleys

## OEM Replacement Idlers

| OREGON | Replaces | Description | Product Code | |
|---|---|---|---|---|
| **78-111** | Bobcat 38297 | **Flat Idler Pulley**<br>For XM series mowers<br>OD: 5-3/4", flat OD: 5", flat width: 1-1/16"<br>Overall width: 1-1/2", bore: 3/8" | | |
| **78-116** | Bobcat 128169 | **Flat Idler Pulley**<br>Fits model 723D, Frontline 63" side discharge<br>OD: 6-1/4", flat OD: 5-1/2", flat width: 1"<br>Overall width: 1-1/8", bore: 1/2", offset: 5/16" | | |
| **78-031** | Bobcat 38010-2A<br>Bunton PAL0368A<br>John Deere PT8649<br>Snapper Kees 76520 | **Flat Idler Pulley**<br>OD: 3-1/4", flat OD: 2-3/4", flat width: 7/8"<br>Overall width: 1", bore: 3/8", offset: 3/16" | | |
| **34-007** | Bobcat 38010-1A<br>Gravely 21060<br>Scag 48068<br>Snapper 7-6688 | **Flat Idler Pulley**<br>OD: 4-1/2", flat OD: 4", flat width: 3/4"<br>Overall width: 1", bore: 3/8", offset: 3/16" | | |
| **34-209** | Cub Cadet 00030782 | **Flat Idler Pulley**<br>Fits Z-Force mower, pump drive belt<br>OD: 3-3/8", flat OD: 2-11/16", flat width: 7/8"<br>Overall width: 1-1/16", bore: 3/8", offset: 3/16" | | |
| **34-201** | Cub Cadet 01004101 | **Flat Idler Pulley**<br>Fits Z-Force mower<br>For PTO drive belt<br>OD: 4-7/8", flat OD: 4", flat width: 3/4"<br>Overall width: 1-1/8", bore: 3/8", offset: 1/8" | | |
| **78-046** | Cub Cadet 01004081 | **Flat Idler Pulley**<br>OD: 4-7/8", flat dia.: 4", flat width: 3/4"<br>Overall width: 1", bore: 3/8", offset: 1/4" | | |
| **34-205** | Cub Cadet 756-0542 | **Flat Idler Pulley**<br>Fits Z-Force mowers<br>For spindle drive belt<br>OD: 4", flat OD: 3-1/2", flat width: 7/8"<br>Overall width: 1-1/4", bore: 3/8", offset: 1/8" | | 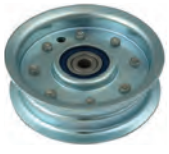 |
| **34-206** | Cub Cadet 756-3062 | **Flat Idler Pulley**<br>Fits RTZ 50 deck<br>For spindle drive belt<br>OD: 5-3/16", flat OD: 5", flat width: 1-1/4"<br>Overall width: 1-7/16", bore: 3/8", offset: 1/16" | | |

P

| OREGON | Replaces | Description | Product Code |
|---|---|---|---|

## OEM Replacement Idlers

| | | | |
|---|---|---|---|
| **34-308** | Cub Cadet 756-3005 | **Flat Idler Pulley** - NEW<br>Fits Exmark Vantage S series mowers; Toro commercial walk-behinds with floating decks; Grandstand mowers<br>OD: 4-3/8", ID: 3/8", height: 7/8" | |
| **34-066** | Cub Cadet 956-3045<br>Cub Cadet 756-3045 | **"V" Idler Pulley**<br>Fits some GT, GTX, LGT, LGTX, RZT, & SLTX series models (2009–2013)<br>OD: 5", width: 1-1/16", bore: 3/8", offset: 1/16" | |
| **78-121** | Bunton PL8540A<br>Bunton 483025 | **"V" Idler Pulley**<br>For 61" & 71" cut, hydro rider commercial mowers<br>OD: 4-7/8", width: 15/16", bore: 3/8", offset: 3/16" | |
| **78-009** | Dixie Chopper 30224 | **Flat Idler Pulley**<br>For 42", 50", 60", & 72" decks<br>OD: 4-3/4", bore: 1/2" | |
| **78-010** | Dixie Chopper 30234 | **"V" Idler Pulley**<br>OD: 4-3/8", bore: 5/8", width: 1" overall<br>For 5/8" V belt | |
| **78-023** | Excel 781385 | **Flat Idler Pulley**<br>Fits 44", 52", 60", & 72" Mini-Z & Super-Z models<br>OD: 6-3/4", flat OD: 6", flat width: 1-1/8", bore: .669" | |
| **78-022** | Excel 781856 | **Flat Idler Pulley**<br>Fits 44", 52", 60", & 72" Mini-Z & Super-Z models<br>OD: 5-1/2", flat OD: 5", flat width: 1", bore: .669"<br>1" flat width: .669" bore | |
| **78-026** | Excel 784504 | **Flat Idler Pulley**<br>Fits Fast Trak models<br>OD: 5-7/8", flat OD: 5", flat width: 1-1/4"<br>width: 1-1/2", bore: .669" | |
| **78-011** | Exmark 633109 | **Flat Idler Pulley**<br>OD: 6-3/4", flat width: 3/4", overall width: 1-3/16"<br>bore: 17 mm | |
| **34-301** | Exmark 116-9639 | **Flat Idler Pulley** - NEW<br>Fits Exmark Lazer Z, Exmark 109-8590 & 116-9639<br>OD: 8-3/4", ID: 11/16", width: 1-5/8" | |

# Pulleys

| OREGON | Replaces | Description | Product Code |
|---|---|---|---|

## OEM Replacement Idlers

| | | | |
|---|---|---|---|
| **34-302** | Exmark 116-9639 | **Flat Idler Pulley** - NEW<br>Fits Exmark Metro, Quest, Viking, Lazer Z & Turf Tracer; Toro TimeCutter ZX, Z, ZX440, ZX480, & ZX525; Titan Z4800, Z5200, ZX5400, ZX5450, ZX6000, ZX6030, & ZX605<br>OD: 4-7/8", ID: 11/16", height: 3/4" | 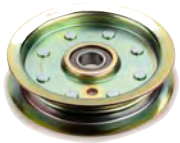 |
| **34-308** | Exmark 93-1622 | **Flat Idler Pulley** - NEW<br>Fits Exmark Vantage S series mowers<br>OD: 4-3/8", ID: 3/8", height: 7/8" | |
| **34-309** | Exmark 1-633109<br>Exmark 116-4667<br>Exmark 1164667<br>Exmark 126-7685<br>Exmark 1267685<br>Husqvarna 539102610 | **Flat Idler Pulley** - NEW<br>Fits Exmark Lazer Z and Lazer XP with 60" and 72" deck; Toro 60" and 72" Z 500's Z Master, 74260 Z 597 with 60"" and 72" deck<br>OD: 6-3/4", ID: 11/16", height: 1-1/8" | |
| **34-313** | Exmark 126-9187<br>Exmark 116-4665<br>Exmark 126-9187 | **Flat Idler Pulley** - NEW<br>Fits Exmark Lazer Z<br>OD: 5-3/4", ID: 11/16", width: 1-1/2" | |
| **78-005** | Exmark 603805 | **"V" Idler Pulley**<br>For 1/2" belt<br>OD: 5", width: 1-1/8", bore: .669" | 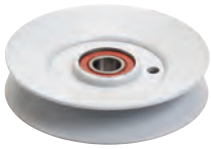 |
| **78-006** | Exmark 613098 | **Flat Idler Pulley**<br>OD: 5-1/2", flat OD: 5", flat width: 1"<br>Overall width: 1-5/16", bore: .669" | |
| **78-021** | Grasshopper 393225 | **Flat Idler Pulley**<br>OD: 4-5/8", flat OD: 4", flat width: 3/4"<br>ID: 1/2" flush | |
| **78-045** | Grasshopper 393312 | **"V" Idler Pulley**<br>For 1/2" belt<br>OD: 2-1/2"<br>Composite material | |
| **34-908** | Hustler 786848<br>Husqvarna 532196104 | **Flat Idler Pulley** - NEW<br>Fits 42", 48", and 54" riders<br>Outer diameter: 5-3/8", center hub: .456", width: 1-11/16" | |
| **34-906** | Hustler 786848 | **Flat Idler Pulley** - NEW<br>OD: 4", center hub: 5/8" | |

P

| OREGON | Replaces | Description | Product Code |
|---|---|---|---|

## OEM Replacement Idlers

| | | | |
|---|---|---|---|
| **34-902** | Husqvarna 532194326 | **"V" Idler Pulley** - NEW<br>Fits AYP C20H42YT, PB19542LT, PB19546LT, PB19H42LT, PB195H46YT, PB19H42YT, PB20H42LT, PB20H42YT, PB20H46LT, PB22H42YT, PB22H46YT, and PB22H48YT<br>OD: 3-1/2", ID: 5/8" | |
| **78-025** | John Deere AM106627 | **Flat Idler Pulley**<br>Fits G-100 tractor with 54" deck<br>OD: 5-1/2", flat dia.: 5", flat width: 1"<br>Overall width: 1-3/8", bore: .669" | |
| **78-112** | John Deere AM107468<br>John Deere AM37442<br>John Deere AM35862<br>John Deere AM37249 | **Flat Idler Pulley**<br>For 38", 39", 47", & 48" deck<br>OD: 4-3/8", flat dia.: 4-1/8", flat width: 3/4"<br>Overall width: 1", bore: .669" | |
| **78-113** | John Deere AM38171<br>John Deere AM103542 | **"V" Idler Pulley**<br>Heavy-duty, welded seam<br>For 5/8" belt, commercial front mount 50, 60, & 72 decks<br>Fits mule drive on 140, 300, 316, 317, & 318 series, primary mower drive on 110, 112, & 200 series, 38" 2-blade mower deck, & 41", 46", 48", 50", & 60" decks<br>OD: 4-1/2", width: 13/16", ID: 3/8" offset | 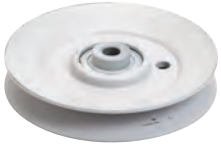 |
| **78-114** | John Deere AM103018<br>MTD 756-0515 | **Flat Idler Pulley**<br>Fits S80, S82, & 68 riders, & 100 series LT, & MTD transmission pulley on the 700 series 32" side dischage deck idler for 5/8" belt<br>OD: 3-3/4", flat OD: 3-1/4", ID: 3/8" offset | |
| **78-131** | John Deere AM118447 | **"V" Idler Pulley**<br>OD: 3-11/16" flange width: 13/16"<br>ID .669", offset: 1/4" | |
| **78-130** | John Deere AM121970 | **Flat Idler Pulley**<br>OD: 3-3/16" flat OD: 2-5/8" flat width: 3/4"<br>Overall width: 1", ID: 3/8", offset: 3/8" | |
| **78-134** | John Deere AM124346 | **Flat Idler Pulley**<br>OD: 3-13/16", flat OD: 3-1/8", flat width: 3/4"<br>Overall width: 1-1/8", ID: 3/8", offset: 3/8" | |
| **78-128** | John Deere AM132764 | **Flat Idler Pulley**<br>OD: 3-1/2", flat OD: 2-5/8", flat width: 3/4"<br>Overall width: 1-3/16", ID: 5/16", offset: 3/8" | |

# Pulleys

## OEM Replacement Idlers

| OREGON | Replaces | Description | Product Code | |
|---|---|---|---|---|
| **34-100** | John Deere AM134501 | **Flat Idler Pulley**<br>Fits X300 mowers<br>For traction drive belt<br>OD: 3-7/16", flat OD: 3", flat width: 3/4"<br>Overall width: 7/8", bore: 5/16", offset: 5/8" | | |
| **34-103** | John Deere AM135526 | **Flat Idler Pulley**<br>Fits X300 mowers<br>For spindle drive belt<br>OD: 5-1/4", flat OD: 4-1/2", flat width: 5/8"<br>Overall width: 1-3/16", bore: .669" | | |
| **34-104** | John Deere AM135773 | **Flat Idler Pulley**<br>Fits X300 mowers<br>For spindle drive belt<br>OD: 3-13/16", flat OD: 3", flat width: 1"<br>Overall width: 1-3/16", bore: 3/8", offset: 1/16" | | |
| **34-106** | John Deere AM136357 | **"V" Idler Pulley**<br>Fits X300 mowers<br>For spindle drive belt<br>OD: 5", overall width: 7/8", bore: .669" | | |
| **34-107** | John Deere AM136367 | **"V" Idler Pulley**<br>Fits X300 mowers<br>For spindle drive belt<br>OD: 5", overall width: 7/8", bore: 3/8" | | |
| **34-102** | John Deere GX20286 | **"V" Idler Pulley**<br>Fits 100 series<br>For traction drive belt<br>OD: 2-13/16", overall width: 5/8", bore: .669 | | |
| **78-129** | John Deere GX20287 | **Flat Idler Pulley**<br>OD: 3-3/8", flat OD: 2-3/4", flat width: 3/4"<br>Overall width: 1", ID .669", offset: none | | |
| **78-132** | John Deere GY00054<br>John Deere AM146880 | **Flat Idler Pulley**<br>OD: 3-1/2" flat OD: 2-3/4" flat width: 3/4"<br>Overall width: 1-1/8", ID: 1/4", offset: 3/8" | | |
| **78-118-0** | John Deere GY20067 | **Flat Idler Pulley**<br>Fits L-100, L-110, & L-120 series tractors<br>For 42" & 48" decks<br>Flat OD: 2-5/8", flat width: 7/8"<br>Overall width: 1-3/16", bore: .669" | | |

## OEM Replacement Idlers

| OREGON | Replaces | Description | Product Code |
|---|---|---|---|
| **78-133** | John Deere GY20110 | **Flat Idler Pulley**<br>OD: 5-1/8", flat OD: 4-1/2", flat width 1"<br>Overall width: 1-1/2", ID .669", offset: none | |
| **34-109** | John Deere GY20629 | **Flat idler Pulley**<br>Fits 100 series<br>For spindle drive belt<br>OD: 5-3/16", flat OD: 4-1/2", flat width: 1-1/4"<br>Overall width: 1-5/8", bore: .669" | 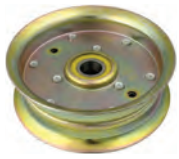 |
| **78-019** | MTD 756-0116 | **"V" Idler Pulley**<br>For 1/2" belt<br>OD: 3", bore: 3/8", offset: 1/4" offset | |
| **34-010** | MTD 756-0217 | **Flat Idler Pulley**<br>Fits traction drive idler for 600 series<br>OD: 3-1/8", flat OD: 2-3/4", flat width: 7/8"<br>Bore: 3/8", offset: 1/16" | |
| **78-050** | MTD 756-0365 | **Flat Idler Pulley**<br>For 46" deck, 44" rear discharge deck series 600, 700, & 800 deck H (1985–1994)<br>OD: 4-1/8", flat OD: 3-1/2", flat width: 7/8"<br>Overall width: 1-1/16", bore: 3/8", offset: 3/32" | |
| **34-014** | MTD 756-0437 | **Flat Idler Pulley**<br>Fits traction drive idler for 500, 600, & 700 series (1984–1995)<br>OD: 4", flat OD: 3-1/8", flat width: 3/4"<br>Overall width: 1-3/16", bore: 3/8" | |
| **34-041** | MTD 756-0627 | **Flat Idler Pulley**<br>Fits deck idler 46" for 600 & 800 series (1993 & newer)<br>Flange OD: 4-1/8", OD: 3-1/2", flat width: 7/8"<br>Overall width: 1-1/8", bore: 3/8", offset: 1/16" | |
| **78-028** | MTD 756-0981A<br>MTD 956-0981A<br>MTD 756-0981B<br>MTD 756-0981<br>MTD 756-04224<br>MTD 956-04224 | **Flat Idler Pulley**<br>OD: 3-1/8", flat dia.: 2-3/4", flat width: 7/8"<br>Overall width 1-1/8", bore: 3/8", offset: 1/16" | |
| **78-029** | MTD 756-1208 | **"V" Idler Pulley**<br>For 1/2" belt, electric PTO equipped 42" cut mower<br>OD: 4", bore: 3/8", offset: 3/16", top width: 11/16" | |

P

# Pulleys

| OREGON | Replaces | Description | Product Code | |
|---|---|---|---|---|

## OEM Replacement Idlers

| | | | | |
|---|---|---|---|---|
| **78-098** | MTD 756-1229 | **Flat Idler Pulley**<br>OD: 4-7/8", flat dia.: 4-1/16", flat width: 3/4"<br>Overall width: 1-1/8", bore: 3/8", offset: 3/32" | | |
| **78-047** | MTD 756-3105 | **Flat Idler Pulley**<br>For 54" cut decks<br>OD: 5-3/4", flat OD: 5", flat width: 1"<br>Overall width: 1-1/2", bore: 3/8" | | |
| **78-065** | MTD 956-04129B<br>MTD 956-04129<br>MTD 756-04129 | **Flat Idler Pulley**<br>OD: 4-7/8", flat OD: 4-1/4", flat width: 3/4"<br>Overall width: 1-1/8", bore: 3/8", offset: 1/16" | | |
| **34-066** | Cub Cadet 956-3045<br>Cub Cadet 756-3045 | **"V" Idler pulley**<br>OD: 5", width: 1-1/16", bore: 3/8" offset: 1/16"<br>For PTO drive on some GT series<br>tractors and tanks (2009–2013) | | |
| **78-027** | Murray 421409<br>Murray 91179 | **Flat Idler Pulley**<br>For engine to transmission<br>OD: 3-1/4", flat OD: 2-3/4", flat width: 7/8"<br>Overall width: 1", flush bore: 1/2"<br>Steel material | | |
| **34-004** | Murray 490118<br>Murray 90118 | **Flat Idler Pulley**<br>OD: 4-7/16", flat OD: 4", flat width: 1"<br>ID: 1/2", overall width: 1-3/16" | | |
| **34-822** | Murray 91801<br>Murray 774089 | **Flat Idler Pulley**<br>Fits 36", 38", 40", & 48" lawn tractor<br>OD: 4-3/4", flat OD: 4", flat width: 7/8"<br>Bore: 1/2", offset: none<br>Composite material | | |
| **34-824** | Murray 91178<br>Murray 420613 | **"V" Idler Pulley**<br>Fits 36" lawn tractor & 30" rider<br>For "A" belt<br>OD: 3", width: 11/16", bore: .625" (5/8"), offset: none<br>Composite material | | |
| **78-021** | Murray 91590<br>Murray 423238 | **Flat Idler Pulley**<br>OD: 4-5/8", flat OD: 4", flat width: 3/4"<br>Bore: 1/2", offset: none | | |

| OREGON | Replaces | Description | Product Code |
|---|---|---|---|

## OEM Replacement Idlers

| | | | |
|---|---|---|---|
| **34-826** | Murray 91179<br>Murray 421409 | **Flat Idler Pulley**<br>For transmission drive tension/clutch, 38", 40", & 46" lawn tractors<br>OD: 3-11/32", flat OD: 3-1/4", flat width: 7/8"<br>Overall width: 1", bore: 1/2", offset: none | |
| **78-048** | Murray 095068MA | **Idler Pulley**<br>Fits primary deck drive belt on 52100, 52101, 521613, 52161, 52370, 52431, 52461, & 52607 lawn and garden tractors<br>OD: 6", flat OD: 5-1/8“, flat width: 1-1/8“<br>Overall width: 1-7/16“, bore: 3/8“, offset: none | |
| **78-049** | Murray 690549MA | **Idler Pulley**<br>For primary deck drive belt on many 46" and 52" decks (1999–2009)<br>OD: 4-5/8", flat OD: 4", flat width: 3/4"<br>Overall width: 15/16", bore: .669", offset: none | |
| **78-055** | Murray 690387MA | **Idler Pulley**<br>For belt on many 38"–46" decks<br>OD: 4-3/4", flat OD: 4", flat width: 3/4"<br>Overall width: 1-5/16", bore: .669", offset: none | |
| **34-820** | Noma 310326<br>Murray 300841 | **Flat Idler Pulley**<br>Belt tension idler<br>For 38" & 39" tractor decks<br>OD: 4-3/4", flat OD: 4", flat width: 1"<br>Overall width: 1-5/15", bore: 3/8", offset: 1/8"<br>Composite material | |
| **78-007** | Scag 48473 | **Flat Idler Pulley**<br>OD: 5", flat OD: 4-1/2", flat width: 1"<br>Overall width: 1-1/8", bore: 3/8", offset: 3/8" | |
| **78-300** | Scag 48269<br>Jacobsen 182519 | **Flat Idler Pulley**<br>OD: 5-3/4", flat OD: 5", flat width: 1-1/16"<br>Overall width: 1-1/2", bore: 3/8", offset: 1/4" | |
| **78-110** | Snapper 1-8585<br>Snapper 23966 | **Flat Idler Pulley**<br>OD: 4-7/8", flat OD: 4-1/16", flat width: 3/4"<br>Overall width: 1-1/8", bore: 3/8", offset: 1/16" | |
| **34-021** | Snapper 1-2124 | **Flat Idler Pulley**<br>For self-propelled mowers, steel and aluminum deck<br>OD: 2-1/8", flat OD: 1-7/8", flat width: 1/2",<br>Overall width: 21/32", bore: 1/4", offset: 3/16" | |

# Pulleys

| OREGON | Replaces | Description | Product Code |
|---|---|---|---|

## OEM Replacement Idlers

| | | | |
|---|---|---|---|
| **34-308** | Toro 112895<br>Toro 93-1622<br>Wright Mfg. 71460006 | **Flat Idler Pulley** - NEW<br>For Exmark Vantage S series mowers;<br>Toro commercial walk-behinds with floating decks;<br>Grandstand mowers<br>OD: 4-3/8", ID: 3/8", height: 7/8" | |
| **78-044-1** | Toro 36-3220<br>Zipper 100-1015<br>Ingersoll G900-2518<br>Ingersoll C37891 | **Flat Idler Pulley**<br>For 37" deck<br>OD: 4-1/2", flat OD: 4", flat width: 1"<br>Overall width: 1-1/8", bore" 3/8", offset: 1/64" | |
| **34-039** | Toro 104975 | **Flat Idler Pulley**<br>Fits model 300, 400, & 500 garden tractors<br>OD: 4-1/8", flat OD: 3-3/8", flat width: 3/4"<br>Overall width: 1-3/16", bore: 3/4", offset: none | |
| **34-032** | Toro 104974<br>Toro 92-7103 | **"V" Idler Pulley**<br>Fits garden tractor models 300, 400, & 500<br>For 5/8" belt<br>OD: 4-1/4", width: 3/4", bore: 3/4", offset: none | |
| **78-033** | Toro 110-6775 | **Flat Idler Pulley**<br>For hydro drive on TimeCutter mowers<br>OD: 3-1/2", flat OD: 3", flat width: 3/4"<br>Overall width: 7/8", bore: .669", offset: none | |
| **34-210** | Toro 117-5299<br>Toro 46-5650<br>Exmark 117-5299<br>Exmark 46-5650 | **"V" Idler Pulley**<br>Fits 21" heavy-duty recycler/rear bagger mower models<br>22177TE, 22188, 22188TE, 22196, & 22198 (2010–2013)<br>For 1/2" belt<br>OD: 2-5/8", width: 5/8", bore: 7/16", offset: 0" | |

## OEM Replacement Drive Pulleys

| | | | |
|---|---|---|---|
| **44-302** | AYP 136572 | **Spindle Drive Pulley**<br>For 44" decks<br>OD: 5", ID: double hex .640" | |
| **44-370** | AYP 153535<br>AYP 129861<br>AYP173436<br>AYP177865 | **Spindle Drive Pulley**<br>Fits Oregon® 82-225, 82-014, 82-510,<br>82-015, & 82-026 spindles<br>For 42", 44", 48", 50", & 54" decks<br>OD: 5", ID: 12-tooth spline | |
| **44-371** | AYP 153532<br>AYP 129206<br>AYP 173435 | **Spindle Drive Pulley**<br>Fits Oregon 82-225, 82-014, 82-510, 82-015, & 82-026 spindles<br>For 5/8" belt, 38" decks<br>OD: 4-3/4", ID: 12 tooth spline | |

P

| OREGON | Replaces | Description | Product Code |
|---|---|---|---|

## OEM Replacement Drive Pulleys

| | | | |
|---|---|---|---|
| **78-062** | HOP 195945 | **Spindle Drive Pulley**<br>For 42" & 46" mower decks with 2 blades (2006 & newer)<br>OD: 6-1/4", ID: 12-tooth spline | |
| **78-640** | Bobcat 31011B | **Cast Iron Spindle Pulley**<br>For 5/8" belt<br>OD: 5-3/4", bore: 1", keyway: 1/4"<br>Hub length: 1-1/2" | |
| **78-641** | Bobcat 38456<br>Bobcat 38018N | **Cast Iron Jackshaft Pulley**<br>For 5/8" belt<br>OD: 3-1/2", bore: 5/8", keyway: 3/16"<br>Hub length: 1-1/2" | |
| **78-643** | Bobcat 38022B | **Cast Iron Transmission Pulley**<br>For 5/8" belt<br>OD: 5", bore: 5/8", keyway: 3/16"<br>Hub length: 1-3/16" | |
| **78-649** | Bobcat 31008B | **Cast Iron Spindle Pulley**<br>For 48" cut, 5/8" belt<br>OD: 5-3/4", hub length: 1", bore: with set screws<br>Keyway: 1/4" | |
| **78-650** | Bobcat 101002 | **Cast Iron Pulley**<br>For 5/8" belt<br>OD: 3-1/2", bore: 1", keyway: 1/4"<br>Hub length: 1-7/16" | |
| **78-651** | Bobcat 38460<br>Bobcat 38214 | **Cast Iron Pulley**<br>For 1/2" belt<br>OD: 2-3/4", bore: 1", keyway: 1/4"<br>Hub length: 1-1/16" | |
| **78-678** | Bobcat 38183 | **Cast Iron Jackshaft Pulley**<br>For 48" cut, double groove with hub, A section<br>Dia.: 3-7/16", bore: 5/8" bore<br>Hub length: 1-27/32", keyway: 3/16" | |
| **78-644** | Bunton PL0622<br>John Deere PT8755 | **Cast Iron Spindle Pulley**<br>For 1/2" belt<br>OD: 4", bore: 25 mm, keyway: 1/4"<br>hub length: 1-5/32" | |

P

# Pulleys

| OREGON | Replaces | Description | Product Code |
|---|---|---|---|

## OEM Replacement Drive Pulleys

| | | | |
|---|---|---|---|
| **78-646** | Bunton PL1246<br>John Deere PT8778 | **Cast Iron Engine Pulley**<br>For 5/8" belt<br>OD: 4", bore: 1", keyway 1/4",<br>hub length: 1-5/32" | 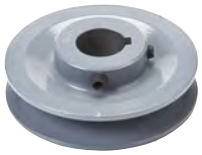 |
| **78-642** | Encore 363216<br>Scag 48127<br>Ferris 1520814<br>Jacobson 182237<br>Scag 482744 | **Cast Iron Drive Pulley**<br>Fits 32", 36", 48", & 61" decks, taper lock single pulley<br>For A & B belts<br>OD: 5-3/4"<br>Use with Oregon® 78-004 drive pulley bushing | |
| **44-504** | Exmark 109-0914 | **Spindle Drive Pulley**<br>Fits models with 66" deck: Lazer XS air cooled (S/N 850,000 & up), Lazer Z AC, Lazer Z XS Air Cooled, Lazer Z XS Diesel, Lazer Z XS Liquid Cooled (S/N 600,000 & up), & Lazer Z HP (S/N 670,000 & up)<br>OD: 6.75", ID: 1-3/16", width: 1-1/8" | |
| **44-503** | Exmark 109-0929 | **Spindle Drive Pulley**<br>Fits models with 72" deck Lazer XS Air Cooled (S/N 850,000 & up), Lazer Z AC (S/N 720,000 & up), Lazer Z HP (S/N 600,000 – 669,999), Lazer Z XS Air Cooled, Lazer Z XS Diesel, Lazer Z XS Liquid Cooled (S/N 600,000 & up), LZD25KD725 (S/N 920,000 & up), & LZDS902K725 (S/N 312,000,000 & up)<br>OD: 7.25", ID: 1-3/16", width: 1-1/8" | |
| **44-506** | Exmark 109-1023 | **Spindle Drive Pulley**<br>Fits models with 60" deck: Lazer XS Air Cooled (S/N 850,000 & up), Lazer Z Air Cooled, Lazer Z XS Air Cooled (S/N 720,000 & up), Lazer Z HP (S/N 600,000 & up), Lazer Z XS Diesel, Lazer Z XS Liquid Cooled (S/N 670,000 & Up), LZD25KD605 (S/N 920,000 & up), & LZDS902K605 (S/N 312,000,000 & up)<br>OD: 6.13", ID: 1-3/16", width: 1-1/8" | |
| **44-501** | Exmark 109-2180 | **Spindle Drive Pulley**<br>Fits models with 72" deck LZDS902K72RD, LZX980EKC726, LZX940KC726, LZX980KC726 (S/N 312,000,000 & up), LZX34KC726, LZX38KC726 (S/N 920,000 & up), & Next Lazer Z Air Cooled (S/N 790,000 & up)<br>OD: 9.00", ID: 1-3/16", width: 1-1/8" | |
| **44-502** | Exmark 109-9511 | **Spindle Drive Pulley**<br>Fits models with 60" deck LZX980KC606, LZDS902K60RD, LZX940EKC606 (S/N 313,000,000 & up), LZS29PKA606, LZX27KC606, LZX29EKC606, LZX29KA606, LZX34KC606, LZX38KC606 (S/N 920,000 & up), & Next Lazer Z Air Cooled (S/N 790,000 & up)<br>OD: 7.25", ID: 1-3/16", width: 1-1/8" | |
| **44-505** | Exmark 116-0185 | **Spindle Drive Pulley**<br>Fits models with 52" deck: LZX24KA526, LZX27KC526 (S/N 920,000 & Up), LZX740EKC526 (S/N 313,000,000 & Up), LZX740KC526 (S/N 312,000,000 & Up), & Next Lazer Z Air Cooled (S/N 790,000 & up)<br>OD: 6.75", ID: 1-3/16", width: 1-1/8" | |

P

| OREGON | Replaces | Description | Product Code |
|---|---|---|---|

## OEM Replacement Drive Pulleys

| | | | |
|---|---|---|---|
| **34-065** | Cub Cadet 956-04216<br>Cub Cadet 756-04216 | **Spindle Drive Pulley**<br>Use with Oregon® 82-403 spindle<br>For 5/8" belt, 50" & 54" decks<br>OD: 5-1/2", spline ID: 5/8" | |
| **44-100** | MTD 756-0486 | **Spindle Drive Pulley**<br>Fits: 600 series tractor, deck E & F, use with Oregon 82-500 (use brake disc Oregon 44-364)<br>For 32" & 36" deep deck (1985–1997), 5" serrated<br>OD: 5-1/8", ID: 3/4" spline | |
| **44-366** | MTD 756-0488<br>MTD 753-0635 | **Engine Pulley**<br>Fits models 660-679<br>Top OD: 3-9/16", bottom OD: 5-1/2"<br>Bore: 1", C-C: 3-1/2", height: 5-5/8" | |
| **44-368** | MTD 756-0556 | **Spindle Drive Pulley**<br>Fits 42" "G" 600 series deck (1990–1996), use with Oregon® 82-500 spindle assembly (use brake disc Oregon 44-364)<br>OD: 5-1/2", ID: 3/4" spline | |
| **44-101** | MTD 756-0603<br>MTD 756-0124<br>MTD 756-0977 | **Double Pulley**<br>Fits Oregon spindles 82-511 & 82-516<br>Top pulley OD: 5", Belt: 5/8"<br>Bottom pulley OD: 5", Belt: 1/2" | |
| **44-369** | MTD 756-0980 | **Spindle Drive Pulley**<br>Use with Oregon 82-513-2 spindle<br>For 42" decks<br>OD: 5-34", Spline ID: 5/8", Belt: 5/8" | |
| **44-365** | MTD 756-0982 | **Engine Pulley**<br>Fits 600 series tractors with variable speed drive<br>Includes spacers<br>Top OD: 3-9/16", bottom OD: 5-9/16", bore: 1" | |

P

# Pulleys

| OREGON | Replaces | Description | Product Code |
|---|---|---|---|

## OEM Replacement Drive Pulleys

| | | | |
|---|---|---|---|
| **44-367** | MTD 756-0983 | **Engine Pulley**<br>Fits 600 series tractors with hydrostatic drive<br>Includes spacers<br>Top OD: 3-9/16", bottom OD: 5-9/16", bore: 1" | |
| **44-103** | MTD 756-1202 | **Double Pulley Assembly w/ Bearings**<br>For 42" decks with 2-belt system<br>Use with Oregon bearing 45-243<br>OD: 5" | |
| **78-066** | MTD 956-1227<br>MTD 756-1227 | **Spindle Drive Pulley**<br>For 42" mower decks (2006 & newer)<br>OD: 6-1/4", spline ID: 5/8"<br>Belt: 5/8" | |
| **44-331** | Murray 94592 | **Spindle Drive Pulley**<br>For 46" for 46" cut mowers<br>OD: 5", ID: 5/8" spline, HT: 1" | |
| **44-343** | Murray 92425 | **Spindle Drive Pulley**<br>For 42" deck on front engine tractors<br>OD: 6-1/4", spline bore: 9/16", belt: 5/8" | |
| **44-339** | Murray 94199<br>Murray 494199 | **Spindle Drive Pulley**<br>For 42" deck, fits splined shaft<br>OD: 5-3/8", width: 1/2", spline bore: 9/16" | |
| **44-323** | Murray 20615 | **Spindle Drive Pulley**<br>For 25" & 42" side discharge<br>OD: 4-1/2", bore: 5/8", keyway: 5/32"<br>Use with Oregon® shaft 85-001 | |
| **44-332** | Murray 23739 | **Spindle Drive Pulley**<br>For 36" riders & lawn tractors (1988 & older)<br>OD: 5", bore: 5/8", keyway: 5/32" | |
| **44-340** | Murray 91951<br>Murray 55452<br>Murray 774090 | **Spindle Drive Pulley**<br>Use with Oregon 85-012 jackshaft<br>For 30" cut mowers (1986 & newer)<br>OD: 7-1/4", bore: .600" splined | |

P

| OREGON | Replaces | Description | Product Code |
|---|---|---|---|

## OEM Replacement Drive Pulleys

| | | | |
|---|---|---|---|
| **44-341** | Murray 91769<br>Murray 91943 | **Spindle Drive Pulley**<br>Use with Oregon 85-008 jackshaft<br>For 36", 38", & 40" cut<br>OD: 5-1/4", bore: .600" splined, belt: 1/2" | |
| **44-356** | Murray 90242 | **Spindle Drive Pulley**<br>Use with Oregon 85-006 jackshaft<br>For 30" cut (1984–1986)<br>OD: 7-1/2", bore: 5/8", hub length: 1-1/8"<br>Width: 1-3/8", keyway: 3/16", belt: 1/2" | |
| **44-342** | Murray 92127 | **Spindle Drive Pulley**<br>For outer spindles on 46" deck<br>OD: 5", splined center hole: 9/16"<br>Belt: 5/8" | |
| **78-675** | Power Trim 334 | **Edger Pulley**<br>For 2.2 HP Honda, 2–3 HP Briggs & Stratton<br>OD: 2-1/2", bore: 5/8", keyway: 3/16"<br>Hub length: 1-1/4", belt: 1/2" | |
| **78-676** | Power Trim 307 | **Pulley with Hub**<br>For "A" section belts<br>OD: 2", bore: 5/8"<br>Hub length: 1", keyway: 3/16" | 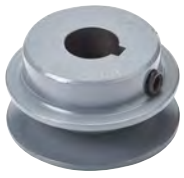 |
| **78-677** | Power Trim 334-1 | **Pulley with Hub**<br>For 3-1/2 HP Honda engines, "A" section belts<br>OD: 2-1/2", bore: 3/4"<br>Hub length: 1-1/4", keyway: 3/16" | 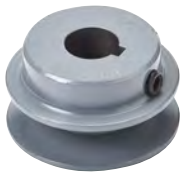 |
| **78-673** | Scag 48199<br>Jacobsen 182186 | **Double Groove Jackshaft Pulley**<br>For "A" section belts<br>OD: 3-1/4", bore: 5/8" | |
| **78-003** | Scag 48926 | **Bushing**<br>For tapered bore pulley, commercial mowers using cast iron housing<br>Use with Oregon® 78-642<br>Bore: 1-1/8" | |

P

# Pulleys

## OEM Replacement Drive Pulleys

| OREGON | Replaces | Description | Product Code |
|---|---|---|---|
| **78-680** | Scag 48200 | **Pulley**<br>Use with Oregon 48-303 drive wheel<br>OD: 8", ID: 2.25"<br>Keyway: 3/16", belt: 5/8" | |
| **44-347** | Snapper 1-0787<br>Snapper 1-8587 | **Spindle Drive Pulley**<br>OD: 6-7/8", ID: 3/4"<br>Hub length: 1" | |
| **78-690** | Snapper 2-1707 | **Drive Pulley**<br>For self-propelled, walk-behind mowers<br>OD: 1-7/8", bore: 7/8", keyway: 5/32" | |
| **44-500** | Snapper 2-4521<br>Snapper 17736<br>Snapper 12140 | **Drive Pulley**<br>Use with Oregon 41-005 shaft<br>For 21" self-propelled, walk-behind mowers, use with poly V-drive belt<br>OD: 2", bore: 3/8", length: 1-1/4", Hex ID: 1/2" | |

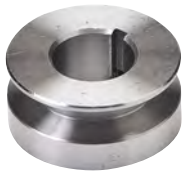

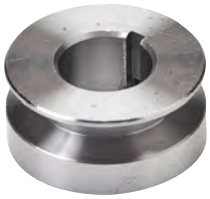

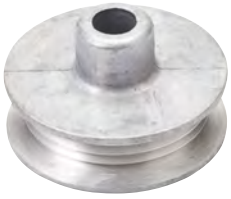

## Steel V-Belt Drive Pulleys

| OREGON | O.D. | Bore | Key Way | Product Code |
|---|---|---|---|---|
| 44-306 | 2" | 5/8" | 3/16" | |
| 44-301 | 2-1/4" | 3/8" | 1/8" | |
| 44-310 | 2-1/2" | 5/8" | 3/16" | |
| 44-312 | 3" | 5/8" | 3/16" | |
| 44-313 | 3" | 3/4" | 3/16" | |
| 44-348 | 3" | 7/8" | 3/16" | |
| 44-351 | 3" | 1" | 1/4" | |
| 44-316 | 3-1/4" | 3/4" | 3/16" | |
| 44-318 | 3-1/2" | 5/8" | 3/16" | |
| 44-319 | 3-1/2" | 3/4" | 3/16" | |
| 44-321 | 4" | 5/8" | 3/16" | |
| 44-322 | 4" | 3/4" | 3/16" | |
| 44-353 | 4" | 1" | 1/4" | |

- Designed for 4-L, 1/2" section v-belts
- Light-weight – more strength per pound
- Machined steel hubs
- Precision broached for true running performance
- Standard 1/8, 3/16, & 1/4 keyways

44-353

P

## Drive Pulleys by Size Chart

| OREGON | OD | ID | Hub Length | Keyway | Type | Belt |
|---|---|---|---|---|---|---|
| 78-690 | 1-7/8" | 7/8" | 7/8" | 5/32" | Steel | 3/8" |
| 44-500 | 2" | 3/8" | 1-1/4" | | Aluminum | Poly "v" |
| 78-676 | 2" | 5/8" | 1" | 3/16" | Iron | A type |
| 44-306 | 2" | 5/8" | 1" | 3/16" | Steel | 1/2" |
| 44-301 | 2-1/4" | 3/8" | 1" | 1/8" | Steel | 1/2" |
| 78-675 | 2-1/2" | 5/8" | 5/8" | 3/16" | Iron | A type |
| 44-310 | 2-1/2" | 5/8" | 1" | 3/16" | Steel | 1/2" |
| 78-677 | 2-1/2" | 3/4" | 5/8" | 3/16" | Iron | A type |
| 78-651 | 2-3/4" | 1" | 1-1/16" | 1/4" | Iron | A type |
| 44-351 | 3" | 1" | 1" | 1/4" | Steel | 1/2" |
| 44-312 | 3" | 5/8" | 1" | 3/16" | Steel | 1/2" |
| 44-313 | 3" | 3/4" | 1" | 3/16" | Steel | 1/2" |
| 44-348 | 3" | 7/8" | 1" | 1/4" | Steel | 1/2" |
| 78-673 | 3-1/4" | 5/8" | 1" | 3/16" | Iron | A type double v |
| 44-316 | 3-1/4" | 3/4" | 1" | 3/16" | Steel | 1/2" |
| 78-678 | 3-7/16" | 5/8" | 1-25/32" | 3/16" | Iron | A type double v |
| 44-318 | 3-1/2" | 5/8" | 1" | | Steel | 1/2" |
| 78-641 | 3-1/2" | 5/8" | 1-1/2" | 1/8" | Iron | B type |
| 78-650 | 3-1/2" | 1" | 1-13/32" | | Iron | B type |
| 44-321 | 4" | 5/8" | 1" | | Steel | 1/2" |
| 44-322 | 4" | 3/4" | 1" | | Steel | 1/2" |
| 78-644 | 4" | 25 mm/.987" | 1-5/32" | | Iron | A type |
| 78-646 | 4" | 1" | 1-1/8" | | Iron | B type |
| 44-353 | 4" | 1" | 1" | | Steel | 1/2" |
| 78-010 | 4-3/8" | 5/8" | | | | B type |
| 44-323 | 4-1/2" | 5/8" | 1" | 5/32" | Steel | 1/2" |
| 44-332 | 5" | 5/8" | 1" | | Steel | 1/2" |
| 78-643 | 5" | 5/8" | 1-5/32" | | Iron | B type |
| 44-302 | 5" | 0.640" spline | | | Steel | B type |
| 44-331 | 5" | 5/8" spine | 1" | | | 1/2" |
| 44-341 | 5-1/4" | 0.6 | 1-1/8" | | Steel | 1/2" |
| 44-342 | 5" | 9/16" spline | | | | 5/8" |
| 44-339 | 5-3/8" | 9/16" spline | 1/8" | | Steel | 1/2" |
| 44-368 | 5-1/2" | 3/4" spline | 2-1/4" | | Steel | 1/2" |
| 78-640 | 5-3/4" | 1" | 1-1/2" | | Iron | B type |
| 78-649 | 5-3/4" | 1" | 1" | | Iron | B type |
| 78-642 | 5-3/4" | "H" taper | 7/8" | | Iron | A & B type |
| 44-343 | 6-1/4" | 9/16" spline | 1/8" | Splined | Steel | 5/8" |
| 44-347 | 6-7/8" | 3/4" | 1" | | Steel | A type |
| 44-340 | 7-1/4" | 0.6 | 1/8" | | Steel | 1/2" |
| 44-356 | 7-1/2" | 5/8" | 1-3/8" | 5/32" | Steel | 1/2" |

Can't find what you're looking for?
Try us online to search the latest products available.

OregonProducts.com

# Seats

| OREGON | Description | Product Code |
|---|---|---|

**73-821** **Premium High-Back Seat – Cordura Fabric**

**Features:** water-resistant cordura fabric, lumbar support (3 positions), adjustable armrests, upper backrest slides, document pouch, forward folding and reclining backrest, accepts operator presence switch
**Applications:** commercial turf, utility vehicles, professional turf, forklifts, skid steers, ground service equipment, construction equipment, utility tractors, row crop, & speciality/industrial tractors

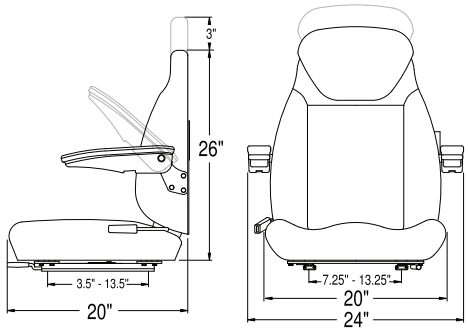

**Bolt Patterns**

| Width | Depth |
|---|---|
| 7" to 13-1/2" | 13" max |

Adjustable, slotted slides

**73-822** **Suspension, Low Profile w/Weight Adjustment**
**Features:** fully-skirted & powder coated
Suspension stroke: 1.5", weight adjustment: 110–265 lbs.
Use with Oregon® 73-821 and many other seats

**Bolt Patterns**

| Width | Depths |
|---|---|
| 10-1/4" | 5-1/4" |
| 10-1/4" | 6-1/2" |
| 10-1/4" | 8-5/8" |
| 10-1/4" | 9-5/8" |
| 10-1/4" | 10-3/4" |
| 10-1/4" | 12" |
| 10-1/4" | 12-3/4" |

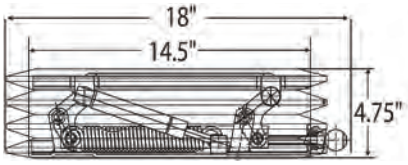


Side View

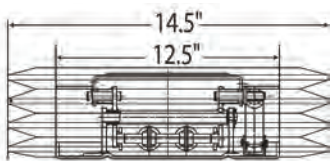


Front View

| OREGON | Replaces | Description | Product Code |
|---|---|---|---|

**73-562-0**

Replaces: Bunton/Bobcat, Jacobsen, Toro, Excel, Exmark, Country Clipper, Ariens, Woods, Gravely, Scag, John Deere BM19828

**Suspension Seat - High Back**
Great, fully adjustable upgrade to smooth a rough ride
Fits many commercial brands
Black polyurethane, low profile seat with mounting brackets
Accepts seat safety switch
Height: 24", depth: 23", width: 23"

**Bolt Pattern**

| Width | Depth |
|---|---|
| 11-1/4" | 11" |

4-bolt mount

S

| OREGON | Replaces | Description | Product Code |
|---|---|---|---|

**73-819** Universal Mount

**Bolt Patterns**

| Width | Depth |
|---|---|
| 8" | Slotted Slide |
| 10-5/8" | Slotted Slide |
| 11-1/4" | Slotted Slide |

Spacing from 1" to 11-1/2"

**Ultra High-Back Tractor Seat**
Integral, black polyurethane seat with moveable arm rests, drain hole & universal mounting
Easy adjusting slide mechanism
Inside bottom slide/slot bolt pattern
Mount on existing rails
Does not accept seat switch
Can replace Oregon® 73-818
Height: 19", depth: 20", width: 17-1/2"

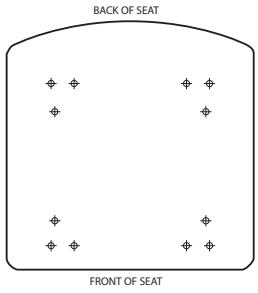

**73-561** Universal Mount

**Bolt Patterns**

| Width | Depth |
|---|---|
| 5-1/4" | 4-1/2" |
| 6" | 5" |
| 7-1/2" | 7" |

1/2" center hole

**High-Back Tractor Seat**
Integral, waterproof, solid black polyurethane seat with drain hole & universal mounting
Can replace Oregon 73-560
Height: 14-1/2", depth: 20", width: 18-3/4"

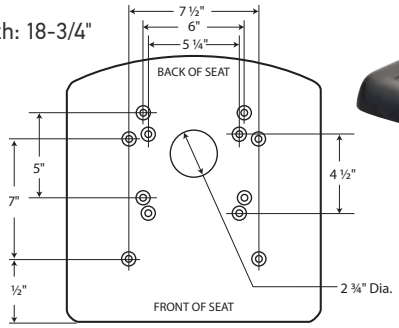

**73-351** Universal Mount

**Bolt Patterns**

| Width | Depth |
|---|---|
| 5-1/4" | 4-1/2" |
| 6" | 5" |
| 7-1/2" | 7" |

1/2" center hole

**Standard-Height Tractor Seat**
Integral, waterproof, solid black polyurethane seat with universal mounting
Can replace Oregon 73-350
Height: 9-3/4", depth: 16-3/4"
Width: 18-3/4"

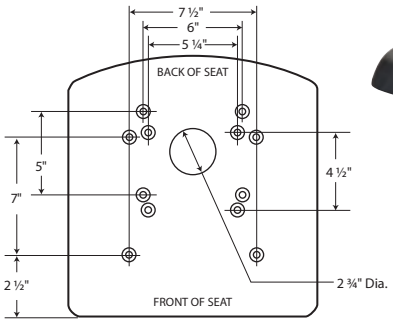

**73-564-0** Universal Mount
John Deere Gator

**Bolt Patterns**

| Width | Depth |
|---|---|
| 7-1/2" | 3" |
| 7-1/2" | 7" |
| 8" | 11-1/2" |
| 8-1/4" | 5" |

**Tractor Seat - Yellow**
For John Deere Gator & others
Height: 19", depth: 20-1/2"
Width: 18"

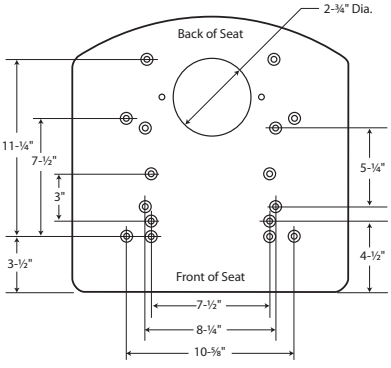

S

# Seats

| OREGON | Replaces | Description | Product Code |
|---|---|---|---|

**73-560**

Replaces: AMF/Noma, Bolens, Gilson, MTD, Murray, Roper

**Bolt Patterns**

| Width | Depth |
|---|---|
| 6" | 5" |
| 7-1/2" | 3" |
| 7-1/2" | 7" |
| 8-1/4" | 5" |
| 11-1/4" | 11" |

**Tractor Seat**
Universal mount fits most brands
All mounting holes are 1/4-20 except the center mount
Center hole thread size 1/2-13
Spring mounts for Bolens, Gilson, MTD, Murray, & Roper
Height: 14", depth: 19.25"
Width: 19.75"

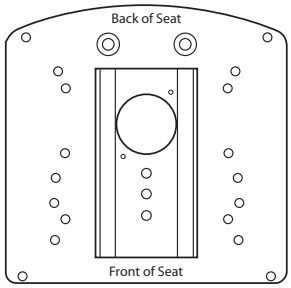

**73-352-0**

Replaces: Universal

**Bolt Pattern**

| Long | Across |
|---|---|
| 11-1/2" | 10-1/2" |

**Universal Seat**
For utility tractors, skid steer loaders, commercial equipment, and others
Universal mounting with easy adjusting slide mechanism
Four bolt mounting on rails
Height: 16", depth: 15", width: 18"

**73-353-0**

Replaces: Universal

**Bolt Pattern**
Universal slot pattern

**Universal Seat**
For utility tractors, skid steer loaders, commercial equipment, and others
Mounting hole for operator presence switch
Height: 18", depth: 17", width: 18"

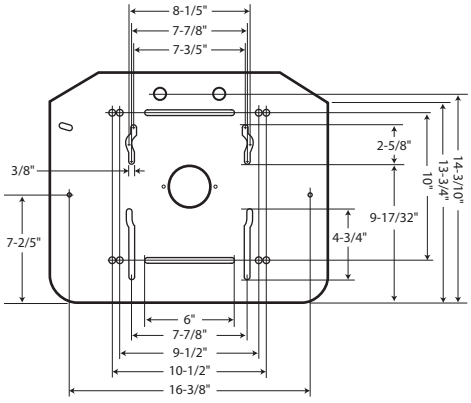


S

| OREGON | Replaces | Description | Product Code |
|---|---|---|---|

# Snow Thrower Parts

## SnoStik™

- U.S. patent pending
- High-impact polypropylene
- Bright red color
- 24" long
- Smooth curved finish
- Built-in hanging hook
- Hand guard
- Secure grip, knurled/ribbed handle
- (25) packaged in display box

| OREGON | Replaces | Description | Product Code |
|---|---|---|---|

## Snostik™ Snow Removal & Safety Tool

| | | | |
|---|---|---|---|
| **73-039** | | **SnoStik**<br>Snow removal and safety tool | |

## Auger Assembly – MTD

| | | | |
|---|---|---|---|
| **73-050** | 984-04027A,<br>984-04027, 984-5485,<br>784-5485,<br>706-15686-00-11<br>684-04027A, 684-04027<br>684-04025A, 684-04025 | **Auger Assembly – Complete**<br>Fits 21" single-stage snow throwers 31**1**<br>& 31**2** models (1990 – 2005) | |
| **73-051** | Oregon® 73-050 | **Rubber Paddle Set**<br>Fits the Oregon 73-050 complete MTD auger assembly,<br>includes hardware | |

## Paddles

| | | | |
|---|---|---|---|
| **73-048** | Honda 06720-V10-030<br>• Code 6672448 | **Paddle Set**<br>Fits model HS520 snow thrower | |
| **73-006** | Honda 72521-730-003<br>• Code 1003375 | **Paddle Set**<br>Contains 8 pieces<br>Rectangles: 1-7/8" x 4-3/4"<br>Crescents: 9-1/4" x 2-1/8" | |
| **73-016** | MTD 731-0782<br>MTD 731-0781<br>MTD 731-0780<br>MTD 721-0287<br>MTD 753-0613<br>MTD 706-15688 | **Paddle Set**<br>Contains 6 pieces<br>Fits 21" Snow Wolf<br>Rectangles: 1-1/2" x 3-3/8" – 2 mtg. holes on 2" centers<br>Crescents: 1-1/2" x 11-1/4"<br>Use with Oregon 73-017 scraper bar | |

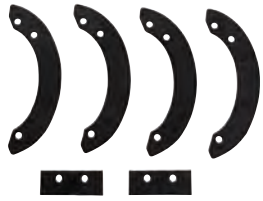

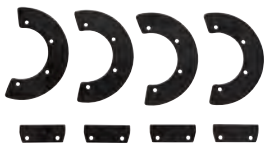

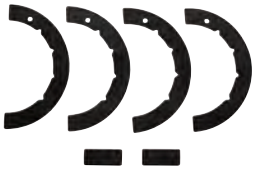

S

| OREGON | Replaces | Description | Product Code |
|---|---|---|---|

## Paddles

**73-043**
Snapper 6-1215
Snapper 61215
Snapper 7061215

**Paddle Set**
For 17" model LE-17 snow thrower

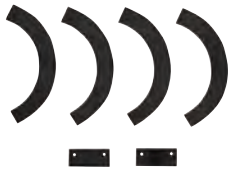

**73-001**
Snapper 6-0631
Snapper 60631
Snapper 7060631

**Paddle Set**
Contains 6 pieces
Fits model 3200 & 3201
Rectangles: 3-1/2" x 1-9/16"
Crescents: 11-1/2" x 1-9/16" – 6 mtg. holes on 2-1/2" centers
Use with Oregon® 73-013 scraper bar

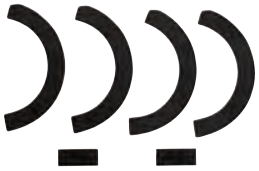

**73-046**
Toro 99-9313
Toro 88-0771
Toro 55-9250
Toro 55-9251

**Paddle**
Fits models CCR3650/2450 &
CCR3000 snow throwers

**73-003**
Toro 23-3730

**Paddle**
Fits models S200 & S620
Length: 17-11/16", width: 2-3/4"
Use with Oregon 73-014 scraper bar

**73-023**
Toro 54-9921
Toro 104-2753

**Paddle**
Fits CCR1000 snow thrower
Length: 21-1/2", width: 3"
8 mtg holes on 3-1/16" centers; mtg hole dia.: 7/16"
Use with Oregon 73-019 scraper

**73-037**
Toro 84-1980
Toro 75-9090
Toro 80-0660

**Paddle**
Fits Power Lite snow thrower
Use with Oregon 73-036 paddle

## Scraper Bars / Shave Plates

**73-029**
Ariens 10164

**Scraper Bar**
For 24" 2-stage snow throwers
Steel material

**73-049**
Honda 76322-V10-010
• Code 6672448

**Scraper Bar**
Fits model HS520 snow thrower

**73-824**
Honda 76322-747-A10

**Scraper Bar**
Fits HS521/621 models

**73-022**
John Deere M94511
Noma 302418

**Scraper Bar**
Fits model TRS21
Length: 20-15/16"
4 mtg. holes on 6-3/4" centers
Mtg. hole ID: 5/16"

S

# Snow Thrower Parts

| OREGON | Replaces | Description | Product Code |
|---|---|---|---|

## Scraper Bars / Shave Plates

| | | | |
|---|---|---|---|
| **73-008** | Jacobsen 991296<br>Jacobsen 990385<br>John Deere PT2254<br>Simplicity 1714519 | **Scraper Bar**<br>Fits Snowburst models and John Deere model 320<br>Length: 19", width: 2"<br>Also fits Cub Cadet and White snow throwers<br>Use with Oregon® 73-010 paddle | |
| **73-054** | Cub Cadet 790-00117-0637<br>Cub Cadet 784-5576 | **Shave Plate**<br>Fits some 22" 2-stage snow throwers (2007–2008) | |
| **73-055** | Cub Cadet 790-00118-0637<br>Cub Cadet 784-5582 | **Shave Plate**<br>Fits some 28" 2-stage snow throwers (2007–2008, & 2012) | |
| **73-056** | Cub Cadet 790-00119-0637 | **Shave Plate**<br>Fits some 30" 2-stage snow throwers (2007 & 2012) | |
| **73-057** | Cub Cadet 790-00120-0637<br>Cub Cadet 784-5581A | **Shave Plate**<br>Fits many 24" 2-stage snow throwers (2007–2012) | |
| **73-017** | MTD 731-1033<br>MTD 731-0778<br>MTD 731-0812<br>MTD 731-0722<br>MTD 706-14240 | **Scraper Bar**<br>Fits models 191, 174, 180, 181, & 196<br>snow throwers (1988 & newer)<br>Length: 19-7/8", slotted mtg. holes: 1/4" x 1"<br>4 mtg holes on 6" centers<br>Use with Oregon 73-016 paddle | |
| **73-058** | Cub Cadet 790-00121<br>Cub Cadet 753-0626<br>Cub Cadet 784-5579 | **Shave Plate**<br>Fits many 26" 2-stage snow throwers (2007–2012) | |
| **73-054** | MTD 790-00117-0637<br>MTD 784-5576 | **Shave Plate**<br>Fits many 22" 2-stage snow throwers (2005–2012) | |
| **73-055** | MTD 790-00118-0637<br>MTD 784-5579<br>MTD 784-5582 | **Shave Plate**<br>Fits many 28" 2-stage snow throwers (2005–2012) | |
| **73-056** | MTD 790-00119-0637 | **Shave Plate**<br>Fits many 30" 2-stage snow throwers (2005–2012) | |
| **73-057** | MTD 790-00120-0637<br>MTD 784-5581A | **Shave Plate**<br>Fits many 24" 2-stage snow throwers (2005–2012) | |

S

| OREGON | Replaces | Description | Product Code |
|---|---|---|---|

## Scraper Bars / Shave Plates

| | | | |
|---|---|---|---|
| **73-058** | MTD 790-00121<br>MTD 753-0626<br>MTD 784-5579 | **Shave Plate**<br>Fits many 26" 2-stage snow throwers (2007–2012) | |
| **73-823** | Simplicity 7035948SM | **Scraper Bar**<br>Fits 3HP, 19" snow throwers | |
| **73-044** | Snapper 2-4619<br>Snapper 28425 | **Scraper Bar**<br>Fits 17" model LE-17 snow thrower | |
| **73-013** | Snapper 1-8764<br>Snapper 1-8637<br>Snapper 28427 | **Scraper Bar**<br>Fits models 3200 & 3201<br>Length: 19-3/8", width: 2"<br>Use with Oregon® 73-001 paddle set | |
| **73-014** | Toro 23-3170 | **Scraper Bar**<br>Fits models S200 & S620<br>Length: 19-5/8", width: 1-3/4"<br>Use with Oregon 73-003 paddle | |
| **73-018** | Toro 55-8760 | **Scraper Bar**<br>Fits CCR2000 snow thrower<br>Length: 18-7/8", mtg. hole dia.: .290"<br>3 mtg. holes on 8-1/2" centers<br>Use with Oregon 73-015 paddle | |
| **73-019** | Toro 71-5390 | **Scraper Bar**<br>Fits CCR1000 snow thrower<br>Length: 19-1/2", slotted mtg. holes: 1/4" x 3/8"<br>3 mtg. holes on 8-1/8" centers<br>Use with Oregon 73-023 paddle set |  |
| **73-036** | Toro 75-8780 | **Scraper Bar**<br>Fits Power Lite snow thrower<br>Length: 15-3/8", width: 2-1/8", mtg. hole dia.: 1/4"<br>Use with Oregon 73-037 paddle |  |
| **73-835** | Toro 117-7717 | **Scraper Bar**<br>Fits Power Clear 180, 418, & 518 snow throwers |  |

## Skids

| | | | |
|---|---|---|---|
| **73-030** | Universal | **Skid**<br>Fits White models ST800, 850, 950 & 1050,<br>and many Toro, MTD, Deere, Noma, Murray, & Snapper models<br>Eccentric washers allow mounting to a variety<br>of mounting dimensions.<br>Mounting width: from 2" (min) to 3" (max), bolt holes: 3/8" | |
| **73-040** | Universal | **Skid**<br>Wear plate only<br>Use with Oregon 73-030 skid | |

S

# Snow Thrower Parts

| OREGON | Replaces | Description | Product Code | |
|---|---|---|---|---|
| **Skids** | | | | |
| **73-053** | AYP 178777X479<br>AYP 78777 | **Skid-RH**<br>Fits 2-stage snow throwers (2002–2010) | | |
| **73-052** | AYP 174762X479<br>AYP 174762 | **Skid-LH**<br>Fits 2-stage snow throwers (2002–2010) | | |
| **73-028** | Ariens 24599<br>Ariens 02483859<br>John Deere M124413 | **Skid**<br>Fits all Ariens snow blowers, models<br>924080 & 924082 with 24" auger (1960 & newer)<br>Center to center: 3" | | |
| **73-825** | Honda 76153-736-010 | **Skid**<br>Fits HS50/55/70/80/724 models | | |
| **73-100** | MTD 05002<br>MTD 05002-0637<br>Ariens 10165 | **Skid**<br>Fits 20" & 26" snow thrower models 225 & 590 (1988–1989) and Toro large frame snow blowers<br>For MTD, use with Oregon® 73-024 wear bar<br>Slots: 7/16" x 2"<br>2 slots on 3" centers | | |
| **73-020** | MTD 784-5038B<br>MTD 706-15944-00-10<br>MTD 784-5030 | **Skid**<br>For all 2-stage snow throwers 36", 40", 45", & Snowlite models (1995 & newer)<br>Length: 10-1/4", width: 3-1/2"<br>Slots: 7/16" x 2-1/2"<br>5 slots on 1-1/2" centers | | |
| **73-031** | MTD 784-5580 | **Skid**<br>For 2-stage snow throwers (1992 & newer)<br>Slots: 2-1/8"<br>2 slots on 2-3/4" centers | | |
| **73-059** | Murray 1740718AYP<br>Murray 780061<br>Murray 780061MA<br>Murray 301380E701 | **Skid**<br>Fits some 2-stage snow throwers | | |
| **73-027** | Snapper 37982<br>Snapper 32127<br>Snapper 7037982<br>Snapper 7032127 | **Skid**<br>For all 2-stage models<br>Width: 5", height: 2-1/2"<br>Slots: 5/16" x 1-5/8"<br>2 slots on 3" centers | | |

S

| OREGON | Replaces | Description | Product Code |
|---|---|---|---|

## Skids

| | | | |
|---|---|---|---|
| **73-038** | Toro 40-8160-01<br>Toro 3-3866 | **Skid**<br>Length: 5", width: 2-3/4"<br>Slots: 5/16" x 1-5/8"<br>2 slots on on 2" centers | |

## Vane

| | | | |
|---|---|---|---|
| **73-026** | Toro 52-7060 | **Vane**<br>Fits models S200 & S620 | |

## Starter Handle

| | | | |
|---|---|---|---|
| **31-907** | John Deere PT10615<br>Toro 77-8510 | **Starter Handle**<br>Mitten grip<br>For Toro, Ariens, and others – snow blowers and lawnmowers | |

## Drive Discs

| | | | |
|---|---|---|---|
| **76-067-0** | Ariens 3003<br>Gilson 32222<br>Jacobsen 158458<br>Snapper 1-0765<br>Snapper 10765<br>Snapper 7010765<br>Lawn Boy 741316<br>Gilson 18915 | **Drive Disc**<br>For large frame snow throwers<br>Fits John Deere 828D & 1032D snow throwers<br>OD: 6", ID: 5 3/8" | |
| **76-070-0** | Noma 53830<br>Ariens 22013<br>John Deere AM123355<br>Noma 313883 | **Drive Disc**<br>For 20", 23", & 25" snow throwers<br>Fits John Deere 524D & 826D snow throwers<br>OD: 4.4" | |
| **76-073-0** | MTD 05080A | **Drive Disc**<br>Fits models 500, 510, 520, & 600<br>OD: 6" | |

## Drive Ring

| | | | |
|---|---|---|---|
| **76-075** | MTD 935-0243B | **Drive Ring-Rubber**<br>For self-propelled snow throwers (1992–2005)<br>OD: 5", ID: 4", width: 1/2" | |
| **76-076** | Husqvarna 532179831 | **Drive Ring-Rubber**<br>For many snow throwers (2002 & newer)<br>OD: 4-1/2", ID: 3-3/4", width: 1/2" | |

# Snow Thrower Parts

## Shear Bolts

| OREGON | Replaces | Description | Product Code | |
|---|---|---|---|---|
| **80-747** | Universal | **Shear Bolt**<br>For Noma, Canadiana, & older MTDs<br>Length: 2", size: 5/16-18 | | |
| **80-740** | Ariens 510015<br>Snapper 1-3865<br>Snapper 9-1550<br>Snapper 13865<br>Snapper 91550<br>Snapper 7013865<br>Snapper 7091550<br>John Deere AM122156 | **Shear Bolt**<br>For popular Ariens large frame models<br>Length: 2", size: 5/16-18 | | |
| **80-741** | Ariens 510016<br>Jacobsen 342449 | **Shear Bolt**<br>For popular Ariens small frame models<br>Length: 1-5/8", size: 1/4-20 | | |
| **80-742** | Ariens 532005<br>John Deere AM123342 | **Shear Bolt**<br>For compact snow throwers<br>Length: 1-7/16", size: 1/4-20 | | |
| **80-017** | Honda 90102-732-010 | **Shear Bolt**<br>Fits HS50/55/624/70/80/828/928/1132/724 models | | |
| **80-018** | Husqvarna 531002513 | **Shear bolt**<br>Fits ST1030, ST723, & ST926 snow throwers | | |
| **80-019** | MTD 738-04155 | **Shear Bolt**<br>Fits 31A snow throwers (2005–2014)<br>5/16-18 x 1.75 | | |
| **80-743** | MTD 710-0890 | **Shear Bolt**<br>For 400, 500, 600, & 700 series snow throwers<br>Length: 1-1/2", size: 5/16-18 | | |
| **80-746** | MTD 710-0891 | **Shear Bolt**<br>Fits 800 & 900 series snow throwers<br>Length: 1-3/4", size: 5/16-18 | | |
| **80-748** | Noma 301172 | **Shear Bolt**<br>For 22", 23", 24", 25", & 27" snow throwers with 12" augers<br>Length: 1-3/4", size: 1/4-20 | | |

S

| OREGON | Replaces | Description | Product Code |
|---|---|---|---|

## Shear Bolts

| | | | |
|---|---|---|---|
| **80-749** | MTD 738-04124 | **Shear Pin**<br>For newer style snow throwers with shear and hair pin combination<br>Non-threaded<br>Use with Oregon® 02-901 hair pin<br>Length: 1-1/2", diameter: 1/4" | |
| **02-901** | MTD 714-04040 | **Hair Pin**<br>For newer style snow throwers<br>Use with Oregon 80-749 shear pin | |
| **80-015** | Murray 301171MA<br>Murray 301171<br>Murray 1501217MA<br>Murray 1501217 | **Shear Bolt Kit**<br>For dual stage snow throwers | |
| **80-016** | Snapper 7015257YP | **Shear Bolt**<br>For dual stage snow throwers | |

## Bearings & Bushings – John Deere, Ariens

| | | | |
|---|---|---|---|
| **45-006** | Ariens 55035<br>John Deere M124417 | **Bushing**<br>Fits auger shaft on models 924036, 924038, 924039, 924040, 924046, 924048, 924050, 924071, 924072, & 924073<br>OD: 1-1/8": ID: 1", length: 5/8", flange OD: 1-1/2", thickness: 1/8" | |
| **45-007** | Ariens 55039<br>John Deere M127082 | **Bushing**<br>Fits auger shaft on models 923001, 923004, 923006, 923014, 923017, 923018, 923019, 923020, 923022, & 923023,<br>OD: 1", ID: 3/4", length: 5/8", flange OD: 1-1/4", thickness: 5/32" | |
| **45-008** | Ariens 55110<br>John Deere M127164 | **Bushing**<br>OD: 3/4", ID: 1/2", length: 5/8", flange OD: 1", thickness: 1/8" | |
| **45-009** | Ariens 55112<br>John Deere M127538 | **Bushing**<br>Fits impeller shaft on 924046, 924048, 924050, 924072, 924073, 924071, 924036, 924038, 924039, & 924040,<br>OD: 1", ID: 3/4", length: 3/4", flange OD: 1-1/4": thickness: 1/8" | |
| **45-013** | Ariens 55030<br>John Deere M41522 | **Bushing**<br>Fits models 910 & 924<br>OD: 1", ID: 7/8", length: 5/8", flange OD: 1-1/4", thickness: 1/8" | |
| **45-003** | Ariens 55028 | **Bushing**<br>OD: 1.135", ID: .760", length: 765", flange OD: 1-3/8", thickness: 1/8" | |

S

# Snow Thrower Parts

| OREGON | Replaces | Description | Product Code | |
|---|---|---|---|---|
| **Bearings & Bushings – John Deere, Ariens** | | | | |
| **45-275** | Ariens 05500111 | **Flange Bushing**<br>For snow thrower friction drive<br>0.625" x 0.75" x 0.50" x 0.875" | | |
| **45-268** | Ariens 05409300 | **Ball Bearing**<br>Fits snow thrower auger<br>0.88" x 1.75" x 0.50" | | |
| **45-270** | Ariens 05417700 | **Ball Bearing**<br>Fits snow thrower wheel drive<br>1.45" x 2.19" x 0.63" | | |
| **45-271** | Ariens 05418200 | **Ball Bearing**<br>Fits snow thrower auger and drive<br>1.0" x 2.0" x 0.56" | | |
| **45-272** | Ariens 05435200 | **Ball Bearing**<br>Fits snow throwers friction drive<br>0.437" x 1.375" x 0.437" | | |
| **Bearings & Bushings – Cub Cadet, MTD** | | | | |
| **45-048** | 741-0185<br>941-0185 | **Bearing**<br>For snow blower drive axle, self aligning<br>Fits 800 & 900 series snow blowers, 28" & 33" width<br>OD: 2-1/16", ID: 7/8", height: 1" | | |
| **45-050** | 741-0310<br>941-0310 | **Bearing**<br>For 20–24" & 36–40" snow blowers<br>OD: 1.850", ID: 3/4" | | |
| **45-082** | 741-0490<br>741-0199<br>748-0151<br>941-0490 | **Bushing**<br>For shift shafts 20–21"<br>OD: 1-1/4", ID: 3/4", height: 3/4" | | |
| **45-092** | 741-0293<br>748-0143<br>941-0293 | **Bushing**<br>For auger<br>OD: 1", ID: 3/4", height: 3/4" | | |

S

| OREGON | Replaces | Description | Product Code |
|---|---|---|---|

## Bearings & Bushings – Cub Cadet / MTD

| | | | |
|---|---|---|---|
| **45-095** | 741-0313<br>741-0487<br>941-0487A | **Bushing**<br>OD: 13/16", ID: 5/8", height: 1" | |
| **45-833** | 941-0475<br>741-0475 | **Flange Bushing**<br>For steering on riders, augers and chute assembly assembly on snow thrower<br>OD: 1/2", ID: 3/8", width: 3/8", flange OD: 5/8", thickness: 3/32" | |
| **45-276** | 741-0494 | **Flange Bushing**<br>Fits 31A model series snow throwers (1990–2014)<br>ID: 1.05", OD: 1.16" | |
| **45-280** | 741-0661B<br>741-0661A<br>741-0661 | **Flange Bushing**<br>Fits 31A model series snow throwers (2000–2014)<br>ID: 0.754", OD: 1.0" | |
| **45-281** | 741-0662 | **Flange Bushing**<br>Fits 31A model series snow throwers (1997–2014)<br>ID: 0.75", OD: 1.0", height: 0.50" | 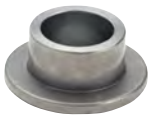 |
| **45-279** | 741-0663 | **Flange Bushing**<br>Fits 31A model series snow throwers (1997–2014)<br>ID: 0.75", OD: 1.0" height: 0.925" | 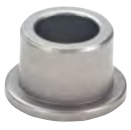 |
| **45-278** | 941-0170<br>741-0170<br>741-0192<br>741-0244<br>941-0244 | **Flange Bushing**<br>Fits 31A model series snow throwers (2012–2014)<br>ID: 1.0" w/ flats | |
| **45-277** | 948-0108<br>748-0108<br>748-0269 | **Flange Bushing**<br>Fits 31A model series snow throwers (1985–2013)<br>ID: 0.503", OD: 0.75" | |

## Bushing – Noma

| | | | |
|---|---|---|---|
| **73-025** | 54837<br>577023 | **Bushing**<br>For auger<br>ID: .670", mtg. holes dia.: 1/4", center to center: 2.932"<br>Length: 3-3/4", width: 1-7/8", thickness: .925" | |

## Miscellaneous Parts – Cub Cadet / MTD

| | | | |
|---|---|---|---|
| **73-832** | 731-0851A<br>731-0851 | **Chute Flange Keeper**<br>Fits 31A model series snow throwers (1987–2014) | |
| **73-833** | 731-04869A<br>731-04869 | **Chute Flange Keeper**<br>Fits 31A model series snow throwers (2005–2014) | |

S

# Snow Thrower Parts

| OREGON | Replaces | Description | Product Code | |
|---|---|---|---|---|

## Miscellaneous Parts – Cub Cadet / MTD

| | | | |
|---|---|---|---|
| **73-831** | 731-04894D<br>731-04894C<br>731-04894B<br>731-04894A<br>731-04894 | **Lock Plate**<br>Fits 31A model series snow throwers (2005–2014) | |
| **73-829** | 731-04896B<br>731-04896A<br>731-04896 | **Clutch Lock Cam**<br>Fits 31A model series snow throwers (2005–2014) | |
| **73-830** | 731-06451 | **Chute Tilt Cable Guide**<br>Fits 31A model series snow throwers (2008–2014) | |
| **73-834** | 731-1313C<br>731-1313B<br>731-1313A<br>731-1313 | **Chute Tilt Cable Guide**<br>Fits 31A model series snow throwers (1990–2014) | |
| **73-828** | 731-04913 | **Steering Control Trigger**<br>Fits 31A snow throwers (2005–2014) | |
| **84-014** | 917-1425<br>717-1425 | **Bronze Worm Gear**<br>For snow throwers (1998–2014) | |
| **72-054** | 734-1781<br>734-1855<br>734-1782<br>734-1656<br>734-1608 | **Wheel**<br>Fits 31A snow throwers (2009–2014)<br>Bar tread: 8" x 1-3/4" | |

## Cables – Cub Cadet / MTD

| | | | |
|---|---|---|---|
| **46-002** | 746-0506<br>746-0573 | **Cable – Clutch**<br>For 21" snow thrower | |
| **46-005** | 746-0910A | **Cable – Clutch**<br>For snow throwers<br>Overall length: 42-1/4",<br>Conduit length: 35-5/8" | |
| **46-032** | 746-04229B<br>746-04229<br>946-04229B<br>946-04229 | **Cable – Drive Clutch**<br>For many 2-stage snow throwers (2005–2012) | |

S

## Cables – Cub Cadet / MTD

| OREGON | Replaces | Description | Product Code |
|---|---|---|---|
| **46-033** | 746-04230A<br>746-04230<br>946-04230A<br>946-04230 | **Cable – Auger Clutch**<br>For many 2-stage snow throwers (2005–2012) | |
| **46-034** | 746-04236<br>946-04236 | **Cable – Auger Clutch**<br>For many 2-stage snow throwers (2005–2012) | |
| **46-035** | 746-04237<br>946-04237 | **Cable – Clutch**<br>For many single stage snow throwers (2005–2010) | 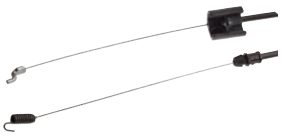 |
| **46-036** | 746-04256<br>946-04256 | **Cable – Traction Drive**<br>For many 2-stage snow throwers (2005–2008) | 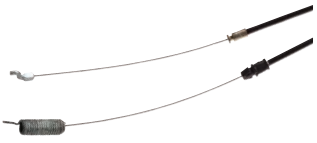 |
| **46-038** | 746-04477<br>946-04477 | **Cable – Chute 4-Way Control**<br>For some 2-stage snow throwers with joystick chute control (2009–2012) | |
| **46-039** | 746-04528A<br>746-04528B<br>946-04528A<br>946-04528B | **Cable – Chute 4-Way Control**<br>For some 2-stage snow throwers with joystick chute control (2009–2012) | |
| **46-042** | 746-04640<br>946-04640 | **Cable – Auger**<br>For some 2-stage snow throwers (2009–2012) | 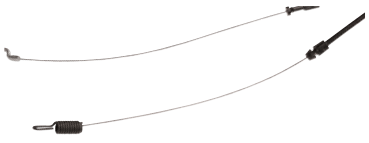 |
| **46-043** | 746-04642<br>746-04642A<br>946-04642<br>946-04642A | **Cable – Traction Drive**<br>For some 2-stage snow throwers (2009–2012) | |
| **46-044** | 746-0897<br>746-0897A<br>946-0897<br>946-0897A | **Cable – Auger Clutch**<br>For many 2-stage snow throwers (1995–2012) | |

S

# Snow Thrower Parts

| OREGON | Replaces | Description | Product Code | |
|---|---|---|---|---|

## Cables – Cub Cadet / MTD

| | | | | |
|---|---|---|---|---|
| **46-006** | 746-0898B<br>746-0898<br>746-0898B<br>946-0898B | **Cable – Traction Drive**<br>For many 2-stage snow throwers (1995–2012) | | |
| **46-046** | 746-0902<br>946-0902 | **Cable – Chute**<br>For some 2-stage snow throwers (1998–2010) | | |
| **46-047** | 746-0903<br>946-0903 | **Cable – Chute**<br>For some 2-stage snow throwers (1998–2010) | | |
| **46-048** | 746-0949A<br>746-0949 | **Cable – Steering**<br>For some 2-stage snow throwers (1998–2010) | | |
| **46-049** | 746-0956B<br>946-0956B<br>946-0956C | **Cable – Steering**<br>For some 2-stage snow throwers (1998–2012) | | |
| **46-337** | 946-04007<br>746-04007 | **Auger Control Cable**<br>Fits 31A snow throwers (2004–2010)<br>Total length: 48-13/16"<br>Conduit length: 35-1/4" | | |
| **46-342** | 946-04008<br>746-04008 | **Drive Control Cable**<br>Fits 31A snow throwers (2004-2010)<br>Total length: 50-5/8"<br>Conduit length: 33-11/16" | | |
| **46-341** | 946-0951A<br>746-0951A<br>746-0951 | **Auger Idler Cable**<br>Fits 31A snow throwers (1998–2014)<br>Total length: 16-5/16"<br>Conduit length: N/A | | |
| **46-340** | 746-0952 | **Drive Control Cable**<br>Fits 31A snow throwers (1998–2014)<br>Total length: 26-1/2"<br>Conduit length: N/A | | |

S

| OREGON | Replaces | Description | Product Code |
|---|---|---|---|

## Cables – Cub Cadet / MTD

| | | | |
|---|---|---|---|
| **46-339** | 946-0896<br>746-0896 | **Chute Deflector Control Cable**<br>Fits 31A snow throwers (1993–2005)<br>Total length: 54-3/8"<br>Conduit length: 43-7/8" | |
| **46-338** | 946-0901<br>746-0901 | **Chute Deflector Control Cable**<br>Fits 31A snow throwers (1998–2005)<br>Total length: 54-3/8"<br>Conduit length: 43-7/8" | |

## Carburetor Kits – Cub Cadet / MTD

| | | | |
|---|---|---|---|
| **49-329** | 951-12760A<br>951-11332A<br>951-11332<br>751-12760A<br>751-11332A<br>751-11332 | **Carburetor Kit**<br>Fits 31A model series snow throwers with 483-SUB engines (2008 – 2014) | |
| **49-331** | 951-12762A<br>951-11219A<br>951-11219<br>751-12762A<br>751-11219A<br>751-11219 | **Carburetor Kit**<br>Fits 31A model series snow throwers with 478-SUA/SUB engines (2009–2014) | |
| **49-328** | 951-12788A<br>951-11021A<br>951-11021<br>751-12788A<br>751-11021A<br>751-11021 | **Carburetor Kit**<br>Fits 31A model series snow throwers with 170-SU/270-JU/270-SUA/370-SUC engines (2008–2014) | |
| **49-327** | 951-14231<br>951-11355A<br>951-11355<br>751-14321<br>751-11355A<br>751-11355 | **Carburetor Kit**<br>Fits 31A model series snow throwers with 490-SU/490-SUA engines | |

## Carburetors – Tecumseh

| | | | |
|---|---|---|---|
| **50-640** | 640084B | **Carburetor**<br>Fits models HSK50, HSK40, & LH195SP<br>Replaces MFG No. 5285 | |
| **50-642** | 632334A | **Carburetor**<br>Fits models HM70, HM80, HMSK80, & HMSK90<br>Replaces MFG No. 1099 & 1432 | |

S

# Snow Thrower Parts

| OREGON | Replaces | Description | Product Code |
|---|---|---|---|

## Carburetors – Tecumseh

| | | | |
|---|---|---|---|
| **50-659** | 640349<br>640052<br>640054 | **Carburetor**<br>Fits models HMSK80, HMSK85, HMSK90, HMSK100, HMSK105, LH318SA, & LH358SA<br>Replaces MFG No. 5313, 5002, & 5036 | |

## Primer – Cub Cadet / MTD

| | | | |
|---|---|---|---|
| **49-326** | 951-10639A<br>951-10639<br>951-10639<br>751-10639A<br>751-10639 | **Primer Assembly**<br>Fits 31A model series snow throwers (2008–2014) | |

## Recoil Starters – MTD

| | | | |
|---|---|---|---|
| **31-119** | 951-10658<br>751-10658 | **Recoil Starter**<br>Fits snow throwers with 165-SU, 265-SU, 270-SU, 365-SU, or 370-SU engines (2008 & newer) | |
| **31-120** | 951-10955<br>751-10955 | **Recoil Starter**<br>Fits snow throwers with 161-JW or 161-JWA engines (2008 & newer) | |
| **31-121** | 951-11310<br>751-11310 | **Recoil Starter**<br>For snow throwers with 483-SU, 483-SUA, 490-SU, or 490-SUA, engines | |

## Recoil Starter – Tecumseh

| | | | |
|---|---|---|---|
| **31-051** | 590420A | **Recoil Starter**<br>Fits Snow King applications (1989 & older) | |
| **31-116** | 590789 | **Recoil Starter**<br>Fits models LH318SA, LH358SA, OH318SA, OH195SA, & OH358SA<br>❄ Has winter pulley | |

S

| OREGON | Replaces | Description | Product Code |
|---|---|---|---|

## Recoil Starter – Tecumseh

| | | | |
|---|---|---|---|
| **31-117** | 590787<br>590784 | **Recoil Starter**<br>Fits model LH195SA<br>❄ Has winter pulley | |

## Starter Motors – MTD

| | | | |
|---|---|---|---|
| **33-745** | 951-11196<br>751-11196 | **Electric Starter Motor, 120V**<br>Fits snow throwers with 478-SU, 483-SU, or 490-SU engines (2009–2010) | |
| **33-746** | 951-10645A<br>751-10645A | **Electric Starter Motor, 120V**<br>Fits snow throwers with 265-JU, 270-JU, 165-SU, 370-SU, 365-SUA, 365-SUB, 370-SUA, 370-SUB, or 270-V engines (2007–2010) | |

## Starter Motors – Tecumseh

| | | | |
|---|---|---|---|
| **33-738** | 33329E | **Electric Starter Motor, 120V**<br>Fits TVM, TVXL, HMSK, or OHSK engines | |

## Ignition Keys

| | | | |
|---|---|---|---|
| **33-256** | Cub Cadet 951-10630<br>Cub Cadet 751-10630<br>Cub Cadet 731-05632<br>MTD 951-10630<br>MTD 751-10630<br>MTD 731-05632 | **Ignition Key**<br>Fits 31A model series snow throwers (2008–2014) | |
| **33-089** | Cub Cadet 725-1660<br>MTD 725-1660<br>Tecumseh 35062 | **Ignition Key**<br>For snow throwers with Tecumseh engines | |

S

# Snow Thrower Parts

## Belts

| OREGON | OEM No. | Size | Description | Product Code |
|---|---|---|---|---|
| **Ariens** | | | | |
| 75-906 | 7200004 | 1/2" x 36" | **Auger Drive Belt**<br>Fits 924124, 924125, 924126, 924127, 924335, 924336, & 924337 raw edge | |
| 75-907 | 7200007 | 1/2" x 35" | **Auger Drive Belt**<br>Fits 932105 & 932506 raw edge | |
| 75-908 | 7200020 | 1/2" x 37-3/8" | **Auger Drive Belt**<br>Fits 926001, 926002, 926004, 926005, 926101, 926102, 926300, 926301, 926304, & 926504 raw edge | |
| 75-909 | 7200021 | 1/2" x 38-3/8" | **Auger Drive Belt**<br>Fits 926003, 926006, 926103, 926302, 926303, 926500, & 926501 raw edge | |
| 75-983 | 7236200 | 1/2 x 38" | **Auger Drive Belt**<br>Fits 924500, 924503, & 924506 raw edge | |
| 75-098 | 7204700 | 3/8" x 35-3/4" | **Auger Drive Belt**<br>Fits ST524,ST624,ST724,ST824,ST732,& ST832 | |
| 75-080 | 7205600 | 1/2" x 32" | **Auger Drive Belt**<br>Fits 22999, 922002, 922003, 922006,922007, 922008, 922009, 922010, 922012, 922014, 922016, 922018, 922019, 922020, 922021, 922022, 922023, 922024, 922024, & 922999 | |
| 75-067 | 7207400 | 1/4" x 27" | **Traction Drive Belt**<br>Fits 922003, 922006, 922007, 922007, 922008, 922008, 922009, 922010, 922012, 922013, 922014, 922015, 922016, 922017, 922018, 922019, 922020, 922021, 922022, 922023, 922024, & 922025<br>Set of two, matched | |
| 75-117 | 7208600 | 1/2" x 40" | **Auger Drive Belt**<br>Fits 924027, 924040, 924050, 924051, 924071, 924072, 924073, 924074, 924075, 924076, 924077, 924079, 924080, 924082, 924085, 924087, 924091, 92492, 924093, 924100, 924101, 924102, 924103, 924104, 924105, 924106, 924107, 924108, 924109, 924110, 924111, 924112, 924113, 924311, 924317, 924318, 924319, 924320, 924321, 924322, 924323, 924324, 924325, 924326, 924327, 924328, 924329, 924330, & 924500 | |
| 75-096 | 7210800<br>7206100<br>7207200<br>7208300 | 1/2" x 36-3/4" | **Auger Drive Belt**<br>Fits 924024, 924026, 924028, 924029, 924032, 924036, 924038, 924039, 924042, 924044, 924046, 924048, 924052 924054, 924081, 924083, 924084, 924086, 924312, & 924313 | |
| 75-084 | 7211400 | 1/2" x 34-7/8" | **Auger Drive Belt**<br>Fits 932001, 932004, 932006, 932007, 932016, 932025, 932030, 932102, 932103, 932310, 932400, & 932500 | |
| **AYP** | | | | |
| 115-222 | 408010<br>183533 | 5/8" x 38" | **Impeller Drive Belt**<br>Fits snow blower models 10527SBE (2003–2008), 10530SBE (2006), 1130SBE (2006 –2008), 5524SB, 5524SE, 5524ST, 5524STE (2002–2008), 8024ST (2002), 8524ST (2004), 8527SB (2006), 9027ST (2002–2004), 924SB, & 927SB (2006–2008) | |
| 115-220 | 408007 | 5/8" x 38-1/4" | **Impeller Drive Belt**<br>Fits snow blower models 10527SB, 1130SB, 5524SB (2008), 14527SB, 15530SB, ST261E (2009), 924SB (2008–2010), 1650EXL, ST230E (2012), 924HV (2010–2013), 5524ST, ST276EP (2012–2013), 11524E, 14527E, & ST268EP (2013) | |
| 115-221 | 408019 | 5/8" x 39-1/4" | **Impeller Drive Belt**<br>Fits snow blower models 1130SB (2008), 13524SB, 14527SB, 15530SB, 16530SB, ST261E, ST276EPT (2009), 1330SB (2008–2009), 16527EXL, 16530EXL (2011), 1650EXL, ST2109E, ST268EP, ST276EP (2012), 11524E, 14527E (2010–2012), 924HV (2010–2013), 5524ST, & ST276EP (2012–2013) | |
| 115-223 | 428454<br>532428454 | 1/2" x 29-1/2" | **Traction Drive Belt**<br>Fits snow thrower models 1827EXLT & 130 EXLT | |
| **MTD** | | | | |
| 75-365 | 954-0131<br>754-0131 | 3/8" x 35-1/2" | **Traction Drive Belt**<br>Fits 310-840, 310-850, 310-965, 311-840, 311-850, 311-965, 312-980, 313-980, 314-980, 315-800, 315-860, 315-960,315-980, 316-800, 317-841, 317-850, 317-960, 318-840, 318-850, 319-840, 319-850, 319-960, 840-027, 840-031, 840-050, 840-095, 840-105, 840-205, 840-206, 840-327, 850-031, 850-054, 850-105, 850-205, 850-327, 960-206, 960-327, 31AE880, 31AE983, 31AE993, 31AE9P3, 31AE906, & 31AE9P6 | |
| 75-090 | 954-0194<br>754-0194 | 1/2" x 45" | **Auger Drive Belt**<br>Fits 310-840, 310-850, 310-965, 311-840, 311-850, 311-965, 312-980, 313-980, 314-980, 315-800, 315-860, 315-960,315-980, 316-800, 317-841, 317-850, 317-960, 318-840, 318-850, 319-840, 319-850, 319-960, 840-027, 840-031, 840-050, 840-095, 840-105, 840-205, 840-206, 840-327, 850-031, 850-054, 850-105, 850-205, 850-327, 960-206, 960-327, 31AE880, 31AE983, 31AE993, 31AE9P3, 31AE906, & 31AE9P6 | |

## Belts

| OREGON | OEM No. | Size | Description | Product Code |
|---|---|---|---|---|
| **MTD** | | | | |
| 75-157 | 954-0367<br>754-0367 | 3/8" x 34-1/2" | **Auger Drive Belt**<br>Fits 310-180, 310-181, 310-183, 311-180, 311-181, 311-183, 311-184, 312-180, 312-181, 313-180, 313-181, 314-180, 314-181, 315-140, 315E140, 316-140, 316E140, 317-140, 317E140, 31AS231, 31AE5KL, 31A-140, 31A-150, 31A-240, 31A-242, 31A-250, 31A260, 31AE150, 31AE162,31A-62E, 31AH62E, 31AH6ZF, 31AH6ZL, 31AH9J6, 31AM62E, 31AM62K, 31AM63E, 31AM63F, 31AM63L, 31AS230, 31AS231, 31AS250, 31AS6DE, 31AS6WE, 31B-140, 31BE150, 31B-140, 31C-140, & 31D-140.<br><br>**Wheel Drive Belt**<br>Fits 31AE5HT, 31AE6FF, 31AH5WT, 31AM62E, 31AM63T, 31AS6BC, 31AS6BE, 31AS6FE, 31AS6DT, 31AS6HE, & 31AS6WE | |
| 75-158 | 954-0430B<br>754-0430 | 3/8" x 35-1/8" | **Auger Drive Belt**<br>Fits 312-640, 312-660, 312-642, 313-640, 313-642, 313-660, 314-640, 314-642, 314-616, 314-660, 314-666, 31A-611, 31A-614, 31A-615, 315-611, 315-613, 315-641, 315-718, 315E610, 315E640, 315E641, 315E643, 315E60, 315E663, 315E740, 315E748, 315E753, 316-610, 316-611, 316-613, 316-641, 316E610, 316E611, 316E613, 316E633, 316E640, 316E641, 316E643, 316E660, 316E661, 316E663, 316E733, 316E740, 316E753, 316E760, 317-611, 317E610, 317E611, 317E613, 317E733, 317E738, 317E740, 317E742, 317E753, 317E760, 317E762, 31AE600, 31AE610, 31AE611, 31AE613, 31AE614, 31AE633, 31AE640, 31AE644, 31AE645, 31AE653, 31AE660, 31AE662, 31AE663, 31AE664, 31AE665, 31AE740, 31AE753, 31AE765, 31AE6C0, 31AE740, 31AE6A4, & 31BE640 | |
| 115-219 | 954-04050<br>754-04050 | 1/2" x 25" | **Auger Drive Belt**<br>Fits 2-stage snow throwers (2005–2013) | |
| 15-052 | 954-04201A | 3/8" x 36" | **Wheel Drive Belt**<br>For models 31AH54TG, 31AH55LH, 31AH55TH, 31AH64EG, 31AH65FH, 31AH65LG, 31AM62EE, 31AM63EF, 31BM62KE, & 31BM63LF (2009–2011) | |
| **Murray** | | | | |
| 15-014 | 579932MA | 3/8'' x 33-3/16'' | **Ground Drive Belt**<br>For dual stage snow throwers (2000–2008) models 622505, 622515, 622518, 624504, 624505, 624604, 624650, 629117, 62451, 6271200, 6271201, 6271500, 624808, 624858, 626750, 626752, 627107, 627108, 627109, 627117, 627118, 627804, 627808, 627809, 627815, 627850, 627858, 627904, 627954, 628102, 628104, 629105, 629106, 629108, 629109, 629110, 629111, 629118, 629119, 629159, 629924, 631108, 6240810, 6271100, 6240900, 6271200, 6271201, 6271270, 6271271, Sno Super, Sno Blizzard, Alpina, and Sno Unlimited | |
| **Noma** | | | | |
| 75-289 | 319596 | 6V x 35-1/8" | **Auger Drive Belt**<br>Fits all 3 and 4.5 HP models 6V Poly rib | |
| **Sears / Craftsman** | | | | |
| 15-052 | 954-04201A<br>954-04201<br>754-04201 | 3/8" x 36" | **Wheel Drive Belt**<br>For models 247.88791, 247.88830, & 247.888301 (2009–2011) | |
| **Snapper** | | | | |
| 75-727 | 2-9604<br>7029604 | 3/8" x 33" | **Drive Belt**<br>Fits 3200 series | |
| **Toro** | | | | |
| 15-051 | 26-9672 | 1/2" x 30-1/2'' | **Auger Drive Belt**<br>For models 622, 622E, 622R, 722, & 724 (1993 and newer) | |
| 75-980 | 37-9080 | 3/8" x 29-5/8" | **Drive Belt**<br>Fits 421 and 521 series | |
| 75-066 | 55-9300 | 6V x 34" | **Auger Drive Belt**<br>Fits CCR2000 6V poly rib | |
| 75-192 | 71-5381 | 3/8" x 34-3/4" | **Drive Belt**<br>Fits CCR1000 | |
| 75-939 | 95-6151 | 5V x 33-7/8" | **Auger Drive Belt**<br>Fits CCR2400, CCR2450, CCR2500, CCR3000, CCR3600, & CCR3650. 5V poly rib | |
| **Troy-Bilt** | | | | |
| 15-052 | 954-04201A<br>954-04201<br>754-04201 | 3/8" x 36" | **Wheel Drive Belt**<br>For models Storm 2410, Storm 2620, Storm 2840, Storm 3090, & Storm 3090XP (2009–2011) | |

S

OREGON®

# Spark Plugs

- Trouble-free ignition
- Easy start even in cold weather conditions
- Optimum engine performance
- Complete combustion, clean exhaust
- Extended spark plug life

## Oregon® Spark Plugs

| OREGON | Champion | Bosch | NGK | Nippondenso | Autolite | AC | Std. Pkg | Application | Product Code |
|---|---|---|---|---|---|---|---|---|---|
| 77-134 | RCJ6Y | WSR6F | BPMR7A | —— | 2984 | CSR42S | 10 | **Resistor Plug** | |
| 77-145 | RCJ4Y | WSR4F | BPMR8Y | —— | 2974 | —— | 10 | **Resistor Plug** | |
| 77-167 | RZ7C | USR4AC | CMR7H | —— | —— | —— | 10 | **Resistor Plug** | |
| 77-189 | —— | —— | CMR6A | —— | 4194 | —— | 10 | **Resistor Plug** | |
| 77-193 | C12YCC | FR8D+ | BKR5E | —— | 5224 | FR3LSK | 10 | **Resistor Plug** | |
| 77-194 | RJ4 | WR7EC | BR6S | —— | | CR43 | 10 | **Resistor Plug** | |
| 77-196 | L10 | W7AC | B6HS | —— | 425 | —— | 10 | **Resistor Plug** | |
| 77-197 | RN7YC | WR6DC | BPR7ES | —— | 4252 | R41CLS | 10 | **Resistor Plug** | |
| 77-198 | RDJ7Y | —— | BPMR6F | —— | 2554 | —— | 10 | **Resistor Plug** | |
| 77-199 | Z9Y | U6AC | CR5HS | —— | —— | —— | 10 | Honda 4-cycle trimmers | |
| 77-200 | Rz7C | —— | CMR5H | —— | 4194 | —— | 10 | **Resistor Plug** Stihl 4-cycle engines Shindaiwa DH2510, EB8510, EB8520, HT2510 and LE2510 | |
| 77-300-1 | CJ7Y | WS8F | BPM7A | W22MP-U | 2974 | CS42S | 10 | Alpina, Castor, Dynamark, Husqvarna, Jonsered, Lombard, Olympyk, & Solo chainsaws | |
| 77-301-1 | J19LM | W9EO | B2LM | W14LM-U | 458 | —— | 10 | Newer Briggs & Stratton & Tecumseh | |
| 77-302-1 | CJ8 | WS8E | BM6A | W20M-U/ | 2995 | CS41 | 10 | Briggs, Echo, & Poulan | |

## Oregon® Spark Plugs

| OREGON | Champion | Bosch | NGK | Nippondenso | Autolite | AC | Std. Pkg | Application | Product Code |
|---|---|---|---|---|---|---|---|---|---|
| 77-303-1 | RC12YC | FR8DC | BCPR5ES | Q16PR-U11 | 5224 | FR2LSK | 10 | **Resistor Plug** – Briggs & Stratton, Vanguard, & Kohler Command | |
| 77-304-1 | DJ8J | HS8E | BM6F | WA20M-U | 2956 | CS45T | 10 | Homelite, McCulloch, & others | |
| 77-305-1 | RJ19LM | W7AC | BR2LM | W14LM-U | 414 | —— | 10 | **Resistor Plug** – Briggs & Stratton, & Tecumseh | |
| 77-306-1 | RCJ8 | —— | BMR6A | W20MR-U | 245 | —— | 10 | **Resistor Plug** – Fits most single cylinder Briggs & Stratton, & Kawasaki 12.5 HP | |
| 77-307-1 | RCJ6Y | WSR5F | BPMR7A | W22MP-U | | —— | 10 | **Resistor Plug** – Tecumseh TC300 & Stihl chainsaws | |
| 77-308-1 | CJ6 | WS7E | BM7A | W22M-U | 254 | CS40 | 10 | For chainsaws & trimmers | |
| 77-309-1 | CJ8Y | WS7F | BPM6A | W20MP-U | 2976 | —— | 10 | Echo, John Deere, & others | |
| 77-310-1 | N11YC | W8DC | BP5ES | W16EP-U/ | 54 | —— | 10 | Honda GVX120, GSX270, & GVX120 | |
| 77-311-1 | CJ6Y | WS5F | BPM7A | W22MP-U | —— | —— | 10 | Kawasaki TEX54, Tecumseh TCH300 | |
| 77-312-1 | RN9YC | —— | BPR6ES | W20ETR-S | 3923 | —— | 10 | **Resistor Plug** – Honda OHC Horiz. & Vert., Robin 8.5–25 HP EH & EHV | |
| 77-313-1 | J17LM | W9ECO | B4LM | W14LM-U | 295 | —— | 10 | Tecumseh HM70–HM100, AV520, AV600, TC300 | |
| 77-314-1 | RN11YC4 | WR8DS | BPR5ES | W16EPR-U, W16EXR-U | 54 | —— | 10 | **Resistor Plug** – Honda OHV GX120–670 & GVX50–620; Kawasaki OHV, FC150V, FC180V, & others; MTD snow throwers | |
| 77-315-1 | N9YC | W6D | BP6ES | W20EX-U | 4253 | —— | 10 | Honda OHC Horiz. & Vert.; Robin 8.5–25 HP EH, & EHV | |
| 77-316-1 | DJ6J | HS5E | BM7F | T22MU | 2954 | —— | 10 | Homelite mini models Super, E-Z, & EZ-AO; McCulloch 5-10A, MAC 10 series, & others | |
| 77-317-1 | J8C | W8E | B6S | W16S-U | 294 | —— | 10 | **Resistor Plug** – Tecumseh HH100, HH120, HH60, 70, 80, & Others | |
| 77-318-1 | DJ7Y | HS8E | BPM6F | WA20M-U | 2956 | —— | 10 | Homelite 180, 192, 200 (all models), CS40, DM40, LX30; McCulloch Eager Beaver | |
| 77-319-1 | RCJ8Y | —— | BPMR4A | W14PR-UID | —— | —— | 10 | **Resistor Plug** – Tecumseh horiz. 2-cycles: Snow King up to 5 HP, & others | |
| 77-321-1 | L86C | W8A | B6HS | W22FSU | 415 | —— | 10 | Honda 4.0 HP – 40, G40, G41, & G42; Honda 6.5 HP –G65 & GS65; Wisconsin OHV; Tecumseh OVM 120 | |
| 77-323-1 | N2C | W2C | B8ES | W22ESL | 2616 (NZC) | —— | 10 | Poulan, Ski Doo, & Yamaha Snowmobiles | |
| 77-324-1 | RCJ7Y | WSR9E | BPMR4A | W14MPR-410 | —— | —— | 10 | **Resistor Plug** – Alpina, Castor, Dynamark, Husqvarna, Jonsered, Lombard, Olympyk, & Solo chainsaws | |

(All spark plugs are priced individually but sold only in standard packs of 10.
Order by total number of pieces required - not standard pack.)
**PLEASE CHECK OWNER'S MANUAL FOR EXACT REPLACEMENT**

S

## Spark Plugs for 4-Cycle Hand Held Equipment

**77-355-1** Stihl 0000 400 7009 **Spark Plug**
For 4-cycle hand-held equipment

# Spark Plugs

| OREGON | Replaces | Description | Product Code |
|---|---|---|---|

## Spark Plug Accessories

| | | | |
|---|---|---|---|
| **36-425** | Echo 159012-03433 | **Spark Plug Boot** - NEW<br>For Echo Chain Saws & Power Blowers | |
| **36-423** | Echo A27000013 | **Spark Plug Boot** - NEW<br>Fits Echo PB265L & PPT265S | |
| **36-424** | Echo 159012-01620 | **Spark Plug Boot** - NEW<br>Fits Echo Chainsaws 280, 300, & 3000 | |
| **33-200** | NGK VBOF 8032 45 | **Spark Plug Boot**<br>For overhead valve engines | |
| **33-208** | Homelite A55373-A | **Spark Plug Boot with Spring**<br>5mm for trimmers and chainsaws | |
| **33-215** | Honda 30700-ZE1-000<br>Honda 30700-ZE1-013 | **Spark Plug Boot**<br>Used on GX110-GX390 | |
| **33-216** | Honda 30700-ZJ1-841<br>Honda 30700-ZJ1-003 | **Spark Plug Boot**<br>Used on GX120, GX610, GX620,<br>GX670, GXV610, & GXV620 | |
| **33-516** | Kawasaki 21130-0256<br>Shindaiwa 22102-72220<br>Kawasaki 20010-72221<br>Mitsubishi TR64961 | **Spark Plug Boot with Spring**<br>Fits Kawasaki TD26, TD40, TD43, & TD48<br>Fits Shindaiwa T25, T27, & C35<br>Fits Mitsubishi TL26, TL33, TL43, & T200 | |
| **36-422** | Stihl 4128-405-1000 | **Spark Plug Boot** - NEW<br>Fits Stihl FS350, 400, 450, & 480 | |
| **36-427** | Makita 957-604-240 | **Spark Plug Boot** - NEW<br>Fits Makita DPC series | |

S

| OREGON | Replaces | Description | Product Code | |
|---|---|---|---|---|

## Spark Plug Accessories

| | | | |
|---|---|---|---|
| **36-428** | Red Max 505 29 88-01 | **Spark Plug with Boot** - NEW<br>Fits Red Max 143RII, 226R, 226RJ,<br>236R, 532RBS Brush cutter | |
| **33-210** | | **Spark Plug Boot**<br>Fits most spark plugs<br>Protects plug from moisture<br>Eliminates shock<br>Positive connection | |
| **42-452** | | **Spark Plug Wrench**<br>Fits 3/4" short plug and<br>13/16" regular plug 14 mm<br>Length: 4" | |
| **33-201** | | **Shorting Clip Bolt-on Style**<br>Use on all 14 mm spark plugs<br>Length: 3"<br>Zinc plated, pointed to penetrate plug boot | |

Can't find what you're looking for?
Try us online to search the latest products available.

OregonProducts.com

S

# Spark Plugs

| OREGON | Replaces | Description | Product Code |
|---|---|---|---|

OREGON Product Code

## AMF, Lawn Chief, Noma

### 82-493

**Replaces**

| | |
|---|---|
| AMF 51450 | Lawn Chief 094920 |
| AMF 56424 | Noma 307534 |
| AMF 39493 | Noma 779066 |
| Lawn Chief 015891 | |

**Description**

- Fits Dynamark mowers & Lawn Chief 1239 with 36", 38", 39", 40" & 42" decks
- Use with Oregon® 45-257 bearing
- Height: 6-1/2", Pulley Dia.: 5-1/2", Blade width: 2"

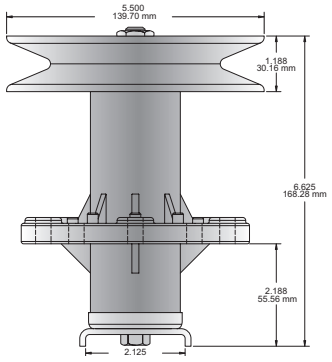

### 82-514

**Replaces**

| | |
|---|---|
| AMF 50334 | Noma 310240 |
| AMF 50335 | Noma 779057 |

**Description**

- For 32" & 42" decks
- Height: 6-1/4", pulley dia.: 4-3/4"
- Blade width: 2"
- Use with Oregon 45-257 bearing

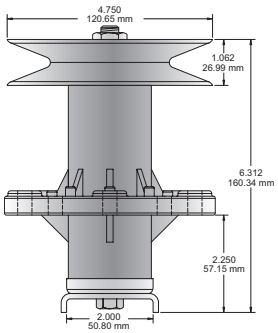

## Ariens

### 82-010

**Replaces**

| | | |
|---|---|---|
| 6444200 | 3485500 | 3625000 |
| 0341900 | 2526400 | 3615400 |
| 3037500 | 5412000 | |

**Description**

Complete spindle assembly combines all Ariens parts listed above. Ariens does not sell as a complete set.

- OD: 5", v-width: 5/8" pulley with shaft
- Fits most 40" decks LH side (large pulley)
- Includes housing, ball bearings, blade adaptor hub, spacer, washer, bearing slinger, & blade adaptor/trim

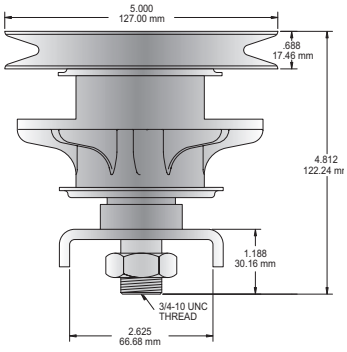

### 82-011

**Replaces**

| | | |
|---|---|---|
| 3615300 | 3485500 | 0341900 |
| 5412000 | 3625000 | 3037500 |
| 6444200 | 2526400 | |

**Description**

Complete spindle assembly combines all Ariens parts listed above. Ariens does not sell as a complete set.

- Fits most 40" decks RH side (small pulley)
- OD: 4-3/4", "V" width pulley with shaft: 5/8"
- Includes ball bearings, blade adaptor hub, blade adaptor/trim, washer, & bearing slinger

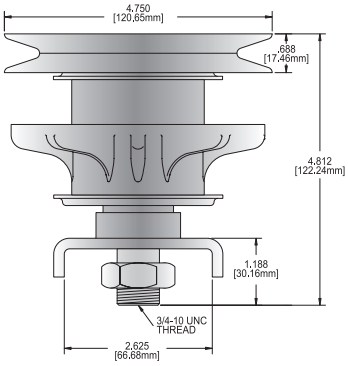

**IMPORTANT:** When installing spindles, follow all installation and maintenance instructions provided in the mowers owner/maintenance manual—including the correct torquing of the blade and pulley bolts/nuts as well as the lubrication of the spindle. Failure to do so may cause premature failure.

# Spindles

OREGON Product Code

## AYP

### 82-495

**Replaces**

121705X 106041X
106040X 121704X

**Description**

- Primary spindle on 44" cut models
- Right-hand spindle on 44" deck
- Use with Oregon® 45-257 bearing

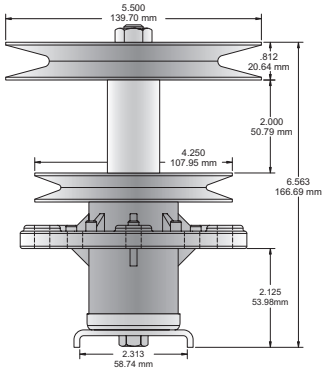

### 82-679

**Replaces**

121657X / 105477X 106038X / 121617X

**Description**

- Primary spindle
- Fits models 4200-14, 951940,
- 8208A29, & T52050A
- Center spindle on 50" cut - 20 HP
- Use with Oregon 45-257 bearing

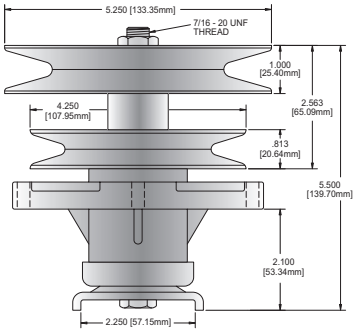

### 82-680

**Replaces**

136819 / 121622X 106037X
136818 / 105483X

**Description**

- Secondary spindle
- Fits models GT2500RB, GT2500CR, RL1844B, PC1844A, 4200-14, 8208A29, 951940, & 752050A
- Center & left spindle on 44" cut
- Outer spindle on 50" cut - 20 HP
- Use with Oregon 45-257 bearing
- 2 required

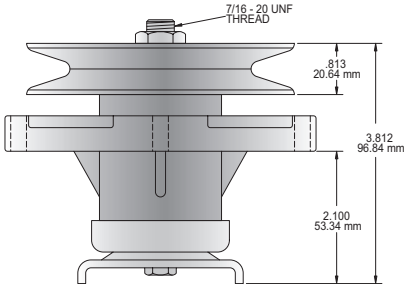

| OREGON | Replaces | Description | Product Code |
|---|---|---|---|
| 02-301 | AYP 17490612 | Self-tapping bolts to mount our quill 82-493, 82-495, 82-677, 82-678, 82-679, 82-680 & 82-514 to mower deck 3/8-16 x 1" | |
| 02-304 | AYP 173984 | Self-tapping bolt to mount our 82-225 spindle to the mower deck 5/16-18 x1-1/4" | |
| 04-001 | AYP 129729<br>AYP 139729 | Nut for pulley. Use on our quill 82-225 & shaft 85-017 on 36", 38" & 42" ventilated decks | |
| 09-260 | AYP 187690 | Spindle washer 43/64" ID, 1-1/8" OD 5/32" Thickness | |

S



**IMPORTANT:** When installing spindles, follow all installation and maintenance instructions provided in the mowers owner/maintenance manual—including the correct torquing of the blade and pulley bolts/nuts as well as the lubrication of the spindle. Failure to do so may cause premature failure.

OREGON Product Code

## AYP

**82-225**

**Replaces**
130794

**Description**
- Fits 36", 38" & 42" ventilated decks with star blade mount
- Includes pulley nut, blade bolt, & washer
- Top bearing: Oregon® 45-257
- Lower bearing: Oregon 45-259
- Shaft: Oregon 85-017
- Pulley: Oregon 44-370 or 44-371

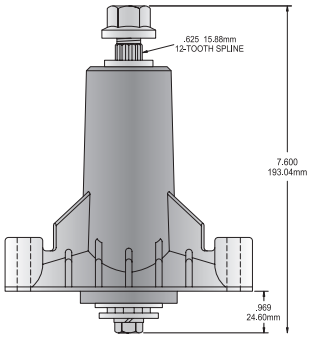

**82-225-B** **Bulk Pack:** 160 of Oregon 82-225

---

**82-220**

**Replaces:** 128774

**Description**
- Spindle housing
- For new models with star blade spindle
- Fits 36", 38" & 42" ventilated decks
- Use with Oregon 45-257 top bearing, 45-259 lower bearing

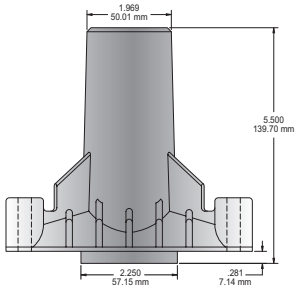

---

**82-024**

**Replaces**
Oregon 82-220

**Description**
- Heavy-duty version of 82-220
- Housing only 82-014

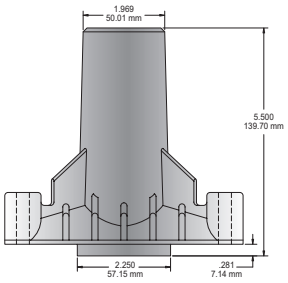

---

**82-014**

**Replaces**
130794

**Description**
- Heavy-duty version of Oregon 82-225
- Heavier, reinforced construction than OEM - HD bearings
- Fits 36", 38" & 42" ventilated decks
- For star blade mount
- Includes pulley nut, blade bolt, & washer
- Top bearing: Oregon 45-257
- Lower bearing: Oregon 45-259
- Shaft: Oregon 85-017
- Pulley: Oregon 44-370 or 44-371
- Tapped mounting holes

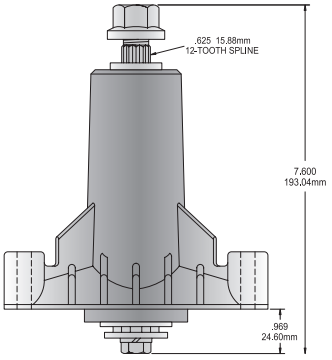

**82-014-B** **Bulk Pack:** 160 of Oregon 82-014

S

**IMPORTANT:** When installing spindles, follow all installation and maintenance instructions provided in the mowers owner/maintenance manual—including the correct torquing of the blade and pulley bolts/nuts as well as the lubrication of the spindle. Failure to do so may cause premature failure.

# Spindles

OREGON Product Code

## AYP, Husqvarna

### 82-510

**Replaces**
AYP 143651

**Description**
- Fits 44" & 50" decks
- For star center hole blades
- Use with Oregon® 45-259 & 45-257 bearings, 44-371 or 44-370 pulleys, 85-023 shaft

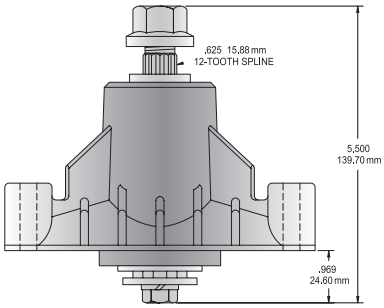

### 82-221

**Replaces**
AYP 137152

**Description**
- Spindle housing
- Fits 44" & 50" decks
- Use with Oregon 85-023 shaft, 45-259 & 45-257 bearings, 44-371 or 44-370 pulleys, 82-510 spindle

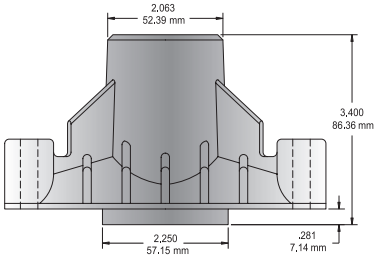

### 82-012

**Replaces**
AYP 174356 Husqvarna 587125201

**Description**
- Fits 48" decks (2001 & newer)
- Use Oregon 45-257 & 45-259 bearings, & 44-370 pulley

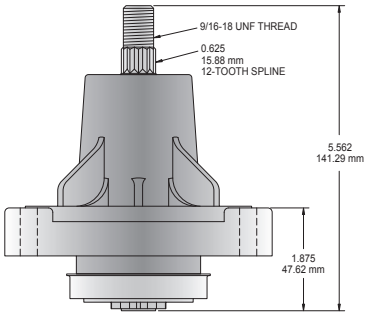

### 82-029

**Replaces**
AYP 187292 Husqvarna 532187292
AYP 192870 Husqvarna 587820301

**Description**
- Fits 54" decks
- Use with Oregon 45-257 & 45-259 bearings, 85-035 shaft, & 44-371 or 44-370 pulleys

**Note:** The only difference between 187292 and 192870 is that 187292 is greasable.

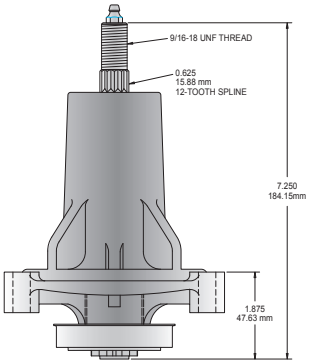

S



IMPORTANT: When installing spindles, follow all installation and maintenance instructions provided in the mowers owner/maintenance manual—including the correct torquing of the blade and pulley bolts/nuts as well as the lubrication of the spindle. Failure to do so may cause premature failure.

OREGON Product Code

## AYP, Husqvarna

**82-129** – NEW

**Replaces**
581650501

**Description**
- For Lawn Tractors
- Fits Husqvarna models, CTH 194, CTH 224T, CTCh 2646, CTH 2642TR, TC 238, & TC 242

---

**82-108** – NEW

**Replaces**

| | | |
|---|---|---|
| 187292 | 192870 | 539112057 |
| 192870 | 532187281 | 587125401 |
| 532192870 | 532187292 | 587253301 |
| 587125401 | 532192870 | |

**Description**
- For AYP 46", 48" & 54" decks
- 5 pt. star blade mount
- Height: 7"

## AYP

**82-126**

**Replaces**
187281

**Description**
- Housing only for Oregon® 82-026
- Fits 54" decks
- Use with Oregon 45-257 & 45-259 bearings, 85-035 shaft, & 44-371 or 44-370 pulleys

S

IMPORTANT: When installing spindles, follow all installation and maintenance instructions provided in the mowers owner/maintenance manual—including the correct torquing of the blade and pulley bolts/nuts as well as the lubrication of the spindle. Failure to do so may cause premature failure.

# Spindles

OREGON Product Code

## Bunton, Bobcat

### 82-306

**Replaces**

Bobcat 36006N
Kees 362024
Exmark 302030
Jacobsen 552188
Snapper 7-6379

**Description**

- Fits 32" & 36" decks
- Use with Oregon 45-220 bearings

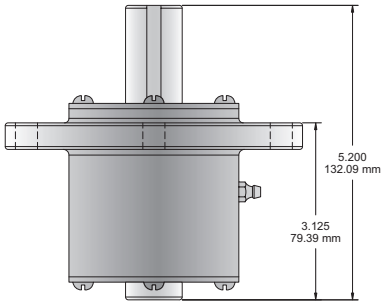

### 82-307-0

**Replaces**

Bobcat 36082N
Kees 482005
Exmark 402006
Jacobsen 552312
Snapper 7-6645

**Description**

- Fits 48" deck
- Use with Oregon 45-220 bearing

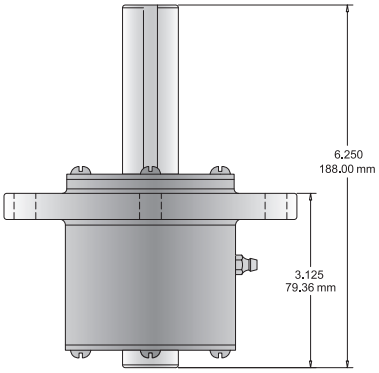

### 82-320

**Replaces**

Bobcat 36567

**Description**

- For 36" & 48" XM series mowers
- Use with Oregon 45-225 bearing
- Shaft length: 6-1/4"
- Shaft dia.: 1"

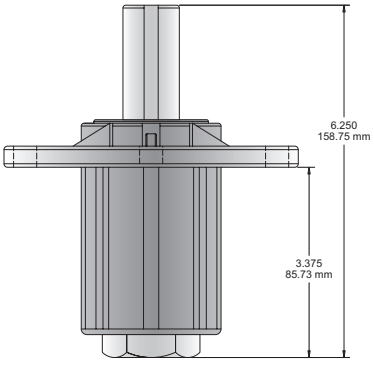

### 82-308

**Replaces**

Bunton PAL0806A
John Deere PT8633

**Description**

- Fits 36", 40", 48", 52", & 61"
- Shaft length: 6-1/2"
- Short hub
- Use with Oregon® 45-220 bearing

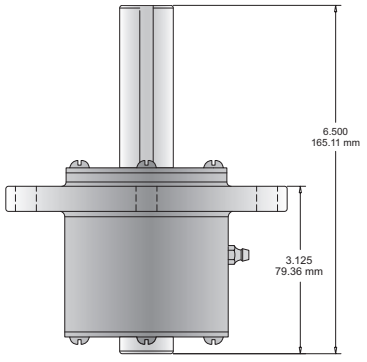

S



IMPORTANT: When installing spindles, follow all installation and maintenance instructions provided in the mowers owner/maintenance manual—including the correct torquing of the blade and pulley bolts/nuts as well as the lubrication of the spindle. Failure to do so may cause premature failure.

OREGON Product Code

## Bunton, Bobcat

### 82-016

**Replaces**
Bobcat 2720759 Bunton 2720759

**Description**
- Fits ZT223 with 52" deck, RH & LH sides
- Use with Oregon 45-225 bearing

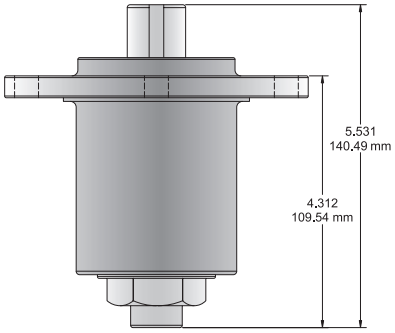

### 82-018

**Replaces**
Bobcat 2702758 Bunton 2702758

**Description**
- Fits ZT223 with 52" deck center spindle
- Use with Oregon 45-225 bearings

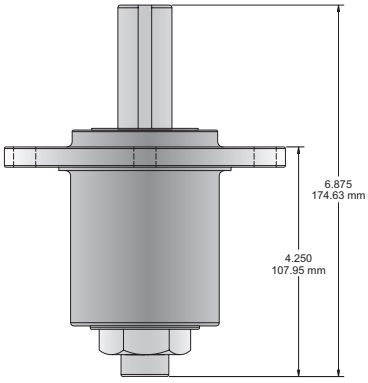

### 82-017

**Replaces**
Bobcat 2186207 Bunton 2186207

**Description**
- Fits ZT223 with 61" deck center spindle
- Use with Oregon 45-225 bearings

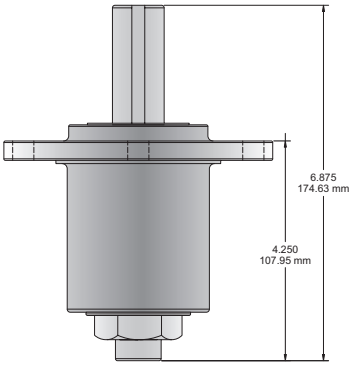

### 82-019

**Replaces**
Bobcat 2186205 Bunton 2186205

**Description**
- Fits ZT223 with 61" deck RH & LH sides
- Use with Oregon® 45-225 bearings

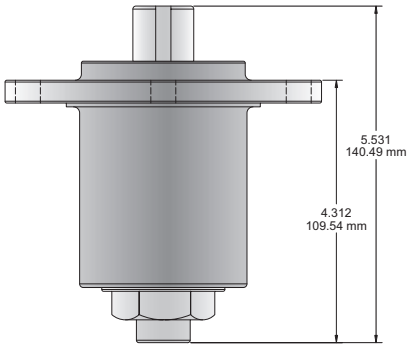

S

IMPORTANT: When installing spindles, follow all installation and maintenance instructions provided in the mowers owner/maintenance manual—including the correct torquing of the blade and pulley bolts/nuts as well as the lubrication of the spindle. Failure to do so may cause premature failure.

# Spindles

OREGON Product Code

## Bush Hog

**82-552**

**Replaces**
500048640

**Description**
- Fits PZ2861, PZ2561, TY3061 KH2, PZ3061 KH2, PZ2661 KW2, EC2561 KW, TD2661 KW, & EC2661 KW
- Includes 6" pulley & mounting plate

**82-553**

**Replaces**
500049843

**Description**
- Fits ES2252, TW2452 KW3, ES2452 KW3, ES2352 KH3, ES2352 KH3, TW2052 KH3, & ES2052 KH3
- Includes 5-1/4" pulley

**82-554**

**Replaces**
500049843

**Description**
- Fits ES2644, ES1744, ES2244, TW2044 KH3, & ES2044 KH3
- Includes 5" pulley

**82-555**

**Replaces**
99685

**Description**
- Fits TD-1100

S



IMPORTANT: When installing spindles, follow all installation and maintenance instructions provided in the mowers owner/maintenance manual—including the correct torquing of the blade and pulley bolts/nuts as well as the lubrication of the spindle. Failure to do so may cause premature failure.

OREGON Product Code

## Bush Hog

**82-557**

**Replaces**
50051388

**Description**
- Fits RDTH60, RDTH72, ATH600, ATH720, TD1500, & TD1700
- **Does not include** blade washer, lock washer, or blade bolt

**82-558**

**Replaces**
5005552

**Description**
- Aluminum housing
- Fits HS1736B, HS1742B, HS1836B, HS1842B, HS2036K, & HS2042K

## Caroni

**82-357**

**Replaces**
Caroni 30800

**Description**
- Fits most model decks
- Use with Oregon® 45-220 bearing

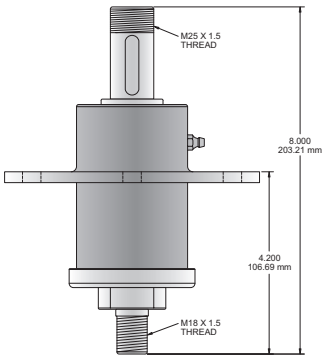

S

# Spindles

OREGON Product Code

## Cub Cadet (see also MTD)

### 82-405

**Replaces**

| | | |
|---|---|---|
| 918-0427C | 918-0324 | 618-0427C |
| 918-0427 | 618-0324 | 618-0427 |
| 618-0427A | 918-0427A | 618-0324A |

**Description**

- Fits 1170, 1600, 1800, & RZT mowers with 42" decks using star hole blades
- Use with Oregon 45-259 bearing & 85-044 spindle shaft

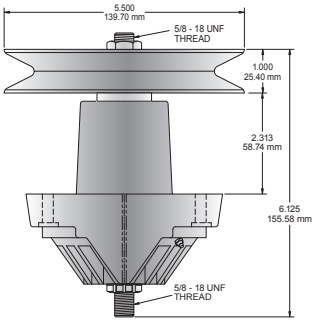

### 82-409

**Replaces**

| | |
|---|---|
| 918-0660 | 618-0660 |

**Description**

- Fits LT1045, LT1046, & i1046 with 46" decks using star hole blades
- Use with Oregon 45-259 bearing

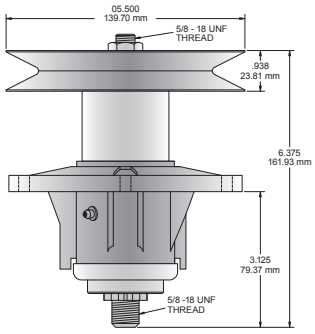

### 82-408

**Replaces**

| | |
|---|---|
| 918-0659 | 618-0624 |
| 618-0659 | 918-0624 |

**Description**

- Fits LT1040, LT1042 & RZT with 42" decks using star hole blades
- Use with Oregon 45-259 bearing & 85-044 spindle shaft

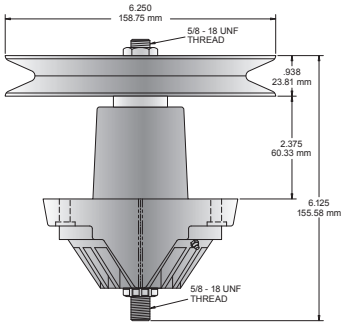

### 82-411

**Replaces** 918-3129C, 618-3129A, 618-3129B, 918-3129A, 918-3129B, 618-3129, 618-3129C, 918-3129

**Description**

- Fits Z-Force, GT series, & LT series mowers with 38" & 42" deck using round hole blade
- Use with Oregon 45-205 bearing & 45-206 race

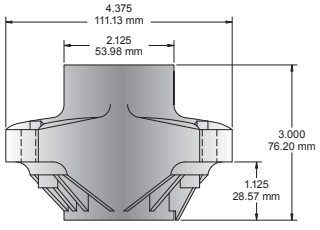

S



IMPORTANT: When installing spindles, follow all installation and maintenance instructions provided in the mowers owner/maintenance manual—including the correct torquing of the blade and pulley bolts/nuts as well as the lubrication of the spindle. Failure to do so may cause premature failure.

OREGON Product Code

## Cub Cadet (see also MTD)

### 82-044

**Replaces**
918-3167 618-3167

**Description**
- Fits some 38" decks

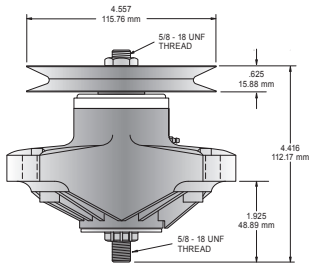

### 82-401

**Replaces**
918-04123B 618-04123B

**Description**
- Fits LT series mowers with 46" deck
- Round blade center hole
- Use with Oregon 45-205 bearing & 45-206 race

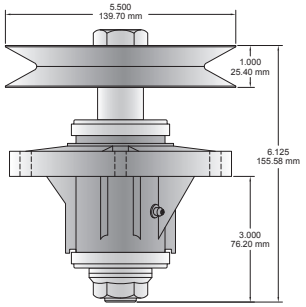

### 82-402

**Replaces**
918-04124A 618-04124A

**Description**
- Fits LT series mowers with 42" deck using round hole blade
- Use with Oregon 45-205 bearing & 45-206 race

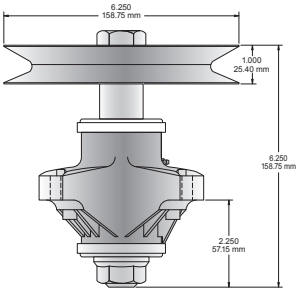

### 82-403

**Replaces**
918-04126A 918-04126 618-04125
618-04126A 618-04126 918-04125

**Description**
- Fits i1050, LT, SLT & RZT mowers with 50" deck using star center hole blade
- Use with Oregon 45-259 bearing

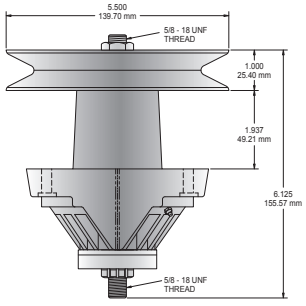

### 82-412

**Replaces**
918-04129 618-04129

**Description**
- Fits LT1000 series 50' decks using round center hole blade
- Use with Oregon® 45-205 bearing & 45-206 race

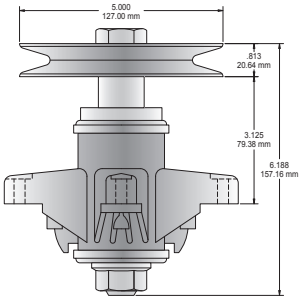

**IMPORTANT: When installing spindles, follow all installation and maintenance instructions provided in the mowers owner/maintenance manual—including the correct torquing of the blade and pulley bolts/nuts as well as the lubrication of the spindle. Failure to do so may cause premature failure.**

# Spindles

OREGON Product Code

## Cub Cadet (see also MTD)

### 82-406

**Replaces**

| | |
|---|---|
| 618-04394 | 918-04394 |
| 618-04426 | 918-04426 |

**Description**

- Fits Z-Force mowers with 48" thru 60" deck using round hole blade. Use with Oregon 45-205 bearing & 45-206 race

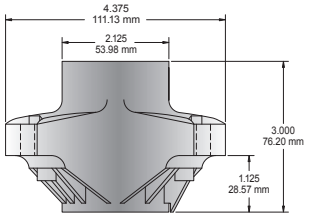

### 82-407

**Replaces**

| | |
|---|---|
| 918-04461 | 618-04456 |
| 618-04461 | 918-04456 |

**Description**

- Fits LT series mowers with 42" deck using star hole blade
- Use with Oregon 45-259 bearing & 85-047 spindle shaft

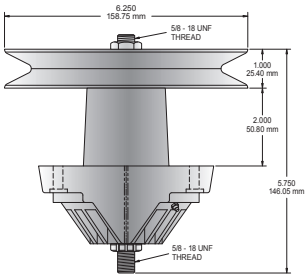

### 82-058

**Replaces**

| | | |
|---|---|---|
| 918-04822A | 918-04889 | 618-04889A |
| 918-04822 | 618-04822A | 618-04889 |
| 918-04889A | 618-04822 | |

**Description**

- Fits mower models CC30 Mini Rider (2014), LTX1040 (2011–2014), LTX1042 (2012–2014), LTX1045 (2011), RZT-42, RZT-L42, & RZT-S42 (2011–2014)
- For star center hole blades

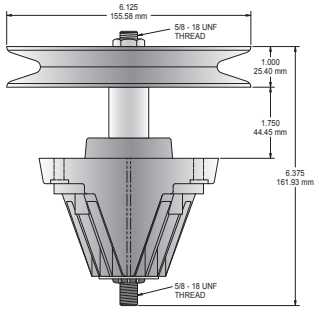

### 82-043

**Replaces**

| | |
|---|---|
| 918-05016 | 918-04825 |
| 618-05016 | 618-04825B |

**Description**

- Fits models LTX1050 with 50" deck (2011-2013)

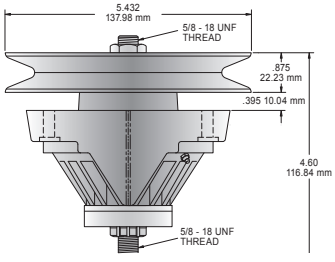

### 82-130 – NEW

**Replaces**

918-05137

**Description**

- Fits Cub CadetRZT-S54, MTD Z6600 & ZT-L54, Toro 13AX90RS848 & 13AX91RS848, Troy-Bilt Mustang 54 XP
- Height: 6-15/16", pulley outer diameter: 5-11/16"
- 6 pt. star blade mount

S



IMPORTANT: When installing spindles, follow all installation and maintenance instructions provided in the mowers owner/maintenance manual—including the correct torquing of the blade and pulley bolts/nuts as well as the lubrication of the spindle. Failure to do so may cause premature failure.

OREGON Product Code

## Cub Cadet (see also MTD)

**82-128** – NEW

**Replaces**
918-04865A

**Description**
- Fits Cub Cadet LTX1045, LTX1046 & Z-force S 46; MTD 13AL771T004, 13AL78ST099, 13AL78ST299, 13AL795T004, 13AL795T057, 13AO785T058, 13AR91PT099, 13AR91PT299, 13AT915T004, 13AX771T004, 13AX791T031, 13AX90YT001, 13AX915T004, & 13WX791T031
- Height: 6", pulley outer diameter: 6-1/2"
- 6 pt. star blade mount
- Pulley and grease zerk included

**82-127** – NEW

**Replaces**
918-06989

**Description**
- Fits MTD13AL78XT099, 13AL78XT299, & 13AL78XT055; Troy-Bilt TB46 & Horse XP
- Height: 6-3/4", pulley outer diameter: 6-1/4"
- Includes nut, spacer, & pulley.
- 6 pt. star blade mount
- No threads in housing, use self-tapping screws

**82-132** – NEW

**Replaces**
918-05078A

**Description**
- Fits Cub Cadet RZT-S46, MTD ZT-S46; Troy-Bilt Mustang XP 46 & Mustang Pivot S 46
- Height: 7-1/4" height, pulley outer diameter: 6-7/16"
- 6 pt. star blade mount

**82-104** – NEW

**Replaces**

| | |
|---|---|
| 618-06976 | 918-06976 |
| 618-06976A | 918-06976A |

**Description**
- Fits Cub Cadet LT42, LT42C, & LX42 with 42" deck; MTD 131PA1ZS099, CYT4220, & CYT4220SE with 42" deck
- Thread: 5/8"-18 UNG
- 6 pt. star blade mount
- Height: 6-3/16", pulley outer diameter: 5-1/2"

S

**IMPORTANT:** When installing spindles, follow all installation and maintenance instructions provided in the mowers owner/maintenance manual—including the correct torquing of the blade and pulley bolts/nuts as well as the lubrication of the spindle. Failure to do so may cause premature failure.

# Spindles

OREGON Product Code

## Cub Cadet (see also MTD)

**82-105** – NEW

**Replaces**
918-06977
918-06977A

**Description**
- Fits Cub Cadet LT46 & LX46 with 46" deck; MTD 131AQ1ZT099, 13AQA1ZT299, & CYT4622SE with 46" deck
- Thread: 5/8"-18 UNG
- 6 pt. star blade mount
- Height: 6-1/4", pulley outer diameter: 6-1/4"

**82-106** – NEW

**Replaces**
618-06981
918-06981

**Description**
- Fits Cub Cadet XT1-LT50 & XT2-LX50 with 50" deck; MTD CYT5023SE with 50" deck
- Thread: 5/8"-18 UNG
- 6 pt. star blade mount
- Height: 6", pulley outer diameter: 5"

**82-110** – NEW

**Replaces**

| | | |
|---|---|---|
| 618-04456 | 918-04456 | 918-04461 |
| 618-04456A | 918-04456A | 918-04461A |
| 618-04461 | 918-04456B | Toro 112-0460 |

**Description**
- Fits Cub Cadet LT1042; MTD Newer 700 series with 42" deck; Toro LX420 & LX425 (2006–2007)
- 6 pt. star blade mount
- Height: 5-3/4", pulley outer diameter: 6-1/4"

S



IMPORTANT: When installing spindles, follow all installation and maintenance instructions provided in the mowers owner/maintenance manual—including the correct torquing of the blade and pulley bolts/nuts as well as the lubrication of the spindle. Failure to do so may cause premature failure.

OREGON Product Code

## Cub Cadet (see also MTD)

**82-109** – NEW

**Replaces**

| | | |
|---|---|---|
| 618-04636 | 618-04865 | 918-04865A |
| 618-04636A | 618-04865A | |

**Description**

- Fits Cub Cadet LTX1045, LTX1046, & Z-force S 46; MTD 13AL771T004, 13AL78ST099, 13AL78ST299, 13AL795T004, 13AL795T057, 13AO785T058, 13AR91PT099, 13AR91PT299, 13AT915T004, 13AX771T004, 13AX791T031, 13AX90YT001, 13AX915T004, & 13WX791T031
- 6 pt. star blade mount
- Pulley and grease zerk included
- Height: 6", pulley outer diameter: 6-1/2"

## Dixie Chopper

**82-322**

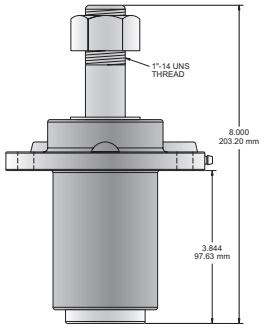

**Replaces**
10161

**Description**

- Fits 50" & 60" rider
- LH & RH Spindle
- Use with Oregon® bearing 45-263

**82-323**

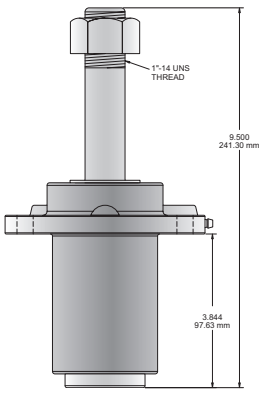

**Replaces**
10161-L

**Description**

- Long shaft
- Fits 50" & 60" rider
- Center spindle
- Use with Oregon bearing 45-263

## Dixon

**82-340**

**Replaces**
8340

**Description**

- RH on 42" deck
- Use with Oregon 45-225 bearings

**IMPORTANT: When installing spindles, follow all installation and maintenance instructions provided in the mowers owner/maintenance manual—including the correct torquing of the blade and pulley bolts/nuts as well as the lubrication of the spindle. Failure to do so may cause premature failure.**

# Spindles

OREGON Product Code

## Dixon

**82-341**

**Replaces**
8398

**Description**
- LH on 42" deck
- Use with Oregon 45-225 bearings

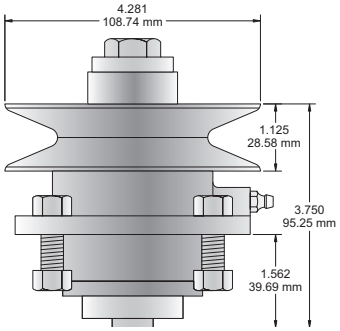

**82-342**

**Replaces**
8399

**Description**
- Center for 42" decks
- Use with Oregon® 45-225 bearings

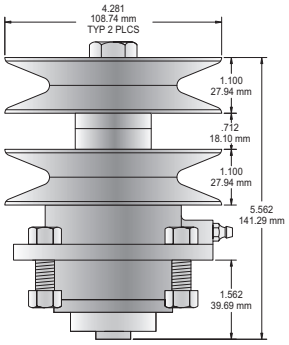

## Excel

**82-021**

**Replaces**
350595

**Description**
- Fits Super Z with 52", 60", & 72" decks, cast iron housing, used before serial number 05011098
- Use with Oregon 45-225 bearings

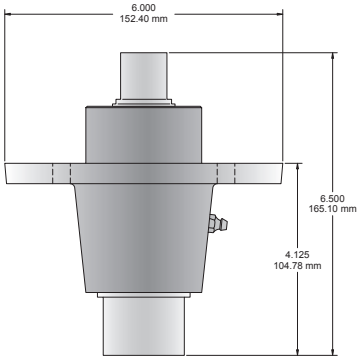

## Exmark

**82-318**

**Replaces**
634972

**Description**
- For Laser Z 60" deck serial numbers 252,000 & up
- Use with Oregon 45-225 bearings

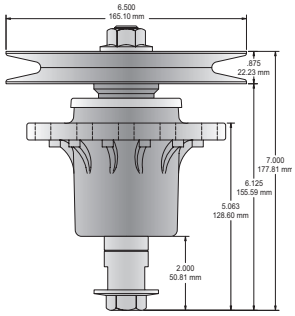

S



IMPORTANT: When installing spindles, follow all installation and maintenance instructions provided in the mowers owner/maintenance manual—including the correct torquing of the blade and pulley bolts/nuts as well as the lubrication of the spindle. Failure to do so may cause premature failure.

OREGON Product Code

## Exmark

### 82-344

**Replaces**
103-1140

**Description**
- Fits 60" decks on Lazer Z HP models serial numbers 260,000 to 351,999
- Use with Oregon 45-263 bearings

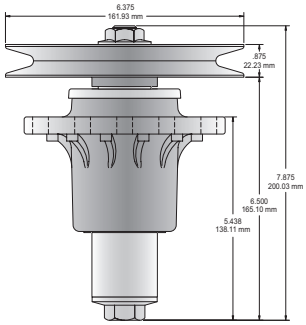

### 82-346

**Replaces**
103-1184

**Description**
- Fits 52" decks on Lazer Z HP models serial numbers 260,000 to 369,999
- Use with Oregon® 45-263 bearings

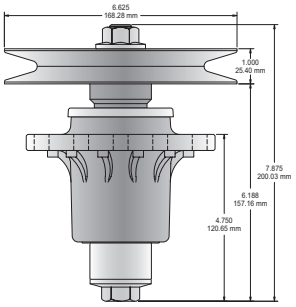

### 82-347

**Replaces**
103-3200 103-8323 103-8075

**Description**
- Fits 60" decks on Lazer Z, XP series models serial numbers 352,000 to 539,999
- Use with Oregon 45-263 bearings

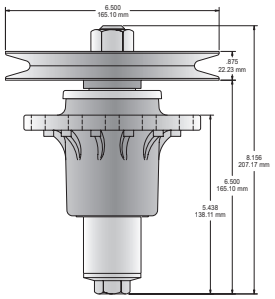

### 82-348

**Replaces**
103-3206

**Description**
- Fits 72" decks on Lazer Z. XP series models, serial numbers 352,000 to 539,999
- Use with Oregon 45-263 bearings

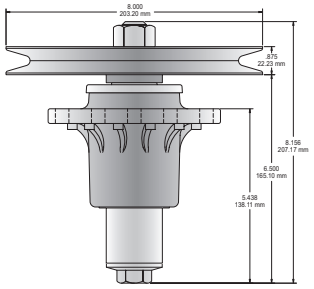

S

**IMPORTANT: When installing spindles, follow all installation and maintenance instructions provided in the mowers owner/maintenance manual—including the correct torquing of the blade and pulley bolts/nuts as well as the lubrication of the spindle. Failure to do so may cause premature failure.**

# Spindles

OREGON Product Code

## Exmark

**82-349**

**Replaces**
644092

**Description**
- Fits 72" deck on Lazer Z models serial numbers 260,000 to 351,999
- Use with Oregon 45-263 bearings

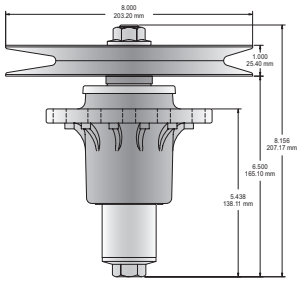

**82-022**

**Replaces**

| | |
|---|---|
| 103-2547 | 103-8280 |
| 1-513016 | 1-634619 |

**Description**
- Fits newer models Lazer Z, Metro, Viking, Turf Trace, & Turf Ranger decks
- Bearings & spacers included, use with Oregon 45-263 bearing
- Pulley & shaft are **not** included

**82-056**

**Replaces**
103-9539

**Description**
- Fits Lazer XS Air Cooled (S/N 790,000 & up), Lazer Z AC, Lazer Z HP, Lazer Z XS Air Cooled, Lazer Z XS Diesel, Lazer Z XS Liquid Cooled (S/N 600,000 & up), LZDS902K, LZD25KD605, LZDKD725, LZS29PKA606, LZX23KC486, LZX23KC486, LZX24KA526, LZX27KC526, LZX27KC606, LZX29EKC606, LZX29KA606, LZX34KC606, LZX34KC726, LZX38KC606, LZX34KC726, LZX38KC606, LZX38KC726 (S/N 920,000 & up), LZX801KA606, LZX740KC526, LZX740KC606, LZX980KC726, LZX980KC606, LZX940KC606, LZX749EKC606, LZX680KC486 (S/N 312,000,000 & up), LZX980EKC726 (S/N 313,000,000 & up), & Next Lazer Z Air Cooled (S/N 850,000 & up)

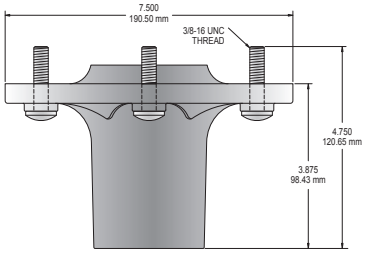

**48-235**

**Replaces**
103-3037

**Description**
- Splined Blade Bushing
- For mowers using blades with 15/16" center hole

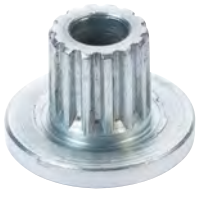

S



IMPORTANT: When installing spindles, follow all installation and maintenance instructions provided in the mowers owner/maintenance manual—including the correct torquing of the blade and pulley bolts/nuts as well as the lubrication of the spindle. Failure to do so may cause premature failure.

OREGON Product Code

## Exmark

### 82-361

**Replaces**
109-2102

**Description**
- Fits Lazer Z with serial No. 600,000 & greater
- Includes blade & pulley mounting hardware

See *Chart A* for pulley fit-up information

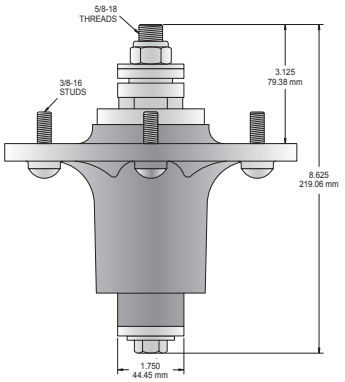

### 82-055

**Replaces**
109-6917

**Description**
- Fits Lazer Z with serial No. 600,000 & greater
- Simular to Oregon 82-361
  **No mounting hardware**

See *Chart A* for pulley fit-up information

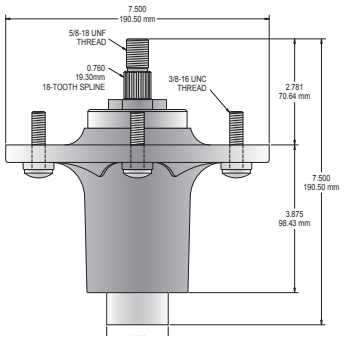

## Chart A — Pulley Fit-Up for Spindle 82-361 or 82-055

Use this table to combine Oregon® 82-361 or 82-055 with an Oregon pulley.

| | | | Deck Size: | 52" | 60" | | 66" | 72" | |
|---|---|---|---|---|---|---|---|---|---|
| | | | OD: | 6.75" | 6.13" | 7.25" | 6.75" | 6.75" | 7.25" |
| | Mounting Hardware | | | Pulley No. | | | | | |
| Exmark Model | Yes | No | | 44-505 | 44-506 | 44-502 | 44-504 | 44-501 | 44-503 |
| Lazer XS Air Cooled S/N 850,000 & Up | 82-361 | 82-055 | | | ● | | ● | | ● |
| Lazer Z XS Air Cooled S/N 790,000 & Up | 82-361 | 82-055 | | | ● | | ● | | ● |
| Lazer Z XS Diesel Mowers S/N 790,000 & Up | 82-361 | 82-055 | | | ● | | ● | | ● |
| LZD25KD605 S/N 920,000 & Up | 82-361 | 82-055 | | | ● | | | | |
| LZD25KD725 S/N 920,000 & Up | 82-361 | 82-055 | | | | | | | ● |
| LZDS902K605 S/N 312,000,000 & Up | 82-361 | 82-055 | | | ● | | | | |
| LZDS902K605 S/N 313,000,000 & Up | 82-361 | 82-055 | | | ● | | | | |
| LZDS902K60RD S/N 313,000,000 & Up | 82-361 | 82-055 | | | | ● | | | |
| LZDS902K725 S/N 312,000,000 & Up | 82-361 | 82-055 | | | | | | | ● |
| LZDS902K725 S/N 313,000,000 & Up | 82-361 | 82-055 | | | | | | | ● |
| LZDS902K72RD S/N 313,000,000 & Up | 82-361 | 82-055 | | | | | | ● | |
| LZS29PKA606 S/N 920,000 & Up | 82-361 | 82-055 | | | | ● | | | |
| LZX23KC486 S/N 920,000 & Up | 82-361 | 82-055 | | | | | | | |
| LZX24KA526 S/N 920,000 & Up | 82-361 | 82-055 | | ● | | | | | |
| LZX24KA526CA S/N 920,000 & Up | 82-361 | 82-055 | | ● | | | | | |
| LZX27KC526 S/N 920,000 & Up | 82-361 | 82-055 | | ● | | | | | |
| LZX27KC526CA S/N 920,000 & Up | 82-361 | 82-055 | | ● | | | | | |
| LZX27KC606 S/N 920,000 & Up | 82-361 | 82-055 | | | | ● | | | |
| LZX27KC606CA S/N 920,000 & Up | 82-361 | 82-055 | | | | ● | | | |
| LZX29EKC606 S/N 920,000 & Up | 82-361 | 82-055 | | | | ● | | | |

**IMPORTANT:** When installing spindles, follow all installation and maintenance instructions provided in the mowers owner/maintenance manual—including the correct torquing of the blade and pulley bolts/nuts as well as the lubrication of the spindle. Failure to do so may cause premature failure.



S

# Spindles

## Chart A — Pulley Fit-Up for Spindle 82-361 or 82-055

Use this table to combine Oregon® 82-361 or 82-055 with an Oregon pulley.

| | | | Deck Size: | 52" | 60" | | 66" | 72" | |
|---|---|---|---|---|---|---|---|---|---|
| | | | OD: | 6.75" | 6.13" | 7.25" | 6.75" | 6.75" | 7.25" |
| | Mounting Hardware | | | Pulley No. | | | | | |
| Exmark Model | Yes | No | | 44-505 | 44-506 | 44-502 | 44-504 | 44-501 | 44-503 |
| LZX29EKC606CA S/N 920,000 & Up | 82-361 | 82-055 | | | | ● | | | |
| LZX29EKC606SS S/N 920,000 & Up | 82-361 | 82-055 | | | | ● | | | |
| LZX29KA606 S/N 920,000 & Up | 82-361 | 82-055 | | | | ● | | | |
| LZX29KA606SS S/N 920,000 & Up | 82-361 | 82-055 | | | | ● | | | |
| LZX34KC606 S/N 920,000 & Up | 82-361 | 82-055 | | | | ● | | | |
| LZX34KC606SS S/N 920,000 & Up | 82-361 | 82-055 | | | | ● | | | |
| LZX34KC726 S/N 920,000 & Up | 82-361 | 82-055 | | | | | | ● | |
| LZX34KC726SS S/N 920,000 & Up | 82-361 | 82-055 | | | | | | ● | |
| LZX38KC606 S/N 920,000 & Up | 82-361 | 82-055 | | | | ● | | | |
| LZX38KC606CA S/N 920,000 & Up | 82-361 | 82-055 | | | | ● | | | |
| LZX38KC606SS S/N 920,000 & Up | 82-361 | 82-055 | | | | ● | | | |
| LZX38KC726 S/N 920,000 & Up | 82-361 | 82-055 | | | | | | ● | |
| LZX38KC726CA S/N 920,000 & Up | 82-361 | 82-055 | | | | | | ● | |
| LZX38KC726SS S/N 920,000 & Up | 82-361 | 82-055 | | | | | | ● | |
| LZX680KC486 S/N 312,000,000 & Up | 82-361 | 82-055 | | | | | | | |
| LZX740EKC526 S/N 313,000,000 & Up | 82-361 | 82-055 | | ● | | | | | |
| LZX740KC526 S/N 312,000,000 & Up | 82-361 | 82-055 | | ● | | | | | |
| LZX740KC606 S/N 312,000,000 & Up | 82-361 | 82-055 | | | | ● | | | |
| LZX740KC606CA S/N 312,000,000 & Up | 82-361 | 82-055 | | | | ● | | | |
| LZX749EKC606 S/N 312,000,000 & Up | 82-361 | 82-055 | | | | ● | | | |
| LZX801KA606 S/N 312,000,000 & Up | 82-361 | 82-055 | | | | ● | | | |
| LZX801KA606 S/N 313,000,000 & Up | 82-361 | 82-055 | | | | ● | | | |
| LZX801KA606SS S/N 312,000,000 & Up | 82-361 | 82-055 | | | | ● | | | |
| LZX940EKC606 S/N 313,000,000 & Up | 82-361 | 82-055 | | | | ● | | | |
| LZX940KC606 S/N 312,000,000 & Up | 82-361 | 82-055 | | | | ● | | | |
| LZX940KC726 S/N 312,000,000 & Up | 82-361 | 82-055 | | | | | | ● | |
| LZX980EKC726 S/N 313,000,000 & Up | 82-361 | 82-055 | | | | | | ● | |
| LZX980KC606 S/N 312,000,000 & Up | 82-361 | 82-055 | | | | ● | | | |
| LZX980KC606 S/N 313,000,000 & Up | 82-361 | 82-055 | | | | ● | | | |
| LZX980KC726 S/N 312,000,000 & Up | 82-361 | 82-055 | | | | | | ● | |
| LZX980KC726 S/N 313,000,000 & Up | 82-361 | 82-055 | | | | | | ● | |
| Next Lazer Z Air Cooled S/N 790,000 & Up | 82-361 | 82-055 | | ● | | ● | | ● | |
| Next Lazer Z Air Cooled S/N 850,000 & Up | 82-361 | 82-055 | | ● | | ● | | ● | |
| Next Lazer Z Propane S/N 850,000 & Up | 82-361 | 82-055 | | | | ● | | | |

## Exmark

**82-101** – NEW

**Replaces**
120-6234

**Description**

- Fits ECKA30; Toro 30" TimeMaster
- Height: 4"

S

OREGON Product Code

## Exmark

**82-102** – NEW

**Replaces**
116-3344

**Description**
- Cutter housing with bearings
- Fits Lazer Z E-Series, Pioneer S-Series, Turf Tracer S-Series, & Vantage S-Series
- Height: 4-1/2"

**82-103** – NEW

**Replaces**
126-4630

**Description**
- Cutter housing complete
- Fits RAE708, RAS710, RAS720, & RAS740
- Height: 4-1/2"

## Ferris

**82-350**

**Replaces**
30301

**Description**
- Fits IS-1000Z, IS-3000Z, & IS-4000Z Hydrowalk DDS series, & Simplicity ZT2148 & ZT2350 models
- Use with Oregon® 45-220 bearings

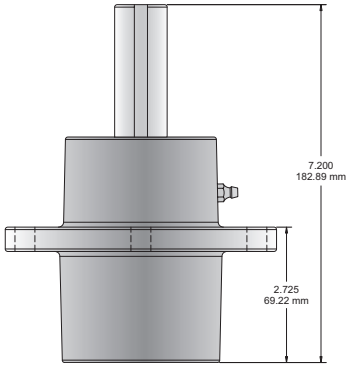

Can't find what you're looking for?
Try us online to search the latest products available.

OregonProducts.com

S

IMPORTANT: When installing spindles, follow all installation and maintenance instructions provided in the mowers owner/maintenance manual—including the correct torquing of the blade and pulley bolts/nuts as well as the lubrication of the spindle. Failure to do so may cause premature failure.

# Spindles

OREGON Product Code

## Grasshopper

**82-351**

**Replaces**
623781

**Description**
- Fits left & right on 52" & 61" decks on models 9852 & 9861
- Includes mounting hardware
- Use with Oregon 45-220 bearings

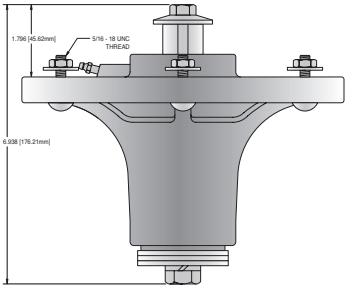

**82-352**

**Replaces**
623782

**Description**
- Fits center of 52" & 61" decks on 9652 & 9661 models
- Includes mounting hardware
- Use with Oregon 45-220 bearings

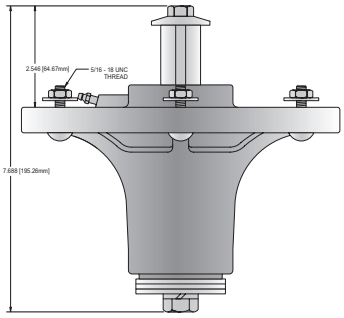

## Gravely

**82-040**

**Replaces**
51510000

**Description**
- Spindle assembly
- Fits ZT series riders
- Use with Oregon 45-002

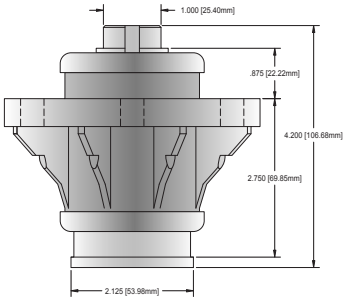

**82-041**

**Replaces**
59201000

**Description**
- Spindle assembly
- Fits PM series riders
- RH & LH spindle
- Use with Oregon® 45-263 bearings

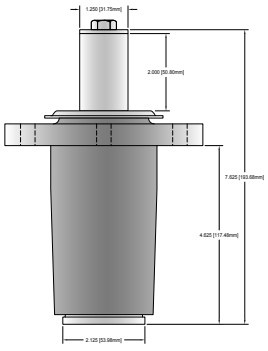

S



**IMPORTANT:** When installing spindles, follow all installation and maintenance instructions provided in the mowers owner/maintenance manual—including the correct torquing of the blade and pulley bolts/nuts as well as the lubrication of the spindle. Failure to do so may cause premature failure.

OREGON Product Code

## Gravely

**82-042**

**Replaces**
59202600 59225700

**Description**
- Spindle assembly
- Fits PM series riders
- Center spindle
- Use with Oregon 45-263 bearings

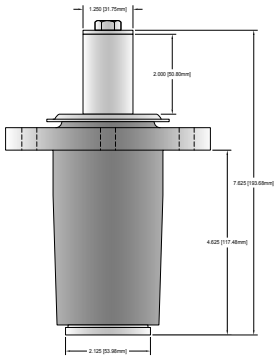

## Great Dane, Gilson, Lawn Boy

**82-328**

**Replaces**
Great Dane D18030

**Description**
- Use with Oregon 45-220 bearings

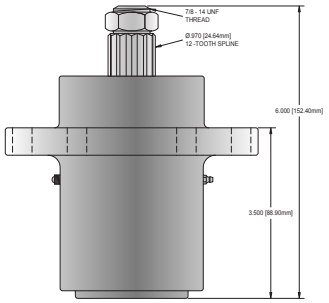

**82-013**

**Replaces**
Gilson 241013 Lawn Boy 741311
Gilson 88272 Lawn Boy 741310
Gilson 88213 Lawn Boy 706623
Lawn Boy 742577

**Description**
- For 38" cut, side discharge, single-bolt mount blades
- Overall height 5-3/16"
- Blade saddle: 2-1/2"

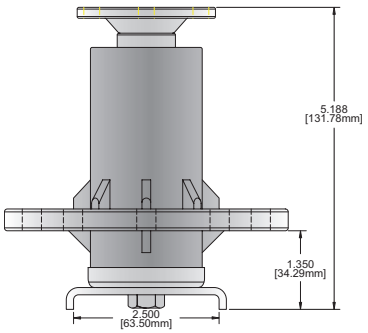

## John Deere

**82-332**

**Replaces**
AM108925

**Description**
- For 38" deck on LX & GT series tractors
- Use with Oregon® 45-295 bearings

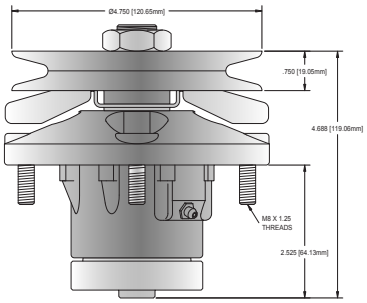

S

# Spindles

OREGON Product Code

## John Deere

### 82-333

**Replaces**
AM121342

**Description**
- For 48" & 54" deck on LX & GT series tractors
- Use with Oregon 45-259 bearings

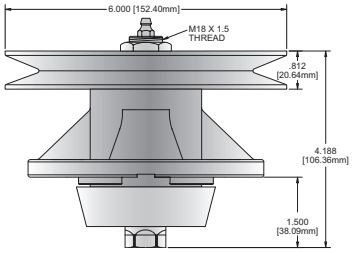

### 82-354

**Replaces**
AM124511

**Description**
- Fits 38" decks on STX38
- Use with Oregon 45-257 bearings

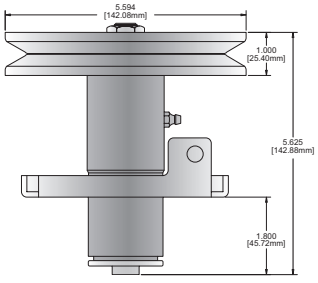

### 82-355

**Replaces**
AM126226

**Description**
- Fits 46" decks on LT166 lawn tractors
- Use with Oregon 45-257 bearings

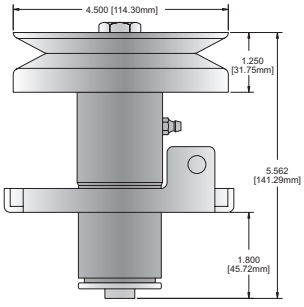

### 82-358

**Replaces**
AM136733

**Description**
- Fits X300 & EZ Trak mowers
- Use with Oregon 45-257 bearings

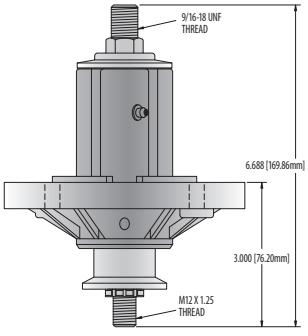

### 82-356

**Replaces**
GY20050

**Description**
- Fits L-100, L-110, L-120, & L-130 models with 42" & 48" decks, & current Home Depot models
- Use with Oregon® 45-257 bearings

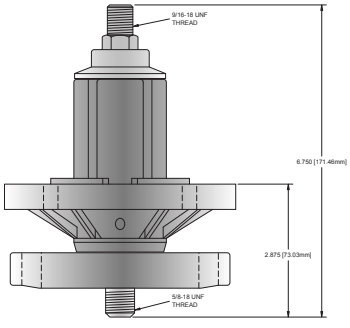

S



**IMPORTANT:** When installing spindles, follow all installation and maintenance instructions provided in the mowers owner/maintenance manual—including the correct torquing of the blade and pulley bolts/nuts as well as the lubrication of the spindle. Failure to do so may cause premature failure.

OREGON Product Code

## John Deere

**82-360**

**Replaces**
GY20867

**Description**
- Fits LA150, G110, & 190C mowers with 54" deck
- Use with Oregon 45-257 bearings

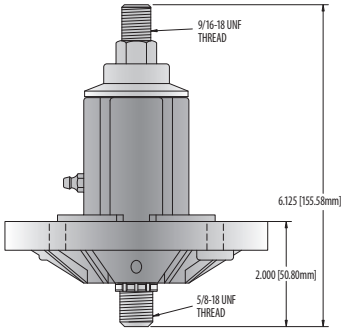

**82-359**

**Replaces**
GY20962 GY21098 GY20454

**Description**
- Fits 100 series mowers with 42" & 48" decks
- Use with Oregon 45-257 bearings

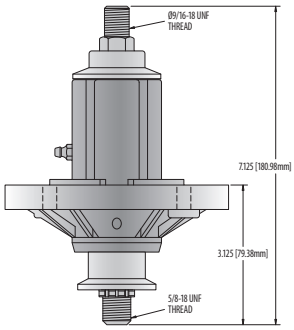

## MTD (see also Cub Cadet)

**82-500**

**Replaces**
717-0906A 917-0906A

**Description**
- For 38" & 42" model series 600 & 805, & 42" model series 700-739 & 750-769 (1991–1996)
- Shaft length: 5-7/16"
- Use with Oregon 45-259 bearing

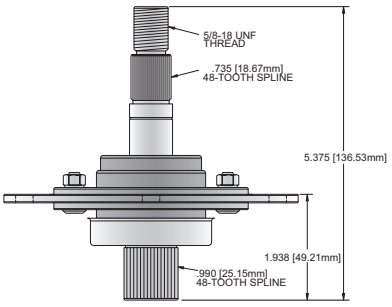

**82-500-B** **Bulk Pack:** 252 of Oregon 82-500

**45-135**

**Replaces**
15296A

**Description**
- Open bearing cup for deck spindles
- Use with Oregon® 82-500, 82-502, & 82-503

S

IMPORTANT: When installing spindles, follow all installation and maintenance instructions provided in the mowers owner/maintenance manual—including the correct torquing of the blade and pulley bolts/nuts as well as the lubrication of the spindle. Failure to do so may cause premature failure.

# Spindles

OREGON Product Code

## MTD (see also Cub Cadet)

### 45-108

**Replaces**
08253B

**Description**
- Bearing housing for Oregon 82-932, bottom bearing housing for 82-500, 82-501, 82-502, & 82-503
- 32" thru 42" cut

### 82-501

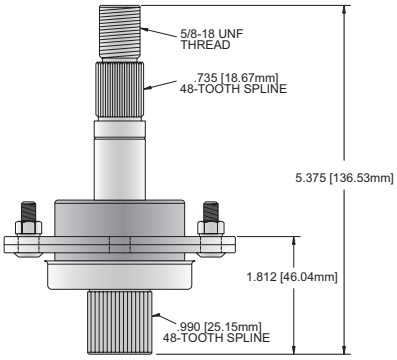

**Replaces**
717-0900 917-0900A

**Description**
- For 36", 38" & 39" cut tractors (1991–1997)
- Shaft length 5-7/16"
- Use with Oregon 45-259 bearings

### 82-502

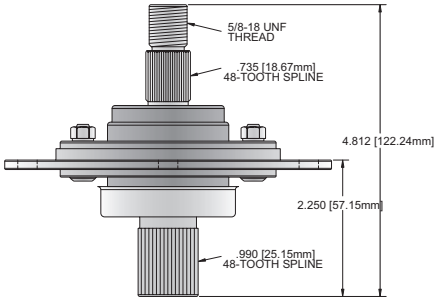

**Replaces**
717-0912 917-0912

**Description**
- For 44" cut, outer spindle, 46" cut, center & right-hand spindle on 800 to 849 series H, deep deck (1988-1992)
- Shaft length: 4-15/16"
- Use with Oregon 45-259 bearing

### 45-135

**Replaces**
15296A

**Description**
- Open bearing cup for deck spindles
- Fits Oregon 82-500, 82-502, & 82-503

S



IMPORTANT: When installing spindles, follow all installation and maintenance instructions provided in the mowers owner/maintenance manual—including the correct torquing of the blade and pulley bolts/nuts as well as the lubrication of the spindle. Failure to do so may cause premature failure.

OREGON Product Code

## MTD (see also Cub Cadet)

### 82-503

**Replaces**
717-0913 917-0913

**Description**
- For 44" cut, center double pulley & 46" cut, left hand spindle
- Fits 800-849 series H (1988-1992)
- Shaft length 6-5/16"
- Use with Oregon® 45-259 bearings

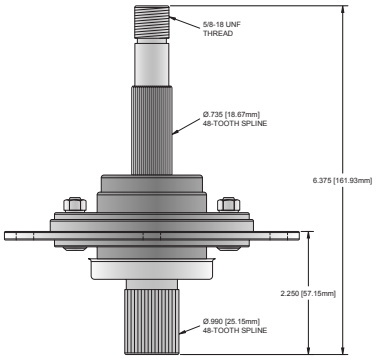

### 45-135

**Replaces**
15296A

**Description**
- Open bearing cup for deck spindles
- Fits Oregon 82-500, 82-502, & 82-503

### 82-511

**Replaces**
618-0117 918-0117
618-0112 Oregon 82-504

**Description**
- For 46" deck
- Blades with star hole
- Uses double pulley
- LH Spindle for 800 series (1996 & older)
- Use Oregon 45-259 bearing
- Use Oregon spindle shaft 85-053

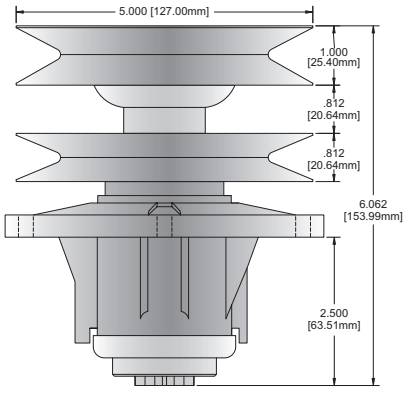

### 82-512

**Replaces**
618-0111 618-0116 918-0116

**Description**
- For 46" deck with single pulley (1993–1996), (3) for 600 series riders & (2) at the RH & center positions for 800 series riders
- For star hole blades
- Use with Oregon 45-259 bearing & 44-102 pulley

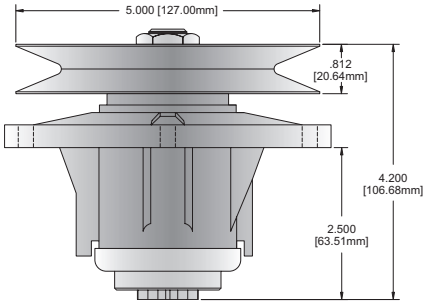

S

# Spindles

OREGON Product Code

## MTD (see also Cub Cadet)

### 82-513-2

**Replaces**

618-0138 618-0142 918-0142

**Description**

- Fits 38" & 42" decks with newest style "X" housing (1998 & newer)
- For star hole blades
- Does not come with a pulley
- Use Oregon® 45-259 bearings, 85-048 spindle shaft, & 44-102 pulley (38" deck) or 44-369 pulley (42" deck)

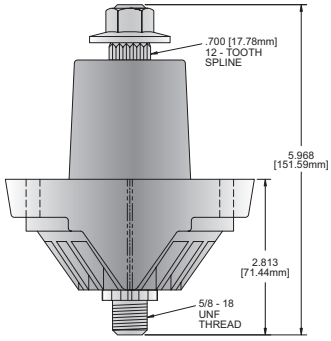

### 82-515

**Replaces**

618-0240 918-0240 618-0430A

**Description**

- Fits center & RH on 46" deck, 600 & 800 series riders (1997 & newer), (3) for 600 series, (2) 82-215 & (1) 82-516 for 800 series
- Fits star hole blades
- Use with Oregon 45-259 bearings, 85-049 spindle shaft, & 44-102 pulley

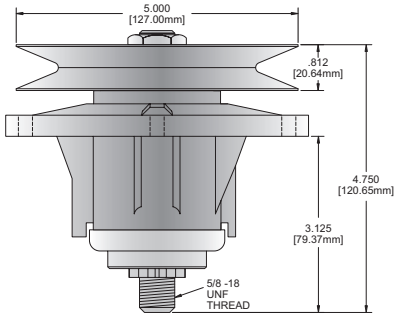

### 82-516

**Replaces**

618-0241 918-0241 918-0431B
618-0431 918-0431A 918-0431C

**Description**

- Fits left hand side on 46" deck, 800 series (1997 & newer)
- For star hole blades
- Use Oregon 45-259 bearings & 85-051 spindle shaft

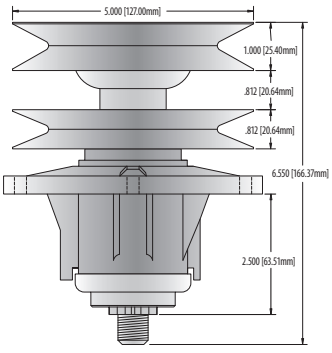

### 82-517

**Replaces**

918-0574 618-0565

**Description**

- Spindle assembly
- Fits later model 42" deck, 600 series
- For star hole blades
- Use with Oregon 45-259 bearings & 85-052 spindle shaft

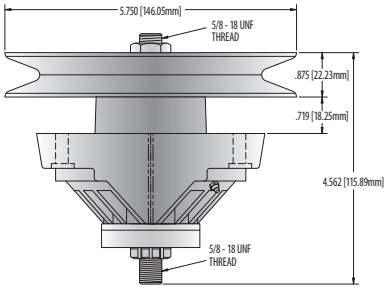

S



IMPORTANT: When installing spindles, follow all installation and maintenance instructions provided in the mowers owner/maintenance manual—including the correct torquing of the blade and pulley bolts/nuts as well as the lubrication of the spindle. Failure to do so may cause premature failure.

OREGON Product Code

## MTD (see also Cub Cadet)

### 82-520

**Replaces**
918-0596

**Description**
- For Model 13AQ617, 13AT618, & 13AG619 with 48 " deck

### 82-518

**Replaces**
918-0595 618-0595

**Description**
- Spindle assembly
- Fits later model 46" deck, 800 series double pulley
- For star hole blades
- Use with Oregon® 45-259

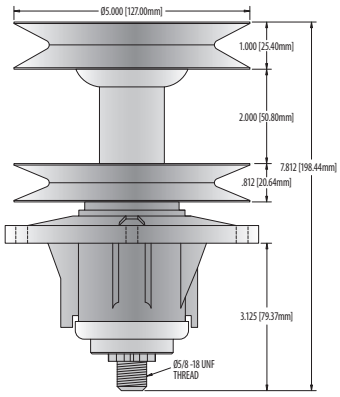

### 82-519

**Replaces**
918-0671

**Description**
- Spindle assembly
- For 54" decks, 800 series with star hole blades
- Use with Oregon 45-259 & 85-050 spindle shaft

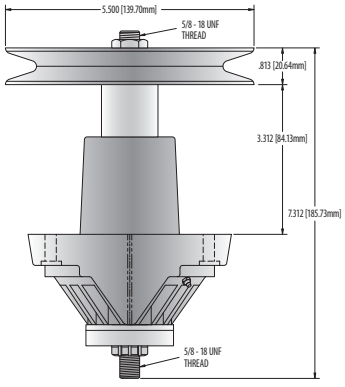

### 82-044

**Replaces**
918-3167 618-3167

**Description**
- Fits some 38" decks

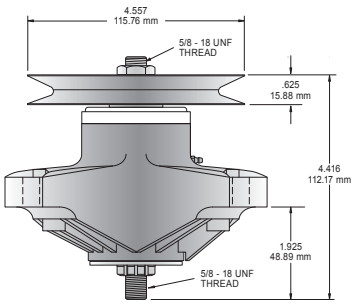

S

**IMPORTANT: When installing spindles, follow all installation and maintenance instructions provided in the mowers owner/maintenance manual—including the correct torquing of the blade and pulley bolts/nuts as well as the lubrication of the spindle. Failure to do so may cause premature failure.**

# Spindles

OREGON Product Code

## MTD (see also Cub Cadet)

### 82-051

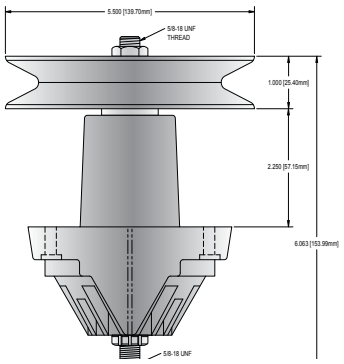

**Replaces**

| | | |
|---|---|---|
| 918-04197A | 918-0427C | 618-0427C |
| 918-04197 | 918-0427D | 618-0427A |
| 918-0427 | 918-0324 | 618-04197A |
| 918-0427A | 618-0427D | 618-0324A |

**Description**

- Fits models 13AR608G, 13AT604G, 13AX604G, 13AX604G (1999), 13AD604G (1999–2000), 13A1762F, 13AH762F, 13AM762F (2006), 13AO616G, LT-1650 (2000–2001), ZT-17, 17AA5A4G (2004), 17BA554G, 13A1760F, 13A3760F, 13AM771F (2005), 13AC762F, 13AH762F, 13AM762F (2005–2006), 13AG619H, 13AI608G, 13AK604G, 13AK608G, 13AS608G, 13AT618G, 13AU618H, 13BR609G (2000), ZT-42 (2005–2008), 13A1762F, 13A3762F, 17AA554G (2006), & 17AA5AAG (2008)
- For star center hole blades

### 82-054

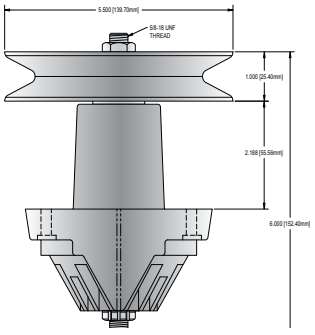

**Replaces**

| | | |
|---|---|---|
| 918-04474A | 918-04495 | 618-04495A |
| 918-04474 | 618-04474A | 618-04495 |
| 918-04495A | 618-04474 | |

**Description**

- Fits 38" decks, 700 series F deck (2007–2013)
- For star center hole blades

### 82-058

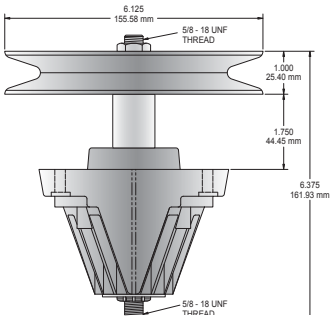

**Replaces**

| | | |
|---|---|---|
| 918-04822A | 918-04889 | 618-04889A |
| 918-04822 | 618-04822A | 618-04889 |
| 918-04889A | 618-04822 | |

**Description**

- Fits mower models 13A226JD, 13A2775S, 13A277SS, 13A2785S, 13AC26JD, 13AD775S, 13AJ771S, 13AJ775S, 13AJ77SS, 13AJ78SS, 13AJ795S, 13AL78SS, 13AL79SS, 13AM772S, 13AM775S, 13AM77LS, 13AN771S, 13AN772S, 13AN775S, 13AN77SS, 13AN785S, 13AN795S, 13AO772S, 13AO785S, 13AP91GS, 13AV90GS, 13AV91GS, 13AX771S, 13AX78TS, 13AX795S, 13B226JD, 13BJ78SS, 13BM772S, 13RM772S, 13W2771S, 13W2775S, 13WJ771S, 13WV771S, 13WX78TS, 17AC2ACS, 17AF2ACS, 17AFCACS, 17AKCACS, & 17AK2ACS (2010–2014)
- For star center hole blades

S



IMPORTANT: When installing spindles, follow all installation and maintenance instructions provided in the mowers owner/maintenance manual—including the correct torquing of the blade and pulley bolts/nuts as well as the lubrication of the spindle. Failure to do so may cause premature failure.

OREGON Product Code

## MTD (see also Cub Cadet)

**82-043**

**Replaces**

| | |
|---|---|
| 918-05016 | 918-04825 |
| 618-05016 | 618-04825B |

**Description**

- Fits model 138AQ91 with 50" deck (2012)

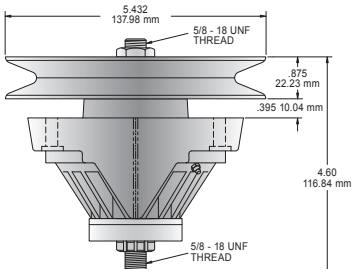

| | | | |
|---|---|---|---|
| **04-015** | 912-0417A | **Pulley Nut**<br>Fits most MTD spindles | |

**82-127** – NEW

**Replaces**
918-06989

**Description**

- Fits 13AL78XT099, 13AL78XT299, & 13AL78XT055; Troy-Bilt TB46 & Horse XP
- Height: 6-3/4", pulley outer diameter: 6-1/4"
- 6 pt. star blade mount
- No threads in housing, use self-tapping screws
- Includes nut, spacer, and pulley

**82-128** – NEW

**Replaces**
918-04865A

**Description**

- Fits Cub Cadet LTX1045, LTX1046, and Z-force S 46; MTD 13AL771T004, 13AL78ST099, 13AL78ST299, 13AL795T004, 13AL795T057, 13AO785T058, 13AR91PT099, 13AR91PT299, 13AT915T004, 13AX771T004, 13AX791T031, 13AX90YT001, 13AX915T004, & 13WX791T031
- Height: 6" height, pulley outer diameter: 6-1/2"
- Pulley and grease zerk included
- 6 pt. star blade mount

**82-130** – NEW

**Replaces**
918-05137

**Description**

- Fits Cub Cadet RZT-S54; MTD Z6600 & ZT-L54; Toro 13AX90RS848 & 13AX91RS848; Troy-Bilt Mustang 54 XP
- Height: 6-15/16", pulley outer diameter: 5-11/16"
- 6 pt. star blade mount

S

**IMPORTANT:** When installing spindles, follow all installation and maintenance instructions provided in the mowers owner/maintenance manual—including the correct torquing of the blade and pulley bolts/nuts as well as the lubrication of the spindle. Failure to do so may cause premature failure.

# Spindles

OREGON Product Code

## MTD (see also Cub Cadet)

**82-131** – NEW

**Replaces**
918-06991

**Description**
- Fits most MTD 200 & 700 series mowers with 42" deck
- Height: 6-3/4", pulley outer diameter: 5-1/2"
- 6 pt. star blade mount

**82-132** – NEW

**Replaces**
918-05078A

**Description**
- Fits Cub Cadet RZT-S46; MTD ZT-S46; Troy-Bilt Mustang XP 46 & Mustang Pivot S 46
- Height: 7-1/4", pulley outer diameter: 6-7/16"
- 6 pt. star blade mount

**82-104** – NEW

**Replaces**
618-06976 918-06976
618-06976A 918-06976A

**Description**
- Fits Cub Cadet LT42, LT42C, & LX42 with 42" deck; MTD 131PA1ZS099, CYT4220, & CYT4220SE with 42" deck
- 6 pt. star blade mount
- Thread: 5/8"-18 UNG
- Height: 6-3/16", pulley outer diameter: 5-1/2"

**82-105** – NEW

**Replaces**
918-06977
918-06977A

**Description**
- Fits Cub Cadet LT46 & LX46 with 46" deck; MTD 131AQ1ZT099, 13AQA1ZT299, & CYT4622SE with 46" deck
- 6 pt. star blade mount
- Thread: 5/8"-18 UNG
- Height: 6-1/4", pulley outer diameter: 6-1/4"





IMPORTANT: When installing spindles, follow all installation and maintenance instructions provided in the mowers owner/maintenance manual—including the correct torquing of the blade and pulley bolts/nuts as well as the lubrication of the spindle. Failure to do so may cause premature failure.

OREGON Product Code

## MTD (see also Cub Cadet)

**82-106** – NEW

**Replaces**
618-06981
918-06981

**Description**
- Fits Cub Cadet XT1-LT50 & XT2-LX50 with 50" deck; MTD CYT5023SE with 50" deck
- 6 pt. star blade mount
- Thread 5/8"-18 UNG
- Height: 6", pulley outer diameter: 5"

---

**82-110** – NEW

**Replaces**

| | | |
|---|---|---|
| 618-04456 | 918-04456 | 918-04461 |
| 618-04456A | 918-04456A | 918-04461A |
| 618-04461 | 918-04456B | Toro 112-0460 |

**Description**
- Fits Cub Cadet LT1042; MTD Newer 700-series with 42" deck; Toro LX420 & LX425 (2006–2007)
- 6 pt. star blade mount
- Height: 5-3/4", pulley outer diameter: 6-1/4"

---

**82-109** – NEW

**Replaces**

| | | |
|---|---|---|
| 618-04636 | 618-04865 | 918-04865A |
| 618-04636A | 618-04865A | |

**Description**
- Fits Cub Cadet LTX1045, LTX1046, and Z-force S 46; MTD 13AL771T004, 13AL78ST099, 13AL78ST299, 13AL795T004, 13AL795T057, 13AO785T058, 13AR91PT099, 13AR91PT299, 13AT915T004, 13AX771T004, 13AX791T031, 13AX90YT001, 13AX915T004, & 13WX791T031
- 6 pt. star blade mount
- Pulley and grease zerk included
- Height: 6", pulley outer diameter: 6-1/2"

S

**IMPORTANT:** When installing spindles, follow all installation and maintenance instructions provided in the mowers owner/maintenance manual—including the correct torquing of the blade and pulley bolts/nuts as well as the lubrication of the spindle. Failure to do so may cause premature failure.

# Spindles

OREGON Product Code

## Murray

### 82-028

**Replaces**

1001709MA 1001709

**Description**

- For 38" deck on 387002X83A, 387002X92A, 387002X92C, 387002X92D, 387002X92NA,387003X8A & 307004X48A
- Use with Oregon 65-204 blade adapter & 45-257 bearings

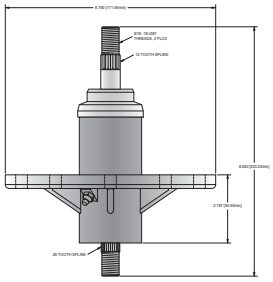

### 82-243

**Replaces**

24384 90905 492574
20551 92574

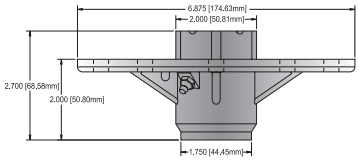

**Description**

- OD: 7"
- Zerk fitting
- Fits 28"–52" & 46"–52" rail frame
- GT rail frame tractors
- Use with Oregon 45-243 upper bearing, 45-242 lower bearing, & 45-250 bearing kit

**82-243-B** **Bulk Pack:** 330 of Oregon 82-243

### 82-023

**Replaces**

24384

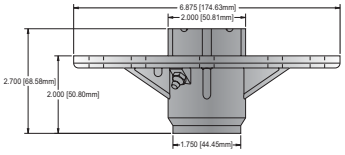

**Description**

- Heavy-duty version of Oregon® 82-243
- Heavier reinforced construction than OEM
- HD bearings
- OD: 7"
- Zerk fitting
- Fits 28" - 52" rail frame & 46" - 52" GT rail frame tractors
- Uses with Oregon 45-243 upper bearing & 45-242 lower bearing
- Tapped mounting holes
- Includes mounting hardware

**82-023-B** **Bulk Pack:** 330 of Oregon 82-023

### 82-250

**Replaces**

55962 455962

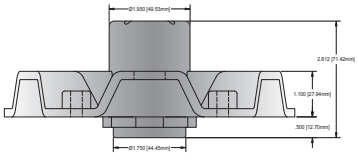

**Description**

- For 30" rear engine riders with new style decks
- Use with Oregon 45-243 & 45-242 bearings & 82-244 spacer

S



**IMPORTANT:** When installing spindles, follow all installation and maintenance instructions provided in the mowers owner/maintenance manual—including the correct torquing of the blade and pulley bolts/nuts as well as the lubrication of the spindle. Failure to do so may cause premature failure.

OREGON Product Code

## Noma

**82-020**

**Replaces**
310675 779058

**Description**
- Double pulley, 2" saddle
- Center-to-center spacing on pulleys: 1-3/8"
- Height: 6-3/4", pulley dia.: 5-1/2"
- Use with Oregon 45-257 bearing

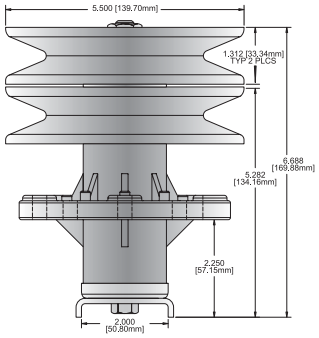

## Scag

**82-325**

**Replaces**
46631

**Description**
- Fits all Scag mowers using cast iron spindle assemblies
- **Ships without grease – must be serviced before use!**

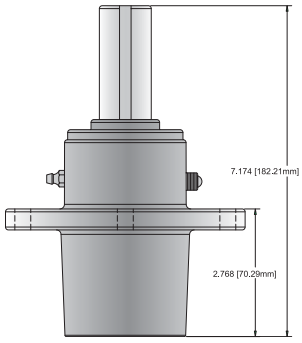

**49-314**

**Replaces**
481024

**Description**
- Upper grease seal
- Fits Oregon® 82-325
- OD: 2", ID: 1.50"

**49-333**

**Replaces**
481025

**Description**
- Lower grease seal
- Fits Oregon 82-325
- OD: 2", ID: 1.625"

## Sears, Roper, Poulan

**82-677**

**Replaces**
Sears/Roper 101477 Sears/Roper 677A14
Sears/Roper 677A233

**Description**
- Pulley Dia: 5-1/2"
- Height: 6-7/8"
- Blade saddle 2-1/2"
- Made with brake lip
- For 36" deck
- OEM styling
- Use with Oregon 45-257 bearing

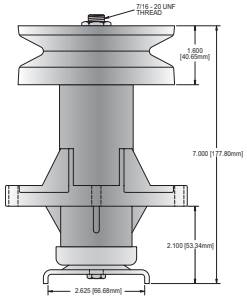

S

**IMPORTANT: When installing spindles, follow all installation and maintenance instructions provided in the mowers owner/maintenance manual—including the correct torquing of the blade and pulley bolts/nuts as well as the lubrication of the spindle. Failure to do so may cause premature failure.**

# Spindles

OREGON Product Code

## Sears, Roper, Poulan

**82-678**

**Replaces**
Sears 105891 Poulan 532-121687
Roper/AYP 121687X

**Description**
- Same as 82-677 with 2-1/4" blade saddle
- OEM styling
- Use with Oregon 45-257 bearing

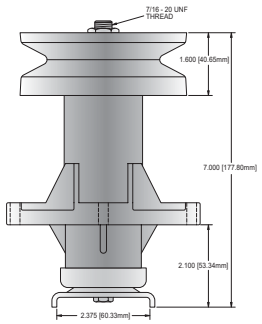

## Toro

**82-675**

**Replaces**
105-1688

**Description**
- Fits 62 Z models
- For center spindle
- Use with Oregon 45-002 bearing
- **Ships without grease – must be serviced before use.**
- **Pulley retaining nut must be torqued at 100–120 ft/lbs. before use.**

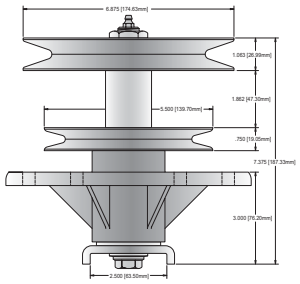

**82-676**

**Replaces**
99-4640

**Description**
- Fits 62 Z models
- For RH & LH Spindles
- Use with Oregon® 45-002 bearing
- **Ships without grease – must be serviced before use.**
- **Pulley retaining nut must be torqued at 100–120 ft/lbs. before use.**

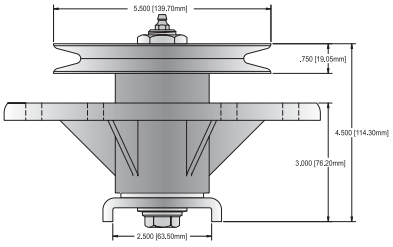

**82-674**

**Replaces**
100-3976

**Description**
- Fits 52 Z models
- Use with Oregon 45-002 bearing
- **Ships without grease – must be serviced before use.**
- **Pulley retaining nut must be torqued at 100–120 ft/lbs. before use.**

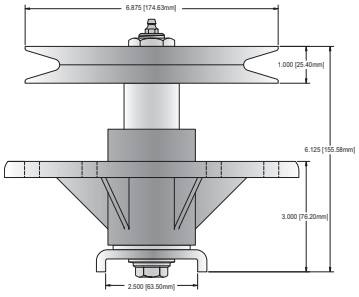

S



IMPORTANT: When installing spindles, follow all installation and maintenance instructions provided in the mowers owner/maintenance manual—including the correct torquing of the blade and pulley bolts/nuts as well as the lubrication of the spindle. Failure to do so may cause premature failure.

OREGON Product Code

## Toro

**82-130** – NEW

**Replaces**
918-05137

**Description**
- Fits Cub Cadet RZT-S54; MTD Z6600 & ZT-L54; Toro 13AX90RS848 & 13AX91RS848; Troy-Bilt Mustang 54 XP
- Height: 6-15/16", pulley outer diameter: 5-11/16"
- 6 pt. star blade mount

**82-111** – NEW

**Replaces**
117-7439
117-7268

**Description**
- Fits Toro Time Cutter SS 5000 & SS 4200

## Wright MFG

**82-053**

**Replaces**
71460007

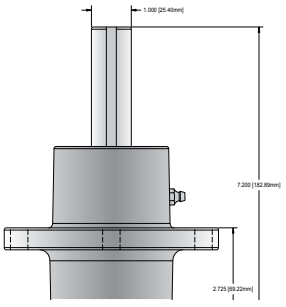

**Description**
- Fits large frame standers before serial number 49705 (hollow-spindle shaft)
- Does not fit small frame standers, Stander I, Stander RH, Stander X, Stander ZK, Sentar, Sport, Wright Z, & Wright ZTO

**82-057**

**Replaces**
71460022

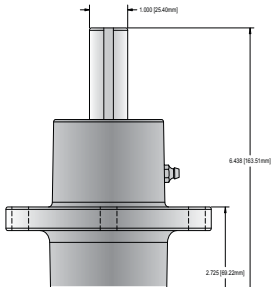

**Description**
- For small frame standers (hollow-spindle shaft)
- Does not fit large frame Standers, Stander I, Stander RH, Stander X, Stander ZK, Sentar, Sport, Wright Z, & Wright ZTO

S

**IMPORTANT: When installing spindles, follow all installation and maintenance instructions provided in the mowers owner/maintenance manual—including the correct torquing of the blade and pulley bolts/nuts as well as the lubrication of the spindle. Failure to do so may cause premature failure.**

# Spindle Shafts

OREGON Product Code

**85-055**

**Fits**
Oregon® 82-012

**Description**
- Includes Oregon 45-259 & 45-257 bearings

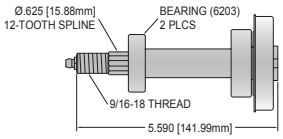

**85-054**

**Fits**
Oregon 82-029

**Description**
- Includes Oregon 45-259 & 45-257 bearings

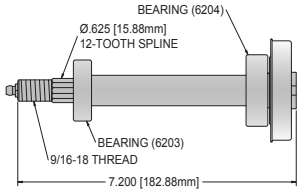

**85-044**

**Fits**
Oregon 82-405 Oregon 82-408

**Description**
- Includes (2) Oregon 45-259 bearings

**85-045**

**Fits**
Oregon 82-402

**Description**
- Includes (2) Oregon 45-205 bearings & (2) Oregon 45-206 races

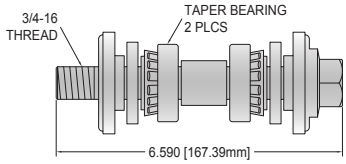


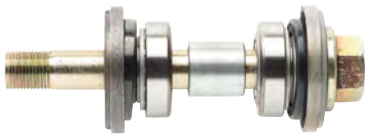

**85-047**

**Fits**
Oregon 82-407

**Description**
- Includes (2) Oregon 45-259 bearings

**85-048**

**Fits**
Oregon 82-513-2

**Description**
- Includes (2) Oregon 45-259 bearings

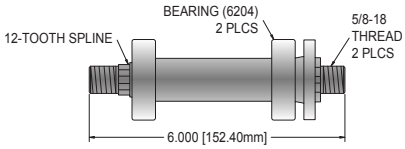

**85-049**

**Fits**
Oregon 82-515

**Description**
- Includes (2) Oregon 45-259 bearings

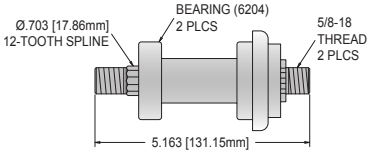

S



IMPORTANT: When installing spindles, follow all installation and maintenance instructions provided in the mowers owner/maintenance manual—including the correct torquing of the blade and pulley bolts/nuts as well as the lubrication of the spindle. Failure to do so may cause premature failure.

OREGON Product Code

**85-050**

**Fits**
Oregon® 82-519

**Description**
- Includes (2) Oregon 45-259 bearings

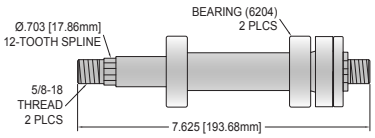

**85-051**

**Fits**
Oregon 82-516

**Description**
- Includes (2) Oregon 45-259 bearings

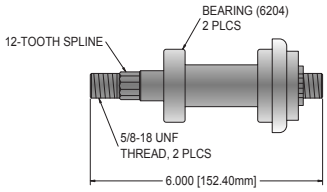

**85-052**

**Fits**
Oregon 82-517

**Description**
- Includes (2) Oregon 45-259 bearings

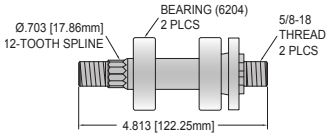

**85-053**

**Fits**
Oregon 82-511

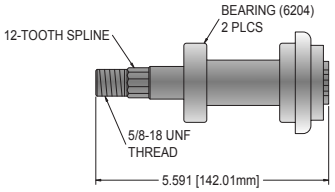

**85-017**

**Replaces**
AYP 137646 AYP 137645

**Description**
- Star blade mount
- Spindle shaft
- For 36", 38" & 42" ventilated decks
- OD: 3/4", Shaft length: 7"
- Fits Oregon 82-225, 82-220, 82-024 & 82-014
- Includes Oregon 45-259 & 45-257 bearings
- Use with Oregon 44-371 or 44-370 pulleys

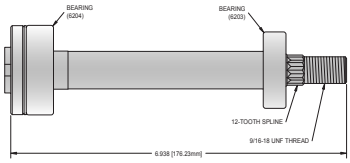

**85-023**

**Replaces**
AYP 137553

**Description**
- Fits Oregon 82-221 spindle shaft
- Accommodates star center hole blades
- OD: 3/4", Length: 4-7/8"
- Spindle shaft for 44" & 50" ventilated decks
- Includes Oregon 45-259 & 45-257 bearings
- Use with Oregon 44-371 or 44-370 pulleys

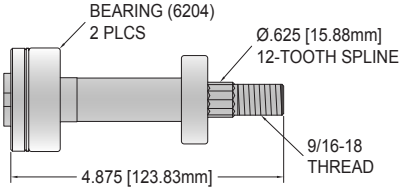

S

**IMPORTANT: When installing spindles, follow all installation and maintenance instructions provided in the mowers owner/maintenance manual—including the correct torquing of the blade and pulley bolts/nuts as well as the lubrication of the spindle. Failure to do so may cause premature failure.**

# Spindle Shafts

OREGON Product Code

**85-035**

**Replaces**
AYP 187291 Husqvarna 532187291

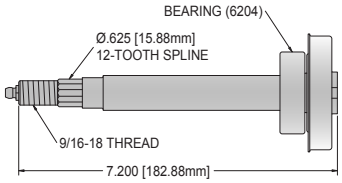

**Description**
- Fits Oregon® 82-026
- Use with Oregon 44-371 or 44-370 pulleys

**85-036**

**Replaces**
AYP 192872 Husqvarna 532192872

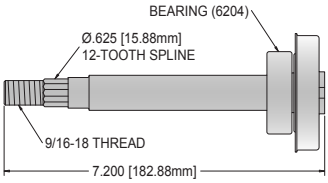

**Description**
- Use with Oregon 44-371 or 44-370 pulleys

**85-034**

**Replaces**
AYP 165482

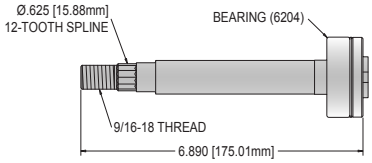

**Description**
- Use with Oregon 44-371 or 44-370 pulleys
- Six-point star

**82-305**

**Replaces**
Scag 43001-02 Wright Stander
Jacobsen 182246 Encore 363058 Ferris 1541480

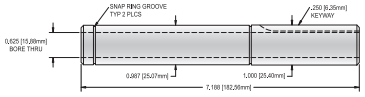

**Description**
- Fits Oregon 82-309 (OBS) & 82-300 spindle shafts
- Length: 7-3/16", OD: .987, ID: 5/8"; pulley OD: 1"

**85-001**

**Replaces**
Murray 20616

**Description**
- For 39" & 42" mowers
- Length: 5-1/4", O.D.: 5/8"
- UNF: 1/2-20 , 2 - 5/32" keyways
- For LT tractors, 42" deck

**85-028**

**Replaces**
Murray 774091 Murray 94129

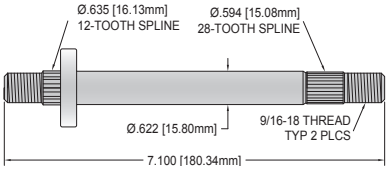

**Description**
- Spindle shaft
- 7.03" L, splined both ends, fits 38", 40", 42", 46", 48" & 50" LT rail frame, 46" GT rail frame & old style 52" GT & 30" export lawn tractor, also fits Scotts 42" LT & 52" GR rail frame

S



**IMPORTANT: When installing spindles, follow all installation and maintenance instructions provided in the mowers owner/maintenance manual—including the correct torquing of the blade and pulley bolts/nuts as well as the lubrication of the spindle. Failure to do so may cause premature failure.**

OREGON Product Code

**85-029**

**Replaces**
Murray 92849

**Description**
- Spindle shaft
- Splined both ends, 7.92" L

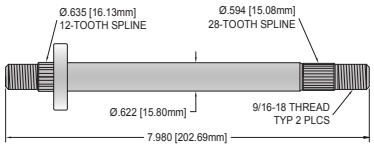

**85-012**

**Replaces**
Murray 91921

**Description**
- For 46" & 30" cut
- Length: 6.480", OD: .5/8"
- Use Oregon® 65-208 splined blade adapter & 44-342 pulley
- 46" deck - 3 blade system - old style deck & 30" rear engine rider uses Oregon pulley 44-340

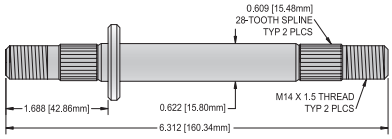

**85-008**

**Replaces**
Murray 91922

**Description**
- For 38", 40" & 42" decks with splined shaft
- Use with Oregon 65-208 blade adapter
- Length: 7.89", OD: 5/8"
- Use splined pulley & blade adapter

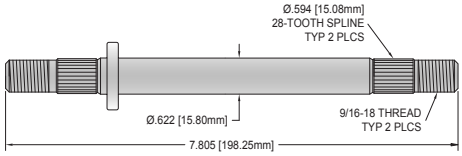

**85-011**

**Replaces**
Snapper 4-4785

**Description**
- Fits all single blade riders
- Length: 10-5/32"
- Use with Oregon® 45-295 bearing

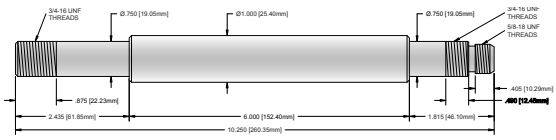

S

**IMPORTANT: When installing spindles, follow all installation and maintenance instructions provided in the mowers owner/maintenance manual—including the correct torquing of the blade and pulley bolts/nuts as well as the lubrication of the spindle. Failure to do so may cause premature failure.**

# Spindle Shafts

OREGON Product Code

## Replacement Parts

| OREGON | Replaces | Description | Product Code | |
|---|---|---|---|---|
| **09-260** | AYP 187690 | **Spindle Washer**<br>ID: 43/64", OD: 1-1/8", thickness: 5/32" | | |
| **82-244** | Murray 91903 | **Spacer** | | |
| **04-001** | AYP 129729<br>AYP 139729<br>AYP 137266 | **Pulley Nut**<br>Fits Oregon 82-225 spindle & 85-017 shaft<br>on 36", 38" & 42" ventilated decks | | |
| **04-015** | MTD 912-0417A | **Pulley Nut**<br>Fits most MTD spindles | | |
| **02-301** | AYP 17490612 | **Self-Tapping Bolt**<br>For mounting Oregon spindles 82,493,<br>82-495, 82-677, 82-678, 82-679, 82-680, &<br>82-514 to mower deck 3/8-16 x 1" | | |
| **02-304** | AYP 173984 | **Self-Tapping Bolt**<br>For mounting Oregon 82-225 spindle to mower deck<br>5/16-18 x 1-1/4" | | |
| **49-314** | Scag 481024 | **Upper Grease Seal**<br>Use with Oregon 82-325<br>OD: 2", ID: 1.625" | | |
| **49-333** | Scag 481025 | **Lower Grease Seal**<br>Use with Oregon 82-325<br>OD: 2", ID: 1.625" | | |

S



IMPORTANT: When installing spindles, follow all installation and maintenance instructions provided in the mowers owner/maintenance manual—including the correct torquing of the blade and pulley bolts/nuts as well as the lubrication of the spindle. Failure to do so may cause premature failure.

| OREGON | Description | Product Code |
|---|---|---|

## Backpack Sprayers

**518769** **Backpack Sprayer, 4-Gallon (16 liter)**
Non-pressurized tank
Includes lance and spray nozzle (choice of flat fan or adj. cone)
Flexible hose is over 6 feet long
Shoulder strap and spare seal kit included
Lance holder
Easy to store

**518771** **Backpack Sprayer, 5-Gallon (20 liter)**
Non-pressurized tank
Includes lance and spray nozzle (choice of flat fan or adj. cone)
Flexible hose is over 6 feet long
Shoulder strap and spare seal kit included
Lance holder
Easy to store

## Replacement Parts

**572030** **Wand, Metal**
Use with Oregon® 518769 & 518771 backpack sprayers

**605533** **Plastic Wand Kit with Nozzle, Backpack Sprayer** - NEW
Use with Oregon 518769 & 518771 backpack sprayers

**572037** **Hose, Backpack Sprayer**
Use with Oregon 518769 & 518771 backpack sprayers

**572018** **Lid, Air Chamber Pressure**
Use with Oregon 518769 & 518771 backpack sprayers

**572017** **Lid, Tank w/ Diaphragm**
Use with Oregon 518769 & 518771 backpack sprayers

**572031** **Washer, Sealing, for Tank Lid**
Use with Oregon 518769 & 518771 backpack sprayers

**572049** **Washer, Felt, Air Chamber Pressure Lid**
Use with Oregon 518769 & 518771 backpack sprayers

S

# Sprayers

| OREGON | Description | Product Code |
|---|---|---|

## Replacement Parts

**572015** **Pump, Repair Kit**
Use with Oregon® 518769 or 518771 backpack sprayers
Includes 2 piston cups, 1 check ball

**605531** **Carrying Strap, Backpack Sprayer** - NEW
Use with Oregon 518769 & 518771 backpack sprayers

**605532** **Filter Screen, Backpack Sprayers** - NEW
Use with Oregon 518769 & 518771 backpack sprayers

**605534** **Rubber Seals Kit, Backpack Sprayers** - NEW
Use with Oregon 518769 & 518771 backpack sprayers

**605535** **Seal Valve, Backpack Sprayer** - NEW
Use with Oregon 518769 & 518771 backpack sprayers

S

## Can't find what you're looking for?

Try us online to search the latest products available.

OregonProducts.com

| OREGON | Replaces | Description | Product Code |
|---|---|---|---|

## AYP / Husqvarna

| | | | |
|---|---|---|---|
| **05-021** | 532179748<br>179748 | **Extension Spring**<br>For deck brake on lawn tractors with 42" cut (2002) | |

| | | | |
|---|---|---|---|
| **05-020** | 532106734<br>532123713X<br>106734<br>123713X | **Torsion Spring**<br>For deflector chute on many lawn tractors (1990–2008) | |

| | | | |
|---|---|---|---|
| **05-022** | 169022 | **Return Spring**<br>For deck idler on many lawn tractors (1990 & newer) | |

## Briggs & Stratton

| | | | |
|---|---|---|---|
| **49-083** | 260584<br>692207 | **Governor Rod Spring**<br>For 8 thru 11 HP engines | |

## E-Z Rake

| | | | |
|---|---|---|---|
| **43-025** | 91010 | **Dethatcher Spring** | |

| | | | |
|---|---|---|---|
| **43-035** | Honda 28442-ZH8-003<br>John Deere M128283 | **Starter Spring** - NEW<br>Fits Honda GX100, GX120, GX160, GX200, GXV160, and 28442-ZH8-003<br>John Deere 180A, 180B, 180C, 220A, 220B, 220C, 260B, and 260C greensmowers | |

| | | | |
|---|---|---|---|
| **05-027** | Husqvarna 577 88 47-01 | **String Trimmer Spring** - NEW<br>Fits BCZ 260TS | |

## MTD

| | | | |
|---|---|---|---|
| **05-001** | 732-0594A<br>932-0594A | **Extension Spring**<br>Deck belt tension spring on 46" deck<br>Length: 7-1/2", OD: 15/16" | |

| | | | |
|---|---|---|---|
| **84-010** | 732-0307<br>932-0307A | **Deck Lift**<br>Fits Helper series 600<br>Length: 11-1/4", OD: 3/4"<br>Coil length: 6-1/4"<br>Oil tempered wire diameter: 1/8" | |

# Springs

| OREGON | Replaces | Description | Product Code |
|---|---|---|---|

## MTD

| | | | |
|---|---|---|---|
| **05-070** | 732-0429A | **Speed Selector Lever**<br>Spring for variable speed model | |
| **05-023** | 732-04280B<br>732-04280B | **Extension Spring**<br>For deck idler on many lawn tractors with 38" & 42" decks (2006 & newer)<br>Length: 6-3/8", OD: 3/4" | |

## Murray

| | | | |
|---|---|---|---|
| **48-001** | 165X58<br>165X2<br>20682 | **Blade Drive Spring**<br>Length: 4-1/2", OD: 11/16" | |

## Snapper

| | | | |
|---|---|---|---|
| **05-060** | 1-3694<br>1-7326<br>1-2123 | **Drive Spring**<br>Tension spring for wheel drive on self-propelled steel deck mowers | |
| **05-061** | 1-2122 | **Clutch Spring**<br>Self-propelled mowers<br>Adjustable<br>Length: 6", OD: 1/2" | |

## Torsion & Extension Spring Assortment

| OREGON | Qty. | OD x Length x Wire Dia | Product Code |
|---|---|---|---|
| 08-201 | 112 | Torsion & Extension Springs<br>Standard refill qty. 10 | |

**Components**

| | | |
|---|---|---|
| | 10 | 1/4 x 7/16 x .020 |
| | 10 | 1/4 x 7/8 x .018 |
| | 10 | 7/32 x 1-1/2 x .018 |
| | 12 | 11/32 x 1-7/8 x .031 |
| | 12 | 5/16 x 1-3/4 x .030 |
| | 12 | 9/32 x 2-3/16 x .022 |
| | 8 | 23/64 x 1-3/8 x .031 |
| | 8 | 13/64 x 1-3/4 x .021 |
| | 10 | 9/32 x 1-1/2 x. 021 |
| | 10 | 9/32 x 3/4 x .025 |
| | 10 | 11/32 x 1-3/8 x .021 |

S

| OREGON | Replaces | Description | Product Code |
|---|---|---|---|

## Briggs & Stratton

**33-719**

396306
391178

**Electric Starter Motor**
Fits 243400 & 326400 series engines
Housing length: 4-3/8" (between caps)

**33-700**

693054
497595
494325
394805

**Electric Starter Motor**
Standard version - comparable to OEM
Fits model series, 170400, 171400, 176400, 19E400, 19F400, 19G400, 19K400, 190400, 192400, 194400, 194700, 195400, 195700, 196400, 196700, 197400, 197700, 198700, 221400, 222416, 226400, 250400, 252400, 252700, 253700, 254400, 254700, 255700, 256400, 256700, 257400, 282700, 28A700, 28B700, 28C700, 28D700, 28M700, 28N700, 28P700, 28Q700, 28R700, 28S700, 28T700, 28U700, 28V700, 28W700, 283700, 284700, 286700, 287700, 288700, 289700, 312700, 40H700, 40R500, 40R600, 401500, 404500, 405500, 406500, 406600, 406700, 407500, 407600, 407700, 44L700, 44M700, 44P700, 44Q700, 44R800, 44S700, 44S800, 441500, 441600, 441700, 445500, 445600, 445700, & 445800

**33-770**

**Magnum Heavy-Duty Electric Starter Motor**
Heavy-duty version of Oregon® 33-700
15% more torque & 15% faster than the OEM, Quicker starts, Exceeds OEM standards, Heavier gel coat on the laminations, 20% more magnet area, Large brush surface contact area
Use with Oregon 33-761 replacement brush kit

**33-708**

795121
691262
499521
497401
494990
494198
490420
399169
394943

**Electric Starter Motor**
Fits model series, 222400, 225700, 250400, 252400, 253700, 254400, 255400, 256400, 28B700, 28D700, 28M700, 28N700, 28P700, 28Q700, 28R700, 28S700, 28T700, 280700, 281700, 283700, 283700, 284700, 284700, 286700, 287700, 287700, 289700, 289700, 290400, 290700, 294400, 294700, 303400, 303700, 305400, 350700, 351400, 351700, 354400, 380700, 381400, 40G700, 40H700, 401500, 405500, 405700, 406500, 406700, 407700, 44H700, 44K700, 44L700, 44M700, 44N700, 44P700, 44Q700, 441500, 441600, 441700, 445500, 445600, 445700, 445800, 446600, 446700, 446800, 446900, 49G500, 49M700, & 49M800
Housing length: 4-3/8"
Use with Oregon 33-761 replacement brush kit
Standard version - comparable to OEM

**33-778**

**Magnum Heavy-Duty Electric Starter Motor**
Heavy-duty version of Oregon 33-708
15% more torque & 15% faster than the OEM, Quicker starts, Exceeds OEM standards, Heavier gel coat on the laminations, 20% more magnet area, Large brush surface contact area
Use with Oregon 33-761 replacement brush kit

S

# Starters

| OREGON | Replaces | Description | Product Code |
|---|---|---|---|

## Briggs & Stratton

**33-771**

Replaces: 497596, 497287, 394808

**Magnum Heavy-Duty Electric Starter Motor**
Heavy-duty version of Oregon® 33-701
15% more torque & 15% faster than the OEM, Quicker starts, Exceeds OEM standards, Heavier gel coat on the laminations, 20% more magnet area, Large brush surface contact area
Use Oregon® 33-761 replacement brush kit

**33-709**

Replaces: 498148, 495100, 399928

**Electric Starter Motor**
Fits model series, 40A700, 400400, 400700, 401700, 402400, 402700, 404400, 404700, 42A700, 42B700, 42D700, 42E700, 421700, 422400, 422400, 422700, 460700, 461700, & 462700
Housing length: 4-3/8"
Use with Oregon 33-761 replacement brush kit
Standard version - comparable to OEM

**33-779**

**Magnum Heavy-Duty Electric Starter Motor**
Heavy-duty version of Oregon 33-709, 15% more torque & 15% faster than the OEM, Quicker starts, Meets or exceeds OEM standards, Heavier gel coat on the laminations, 20% more magnet area, Large brush surface contact area
Use with Oregon 33-761 replacement brush kit

**33-740**

Replaces: 846451, 808106, 693469, 691564

**Electric Starter Motor**
Steel pinion gear for steel ring gears
Fits model series, 290400, 294400, 294700, 295400, 296400, 297300, 297400, 303400, 303700, 304400, 305400, 305700, 350400, 350700, 351400, 351700, 354400, 356400, 356700, 358700, 359400, 359700, 380400, 381400, 384400, 385400, 385700, 386400, 386700, & 389400

**NOTE**: Not for use on engines with aluminum flywheel ring gear

**33-772**

Replaces: 693551

**Starter Motor**
Steel pinion gear for steel ring gears
Fits model series, 21A800, 21A900, 21B700, 21B800, 21B900, 21D800, 21R500, 21R600, 21R700, 21R800, 212700, 212900, 214700, 215700, 215800, 215900, 216900, 217700, 217800, 217900, 218700, 219700, 219800, 219900, 28AH00, 28B700, 28BH00, 28CH00, 28D700, 28M700, 28N700, 28P700, 28Q700, 28R700, 28S700, 28T700, 28U700, 28V700, 28W700, 280H00, 280J00, 281H00, 282H00, 283H00, 284H00, 285H00, 286H00, 283700, 284700, 286700, 287700, 288700, 289700, 31A500, 31A600, 31A700, 31A700, 31B700, 31C700, 31D700, 31E500, 31E600, 31E700, 31E800, 31F700, 31G700, 31H700, 31HN700, 31K700, 31L700, 31M700, 31M900, 31N600, 31N800, 31P600, 31P700, 31P700, 31P900, 31Q500, 31Q600, 31Q700, 31R500, 31R600, 31R700, 31R800, 31R900, 31S700, 31S800, 31S900, 31X700, 310700, 311700, 312700, 313700, 33M600, 33M700, 33M900, 33R800, 33S700, 33S800, 331700, 331800, & 331900
Housing length: 3-5/8"

**NOTE**: Not for use on engines with aluminum flywheel ring gear

S

| OREGON | Replaces | Description | Product Code |
|---|---|---|---|

## Honda

| | | | |
|---|---|---|---|
| **33-735** | 31210-ZE3-013<br>Code #: 2450740 | **Electric Starter Motor**<br>Fits models GX340QAE2, GX340ZNE2, GX340VXE2, & GX390<br>Solenoid not included | |
| **33-741** | 31210-ZE1-023 | **Starter Motor**<br>12 Volt<br>Fits 5.5 HP GX160 series engines | |
| **33-733** | 31200-ZJ4-831<br>31200-ZJ4-832 | **Starter Motor**<br>12 Volt<br>Fits 24 HP GXV670, GXV620, & GXV610 series engines | |
| **33-734** | 31200-ZJ1-841<br>32100-ZJ1-842<br>32100-ZJ1-H01 | **Starter Motor**<br>12 Volt<br>Fits 24 HP GX610, GX620, & GX670 series engines | |

## Kawasaki

| | | | |
|---|---|---|---|
| **33-795** | 21163-0749<br>21163-0727 | **Electric Starter Motor**<br>Fits FR651V, FR691V, FR730V, FS481V, FS541V, & FS600V engines | |
| **33-728** | 21163-2073<br>21163-2073A | **Electric Starter Motor**<br>Fits models FC401V, FC400V, & FC420V | |
| **33-729** | 21163-2101 | **Electric Starter Motor**<br>Fits models 5F501F, FD620D, & FC661D | |
| **33-730** | 21163-7010<br>21163-7001<br>21163-7022 | **Electric Starter Motor**<br>Fits models FH451V, FH500V, FH531V, FH541V, FH580V, FH601D, FH601V, FH641D, FH641V, FH680D, FH680V, FH721D, & FH721V | |

# Starters

| OREGON | Replaces | Description | Product Code | |
|---|---|---|---|---|
| **Kawasaki** | | | | |
| **33-744** | 21163-7003 | **Electric Starter Motor**<br>Fits FH451V & AS06 | | |
| **33-794** | 21163-7023 | **Electric Starter Motor**<br>Fits FS730V, FX481V, FX541V, FX600V, FX651V, FX691V, & FX730V engines | | |
| **33-792** | 21163-7025 | **Electric Starter Motor**<br>Fits FX751V, FX801V, FX850V, FX921V, & FXT00V engines | | |
| **33-743** | 21163-7026 | **Electric Starter Motor**<br>For FH721V BS40, & AS40 | | |
| **33-793** | 99999-7080<br>21163-7007<br>21163-7029<br>21163-7031 | **Electric Starter**<br>Fits FH381V, FH430V, FH480V, FH541V, FH580V, FH601V, FH641V, FH680D, FH680V, FH721D, FH721V, & FH770D engines | | |
| **Kohler** | | | | |
| **33-714** | 24-098-01<br>24-098-01S<br>25-098-08<br>25 098 09<br>25 098 11-S | **Electric Starter Motor**<br>Solenoid shift style<br>Fits models CH12.5, 13, 14, 15, 18, 20, 22, & 25<br>9-tooth gear | | 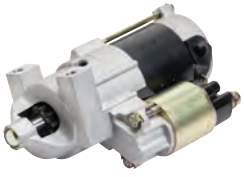 |
| **33-710** | 12-098-12<br>12-098-12S<br>12-098-19<br>12-098-19S<br>12-098-21S<br>12-098-14S | **Electric Starter Motor**<br>Fits models CH11, 12.5, 13, 14, 15, & CV15<br>Use after serial no. 241200004 | | |
| **33-722** | 12-098-10<br>25-098-04<br>25-098-04S<br>25-098-07 | **Electric Starter Motor**<br>Fits models CV12.5, 13, 15, & 16<br>For Command vertical engines | | |

S

| OREGON | Replaces | Description | Product Code | |
|---|---|---|---|---|
| **Kohler** | | | | |
| **33-715** | 12-098-20<br>12-098-20S<br>12-098-13<br>12-098-13S<br>12-098-15S<br>12-098-22S | **Electric Starter Motor**<br>Fits models CH14, CV11, 12.5, 13, 14, 15, & 16 | | |
| **33-742** | 32-098-01<br>32 098 03-S<br>32 098 03<br>32 098 04 | **Electric Starter**<br>For models SV710, SV715, SV720, SV725, SV730, SV735, SV740, SV810, SV820, & SV830<br>**Does not fit every spec, check part number** | | |
| **33-702** | 41-098-04<br>41-098-06<br>41-098-06S | **Electric Starter Motor**<br>Fits model M10, M14, & M16 series engines,<br>For 10, 14, & 16 HP engines<br>10-tooth gear<br>Use with Oregon® 33-751 replacement drive gear and<br>Oregon 33-761 replacement brush kit | | |
| **33-704** | 45-098-09<br>45-098-09S<br>237534<br>45-098-05<br>A237510<br>45-098-07 | **Electric Starter Motor**<br>Fits model K321 & K341 series engines<br>For 14 & 16 HP single cylinder engines<br>10-tooth gear<br>Use with Oregon 33-751 replacement drive gear and<br>Oregon 33-761 replacement brush kit | | |
| **33-774** | 45-098-09 | **Magnum Heavy-Duty Electric Starter Motor**<br>Heavy-duty version of Oregon 33-704<br>15% more torque & 15% faster cranking<br>Quicker starts, Exceeds OEM standards<br>Heavier gel coat on the laminations<br>Larger brush surface contact area<br>Bottom plate design allows for<br>Use with Oregon 33-751 replacement drive gear and<br>Oregon 33-761 replacement brush kit | | |
| **33-718** | 52-098-06<br>52-098-13<br>52-098-13S | **Electric Starter Motor**<br>Fits models K17, 19, 21, M18, 20, & MV20 | | |

S

# Starters

| OREGON | Replaces | Description | Product Code | |
|---|---|---|---|---|
| **MTD** | | | | |
| **33-707** | 52-098-12<br>52-098-03<br>52-098-09 | **Electric Starter Motor**<br>Fits model MV16 & M18<br>For 16 & 18 HP twin cylinder engines<br>9-tooth gear<br>Use with Oregon® 33-754 replacement drive gear and Oregon 33-761 replacement brush kit | | |
| **33-777** | 52-098-12 | **Magnum Heavy-Duty Electric Starter Motor**<br>Heavy-duty version of Oregon 33-707<br>15% more torque & 15% faster cranking<br>Quicker starts, exceeds OEM standards<br>Heavier gel coat on the laminations<br>Larger brush surface contact area<br>Bottom plate design allows for fully interchangable brush kit 33-761<br>Replacement drive gear 33-754<br>Replacement brush kit 33-761 | | |
| **33-745** | 951-11196<br>751-11196 | **Electric Starter Motor 120V**<br>Fits snow throwers using 478-SU, 483-SU, & 490-SU engines (2009–2010) | | |
| **33-746** | 951-10645A<br>751-10645A | **Electric Starter Motor 120V**<br>Fits snow throwers using 265-JU, 270-JU, 165-SU, 370-SU, 365- SUA, 365-SUB, 370-SUA, 370-SUB, & 270-V engines (2007–2010) | | |
| **Onan** | | | | |
| **33-720** | 191-0933<br>United Technologies:<br>SM10795<br>SMH12B81<br>Case N9552 | **Electric Starter Motor**<br>For B43M & B48M model engines<br>10-tooth gear, counterclockwise rotation<br>For point ignition units | | |
| **33-721** | 191-1567<br>United Technologies:<br>4367240<br>4379040 | **Electric Starter Motor**<br>Fits B43G & B48G model engines<br>For point ignition units | | |
| **33-732** | 191-1642-04<br>191-1804-04<br>191-1808-04/06<br>191-1949-04/06/07/08 | **Electric Starter Motor**<br>Fits P-216, P-218, P-220, P-224, P-227 engines | | |

S

| OREGON | Replaces | Description | Product Code |
|---|---|---|---|

## Tecumseh

**33-716** — 33835

**Electric Starter Motor**
Fits models HH80, HH100, HH120, HH150, OH,120, OH160, OH140, & OH160

**33-712** — 33605, 35763, 35763A, 36343, 36680

**Electric Starter Motor**
Fits models HM70, HM80, HM100, HMSK90, HMSK100, OHM90, OHM110, OHM120, OHSK90, OHSK100, OHSK110, OHSK120, OHSK130, OHV12, OHV125, OHV13, TVM195, TVM220, TVXL220, OHH50, & TVXL120-170

**33-711** — 36795

**Electric Starter Motor**
Fits models L, LEV, OHV135, OHV14, OHV145, OHV15, OHV150, OHV155,
OHV16, OHV160, OHV165, OHV17, OHV170, & OHV175

**33-791** — 36795

**Magnum Heavy-Duty Electric Starter Motor**
Heavy-duty version of Oregon® 33-711
15% more torque & 15% faster cranking
Quicker starts
Exceeds OEM standards
Heavier gel coat on the laminations
Larger brush surface contact area
Use with Oregon 33-761 replacement brush kit

**33-713** — 37425, 36914

**Electric Starter Motor**
Fits models OH50, OHH50, OHV110, OHV120, OHV125, OHV130, & OHV135

**NOTE**: When used to replace four bolt mount starter, 2 new screws required (included)

**33-739** — 37425

**Magnum Heavy-Duty Electric Starter Motor**
Heavy-duty version of Oregon 33-713
15% more torque & 15% faster cranking
Quicker starts
Exceeds OEM standards
Heavier gel coat on the laminations
Larger brush surface contact area
Use with Oregon 33-761 replacement brush kit

**NOTE**: When used to replace four bolt mount starter, 2 new screws required (included)

**33-738** — 33329E

**Electric Starter Motor 120V**
Fits Snow King Engines TVM, TVXL, & HMSK, & OHSK engines
**CSA Approved**

# Starters

| OREGON | Replaces | Description | Product Code | |
|---|---|---|---|---|
| **Briggs & Stratton** | | | | |
| **31-068** | 497680 | **Recoil Starter**<br>Fits 12 CID vertical shaft L-head engines | | |
| **31-918** | 499706 | **Recoil Starter**<br>Fits 09XXXX & 10XXXX series engines | | |
| **31-065** | 693900 | **Recoil Starter**<br>Fits 192400, 196400, 197400, & 19G series engines | | |
| **31-061** | 493295<br>497598 | **Recoil Starter**<br>Fits Quantum and Europa engines<br>Includes starter cup to use on engines with Susa starters<br>OD: 5-9/16", height: 1-5/8"<br>4 mounting screws, 4-1/2" c-c | | |
| **31-062** | 497830<br>496650<br>495766 | **Recoil Starter Assembly**<br>For 5 HP model 13 series engines | | |
| **31-919** | 591301 | **Recoil Starter**<br>Fits 12XXXX & 15XXXX series engines | | |
| **Honda** | | | | |
| **31-920** | 28400-Z0D-V04ZC<br>28400-Z0D-V03ZC<br>28400-Z0D-V02ZC | **Recoil Starter**<br>Fits GX100 engines | | |
| **31-060** | 28400-ZE3-W01ZP<br>28400-ZE3-W01ZA<br>28400-ZE3-W02ZP | **Recoil Starter Assembly**<br>Fits new style GX340, GX390, GX610, GX620, GXV610, & GXV620 | | |
| **31-070** | 28400-ZG9-803<br>28400-ZG9-802<br>28400-ZE7-M02 | **Recoil Starter Assembly**<br>Fits GXV140 & GXV160 | | |

S

| OREGON | Replaces | Description | Product Code |
|---|---|---|---|

## Honda

| | | | |
|---|---|---|---|
| **31-066** | 28400-ZL8-023ZA<br>28400-KL8-013ZA<br>28400-Z0L-V20ZB | **Recoil Starter**<br>For GVC135 & GCV160 model engines | |
| **31-052** | 28400-ZH8-013ZA<br>28400-ZH8-013YA | **Recoil Starter Assembly**<br>For GX120 & GX160 engines with new style with 2 plastic starter dogs<br>Use with Oregon® 31-058 repair kit<br>Use with Oregon 31-911 replacement rope handle | |
| **31-075** | 28400-ZH8-023ZG<br>28400-ZH8-023ZB<br>28400-ZH8-023YA<br>28400-ZH8-003YA | **Recoil Starter Assembly**<br>Fits GX120 & GX160 engines with new style with metal dogs | |
| **31-049** | 28400-ZE2-W01ZA<br>28400-ZE2-W01ZB<br>28400-ZE2-W01ZN | **Recoil Starter Assembly**<br>Fits GX240 & GX270 engines | |
| **31-020** | 28400-ZE1-003ZF<br>28400-ZE1-003ZA | **Recoil Starter Assembly**<br>Fits GX110 AND GX140 old style with metal dog<br>Use with Oregon 31-912 replacement rope handle | |

## Kawasaki

| | | | |
|---|---|---|---|
| **31-071** | 49088-2166 | **Recoil Starter Assembly**<br>Fits models TD40 & TD48 | |

## Komatsu

| | | | |
|---|---|---|---|
| **31-072** | | **Recoil Starter Assembly**<br>Fits models G3K & G4K | |

## Mitsubishi

| | | | |
|---|---|---|---|
| **31-074** | | **Recoil Starter Assembly**<br>Fits models TL33, TL43, & TL52 | |

S

# Starters

| OREGON | Replaces | Description | Product Code | |
|---|---|---|---|---|
| **MTD** | | | | |
| **31-119** | 951-10658<br>751-10658 | **Recoil Starter**<br>For snow throwers with 165-SU, 265-SU, 270-SU, 365-SU, & 370-SU engines (2008 & newer) | | |
| **31-120** | 951-10955<br>751-10955 | **Recoil Starter**<br>For snow throwers with 161-JW & 161-JWA engines (2008 & newer) | | |
| **31-121** | 951-11310<br>751-11310 | **Recoil Starter**<br>Fits snow throwers with 483-SU, 483-SUA, 490-SU, & 490-SUA, engines | | |
| **Robin** | | | | |
| **31-054** | 227-50811-10<br>227-50211-00<br>227-50211-01<br>227-50405-00<br>282-50211-00 | **Recoil Starter**<br>Fits model EY20 | | |
| **Tecumseh** | | | | |
| **31-050** | 590621, 590635, 590642, 590646, 590648, 590666, 590666A, 590686, 590688, 590694, 590707, 590737, 590738, 590763, 590785 | **Recoil Starter Complete**<br>For many engines (1990 & newer) | | |
| **31-051** | 590420A<br>590458 | **Recoil Starter Complete**<br>For most engines (1989 & older)<br>Fits all Snow King applications | | |

S

| OREGON | Replaces | Description | Product Code |
|---|---|---|---|

## Tecumseh

**31-047**

590746
590736
590704
590671
590748A
590788

**Recoil Starter**
Fits models HM100, HM80, HM90, LH318XA, LH358EA, OH195, OH318, TVM220, OHH50, OHH55, OHH60, & OHH65

**31-116**

590789

**Recoil Starter**
Fits models LH318SA, LH358SA, OH318SA, OH195SA, & OH358SA
❄ **Has winter pulley**

**31-117**

590787
590784

**Recoil Starter**
FIts model LH195SA
❄ **Has winter pulley**

S

# Starter Parts

| OREGON | Replaces | Description | Product Code |
|---|---|---|---|

## Electric Starter Brushes

**33-759-0** Briggs & Stratton 395538

**Brush Set**
For OEM style Briggs & Statton starters with 3-5/8" or 4-3/8" housing length

**33-760-0** Briggs & Stratton 497608

**Brush Set**
Fits OEM style Briggs & Statton motors

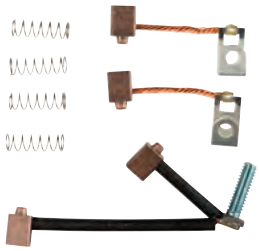

**33-761**

**Replacement Brush Set**
For Oregon® starters with aluminum end caps
Use with Oregon starter parts 33-700, 33-701, 33-708, 33-709, 33-719, 33-704, 33-705, 33-707, 33-710, 33-714, 33-740, 33-774, 33-777, 33-791, & 33-739

**33-762-0** Briggs & Stratton 395537
John Deere AM107180

**Starter End Cap**
For OEM style Briggs & Stratton starters with 3-5/8" housing length

**33-768-0** Tecumseh 37442
Tecumseh 36959
Tecumseh 35899

**Starter End Cap**
Fits models OHV110, OHV125, & OHV130
Includes brushes and bearings

## Electric Starter Drives

**33-007** Briggs & Stratton 398003
Briggs & Stratton 692024

**Starter Drive**
For all electric starter mowers with gear retained by roll pin, 8 HP thru 18 HP
Use with Oregon 43-012 gear
Use with Oregon 33-003 starter assembly

**33-003** Briggs & Stratton 495877
Briggs & Stratton 490467
Briggs & Stratton 393254

**Starter Drive**
Gear kit without clutch
Includes gear, retainer spring, & cover

S

| OREGON | Replaces | Description | Product Code |
|---|---|---|---|

## Electric Starter Drives

| | | | |
|---|---|---|---|
| **33-005** | Briggs & Stratton 696540<br>Briggs & Stratton 495878<br>Briggs & Stratton 490421<br>Briggs & Stratton 396865 | **Starter Drive**<br>Complete assembly with clutch<br>Includes gear, retainer spring, & cover | |
| **33-006** | Briggs & Stratton 696541<br>Briggs & Stratton 497606 | **Starter Drive Kit**<br>New style for electric starter motors<br>For single & twin cylinder aluminum block engines<br>Use with Oregon® 33-700, 33-701, 33-708, 33-709, 33-770, 33-771, 33-778, & 33-779 starters | |
| **33-029-1** | Briggs & Stratton 496881 | **Starter Drive Kit**<br>Fits 23, 24, 25, & 35 CID OHV engines with **Steel flywheel ring gears only** | |

## Starter Gears

| | | | |
|---|---|---|---|
| **31-056** | Briggs & Stratton 399676<br>Briggs & Stratton 392134<br>Briggs & Stratton 696537 | **Flywheel Ring Gear**<br>For model 17–28 series engines | |
| **43-012** | Briggs & Stratton 280104<br>Briggs & Stratton 280104S<br>Briggs & Stratton 693508<br>Briggs & Stratton 693059<br>Briggs & Stratton 695708<br>John Deere M83184 | **Starter Gear**<br>For most electric starter motors with plastic gears on Briggs & Stratton engines<br>16 teeth – 1-5/8" OD<br>**Not for use with steel gears** | |
| **43-037** | Briggs & Stratton | **Starter Gear** - NEW<br>Fits Briggs & Stratton 210700 - 312799 Series & 20700 - 252799 Series<br>14-tooth gear | |
| **33-751** | Kohler 41-755-33<br>Kohler 41-755-33S | **Starter Drive Gear**<br>Use with Oregon 33-702, & 33-704<br>10-tooth gear | |
| **33-754** | Kohler 48-755-02<br>Kohler 48-755-40 | **Starter Drive Gear**<br>Use with Oregon 33-707<br>9-tooth gear | |

S

# Starter Parts

| OREGON | Replaces | Description | Product Code | |
|---|---|---|---|---|
| **Starter Gears** | | | | |
| **33-526** | Tecumseh 33844 | **Starter Drive Gear**<br>Use with Oregon 33-716<br>11-tooth gear | | |
| **33-527** | Tecumseh 37050 | **Starter Drive Gear**<br>Use with Oregon® 33-712<br>16-tooth gear | | |
| **Starter Clutch** | | | | |
| **43-404** | Briggs & Stratton 399671<br>Briggs & Stratton 394558<br>Briggs & Stratton 298310<br>Briggs & Stratton 298798<br>Briggs & Stratton 495970<br>Briggs & Stratton 293578 | **Starter Clutch**<br>For most Briggs & Stratton engines except<br>16 HP cast iron engines | | |
| **Starter Cups** | | | | |
| **31-037** | Honda 28451-ZE3-A02 | **Starter Cup**<br>Fits Honda GX340 & GX390 engines | | |
| **31-013** | Honda 28451-ZH7-801 | **Starter Cup**<br>For model GX120 with metal starter dogs<br>Use with Oregon 31-075 | | |
| **31-026** | Honda 28451-ZH8-003 | **Starter Cup**<br>Fits Honda GX160 engines | | |
| **Starter Center Screws** | | | | |
| **31-028** | Honda 90003-ZH8-003 | **Starter Center Screw**<br>Fits Honda GX160 engines | | |
| **31-032** | Honda 90004-ZE2-W01 | **Starter Center Screw**<br>Fits Honda GX240 engines | | |
| **Starter Handles** | | | | |
| **31-909** | Briggs & Stratton 490652<br>John Deere AM107180 | **Two Piece Handle**<br>For newer 8 HP and above engines | | |

S

| OREGON | Replaces | Description | Product Code |
|---|---|---|---|

## Starter Handles

| | | | |
|---|---|---|---|
| **31-908** | Briggs & Stratton 491288<br>Briggs & Stratton 393152<br>John Deere M93586 | **Rubber Handle**<br>For most models w/vertical pull starters<br>Includes handle insert<br>3, 3.5, & 4 HP | |
| **31-900-0** | Briggs & Stratton 66728<br>Briggs & Stratton 490652 | **Rubber Handle with Pin**<br>For use with #4 through #6 rope and<br>older side-pull starters | |
| **31-907** | Briggs & Stratton 398101 | **Mitten Grip Handle**<br>For snow blowers and lawn mowers Toro,<br>Ariens, & others | |
| **31-911** | Honda 28461-ZG0-004 | **Starter Handle**<br>Fits G100 & Oregon® 31-053 | |
| **31-912** | Honda 28461-ZH8-003 | **Starter Handle, Small**<br>Fits GX110, GX120, GX140<br>GX160, & GX240, & Oregon 31-052 | |
| **31-109** | Honda | **Starter Handle**<br>Fits GCV135 & GCV1160 model engines, &<br>Oregon 31-066 | |
| **31-004** | Husqvarna 503-85-39-01 | **Starter Handle**<br>For many Husqvarna chainsaw models | |
| **31-100** | Echo 17722801110<br>John Deere PT2637 | **Starter Handle**<br>For trimmers and chainsaws | |
| **31-910** | Honda 28461-ZE1-003 | **Starter Handle, Rubber**<br>For larger horse power engines | |
| **31-907** | John Deere PT10615<br>Noma 315542<br>Tecumseh 590574<br>Briggs & Stratton 398101 | **Mitten Grip Handle**<br>Fits snow blowers and lawn mowers Toro,<br>Ariens, & others | |

S

# Starter Parts

| OREGON | Replaces | Description | Product Code |
|---|---|---|---|

## Starter Handles

| | | | |
|---|---|---|---|
| **31-913** | Maruyama 261628 | **Starter Handle**<br>Fits MC2300, MC2600, & MC3210 | |
| **31-914** | Stihl 1121-195-3400 | **Starter Handle**<br>Fits chainsaw models 024, 028, 031, 034, 038, 041, & 070, trimmers FS220 & FS280, & blowers BR320 & 3400 | |
| **31-907** | Tecumseh 590574<br>Briggs & Stratton 398101 | **Mitten Grip Handle**<br>For snow blowers and lawn mowers Toro, Ariens, & others | |
| **31-904** | Tecumseh 590387<br>Toro 77-8510<br>John Deere AM30965 | **Rubber Handle**<br>For older side pull starter<br>Includes handle insert | |

## Starter Pawls & Springs

| | | | |
|---|---|---|---|
| **31-057** | Briggs & Stratton 281505<br>Briggs & Stratton 281505S | **Starter Pawl & Spring**<br>For many recoil starters with nylon pawl | |
| **31-091** | Echo 177218-40630 | **Starter Pawl & Spring**<br>For many types of hand held equipment | |
| **31-083** | Honda 28422-ZE2-W01<br>• Code 3678877 | **Starter Ratchet**<br>Fits GX240, GX270, GX340, & GX390 series engines | |
| **31-087** | Honda 28443-ZE2-W01<br>Code 3678901 | **Ratchet Return Spring**<br>Fits GX240, GX270, GX340, & GX390 series engines | |
| **31-025** | Honda 28422-ZH8-013 | **Starter Pawl**<br>Fits Honda GX160 engines | |
| **31-090** | Honda 28486-ZE6-T02<br>Code 3979929 | **Starter Ratchet**<br>Fits GXV160 series engines | |

S

| OREGON | Replaces | Description | Product Code |
|---|---|---|---|

## Starter Pawls & Springs

| | | | |
|---|---|---|---|
| **43-035** | Honda 28442-ZH8-003<br>John Deere M128283 | **Starter Spring** - NEW<br>Fits Honda GX100, GX120, GX160, GX200 & GXV160;<br>John Deere 180A, 180B, 180C, 220A, 220B, 220C, 260B & 260C Greens mowers | |
| **31-011** | Stihl 1124-195-7200 | **Starter Pawl**<br>Fits models 038, 041, 042, 045, 048, 051, & 070 | |
| **31-092** | Stihl 1125-195-7200 | **Starter Pawl**<br>Fits 009, 08, 09, 010, 011, 012, 017, 018, 019, 020, 023, 024, 025, 026, 028, 032, 034, 038, 044, 051, 060, FS35, & FS40 | |

## Starter Pawl Retainers

| | | | |
|---|---|---|---|
| **31-064** | Briggs & Stratton 692299<br>Briggs & Stratton 281503 | **Starter Pawl Retainer**<br>Fits 197400, 197422, 197417, 93412, 93452, & 98902 series engines | |
| **31-027** | Honda 28433-ZH8-003 | **Starter Pawl Retainer**<br>Fits Honda GX160 engines | |

## Starter Pawl Repair Kits

| | | | |
|---|---|---|---|
| **31-108** | Honda | **Starter Pawl Repair Kit**<br>Fits GCV135 & GCV160 model engines, & Oregon® 31-066 | 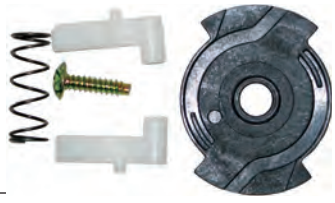 |
| **31-058** | Includes:<br>Honda 28422-ZH8-013<br>• (ratchet)<br>Honda 28443-ZH8-003<br>• (spring)<br>Honda 28441-ZH8-003<br>• (washer)<br>Honda 28433-ZH8-003<br>• (guide ratchet) | **Starter Pawl Repair Kit**<br>Fits models GX110, GX120, GX140, & GX160, & Oregon 31-052 | |
| **43-019** | Kohler 12 757 06-S | **Recoil Starter Dog Kit**<br>Fits CH11–CH640, CV11–CV493, K181, M8-M16, & TH16–TH18 | |

# Starter Parts

| OREGON | Replaces | Description | Product Code | |
|---|---|---|---|---|

## Starter Pulleys

| | | | | |
|---|---|---|---|---|
| **31-063** | Briggs & Stratton 498144<br>Briggs & Stratton 281504 | **Starter Pulley & Spring**<br>Fits Oregon® 31-065 | | |
| **43-200** | Briggs & Stratton 295871<br>John Deere AM35742 | **Starter Pulley**<br>For 5, 7, 8, 10, 11, & 12 HP engines<br>Fits 130202, 130902, 170402, 170702, 190402, 190702, 220702, 252702, & 281702 series<br>OD: 5-3/8"<br>Use with Oregon spring 43-400 | | |
| **43-014** | Briggs & Stratton 493824<br>Briggs & Stratton 492832<br>Briggs & Stratton 492141<br>John Deere AM116270<br>Toro 77-8560 | **Starter Pulley**<br>For Quantum engines<br>5 HP OHV Vanguard<br>Use with Oregon 43-403 replacement spring<br>Spring NOT included<br>OD: 5-7/16" | | |
| **43-100** | Briggs & Stratton 280439<br>Briggs & Stratton 280439S<br>Briggs & Stratton 280117<br>Briggs & Stratton 280469<br>John Deere PT11016 | **Starter Pulley**<br>For 2, 3, 3.5, & 4 HP engines with side pull starters<br>Fits 80202, 92902, & 110902 series<br>Use with Oregon 43-400 replacement spring<br>OD: 4-1/8" | | |
| **31-041** | Briggs & Stratton 499901 | **Starter Pulley**<br>For 10 & 9 CID engines<br>Spring included | | |
| **31-093** | Echo #177202-44330 | **Starter Cup**<br>Fits SRM2305 | | |
| **31-094** | Echo #177215-43130 | **Starter Pulley**<br>Fits SRM3605 | | |
| **55-115** | Echo #177215-44430 | **Starter Pulley**<br>Fits models SMR2400 & SMR2410<br>OD: 2-1/8" | | |

S

| OREGON | Replaces | Description | Product Code | |
|---|---|---|---|---|

## Starter Pulleys

| | | | | |
|---|---|---|---|---|
| **55-811** | Homelite 97768A | **Starter Pulley**<br>Fits XL, Super 2, 240, & 245 series<br>2 9/16" OD<br>Use with Oregon® 43-528 (OBS) replacement spring | | |
| **55-813** | Homelite 98770A | **Starter Pulley**<br>Fits ST145, 155, & 175<br>Use with Oregon 43-532 replacement spring | | |
| **31-023** | Honda 28420-ZH8-003 | **Starter PulleySS**<br>Fits Honda GX160 engines | | |
| **31-034** | Honda 28420-ZE2-W01 | **Starter Pulley**<br>Fits Honda GX340 & GX390 engines | | |
| **31-103** | | **Starter Pulley & Recoil Spring**<br>FIts Oregon 31-066 | | |
| **55-168** | Husqvarna 5037753-01 | **Starter Pulley**<br>Fits brush cutter models 225, 227,<br>232, 235, & 240 | | |
| **31-002** | Husqvarna 5031024-05 | **Starter Pulley**<br>Fits saw models 61, 268, & 272 | | |

S

# Starter Parts

| OREGON | Replaces | Description | Product Code | |
|---|---|---|---|---|

## Starter Pulleys

| | | | | |
|---|---|---|---|---|
| **31-014** | Kawasaki 59101-2110<br>Kawasaki 59101-2103 | **Starter Pulley**<br>For 12.5 HP & 14 HP<br>Fits models FB460V, FC401V, & FC420V | | |
| **55-158** | Kawasaki 59101-2067 | **Starter Pulley**<br>Fits trimmer TD-40, Shindaiwa T25, C25, C35, & CP25, Stihl models FS60, FS61, & FS80, & trimmer FS90 | | |
| **31-115** | Kawasaki 59101-7001 | **Starter Pulley**<br>For 17 HP<br>Fits model FH430V, FH451V, FH480V, FH500V, FH541V, & FH580V | | |
| **43-021** | MTD 753-04232<br>MTD 791-181597 | **Recoil Pulley**<br>Fits MTD, Ryobi, Yard Man, Bolens, & Troy-Bilt 725R, 750R, 765R, 775R, & 790R | | |
| **43-034** | MTD 951-11721<br>MTD 751-11721 | **Recoil Pulley** - NEW<br>Fits MTD Yard Man & Yard Machine | | |
| **31-105** | Mitsubishi KS02037AA002 | **Starter Pulley**<br>Fits TL33, TL43, & TL53 models | | |
| **55-800** | Ryan 683856 | **Starter Pulley**<br>Fits models 265-1, 365-SSR, 284-3, & 264-3, & Lawn Boy 1150, 1400CL, & 1480<br>OD: 2-7/8", Bore: 5/8"<br>Use with Oregon® 43-415 (OBS) replacement spring | | |

S

| OREGON | Replaces | Description | Product Code |
|---|---|---|---|

## Starter Pulleys

| | | | |
|---|---|---|---|
| **55-820** | Ryan 682030<br>Green Machine 167304<br>Snapper 4-2005 | **Starter Pulley**<br>Fits Lawn Boy 3100, 3130, 3160, 1300, 1360, SSI, SSII, 1400, 1460, & 1100, & Snapper models 310 & 311<br>OD: 2-7/8", Bore: 5/8"<br>Use with Oregon 43-415 (OBS) replacement spring | |
| **31-006** | Stihl 1123-195-0400 | **Starter Pulley**<br>Fits models 017, 018, 023, & 025 | |
| **31-010** | Stihl 1128-195-0400 | **Starter Pulley**<br>Fits model 036 | |
| **31-067** | Tecumseh 590618 | **Starter Pulley**<br>Fits Oregon® 31-050 | |

## Recoil Starter Gears

| | | | |
|---|---|---|---|
| **43-011** | Briggs & Stratton 299948<br>Briggs & Stratton 395820<br>John Deere AM35020 | **Starter Gear**<br>For 3, 3.5, & 4 HP engines w/vertical pull starters<br>Fits 92508, 92908, 110908, & 111908<br>Use with Oregon 43-402 spring (OBS) | 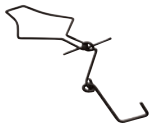 |

Can't find what you're looking for?
Try us online to search the latest products available.

OregonProducts.com

# Starter Parts

## Starter Springs

| OREGON | Replaces | Description | Product Code |
|---|---|---|---|
| **Briggs & Stratton** | | | |
| 43-403 | 262594, 491889 | For 12 CID engines | |
| 43-400-0 | 490179, 294303 | For most 2–16 HP engines | |
| **Echo** | | | |
| 43-509 | 17722042030 | Fits GT1100, GT2102, GT2103, SRM1501, SRM2301, & SRM2310 | |
| **Green Machine** | | | |
| 43-685 | 300285 | Fits 2000, 2500, 3000 (...201446). Also fits TMC | |
| **Hoffco** | | | |
| 43-532 | 214802S | Fits HB25 | |
| **Homelite** | | | |
| 43-532 | A98773 | Fits ST145, ST155, ST175, ST185, ST275, ST285, ST385, & ST485 | |
| **Honda** | | | |
| 43-425 | 28442-ZH8-003 | Fits GX100, GX120, GX160, GX200, GXR120, GXV160, & Oregon® 31-052 | |
| 43-426 | 28442-ZE2-W01 | Fits GX340 & GX390, Oregon 31-060 | |
| 31-081 | 28415-ZG9-802 | Fits GXV160 | |
| **Husqvarna** | | | |
| 43-540 | 50 15 204 01 | Fits 61 Rancher, 162, 181, & 266 | |
| 43-562 | 50 17 631 01 | Fits 136, 141, 240, 245, 334, 335, 336, 338, 339, 36, 40, 41, 45, 50, 51, & 55 | |
| **Jonsered** | | | |
| 43-540 | 501 52 04 01 | Fits 630, 630 Super, & 670 | |
| **Kawasaki** | | | |
| 43-417 | 92145-2090 | Fits FB460V & FC420V | |
| 31-114 | 92-145-7008 | Fits FH430V, FH451V, FH480V, FH500V, FH541V, & FH580V | |
| **Kohler** | | | |
| 43-018 | 12 089 06-S | Fits CH11- CH640, CV11- CV493, K181, M8-M16, & TH16-TH18 | |
| **Red Max** | | | |
| 43-685 | 113075220 | Fits BC220, 26, CHT230, & HT230 | |
| **Robin** | | | |
| 43-685 | A6000-260-0000 | For 22.5 cc engine | |
| **Sachs/Dolmar** | | | |
| 43-685 | A6000 260 0000 | Fits Robin NB23F (22.5cc), SACHS 225 & NB 02-2A | |
| **Shindaiwa** | | | |
| 43-685 | 20000-75140 | Fits T25, C25, C35, & TC25 | |
| **Stihl** | | | |
| 43-694 | 1118-190-0600 | Fits 024, 026, 028, 032, 034, & 08S | |
| 43-699 | 1117-190-0601 | Fits 038, 041, (#5816401...), 045 (5919431...), 048, 050, 051 (#674961...), 056, & 075 | |
| 43-685 | 4112-195-1600 | Fits FS60, 61E, 65AVE, 80, 80E, & 90AVE | |

## Premium Starter Rope - Application Guide

| No. | Size | MM | Application |
|---|---|---|---|
| #3 | 3/32 | — | 2-cycle handheld |
| #3-1/2 | 7/64 | 2.8 | For chainsaws & trimmers |
| #4 | 1/8 | 3 | Lawn Boy & Briggs & Stratton |
| #4-1/2 | 9/64 | 3.5 | Briggs & Stratton |
| #5 | 5/32 | 4 | Tecumseh & Clinton |
| #5-1/2 | 11/64 | 4.5 | Clinton & others |
| #6 | 3/16 | 5 | Briggs & Stratton |
| #8 | 1/4 | 6 | Wisconsin, Kohler, & large H.P. |

## Premium Braid Nylon

| OREGON | No. | Length | Product Code |
|---|---|---|---|
| 31-140 | #4 | 100 ft. | |
| 31-142 | #4-1/2 | 100 ft. | |
| 31-150 | #5 | 100 ft. | |
| 31-152 | #5-1/2 | 100 ft. | |
| 31-160 | #6 | 100 ft. | |
| 31-180 | #8 | 100 ft. | |
| 31-230 | #3 | 200 ft. | |
| 31-232 | #3-1/2 | 200 ft. | |
| 31-240 | #4 | 200 ft. | |
| 31-242 | #4-1/2 | 200 ft. | |
| 31-250 | #5 | 200 ft. | |
| 31-252 | #5-1/2 | 200 ft. | |
| 31-260 | #6 | 200 ft. | |
| 31-540 | #4 | 1,000 ft. | |
| 31-542 | #4-1/2 | 1,000 ft. | |
| 31-550 | #5 | 1,000 ft. | |
| 31-552 | #5-1/2 | 1,000 ft. | |

## Standard Diamond Braid

| OREGON | No. | Length | Product Code |
|---|---|---|---|
| 31-642 | #4-1/2 | 100 ft. | |
| 31-650 | #5 | 100 ft. | |
| 31-732 | #3-1/2 | 250 ft. | |
| 31-740 | #4 | 250 ft. | |
| 31-742 | #4-1/2 | 250 ft. | |
| 31-750 | #5 | 250 ft. | |
| 31-752 | #5-1/2 | 250 ft. | |
| 31-760 | #6 | 250 ft. | |

## Starter Rope with Handle

| OREGON | Size | Length | Handle | Product Code |
|---|---|---|---|---|
| 31-604 | #4-1/2 | 42" | Rubber | |
| 31-635 | #4-1/2 | 88" | Rubber | |

# Steering Parts

| OREGON | Replaces | Description | Product Code |
|---|---|---|---|

## Axles

**76-019**
MTD 17584
MTD 97584

**Right-Hand Front Axle**
Fits many 400 & 600 series tractors
Use with Oregon® 76-018 front pivot bar assembly

**76-021**
MTD 97585A
MTD 17585

**Left-Hand Front Axle**
Fits many 400 & 600 series tractors
Use with Oregon 76-018 front pivot bar assembly

**76-018**
MTD 14608-0637
MTD 753-0642-0637

**Front Pivot Bar Assembly**
Fits most 600 series tractors
Use with Oregon 76-019 front axle, right-hand,
Oregon 76-021 front axle, left-hand, &
Oregon 45-100 bushing

## Ball Joints

**45-103**
John Deere AM38782

**Ball Joint**
Right-hand thread
Rubber grommet seal
Size: 5/16-24 male and female threads
Length: 1-7/16"
Thread length: 11/16"

**45-114**
John Deere AM100644
John Deere AM32868
MTD 723-0179
Ingersoll C12102

**Ball Joint**
Right-hand thread
Rubber grommet seal
RH female: 1/2-20
RH male: 1/2-20
Length: 1-3/8", thread length: 1-1/8"
MTD (1985 & newer)

**45-117**
John Deere AM100645
John Deere AM32869

**Ball Joint**
Left-hand thread
Rubber grommet seal
LH female: 1/2-20
RH male: 1/2-20
Length: 1-3/8", thread length: 1-1/8"

**45-124**
Cub Cadet 923-0448A
MTD 723-0448
MTD 723-0448A
MTD723-0448AP
MTD 923-0448A
MTD OEM-723-0448
Toro 112-0917

**Ball Joint**
Right-hand thread
Rubber grommet seal
RH female: 7/16" -20
RH male: 3/8" -24

S

| OREGON | Replaces | Description | Product Code |
|---|---|---|---|

## Ball Joints

**45-104**
MTD 723-0156
Murray 21031
Snapper 1-0745
Scag 48118
Bobcat 108078
Exmark 373077

**Ball Joint**
Right-hand thread
Rubber grommet seal
Size: 3/8-24 male and female threads
Length: 1-11/16"
Thread length: 7/8"
MTD (1985 & newer)

**45-111**
MTD 723-3018

**Ball Joint**
Fits tractor series (1996 & newer) 200, 400, 500, 600, 700, 800, & 900
Rubber grommet seal
Size: 3/8-24 male and female threads, thread length: 5/8"

**45-132**
MTD 723-0448A

**Ball Joint**
For new style drag links (1997 & newer)
Rubber grommet seal
Use on Oregon® 45-133 (OBS) & 45-119
Size: 7/16-20 female, 3/8-24 male

**45-109**
Roper 8514R

**Ball Joint**
For riders
RH male: 3/8-24
LH female: 1/2-20

## Drag Links

**45-142**
AYP/Husqvarna
532069832
169832

**Drag Link**
For many lawn tractors (2001 & older)

**45-143**
AYP/Husqvarna
532175121
175121

**Drag Link**
For many lawn tractors (2001 & newer)

**45-116**
Murray 91749

**Drag link**
For tractors (1989 & newer)
Length: 17-1/8"

## Steering Arms

**76-100**
MTD 683-0055
MTD 983-0055

**Steering Arm for Lawn Tractors**
Fits 400, 600, & 800 series lawn tractors
(1990 & newer)

## Steering Wheel Supports/Adapters — AYP & Husqvarna

**76-042**
532160395
160395

**Steering Shaft Support**
For many lawn tractors (2001 & older)

S

# Steering Parts

| OREGON | Replaces | Description | Product Code |
|---|---|---|---|

## Steering Wheel Supports / Adapters — AYP & Husqvarna

| | | | |
|---|---|---|---|
| **76-043** | 532437747<br>532186737<br>532110711<br>532100711<br>437747<br>186737<br>110711<br>100711 | **Steering Wheel Adapter**<br>For many lawn tractors (1990 & newer) | |

## Steering Shafts

| | | | |
|---|---|---|---|
| **76-041** | AYP 156546 | **Steering Shaft**<br>For many lawn tractors (1996–2001) | |
| **76-056** | Cub Cadet 738-04262 | **Steering Shaft** - NEW<br>For many lawn tractors<br>OD: 5/8" Length: 25" | 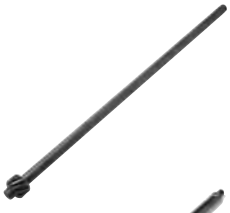 |
| **76-053** | Husqvarna 532 15 65-43 | **Steering Shaft** - NEW<br>For many lawn tractors | |
| **76-052** | Husqvarna 532 15 65-46 | **Steering Shaft** - NEW<br>For many lawn tractors | |
| **76-055** | MTD 938-05078 | **Steering Shaft** - NEW<br>For many lawn tractors | |
| **76-044** | MTD 738-0919A<br>MTD 738-0919<br>MTD 938-0919<br>MTD 753-04517<br>MTD 738-0887 | **Steering Shaft**<br>For many lawn tractors (1995–1996) & (2003–2013) | |

S

| OREGON | Replaces | Description | Product Code |
|---|---|---|---|

## Steering Sector / Steering Gears

**76-051**
MTD 717-1550
MTD 717-1550A
MTD 717-1550B
MTD 717-1550C
MTD 717-1550D
MTD 717-1550E
MTD 917-1550E

**Steering Gear** - NEW
For many lawn tractors
20 tooth

**76-057**
MTD 617-04094

**Steering Gear Assembly** - NEW
For many lawn tractors
24 tooth

**76-040**
AYP / Husqvarna
532136874
136874

**Steering Gear Sector**
For many lawn tractors (2001 & older)
22 tooth

**76-025**
Murray 402075

**Steering Gear Replacement Kit**
For many lawn tractors (1996 & newer)

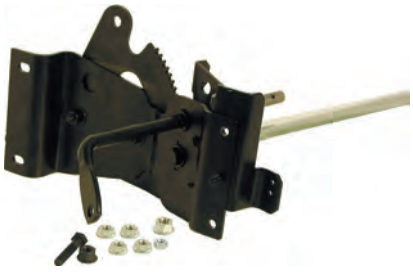

**51-014**
MTD 717-1554

**Pinion Gear**
For many lawn tractors (1999 & newer)
11 tooth

**76-050**
MTD 717-04943

**Pinion Gear** - NEW
For many lawn tractors
11 tooth

**45-144**
AYP 532155106

**Bushing**
For steering on many lawn tractors

S

# Switches

| OREGON | Replaces | Description | Product Code |
|---|---|---|---|

## Ignition Switches

**33-385** Universal

**Ignition Switch**
Five screw terminals, 4-position
Requires 3/4" mounting hole
For magneto equipped engines
with electric starter

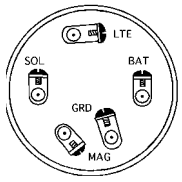


---

**33-375** Ariens 15883

**Ignition Switch**
Plastic snap in bezel
7 terminals, 4-position

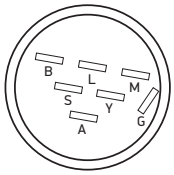


---

**33-386**
AMF 44745/300295
John Deere AM102551
MTD 725-0267A
MTD 925-0267A
Murray 21064PA
Roper 3621R
Scag 48017
Noma 421064
Dixon 4197
Bobcat 48032B
Honda 3510-772-003

**Ignition Switch**
5 spade terminal for magneto ignition
3 position
Requires 5/8" mounting hole

Toro 23-0660
MTD 725-0267
AYP 3612R
AYP 4406R
AYP 365402

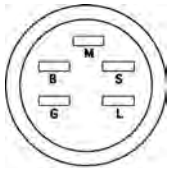


---

**33-397**
AYP 158913
Exmark 543070
Exmark 1-543070
Simplicity 1686637
Snapper 26343
Snapper 7026343

**Ignition Switch**
5-spade terminal
For magneto ignition

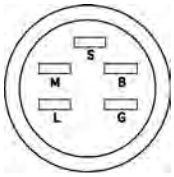


---

**33-376**
AYP 175566
MTD 925-1741

**Ignition Switch**
Plastic snap mount
7 terminals, 4-position
Use with Oregon® 33-094 or 33-099 key and
33-096 connector

**Not for reverse overide applications**

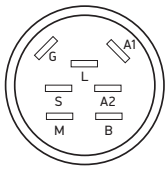


---

**33-152** MTD 925-3163

**Ignition Switch**
6 terminal, 3 position
Requires 5/8" mounting hole

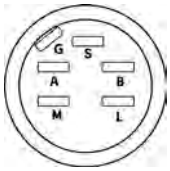


S

| OREGON | Replaces | Description | Product Code |
|---|---|---|---|

## Ignition Switches

**33-106**
Cub Cadet 925-04019
MTD 925-04019
MTD 725-04019

**Ignition Switch**
5 terminal, 3 position

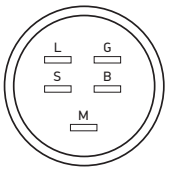


**33-105**

**Ignition Switch**
7 terminal, 4-position
Ignition switch only for 925-04227B &
925-06119 ignition module unit

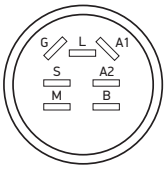


Module not included
(shown for illustration only)

**33-395**
Gravely 18272
Noma 300687

**Ignition Switch**
Requires 5/8" mounting hole
3 position
For magneto ignition

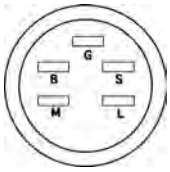


**33-377**
John Deere AM101561

**Ignition Switch**
3 position
6 terminals

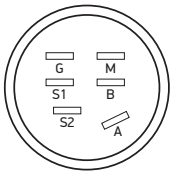


**33-388**
John Deere AM102544
John Deere AM31995

**Ignition Switch**
Fits 110, 112, & 140 tractors with magneto ignition
3 position, 9/16" mounting hole

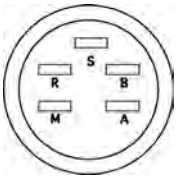


**33-393**
John Deere AM103286
John Deere AM32686

**Ignition Switch**
Fits later 110-120, 140, 200, & 300 series

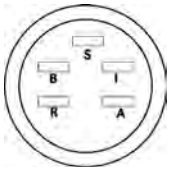


S

# Switches

| OREGON | Replaces | Description | Product Code | |
|---|---|---|---|---|

## Ignition Switches

| | | | | |
|---|---|---|---|---|
| **33-074** | John Deere AM133596<br>MTD 925-04228<br>MTD 725-04228<br>Dixie Chopper 500017 | **Ignition Switch**<br>5 terminal, 3 position | | 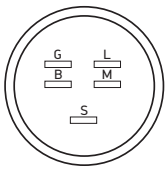 |
| **33-398** | John Deere AM38227 | **Ignition Switch**<br>6 spade terminal<br>3 position | | 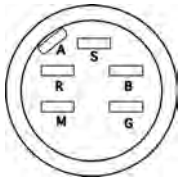 |
| **33-394** | Kohler 25-099-04-S<br>Kohler 25 099 04-S<br>Kohler 25 099 032<br>Kohler 25 099 02 | **Ignition Switch**<br>Magnum Engines<br>Magneto units | | |
| **33-392** | Murray 92377<br>Murray 092377MA<br>Murray MU092377<br>Murray MU092377MA | **Ignition Switch**<br>For front engine riding mowers | | 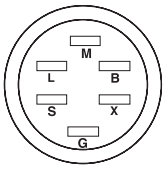 |
| **33-383** | AYP 140301<br>MTD 725-1717<br>Murray 92556<br>Murray 092556<br>Murray 092556MA | **Ignition Switch**<br>7 post switch<br>For engines equipped with fuel shut-off solenoid (1994 & newer) | | 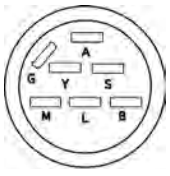 |
| **33-396** | Murray 91846<br>Noma 300687<br>Murray 091846MA | **Ignition Switch**<br>4-position switch<br>5/8" mounting hole | | 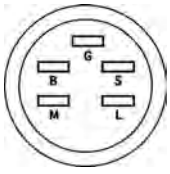 |
| **33-399** | Scag 48798<br>Briggs & Stratton 692318<br>MTD 925-1396 | **Ignition Switch**<br>For 14 & 18 HP twin cylinder engines | | 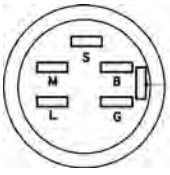 |

S

| OREGON | Replaces | Description | Product Code |
|---|---|---|---|

## Ignition Switches

**33-391**
Snapper 1-8816
Snapper 7018816

**Ignition Switch**
Fits Series 6, 7, 8, 9, 10, & 11 (1988 & newer)
Use on electric start riders without
push button start

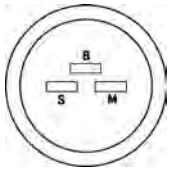


---

**33-024**
Cub Cadet 725-3232
Exmark 403121
Ferris 1521842
General Power 630186
Great Dane D18090
Homelite JA13064-1
Lawnboy 700171
Lawnboy 740015
Murray 056419
Murray 056419MA
Murray 56419
Noma 49907

**Ignition Switch**
2-position, 2 terminals
On/off switch

Noma 56992
Scag 48609
Simplicity 1669804
Snapper 1-7817
Snapper 7017817
Troy Bilt 1758145

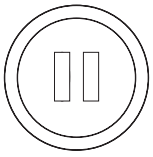

---

**33-387**
Snapper 1-1155
Snapper 7011155

**Ignition Switch**
3 screw terminal
3 position
Requires 5/8" mounting hole

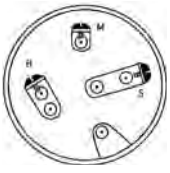


---

**33-379**
Snapper 72684
Snapper 7073684

**Ignition Switch**
Plastic snap in bezel
3 position
5 terminals

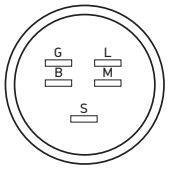


---

**33-389**
Wheel Horse 103990
Kohler 48-099-01
Onan 378-0385

**Ignition Switch**
For battery coil ignition
5 spade terminal
3 position
Requires 5/8" mounting hole

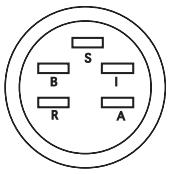


## Ignition Keys

**42-008**
John Deere M40718
Murray 20729
Scag 4817-02
Sears 365410

**Ignition Key**
For 95% of rotary mowers

---

**42-009**

**Display Card** - 20 of 42-008

# Switches

| OREGON | Replaces | Description | Product Code |
|---|---|---|---|

## Ignition Keys

| | | | |
|---|---|---|---|
| **33-099** | Universal<br>AYP 140401/140403<br>Husqvarna 532-14-04-01<br>MTD 725-1745<br>Sears 140403 | **Ignition Key Molded Grip**<br>Use with Oregon® 33-376 and other plastic Delta switches | |
| **33-094** | Universal | **Ignition Key**<br>Molded grip cover and key ring<br>Use with Oregon 33-376 and other plastic Delta switches | |
| **33-089** | MTD 725-1660<br>Tecumseh 35062 | **Plastic Ignition Key**<br>For snow throwers with Tecumseh engines | |
| **33-256** | MTD 951-10630<br>MTD 751-10630<br>MTD 731-05632<br>Cub Cadet 951-10630<br>Cub Cadet 751-10630<br>Cub Cadet 731-05632 | **Ignition Key**<br>Fits 31A model series snow throwers (2008–2014) | |

## PTO Switches

| | | | |
|---|---|---|---|
| **33-093** | Universal | **PTO Switch**<br>Push–pull, snap mount<br>Yellow knob<br>8 terminal | |
| **33-002** | Ariens 522100<br>Ariens 1545600<br>Exmark 633673<br>John Deere AM118802<br>John Deere AM119139<br>Kubota K1211-62230<br>Scag 481635<br>Snapper 2-8542 | **PTO Switch**<br>Push-pull, snap mount<br>5 terminal<br><br><br>Toro 93-9999<br>Toro 95-4108<br>Toro 95-7489 | |
| **33-081** | AYP 174651 | **PTO Switch**<br>Push–pull, snap mount<br>Black knob<br>8 terminal | |
| **33-082** | Bunton/Bobcat 2188153 | **PTO Switch**<br>Push–pull, snap mount<br>Red knob<br>5 terminal | |

S

| OREGON | Replaces | Description | Product Code |
|---|---|---|---|

## PTO Switches

**33-083**

MTD 925-04175
MTD 925-04258

**PTO Switch**
Push–pull, snap mount
Gold tear-drop knob
7 terminal

**33-410**

Scag 48787
Ariens 36024
Grasshopper 604796
Grasshopper 184082
Woods 70422

**PTO Switch**
6-post

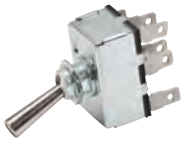

**33-384**

Toro 37-2610
Toro 92-6328
Bobcat 128009
Gravely 45848
Power King 03-7101
Snapper 1-9545

**PTO Switch**
For electromagnetic PTO clutches

Snapper 7019545
John Deere AM39489

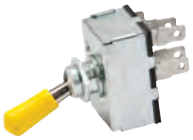

## Safety Switches

**33-382**

MTD 925-0803C
MTD 725-0803C

**Safety Switch**
Plunger type
N.O. / N.C., 2-position, 4 terminals
For models 698 & 699

**33-028**

Ariens 88281
AYP 109553X;
Bobcat 108208
Bush Hog 99073
Dixon 4242
Encore 523034
Exmark 633111
Ferris 22095
High Sierra 1848H
High Sierra 934027

**Safety Switch**
Plunger type
N.O. / N.C.
2-position
4 terminals

High Sierra 2248H
Howard Price 02-425
John Deere AM1288925
MTD 925-3169A

**33-026**

MTD 725-3164A
MTD 925-3164A
AYP 153664
Cub Cadet 725-3164A
Cub Cadet 925-3164A
Kees 101080
Snapper 2-2886
Snapper 7022886
Snapper 1723507

**Safety Switch**
Plunger type
Snap Mount
N.O. / N.C.
2-position
4 terminals

Snapper 1732006
Troy Bilt 1751328

**33-027**

Ariens 30957
AYP 109869X
Exmark 38383
Ferris 21769
Great Dane D38085
John Deere AM108483
Kees 923408
Snapper 2-7225
Snapper 7027225

**Safety Switch**
Fits Ariens Grand Sierra 22 HP models 931038-000101 and 931303-00101 with Kohler engines.
N.C.
2-position, 2 terminals

S

# Switches

| OREGON | Replaces | Description | Product Code | |
|---|---|---|---|---|

## Safety Switches

| | | | | |
|---|---|---|---|---|
| **33-015** | Ariens 357100<br>Bobcat/Bunton 38382<br>John Deere AM104884<br>Murray 24273<br>Murray 024273<br>Murray 024273MA<br>Murray MU24273<br>Scag 481637 | **Safety Switch**<br>Plunger type<br>N.O.<br>2-position<br>2 terminals | | |
| **33-240** | Cub Cadet 925-0268<br>MTD 925-0268<br>MTD 725-0268<br>Noma 41204 | **Safety Switch**<br>Plunger type<br>N.O<br>2-position, 2 terminal<br>Requires 1/2" mounting hole<br>Length: 2-1/8" | | |
| **33-084** | MTD 925-1657A<br>MTD 725-1657A<br>MTD 725-1657<br>Bobcat 38383<br>Cub Cadet 925-1657A<br>Cub Cadet 725-1657A<br>Cub Cadet 725-1657 | **Safety Switch**<br>Plunger type<br>N.O. / N.C.<br>2-position<br>4 terminals | | 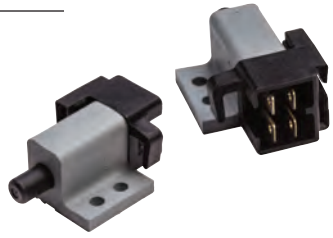 |
| **33-085** | John Deere GY20094<br>Murray 94136<br>Murray 094136<br>Murray 094136MA<br>Murray MU094136<br>Murray MU094136MA<br>Murray MU91436 | **Safety Switch**<br>Plunger type<br>Rail mount<br>N.O. / N.C.<br>2-position<br>4 terminals | | 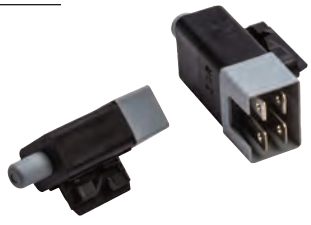 |

## Seat Switches

| | | | | |
|---|---|---|---|---|
| **33-019** | Scag 48717<br>AYP 121305X<br>Cub Cadet 925-3166<br>Exmark 740275<br>John Deere AM104403<br>MTD 725-3166<br>MTD 925-3166 | **Seat Switch**<br>Plunger type<br>Right angle<br>Snap Mount<br>N.C.<br>2-position<br>2 terminals | | |
| **33-090** | Cub Cadet 01003277 | **Seat Switch**<br>Screw mount<br>For seats with 2-3/4"hole<br>N.C.<br>2-position<br>2 terminals | | |

## Switch Connectors

| | | | | |
|---|---|---|---|---|
| **33-086** | Universal | **1 Pole Standard Connector**<br>For many single pole normally open or normally closed switches | | |

S

| OREGON | Replaces | Description | Product Code | |
|---|---|---|---|---|

## Switch Connectors

| | | | | |
|---|---|---|---|---|
| **33-350** | AYP 148699<br>Ariens 23478<br>John Deere M90206 | **Connector**<br>5-way multiple<br>For all terminal ignition switches | | |
| **33-351** | | **Connector**<br>For all of our connectors listed on previous page | | |

## Miscellaneous Switches

| | | | | |
|---|---|---|---|---|
| **33-206** | Universal | **Toggle Switch**<br>For chainsaws & trimmers<br>2 terminal ends | | |
| **33-207** | Universal | **Toggle Switch**<br>For chainsaws & trimmers<br>Single terminal end | | |
| **33-180** | Husqvarna 503 717901 | **Stop Switch**<br>For many Husqvarna and Dolmar chainsaw models | | |
| **33-158** | Husqvarna 503718201 | **On/Off Switch**<br>Fits chainsaw models 232L, 232R, 235FR, 235R, 324LDX, 324LX, 324RX, 326, 336, 339XPT, & 385, for trimmer models 123C, 123HD, 123L, 123LD, 225AI, 225B, 225BX, 225E, 225H, 225HBV, 225L, 225LD, 225 LITE, 225R, 225RD, 225RJ, 227L, 227JD, 227R, 227RD, 227RJ, 232L, 232R, 232RD, 232RL, 235R, 235RL, 240, 240R, & 240RBD | | <br> |
| **33-023** | Toro 29-5560<br>Toro 40-5940 | **Stop Switch**<br>For model S200 and S620 snow blowers<br>Also fits 32", 36", 37", 44", and 52" mid-sized commercial mowers with pull start | | |
| **33-013** | Honda 36100-883-005<br>Honda 36100-ZE1-015 | **Stop Switch**<br>Fits most Honda engines | | |

S

# Switches

| OREGON | Replaces | Description | Product Code | |
|---|---|---|---|---|
| **Oil Sensor Switches** | | | | |
| **33-542** | Honda 34150-ZH7-003 | **Oil Alert Diode Assembly**<br>Fits GX160-390 engines | | |
| **33-540** | Honda 15510-ZE2-033 | **Oil Level Sensor Switch**<br>Fits GX240-390 engines | | |
| **33-541** | Honda 15510-ZE1-033 | **Oil Level Sensor Switch**<br>Fits GX160 engines | | |
| **On/Off Switches** | | | | |
| **33-021** | Snapper 1-2623<br>Snapper 7012623 | **Electric Start Push Button**<br>High amperage switch<br>Use with Oregon® 33-390 | | |

## Can't find what you're looking for?

Try us online to search the latest products available.

OregonProducts.com

S

# SECTIONS T–W


Tiller Parts . . . . . LG 952–954

Tires, Tubes, & Tire Chains . . . . . LG 955–965

Timmer LInes & Heads . . . . . LG 966–1013

Trimmer Brush Cutter Blades. . . LG 1014–1015

Trimmer & Blower Parts . . . . . LG 1016–1028

Wheels . . . . . LG 1029–1047

# Tiller Parts

| OREGON | Replaces | Description | Product Code |
|---|---|---|---|

## Tiller Tines

**84-101** Troy Bilt 1901118

**Tiller Tine Set**
For Pony & Horse model tillers
Includes 8 RH & 8 LH bolo tines
Includes hardware

**84-102** Troy Bilt 1270-1A
AYP 6554J
AYP 4459J

**Tine LH**
For Pony & Horse models

**84-103** Troy Bilt 1270-2A
AYP 6555J
AYP 4460J

**Tine RH**
For Pony & Horse models

## Troy Bilt

**49-050** Troy Bilt 9618

**Tine Axle Seal**
For Horse model tillers
OD: 2", ID: 1.250", thickness: 1/2"

**49-051** Troy Bilt 9621

**Wheel Axle**
For Horse model tillers
OD: 1.5", ID: 1", thickness: 3/8"

## Tech Tip — How to Measure a Tire

**Basic Tire Dimensions**

**Tire Sizes**

- Size designations consist of 2 or 3 numbers separated by X, - or /
- The designations for tires sold by Oregon® are explained below.
- All dimensions are for inflated tires.

### Industrial Sizes

B C D
**410/350-4**
4.1" 3½" 4"

### L & G Tires

A B D
**16x650-8**
16" 6½" 8"

### High-Speed Trailer Tires

B D
**480-12**
4.8" 12"

T

## Innertubes

| OREGON | Size | Valve | Product Code |
|---|---|---|---|
| **4" Tubes** | | | |
| 71-109 | 280 / 250-4 | Bent Valve | |
| 71-274 | 280 / 250-4 | Bent Valve Parallel | |
| 71-401 | 9 x 350-4 | Bent Valve | |
| 71-402 | 9 x 350-4 | Bent Valve Parallel | |
| 71-400 | 410 / 350-4 | Bent Valve | |
| 71-275 | 410 / 350-4 | Bent Valve Parallel | |
| 71-276 | 410 / 350-4 | Straight Valve | |
| **5" Tubes** | | | |
| 71-277 | 340 / 300-5 | Bent Valve | |
| 71-511 | 11 x 400-5 | Bent Valve | |
| 71-403 | 11 x 400-5 | Straight Valve | |
| **6" Tubes** | | | |
| 71-610 | 410 / 350-6 | Straight Valve | |
| 71-600 | 410 / 350-6 | Bent Valve | |
| 71-602 | 410 / 350-6 | Bent Valve Parallel | |
| 71-096 | 13 x 500-6 | Straight Valve | |
| 71-101 | 13 x 500-6 | Bent Valve | |
| 71-250 | 13 x 650-6 | Straight Valve | |
| 71-280 | 13 x 650-6 | Bent Valve | |
| 71-102 | 15 x 600-6 | Straight Valve | |
| 71-405 | 15 x 600-6 | Bent Valve | |
| **7" Tubes** | | | |
| 71-099 | 16 x 800-7 | Straight Metal Valve | |
| **8" Tubes** | | | |
| 71-110 | 300-8 | Straight Valve | |
| 71-103 | 400-8 | Straight Valve | |
| 71-800 | 480 / 400-8 | Straight Valve | |
| 71-801 | 480 / 400-8 | Bent Valve Parallel | |
| 71-415 | 570-8 | Bent Metal Valve | |
| 71-816 | 16 x 650-8 | Straight Valve | |
| 71-406 | 18 x 650-8 | Straight Valve | |
| 71-104 | 18 x 850-8 / 18 x 950-8 | Straight Valve | |
| 71-409 | 20 x 700-8 | Straight Valve | |
| 71-004 | 20 x 800-8 | Straight Valve | |
| 71-407 | 20 x 1000-8 | Straight Valve | |
| 71-098 | 22 x 1100-8 / 21 x 1200-8 | Straight Valve | |
| **9" Tubes** | | | |
| 71-410 | 20 x 1000-9 / 20 x 1100-9 | Straight Valve | |
| 71-097 | 23 x 1200-9 / 25 x 1300-9 | Straight Valve | |
| **10" Tubes** | | | |
| 71-100 | 20 x 800-10 | Straight Valve | |
| 71-411 | 22 x 800-10 | Straight Valve | |
| 71-412 | 22 x 1100-10 | Straight Valve | |
| 71-003 | 20 x 1000-10 | Straight Valve | |

71-274

71-103

71-276

T

## Innertubes

| OREGON | Size | Valve | Product Code |
|---|---|---|---|
| **12" Tubes** | | | |
| 71-417 | 480-12 | Straight Valve | |
| 71-418 | 530-12 | Straight Valve | |
| 71-273 | 600-12 | Straight Valve | |
| 71-105 | 23 x 850 / 950-12 | Straight Valve | |
| 71-408 | 23 x 1050-12 | Straight Valve | |
| 71-283 | 26 x 1200-12 | Straight Valve | |
| **14" Tubes** | | | |
| 71-424-0 | 7.00-14 thru 8.55-14 | Straight Valve | |
| **15" Tubes** | | | |
| 71-425-0 | 7.00-15 thru 9.15-15 | Straight Valve | |
| **16" Tubes** | | | |
| 71-107 | 16 x 2.125 | Schrader Thornproof | |
| **20" Tubes** | | | |
| 71-106 | 20 x 2.125 | Schrader Valve | |
| 71-108 | 20 x 2.125 | Schrader Thornproof | |
| **26" Tubes** | | | |
| 71-111 | 26 x 2.125 | Schrader Thornproof | |
| **Metric Tubes** | | | |
| 71-322 | 200mm x 50mm | Innertube for Scooter | |

71-274

71-103

## Valve Stems

| OREGON | Size | Product Code |
|---|---|---|
| 71-001 | Short | |
| 71-002 | Long | |

71-001 71-002

## Wheelbarrow Rib

| Size | Ply Rating | OREGON | KENDA / CST | CARLISLE |
|---|---|---|---|---|
| 400-6 | 2 | 58-011 | — | — |
| 480/400-8 | 2 | 58-012 | — | — |
| | 4 | 58-013 | — | — |

## Stud Tread

| Size | Ply Rating | OREGON | KENDA / CST | CARLISLE |
|---|---|---|---|---|
| 410/350-4 | 2 | 58-020 | — | — |
| 410/350-5 | 2 | 58-021 | — | — |
| 410/350-6 | 2 | 58-022 | — | — |
| 530/450-6 | 2 | 58-023 | — | — |
| 480/400-8 | 2 | 58-024 | — | — |

T

# Tires, Tubes, & Tire Chains

## AT101 Tread / Tital / Chevron Bar

| Size | Ply Rating | OREGON | KENDA / CST | CARLISLE |
|---|---|---|---|---|
| 21 x 1100 x 8 | 4 | — | — | 70-142 |
| 21 x 1100 x 10 | 4 | — | — | 70-143 |
| 24 x 12 x 12 | 4 | — | — | 70-394 |

Wheel not included

## Agricultural Lug / Power Trac / Bar Tread / Tru Power / Super Lug

| Size | Ply Rating | OREGON | KENDA / CST | CARLISLE |
|---|---|---|---|---|
| 480/400-8 | 2 | 58-050 | — | 70-343 |
| 13 x 500-6 | 2 | 58-397 | — | 70-397 |
| 16 x 650-8 | 4 | 58-360 | — | — |
| 18 x 850 - 10 | 4 | — | — | 70-393 |
| 18 x 950-8 | 2 | — | — | 70-378 |
| 20 x 1000 -8 | 4 | — | — | 70-357 |
| 23 x 850-12 | 4 | — | — | 70-353 |
| 23 x 1050 - 12 | 4 | — | — | 70-380 |
| 26 x 12 - 12 | 4 | — | — | 70-359 |

Wheel not included

## Snow Thrower / Polartrac / Snow Hog Tread

| Size | Ply Rating | OREGON | KENDA / CST | CARLISLE |
|---|---|---|---|---|
| 410/350-4 | 2 | 58-361 | — | 70-361 |
| 410/350-6 | 2 | 58-356 | — | 70-356 |
| 13 x 500-6 | 2 | 58-242 | — | 70-376 |
| 15 x 500-6 | 2 | 58-362 | — | 70-362 |
| 16 x 650-8 | 2 | 58-375 | — | 70-375 |
| 480/400-8 | 2 | 58-358 | — | 70-358 |

## X-Trac

| Size | Ply Rating | OREGON | KENDA / CST | CARLISLE |
|---|---|---|---|---|
| 13 x 500-6 | 2 | — | — | 70-403 |
| 15 x 500-6 | 2 | — | — | 70-404 |
| 16 x 650-8 | 2 | — | — | 70-405 |

## Turf / Chevron / Turf Saver Tread

| Size | Ply Rating | OREGON | KENDA / CST | CARLISLE |
|---|---|---|---|---|
| 9 x 350-4 | 2 | 58-398 | — | — |
| | 4 | — | — | 70-398 |
| 11 x 400-4 | 2 | 58-061 | — | 70-301 |
| 410 / 350-4 | 2 | 58-302 | — | 70-302 |
| 11 x 400-5 | 2 | 58-063 | — | 70-308 |
| 13 x 500-6 | 2 | 58-064 | — | 70-312 |
| | 4 | 58-065 | — | 70-314 |
| 13 x 650-6 | 2 | 58-066 | — | 70-316 |
| | 4 | 58-067 | — | 70-317 |
| 15 x 600-6 | 2 | 58-068 | — | 70-320 |
| | 4 | 58-069 | — | — |
| 480 / 400-8 | 2 | — | — | 70-344 |
| 16 x 650-8 | 2 | 58-071 | — | 70-326 |
| | 4 | 58-072 | — | 70-328 |
| 16 x 750-8 | 2 | 58-088 | — | 70-330 |
| 18 x 650-8 | 2 | — | — | 70-331 |
| | 4 | 58-332 | — | 70-332 |
| 18 x 850-8 | 2 | 58-074 | — | 70-334 |
| | 4 | 58-075 | — | 70-335 |
| 18 x 950-8 | 2 | 58-076 | — | — |
| | 4 | 58-077 | — | 70-338 |
| 18 x 750-8 | 4 | — | — | 70-144 |
| 20 x 800-8 | 2 | 58-078 | — | 70-340 |
| | 4 | 58-087 | — | — |
| 20 x 800-10 | 4 | — | — | — |
| 20 x 1000-8 | 2 | 58-079 | — | 70-339 |
| 20 x 1000-10 | 4 | — | — | 70-349 |
| 22 x 950-12 | 2 | — | — | 70-145 |
| 23 x 850-12 | 4 | — | — | 70-352 |
| 23 x 950-12 | 2 | — | — | 70-355 |
| 23 x 1050-12 | 4 | — | — | 70-351 |
| 24 x 1200-12 | 2 | — | | 70-146 |

# Tires, Tubes, & Tire Chains

## Turf Saver Tread II

| Size | Ply Rating | OREGON | KENDA / CST | CARLISLE |
|---|---|---|---|---|
| 18x850-8 | 2 | — | — | 70-147 |
| 20x800-8 | 2 | — | — | 70-148 |

Wheel not included

## Straight Rib / Golf Rib Tread

| Size | Ply Rating | OREGON | KENDA / CST | CARLISLE |
|---|---|---|---|---|
| 11x400-5 | 2 | 58-110 | — | — |
| | 4 | — | — | 70-307 |
| 13x500-6 | 4 | 58-112 | — | 70-315 |
| 13x650-6 | 4 | 58-119 | — | 70-409 |
| 15x600-6 | 4 | 58-114 | — | 70-321 |
| 16 x 650-8 | 4 | 58-329 | — | 70-329 |
| 18x850-8 | 4 | 58-117 | — | — |
| 18x950-8 | 4 | — | — | 70-150 |

## Smooth Tread

| Size | Ply Rating | OREGON | KENDA / CST | CARLISLE |
|---|---|---|---|---|
| 9x350-4 | 4 | 58-131 | — | 70-306 |
| 410/350-4 | 4 | 58-132 | — | — |
| 410/350-5 | 4 | 58-133 | — | — |
| 13x500-6 | 4 | 58-135 | — | 70-311 |
| 13x650-6 | 4 | 58-399 | — | 70-399 |
| 18x950-8 | 4 | — | — | 70-377 |

## Rib High-Speed Trailer

| Size | Load Range | OREGON | KENDA / CST | CARLISLE |
|---|---|---|---|---|
| 4.80-8 | LRB | 58-150 | — | 70-149 |
| 5.7-8 | LRB | — | — | 70-151 |
| | LRC | — | — | 70-152 |
| 4.80-12 | LRB | — | — | 70-153 |
| 18.5x8.50-8 | LRB | — | — | 70-157 |

## Sawtooth Tread

| Size | Ply Rating | OREGON | KENDA / CST | CARLISLE |
|---|---|---|---|---|
| 280/250-4 | 4 | 58-001 | — | — |
| 410/350-4 | 2 | 58-040 | — | — |
| | 4 | 58-041 | — | — |
| 410/350-6 | 2 | 58-043 | — | — |

## Turf / Turf Master Tread

| Size | Ply Rating | OREGON | KENDA / CST | CARLISLE |
|---|---|---|---|---|
| 13x650-6 | 4 | — | — | 70-364 |
| 15x600-6 | 4 | — | — | 70-365 |
| 15x650-8 | 2 | — | — | 70-396 |
| 16x650-8 | 4 | — | — | 70-366 |
| 16x750-8 | 4 | — | — | 70-367 |
| 18x650-8 | 4 | — | — | 70-392 |
| 18x850-8 | 4 | — | — | 70-368 |
| 18x950-8 | 4 | — | — | 70-369 |
| 20x1000-8 | 4 | — | — | 70-370 |
| 20x1000-10 | 4 | — | — | 70-371 |
| 22x950-12 | 4 | — | — | 70-154 |
| 23x850-12 | 4 | — | — | 70-156 |
| 23x950-12 | 4 | — | — | 70-372 |
| 23x1050-12 | 4 | — | — | 70-373 |
| 26x1200-12 | 4 | — | — | — |

Wheel not included

Can't find what you're looking for?
Try us online to search the latest products available.

OregonProducts.com

# Tires, Tubes, & Tire Chains

## Magnum (Cheng Shin) / Super Turf (Kenda)

| Size | Ply Rating | OREGON | KENDA / CST | CARLISLE |
|---|---|---|---|---|
| 11 x 400-5 | 4 | — | 66-200 | — |
| 410/350-4 | 4 | — | 68-213 | — |
| 15 x 600-6 | 4 | — | 66-202 | — |
| 16 x 650-8 | 4 | — | 66-203 | — |
| 16 x 750-8 | 4 | — | 68-204 | — |
| 18 x 750-8 | 4 | — | 68-214 | — |
| 18 x 850-8 | 4 | — | 66-205 | — |
| 18 x 950-8 | 4 | — | 66-206 | — |
| 20 x 1000-8 | 4 | — | 66-207 | — |
| 20 x 1050-8 | 4 | — | 68-373 | — |
| 23 x 850-12 | 4 | — | 66-208 | — |
| 23 x 950-12 | 4 | — | 68-374 | — |
| 23 x 1050-12 | 4 | — | 66-209 | — |
| 24 x 1200-12 | 4 | — | 68-211 | — |
| 26 x 1200-12 | 4 | — | 68-210 | — |

Wheel not included

## Turf Smart Tread

| | | | | |
|---|---|---|---|---|
| 18 x 8.50-8NHS | 4 | — | — | 70-415 |
| 18 x 8.50-10NHS | 4 | — | — | 70-420 |
| 20 x 8.00-10NHS | 4 | — | — | 70-419 |
| 20 x 10.00-8NHS | 4 | — | — | 70-418 |
| 20 x 10.00-10NHS | 4 | — | — | 70-417 |
| 22 x 11.00-10NHS | 4 | — | — | 70-410 |
| 22 x 9.50-12NHS | 4 | — | — | 70-416 |
| 23 x 9.50-12NHS | 4 | — | — | 70-421 |
| 23 x 10.50-12NHS | 4 | — | — | 70-414 |
| 24 x 9.50-12NHS | 4 | — | — | 70-413 |
| 24 x 12.00-12NHS | 4 | — | — | 70-412 |
| 26 x 12.00-12NHS | 4 | — | — | 70-411 |

Wheel not included

T

## Turf CTR

| Size | Ply Rating | OREGON | KENDA / CST | CARLISLE |
|---|---|---|---|---|
| 22 x 1100-8 | 4 | — | — | 70-363 |

Wheel not included

## Turf Mate

| Size | Ply Rating | OREGON | KENDA / CST | CARLISLE |
|---|---|---|---|---|
| 20 x 1000-8 | 4 | — | — | 70-379 |

Wheel not included

## Golf Tread

| Size | Ply Rating | OREGON | KENDA / CST | CARLISLE |
|---|---|---|---|---|
| 18 x 850-8 | 4 | 58-160 | — | — |

## Links Golf Cart Tire

| Size | Ply Rating | OREGON | KENDA / CST | CARLISLE |
|---|---|---|---|---|
| 18 x 850-8 | 4 | — | — | 70-333 |

Wheel not included

## Scorpion / ATV Knobby Tread

| Size | Ply Rating | OREGON | KENDA / CST | CARLISLE |
|---|---|---|---|---|
| 145/70-6 | 2 | 58-300 | — | — |
| 18 x 950-8 | 2 | — | — | — |
| 25 x 1200-9 | 2 | — | — | — |

T

# Tires, Tubes, & Tire Chains

## All Trail II (Carlisle)

| Size | Ply Rating | OREGON | KENDA / CST | CARLISLE |
|---|---|---|---|---|
| 22 x 950-10 | 4 | — | — | 70-161 |
| 23 x 1050-12 | 4 | — | — | 70-162 |
| 24 x 950-10 | 4 | — | — | 70-163 |
| 24 x 1050-10 | 4 | — | — | 70-164 |
| 25 x 900-12 | 4 | — | — | 70-165 |
| 25 x 1100-12 | 4 | — | — | 70-166 |

Wheel not included

## AT489 Tread (Carlisle)

| Size | Ply Rating | OREGON | KENDA / CST | CARLISLE |
|---|---|---|---|---|
| 25 x 800-12 | 4 | — | — | 70-158 |
| 25 x 1000-12 | 4 | — | — | 70-159 |
| 25 x 1100-12 | 4 | — | — | 70-160 |

Wheel not included

## Solid Foam, Flat-Free Tires

| OREGON | Size | Type | Product Code |
|---|---|---|---|
| **Sawtooth** | | | |
| 70-706 | 410 / 350-4 | solid foam | |
| **Smooth Tread** | | | |
| 70-701 | 9 x 350-4 | solid foam | |
| 70-710 | 11 x 400-5 | solid foam | |

- Maintenance free, flat-free, resists cracking, oil and gasoline resistant.
- Will not de-form.

Sawtooth

Smooth Tread

## Tire Wrap

| OREGON | Replaces | Description | Product Code |
|---|---|---|---|
| **70-422** | Toro 53-7740 | **Tire Wrap**<br>For Toro walk-behind & self-propelled mowers<br>OD: 8", width: 2" | |

## Tire Chains

| OREGON | Spacing | Size / Type | Product Code |
|---|---|---|---|
| **Lawn & Garden Tire Chains (twist link style)** | | | |
| 67-012 | 2 | 410 / 350-4<br>340 / 350-5 | |
| 67-020 | 2 | 410 / 350-5<br>12.25 x 350-6 | 12 x 350-6<br>410 / 350-6 |
| 67-009 | 2 | 410 / 350-6 (Deep Lug - Snow Hawg) | |
| 67-003 | 2 | 530-450-6 | |
| 67-010 | 2 | 13 x 500-6 | |
| 67-007 | 2 | 13-500-6 (Deep Lug - Snow Hawg) | |
| 67-013 | 2 | 480 / 400-8 | |
| 67-008 | 2 | 480 / 400-8 (Deep Lug - Snow Hawg) | |
| 67-001 | 2 | 16 x 650-8<br>15 x 600-6 | |
| 67-004 | 2 | 16 x 650-8 (Deep Lug - Snow Hawg) | |
| 67-005 | 2 | 18 x 850-8 | |
| 67-018 | 2 | 18 x 950-8 | |
| 67-017 | 2 | 20 x 800-10<br>20 x 800-8 | |
| 67-002 | 2 | 20 x 1000-10<br>20 x 1000-8 | |
| 67-014 | 2 | 23 x 850-12 | |
| 67-015 | 2 | 23 x 950-12<br>23 x 1050-12 | |
| 67-011 | 4 | 23 x 950-12<br>23 x 1050-12 | |
| 67-019 | 2 | 12 x 12<br>26 x 1200-12<br>27 x 1200-12 | |
| **ATV Tire Chains (v-link style)** | | | |
| 67-021 | 2 | 22 x 1100-8<br>25 x 1100-8<br>22 x 1000-9 | 22 x 1000-10<br>22 x 1100-10<br>22 x 800-11 |
| 67-022 | 2 | 24 x 1100-8<br>24 x 1100-9<br>25 x 1200-9<br>24 x 1300-9<br>25 x 1300-9<br>25 x 1350-12 | 25 x 1000-10<br>25 x 1100-10<br>25 x 1200-10<br>25 x 1000-12<br>23 x 1050-12 |
| 67-026 | 2 | 24 x 1100-10<br>24 x 1000-11<br>25 x 800-12 | 24 x 900-11<br>23 x 1000-12 |
| 67-024 | 4 | 24 x 1100-8<br>25 x 1100-10<br>25 x 1000-12<br>24 x 1100-9<br>25 x 1200-9<br>25 x 1350-12 | 25 x 1000-10<br>25 x 1200-10<br>23 x 1050-12<br>24 x 1300-9<br>25 x 1300-9 |

**PLEASE NOTE**: Because of variances in tire dimensions, tire chains may require shortening to fit your tire properly. Chains should not fit too tightly to the tire. They should be just snug enough to stay on during use. Bungee cords may be used to add tension.

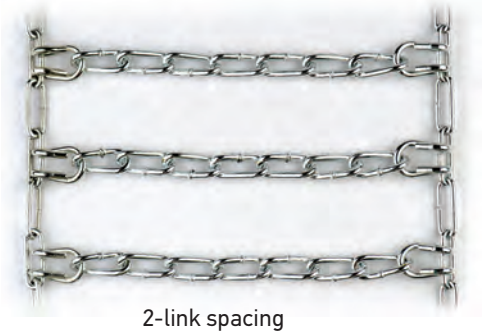

2-link spacing

Twisted link detail

4-link spacing

V-link detail

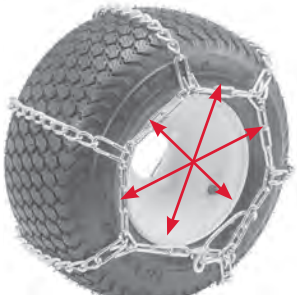

Bungee cords may be used here to add tension.

T

Trimmer Line and Heads

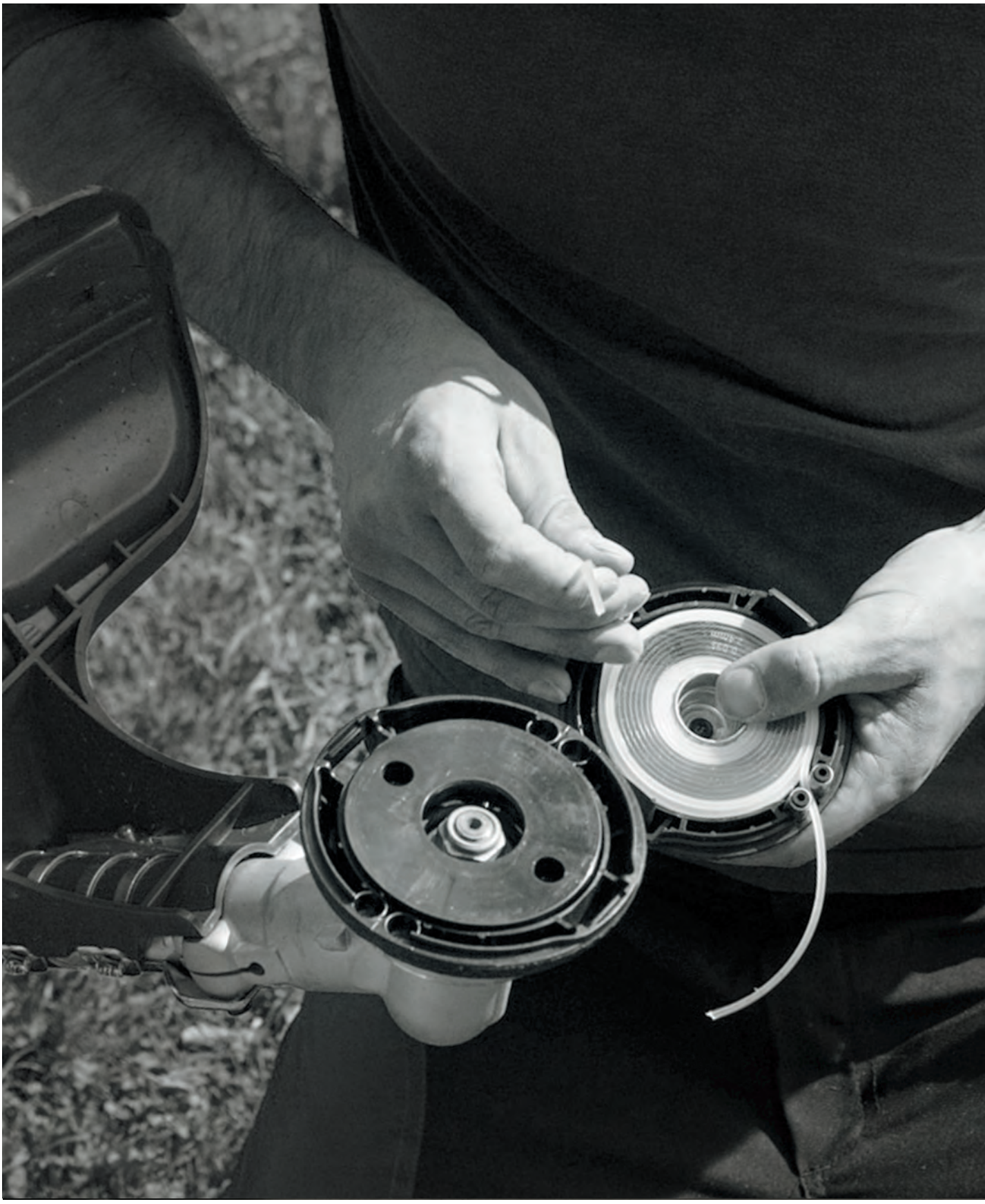

Gator® SpeedLoad™ . . . . . LG 968–978
BioTrim™ Trimmer Line . . . . . LG 978
Platinum Gatorline™ . . . . . LG 979
SuperTwist Magnum Gatorline™ . . . . . LG 979
Magnum Gatorline™ . . . . . LG 980
Gatorline™ . . . . . LG 981
Oregon® Trimmer Line . . . . . LG 982
Gatorline™ Pre-Cut Lengths, Red Gatorline™ . . . . . LG 983
FlexiBlade™ Trimmer Line . . . . . LG 984
Bump and Feed Replacement Trimmer Heads . . . . . LG 985–994
Quick Load Replacement Trimmer Heads . . . . . LG 995–996
Trimmers and Brushcutter Safety Information . . . . . LG 997
Trimmer Head Application Chart . . . . . LG 998–1013
Brush Cutter Blades . . . . . LG 1014–1015

# Gator® SpeedLoad™

## Trimmer Head & Line System

**FAST, EASY, DURABLE**

It's a revolutionary and Oregon® exclusive string trimmer cutting system.
The system is composed of a durable plastic head and disk shaped line.
The self-contained trimmer line disk makes reloading line fast and easy.

**FAST, EASY, DURABLE**

OregonProducts.com/GSL

# Why Gator® SpeedLoad™

Traditional string trimmer, trimmer lines and heads are ***sources of frustration.***

A survey made in May 2015 with 300 professionals and 300 homeowners has indicated that more than 70% of string trimmer users are confronted with problems when dealing with string trimmer accessories.

## NO WINDING, NO HASSLE

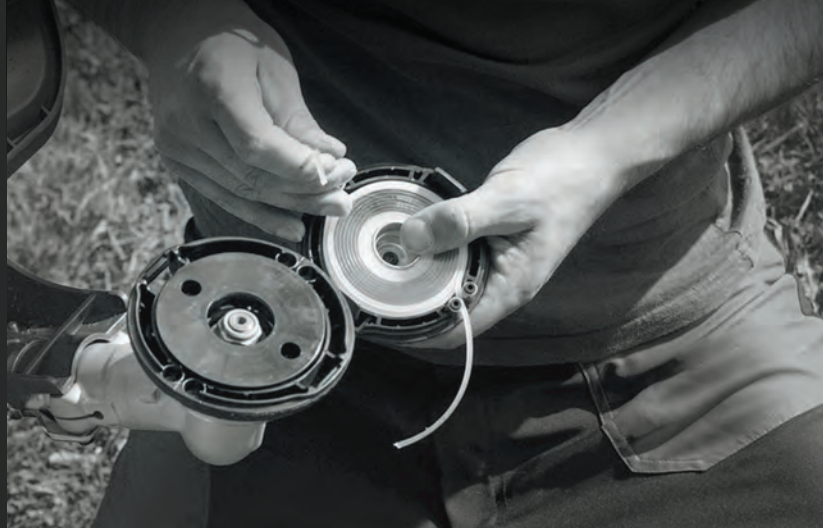

*As a great example of Oregon's best-in-class innovation, Gator SpeedLoad heads are available in 2 different package types.*

### RETAIL PACKAGING

The two smaller heads are in a clamshell while the large head is in a cardboard box.

**24-200**

**24-250**

**24-500**

### DEALER PACKAGING

Meant for dealerships and online sales. The two heads will be available in economy cardboard boxes.

**24-200-B**

**24-250-B**

Dealer boxes come in a displayable shipper that folds into an attractive counter display box and holds 6 heads per shipper.

# Gator® SpeedLoad™

**Load in less than 20 seconds**

**Lasts up to twice as long**

**Tested & approved by the largest US landscaping company**

**UNIVERSAL**
Fits most gas brushcutters & trimmers

**PLASTIC HEAD**
Improved toughness,
extremely resistant to wear & shocks

**NO LOOSE PARTS**
Eliminates the hassle and expense of replacing lost parts

**DISK SHAPED LINE**
Each disk represents a full load
No need to deal with messy spools anymore
Fits inside of a pocket and easy-to-carry
Small size means less inventory space
Reduced packaging

**HEAT-TREATED DISK**
Twice the resistance of standard line

**SIDE TAPS**
Easy to open, no tools needed

**TAP AND GO**
Advance the line while trimming

T

# 3 Trimmer Heads Fit Most Trimmers

*Including popular models from...*

**Homelite**
**Ryobi**

Straight Shaft

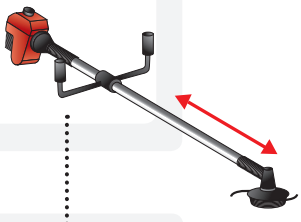

**Homelite**
**Ryobi**
**Echo**
**Husqvarna**
**Stihl**

Curved Shaft

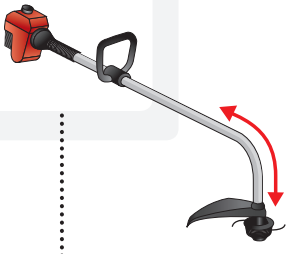

**> 25 cc**

**24-200**

**Echo**
**Husqvarna**
**Stihl**

Straight Shaft

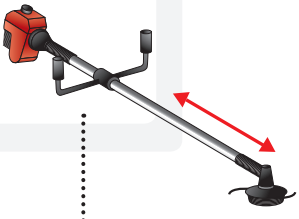

**< 33 cc**

**24-250**

**> 33 cc**

**24-500**

| Pack Quantity | 0.080" 2,0 mm | 0.095" 2,4 mm | 0.095" 2,4 mm | 0.118" 3,0 mm |
|---|---|---|---|---|
| **3 disks** | 24-280-03 | 24-295-03 | 24-595-03 | 24-518-03 |
| **10 disks** | 24-280-10 | 24-295-10 | 24-595-10 | 24-518-10 |
| **25 disks** | 24-280-25 | 24-295-25 | 24-595-25 | 24-518-25 |

For the complete listing of makes and models, refer to ***Gator® SpeedLoad™ Application Chart*** on the following pages.

T

# Gator® SpeedLoad™

## 4-1/4" Gator SpeedLoad Trimmer Heads

581647

| OREGON | Description | Product Code |
|---|---|---|
| 24-200 | **4-1/4" Gator SpeedLoad Trimmer Head – Display Package**<br>Diameter: 4-1/4" (105mm), weight: 252 g. Use with Oregon® small diameter disks. Fits most curved and straight-shaft Ryobi, Homelite, Toro, Troy Bilt and Bolens trimmers. Also fits Stihl curved-shaft units. **English and Spanish language**<br><br>Mounting hardware: extended adaptor, 5/16"-18 RH bolt, 5/16"-18 LH bolt, and 8mm x 1.25 RH nut. | |
| 24-200-C | Display Package of Oregon of 24-200 for Canada<br>**English and French language** | |
| 24-250 | **4-1/4" Gator SpeedLoad Trimmer Head – Display Package**<br>Diameter: 4-1/4" (105mm), weight: 252 g. Use with Oregon small diameter disks. Fits most curved and straight-shaft Echo, Husqvarna, Shindaiwa, Efco, and other trimmers. Also fits Stihl straight-shaft units. **English and Spanish language**<br><br>Mounting Hardware: (#1) 8 mm x 1.25 LHM/F, (#2) 10 mm x 1.25 LHM/F, (#3) 7 mm x 1.0 LHM, 10 mm x 1.0 LHF, (#4) 3/8-24 RHM & 8 mm x 1.25 RHM | |
| 24-250-C | Display Package of Oregon of 24-250 for Canada<br>**English and French language** | |
| 24-275 | **4-1/4" Gator SpeedLoad Trimmer Head – Display Package**<br>Diameter: 4-1/4" (105 mm), weight: 252 g. Use with Oregon small diameter disks. For use on straight-shaft trimmers and brush cutters only. Comes with washers to fit Stihl, Husqvarna, Echo, and other brushcutters. Designed to fit brushcutter models that only have 20 mm or 25 mm mounting hubs. Brushcutter models are units that can also accept brushcutter blades.<br><br>Included components: (1) 8mm, (1) 10mm, (1) 12mm, and (2) 16mm washers, and (1) reducer bushing to go from 20mm to 25mm. Nut to secure trimmer head to gear case is not included. | |

## 5" Gator SpeedLoad Pro Trimmer Head

| | | |
|---|---|---|
| 24-500 | **5" Gator SpeedLoad Trimmer Head – Display Package**<br>Diameter: 5" (130mm), weight: 354 g. Use with Oregon large diameter disks. Fits most straight-shaft Echo, Stihl, Husqvarna, Shindaiwa, Efco, and other trimmers<br>**English, French and Spanish language**<br><br>Mounting Hardware: (#1) 8 mm x 1.25 LHM/F, (#2) 10 mm x 1.25 LHM/F, (#3) 7 mm x 1.0 LHM, 10 mm x 1.0 LHF | |
| 24-550 | **5" Gator SpeedLoad Trimmer Head – Display Package**<br>Diameter: 5" (130 mm), weight: 354 g. Use with Oregon large diameter disks. For use on straight-shaft trimmers and brush cutters only. Comes with adaptor washers to fit Stihl, Husqvarna, Echo, and other brushcutters. Designed to fit brushcutter models that only have 20 mm or 25 mm mounting hubs. Brushcutter models are units that can also accept brushcutter blades.<br><br>Included components: (1) 8mm, (1) 10mm, (1) 12mm, and (2) 16mm washers, and (1) reducer bushing to go from 20 mm to 25 mm. Nut to secure trimmer head to gear case is not included. | |

T

## Replacement Trimmer Line

| OREGON | Description | Product Code |
|---|---|---|
| **Small Replacement Disks for Oregon® 24-200, 24-250, & 24-275** | | |
| 24-280-03 | (3) – 0.080" (2.0 mm), Small Diameter Disks | |
| 24-280-10 | (10) – 0.080" (2.0 mm), Small Diameter Disks | |
| 24-280-25 | (25) – 0.080" (2.0 mm), Small Diameter Disks | |
| 24-295-03 | (3) – 0.095" (2.4 mm), Small Diameter Disks | |
| 24-295-10 | (10) – 0.095" (2.4 mm), Small Diameter Disks | |
| 24-295-25 | (25) – 0.095" (2.4 mm), Small Diameter Disks | |
| **Large Replacement Disks for Oregon 24-500 & 24-550** | | |
| 24-595-03 | (3) – 0.095" (2.4 mm), Large Diameter Disks | |
| 24-595-10 | (10) – 0.095" (2.4 mm), Large Diameter Disks | |
| 24-595-25 | (25) – 0.095" (2.4 mm), Large Diameter Disks | |
| 24-518-03 | (3) – 0.118" (3.0 mm), Large Diameter Disks | |
| 24-518-10 | (10) – 0.118" (3.0 mm), Large Diameter Disks | |
| 24-518-25 | (25) – 0.118" (3.0 mm), Large Diameter Disks | |

## Replacement Parts

| OREGON | Replacement Parts | Fits | Product Code |
|---|---|---|---|
| 24-101 | Bump Knob with Screw | 24-200 & 24-250 | |
| 24-102 | Lower Assembly | 24-200 & 24-250 | |
| 24-103 | Bump Knob with Screw | 24-500 | |
| 24-104 | Lower Assembly | 24-500 | |

## Adaptors & Mounting Nuts for Arbors

| OREGON | Description | Product Code |
|---|---|---|
| **Adaptor** | | |
| 24-009 | 12 mm x 1.75 LHF Adaptor<br>Use with Oregon 24-250 & 24-500 Gator SpeedLoad heads | |
| **Mounting Nuts for Oregon 24-275 & 24-550** | | |
| 24-008 | 8 mm x 1.25 LHF Nut<br>This is not an arbor bolt and is only to be used for mounting Gator SpeedLoad trimmer heads to brushcutters.<br>Not to be used for mounting brushcutter blades. | |
| 24-010 | 10 mm x 1.25 LHF Nut<br>This is not an arbor bolt and is only to be used for mounting Gator SpeedLoad trimmer heads to brushcutters.<br>Not to be used for mounting brushcutter blades. | |
| 24-011 | 10mm x 1.0 LHF nut<br>This is not an arbor bolt and is only to be used for mounting Gator SpeedLoad heads to brushcutters.<br>Not to be used for mounting brushcutter blades. | |
| 24-012 | 12mm x 1.75 LHF nut<br>This is not an arbor bolt and is only to be used for mounting Gator SpeedLoad heads to brushcutters.<br>Not to be used for mounting brushcutter blades. | |

# Gator® SpeedLoad™ Application Chart

| OEM Model Numbers | 4-1/4" | 5" |
|---|---|---|
| **Alpina** | For Canada, add -C | |
| 21, 25, 30, 34, 34D, 34F, 42, 42D, 42F, 52, 52D, 52F, 160, 170, 180, 200, 210 | 24-250 | 24-500 |
| **Ariens** | | |
| BC-350, BC-400, TB-220E, TB260 | 24-250 | 24-500 |
| **Arimitsu** | | |
| AC-ZEK, ACC-17, ACD-17, ACD-18, ACE-30, AM-31, AM31K, AM40, AM-50, ACC-15, AM-16D, AM-24D | 24-250 | 24-500 |
| **Astron** | | |
| S250 (1984, 1986), S150 (1986), S250(1983), 256E, KFS4 SERIES, KFS12, KFS22, KFS24, P750, PK2400E, PK3300E, S250 (1988) | 24-250 | |
| **Black+Decker** | | |
| 82255, 82257, 82267. 8271-04, 8289-4 | 24-250 | |
| **Blue Max** | | |
| 52623 | 24-250 | 24-500 |
| **Bolens** | | |
| BL250 | 24-250 | |
| BL100, BL110, BL150, BL160 | 24-200 | |
| **Brush King** | | |
| BK32, BK32LT, BK49, BK85, BK100 | 24-250 | |
| **Bunton** | | |
| LBS 18K, LB 24S K | 24-250 | |
| **Cub Cadet** | | |
| CC212, CC330, CC350, CS202, ST202, ST4125, ST4175 | 24-200 | |
| BC210, BC280, BC490, BC509, BC2090, BC5090, CC370, SS270, SS418, SS470, ST227S, ST228, ST426S, ST428 | 24-250 | |
| **Danarm** | | |
| 32, 35, 40, 50, MK2, MK23E, MK3, TORNADO, WHIPPER MK3 | 24-250 | |
| **Dolmar (see SACHS)** | | |
| BC-225, BC250, BC337, BC377, BC400, LT-154, LT225, LT250BC300, LT250, LT250, MS220, MS2300, MS2600, MS3100, MX20C, MS2501, MS28210, MS3210, NB2, NBA231, NB, NB01F, NB02, NB16F, NB2, NB211, NBF171, NB26, NB31, MS340, NB03, NB04, NB26, NB40, NB411, NB50, PRO370, PRO400, SD330 | 24-250 | 24-500 |
| BC210, BC212, BDC212, LT16, LT20, | 24-250 | |
| **Echo** | | |
| GT100, GT140, GT140A, GT140B, GT160, GT160AE, GT200, GT200A, GT200B, GT200BE, GT200CE, GT225, GT225C, GT225IC, GT225L, GT251, GT1000, GT1100, GT1100A, GT2000, GT2000SB, GT2100, GT2101, GT2102, GT2103, GT2200, GT2301, GT2400, SRM2000, SRM210AE | 24-250 | |
| GT2010, PAS225VP, PAS225VPC, RMA2530, SRA2190, SRM140, SRM140A, SRM140D, SRM140DA, SRM200A, SRM200AE, SRM200BE, SRM200CE, SRM200D, SRM200DA, SRM200DB, SRM200DE, SRM202, SRM202DA, SRM202FA, SRM210, SRM210AE, SRM210E, SRM210I, SRM210SB, SRM210U, SRM220, SRM225, SRM225C, SRM225I, SRM225IC, SRM225SB, SRM225U, SRM226T, SRM230, SRM230S, SRM230SP, SRM230SPC, SRM250, SRM250E, SRM250EL, SRM250EU, SRM251, SRM260, SRM260S, SRM260U, SRM261, SRM265, SRM265S, SRM265T, SRM265U, SRM266, SRM266S, SRM266SC, SRM266T, SRM266TC, SRM1500, SRM1500A, SRM1501, SRM2090, SRM2090L, SRM2090U, SRM2010L, SRM2100, SRM2100SB, SRM2101, SRM2110, SRM2200, SRM2201, SRM2300, SRM2301, SRM2350, SRM2400, SRM2400SB, SRM2410, SRM2450, SRM2500, SRM2501, SRM2501S, SRM2502, SRM2510, SRM2530, SRM2601 | 24-250 | |
| CLS4600, RM310, RM380, RM460, SRM280, SRM280C, SRM280S, SRM280SC, SRM280T, SRM280TC, SRM280U, SRM280UC, SRM300, SRM300AE, SRM300AE1, SRM300E, SRM300E1, SRM300U, SRM302, SRM302ADX, SRM302BDX, SRM303E, SRM310, SRM310U, SRM311, SRM311S, SRM311U, SRM330, SRM340, SRM343, SRM343SL, SRM350, SRM400, SRM400AE, SRM400B, SRM400BE, SRM400E, SRM400U, SRM402DE, SRM410U, SRM500, SRM501, SRM3000, SRM3001, SRM3010, SRM3100, SRM3100S, SRM3110, SRM3400, SRM3410, SRM3500, SRM3550, SRM3800, SRM4600 | 24-250 | 24-500 |
| **Efco** | | |
| 200, 220IC, 260, 260D, 261, 261A, 300A, 300AIC, 301, 310, 350, 410, 400A, 460, 460AVS, 835, 2201C, 2601C, 2601CAV, 26501CAV, 8060, 8100, 8200, 8220IC, 8300, 8350, 8400, 8400IC, 8420, 8420IC, 8425, 8510, 8510IC, 8515, DS2200S, DS2200T, DS2200TR, DS2400S, DS2400T, DS2700S, DS2800S, DS2800T, DS3000T, DS3500S, DS3500T, JET200, JET300, JET301, JET350, JET400, JET401, JET450, JET460 | 24-250 | 24-500 |
| **Flymo** | | |
| D2 | 24-250 | 24-500 |
| **Green Machine** | | |
| 1200, 1500, 1600, 1700, 1930, 1940, 1950, 2000, 2100, 2130, 2200, 2230, 2300, 2331, 2340, 2345, 2500, 2500-LP, 2510-LP, 2540, 2540LP, 2600, 2800, 2810, 2840, 2841, 2850, 3000, 3000B, 3000J, 3000-LP, 3000M, 3000SS, 3040M, 3050M, 3451, 4000, 4000B, 4000J, 4000M, 4000LP, 4500, 4500LPX, 4600LPX, BC250, BC400, D-17, D-18, G2A, G2C, G4C, GT20, GT21, GT22, GT25, GT31, GT31B, GT35B, GT40B, GT41, SRM3000, SRM3000LP, SRM3000SS, SRM3040M, SRM4000, SRM400LP, SRM4000M | 24-250 | 24-500 |
| **Hitachi** | | |
| CG22EADSLP | 24-250 | |
| CG27EASPSL | 24-250 | 24-500 |

| OEM Model Numbers | 4-1/4" | 5" |
|---|---|---|
| **Hoffco** | | |
| CRITTER, GT14A, GT14B, GT14H, GT21, GT22, GT160B, GT160T, GT160TL, GT210, GT211, GT211A, GT215T, GT225, GT225SPL, GT256SPL, GT320B, GT320HT, GT320T, GT380, GT250HT-A, GT250WT, GT320, GT320HGR320B, GTS-R, GTX, HOFFIE-22, LIL WIZ 600, LIL WIZ 1600, P22, WC-22, WC-215, WT14, WT160, WT160H, WT160HT, WT215, WT250C, WT250HT, WT1600, | 24-250 | |
| JP215, JP215GT, JP220F, JP225, JP260, JP260A, JP260C, JP270, JP300, JP300A, JP300B, JP300C, JP300F, JP320, JP390, JP390A, JP390C, JP390XL, JP420, JP420D, JP660 | 24-250 | 24-500 |
| **Homelite** | | |
| BCH20, BCH24, BCH32C, BCH32CDI, BCH33, BCH33B, BCH33DI, BCH33TO, BCH40, BCH48, FK514, HBC20, HBC24, HBC-30, HB-C30B, HBC32C, HBC33, HBC38, HBC40, HBC48, HK15, HK-18, HK-24 , HK-25, HK28, HK-30 , HK-33 , HK38, NBA524, PBC3600, PBC-3800, PBC-4000, PLT3400, PMB52, PMB522, RK521, ST20, ST40, ST60, ST80, ST80SXD20, ST100, ST120, ST155, ST160, ST175, ST175CG, ST180, ST200, ST210, ST285, ST360, ST385, ST385CG, ST400, ST485, SXD20, SX040, SXD40, TK518, TXD508 | 24-250 | 24-500 |
| EASY REACH, D830CA, D830CB, D830SB, D830SD, ST145, ST155, ST175, ST175G, ST185, ST210, ST285, SX135, PLT3400, UT33600A, UT33650A, VERSA TOOL, Z825SD, Z830SB, Z830SBA | 24-200 | |
| **Honda** | | |
| HHT25SLTAT, HHT35SLTAT, HHT35SUKAT, UMK422LNA, UMK422LTA, UMK431LNA, UMK431TA, UMK431UNBA | 24-250 | 24-500 |
| **Husqvarna** | | |
| 16R, 22R, 24R, 25RL, 24R , 122L, 123L, 223L, 224L, 225L, 225LD, 225R, 225RD, 225RJ, 324L, 324LDX, 324LX, 327LD, 327LDX, 327RJX, 525L, 525LS | 24-250 | |
| 128C, 128DJX, 128L, 128LD, 128LDX, 129DJX, 129L, 129LDX, 227LD, 232L, 232R, 322L, 322R, 323L, 323R, 325LX, 325R, 326LS, 326LX, 326LS, 335LS, 336FR, 345FR, 525LST, 430LS | 24-250 | 24-500 |
| 26LC, 26RLC, 32LC, 32RLC, MONDO, 32L, 32RL, 32R, 32RL, 216CN, 23LC, 26LC, 26RLC, 32LC, 32RLC, MONDO, 128C, 128CD, 129C, 129CD, 952711952 | 24-250 | |
| **Ideal** | | |
| S20, S25, SX230, SX260 | 24-250 | 24-500 |
| **Ikra** | | |
| BT1045 | 24-250 | 24-500 |
| **Iseki** | | |
| DYB201, DYB202, DYB251, DYB252, DYB254, DYB351, DYB354, DYB453 | | |
| **IDC** | | |
| 540, 540-1, 540-2, 540 SUPREME, 580, 580-1, 580-2, 580 SUPREME | 24-250 | 24-500 |
| **John Deere** | | |
| 21C, 80G, 82, 82G, 83G, 85, 100G, 110G, 120G, 200G, 210G, 220G, 250G | 24-250 | |
| 21S, 24S, 25S, 30S, 38B, 38R, 60G, 90G, 220G, 250G, 300G, 350G, 450G, 240G, 250G, 260G, 300G, 305, 350G, 360G, 380G, 385, 450G, 460G, BC1600, S1400, T105S, XT105, XT105SB, XT120, XT140, XT140B, XT140SB, XT170, XT170B, XT250B | 24-250 | 24-500 |
| **Jonsered** | | |
| BIG RED 400, BP40, BP40 COMBI, BP2040, BR400, BR420, BR450, BR460, BR480, BR500, GT21L, GT22L, GT24L, GR26 COMBI, GR26D, GR26L, GR32L, GR32L CAT, GR41, GR44, GR2026CL, GR2026D, GR2032, GR2032D, GR3032L, GR2036, J40D, LR200, LR220, LR220B, LR220L, LR260, LR260B, LR260L, LR300, LR320, LR400, LR420, LR450, LR460, RS38 , RS44, TIGER 40 | 24-250 | 24-500 |
| GT25L, GT26, GT26L | 24-250 | |
| **Kaaz** | | |
| BS400, BX440, BX540, G3CR, G4CR, J40FD, J400G, J400GX, J480, J4BD, JQG4K, JQT200, JLQT200, JQ40, JQ50, K10, K20, K40D, KLQ20, KQ20, KQP20B, KQ30, KQ30B, KQ40, KT10, KT15R, KT17R, KT18R, KT30R, LPQ20B, RQ20, RQ30, RQ30B, RQP20, T30, T50, T170, T240, T240, U10, V15, V20, V15, V18, V25, V35, V40, VP15, VP20, VP200, VPS301, VRP201, VRP301, VRP400, VRS200, VRS201, VS220, VS250, VRS300, VRS301, VRS400, VRX350, VRX351L, VRX360, VRX430, VRX440, VRX540, VS230, VS300, VS400, VSP250, VX221, VX251C, VX260, VX360, VX360S, VX440 | 24-250 | 24-500 |
| **Kawasaki** | | |
| KBL23A, KBL26A | 24-250 | 24-500 |
| **Lawn Boy** | | |
| 1460, 1480, 51606, 51607M, 51608, 51650, 51655, 51660, 51665, 61653, 51908, 51909, 51918, 51919, 1480/CC, 61653, 61953 | 24-250 | |
| **Makita** | | |
| EBC281, EBC310, EM4251, RB251, RBC221, RBC230, RBC251, RBC252, RBC255, RBC260, RBC261, RBC311, RBC321, RBC410, RBK410, RST250, | 24-250 | |
| **Marunaka** | | |
| BC180DX, BC181DX, BC200DX, BC240DX, BC480DX, G3, G5, G8K, G13K, TM21DX, TM21F3L, TM24DX, TM24F3L, T240DX, T240F53L, T240F53 | 24-250 | |
| **Maruyama** | | |
| BC184, BC184C, BC200, BC200C, BC201, BC220DL, BC221DL, BC230, BC241, BC260, BC260C, BC260H, BC2300, BC2600, BCGX22, BCL2250, BCL2250C | 24-250 | |
| 32, 35, BC310, BC320, BC320H, BC326, BC340DL, BC402, BC420H, BC430DWM, BC440DWM, BC500, BC500H, BC3200, BC4200H, BCGX31 | 24-250 | 24-500 |
| BC184C, BC200C, BC201C, BC260C, BC260CB | 24-250 | |

# Gator® SpeedLoad™ Application Chart

| OEM Model Numbers | 4-1/4" | 5" |
|---|---|---|
| **McCulloch** | | |
| 60SX, 65, 65SL, 80A, 80SX, 80SL, , 80SX, 85SL, 2320L, 2035, 2045, 138SJ, 138SL, EB I, EB I-SL, EB I-SX, EB II, EB II-SL, EB II-SX, EB III-SL, EB III-SX, EB280, EB282, EB285, EB285BC, EB287, EB287BC, MAC15RT, MAC60, MAC60A, MAC60S, MAC60SX, MAC65, MAC65SL, MAC70, MAC70A, MAC75, MAC80, MAC100A, MAC 85A, MAC 85S, MAC 85SX, MAC2815, MAC2816, MAC2817, MAC 2818, MAC 2825, MAC 2827, PROMAC I, PROMAC I-SX, PROMAC II, PROMAC II SUP, PROMAC IV HD, ROADRUNNER, ROADRUNNER II, ROADRUNNER III, ROADRUNNER SL, SEB I-SX SPECIAL, SEB II-S, SEB III-S, SILVER EAGLE 28, SILVER EAGLE 28C, SILVER EAGLE 32BC, TITAN2000, TITAN2010, TITAN2100, TITAN2200 | 24-200 | |
| 28S, 32HD, 32HDS, 85A, 85S, 85SL, 85SX, EB3SX, EB4, EB32BCS, EB35L, EB280, EB282, EB285BCS, EB297BCS, EB325BC, EB327BC, EB2815, EB2816, EB2817, EB2818, EB2845, EB3225, EB3225HD, EB3227, EB3227HD, EB III, EB IV, EB IV SL, MAC22, MAC23, MAC30A, MAC 32, MAC37, MAC38AV, MAC57, MAC85A, MAC90, MAC90A, MAC95, MAC95A, MAC99A, MAC99-SL, MAC100A, MAC100AHD, MAC100HD, MAC3225, MAC3227, MA3225HD, MAC3227HD, PROMACIII, PROMACIII SUP, PROMACIV SUP, PROMACIV HD, PROMAC2335J, PROMAC2635B, PROMAC2635J, PROMAC3335L, PROSCAPER I-S, PROSCAPER II, PROSCAPER IIHD, PROSCAPER III, PROSCAPER IV, PROSCAPER V, SILVER EAGLE 32 BCS, SILVER EAGLE 32 BC DLX, TD2400, TD3300, TD4000, TITAN2130, TITAN2310, TITAN2360, TITAN2400, TITAN2500, TITAN2500AV, TITAN2560, TITAN2560AV, TITAN2565, TITAN2300, TITAN2300AV, TITAN3000, TITAN3900, TITAN4335B | 24-250 | |
| **Mitsubishi** | | |
| K20M-T12, MB6A, MB160A, MB180, MB200, MV130 | 24-250 | |
| **Murray** | | |
| 41BDZ01C758, 41CDZ03C758 | 24-200 | |
| 41BDZ20C768, 41BDZ22C768 | 24-250 | |
| **Nikkari** | | |
| 22, 24, 33, 37, FSK514, NBA524, PNB522, RK521, SDX20, SXD40, TDK518, TX(B)508 | 24-250 | |
| **Olympyk** | | |
| 200, 220, 260, 300, 310, 400, 410, 433, 433BP, 440, 440BP, 727, 727D, 727C, 727S, 727T, 733, 733S, 733T, 740, 740S, 740T, 750, 750S, 750T B200, B220, B260L, B220L, B220S, B260, B300, B320, B400, B420, B450, B460, OL8740BAV, OL8742BAV, OL-8750PRO, OL8753BAV, OL88510BAV, OL8735LAV, OL8260BAV, OL8260DAV, OL8260LAV, OL8260TA, OL8350BAV, OL8350LAV, OL8450BP, OL8460BAV, OL8725BAV, OL8725LAV, OL8726TA, OL8735BAV, PRO-38, | 24-250 | |
| **Paice Setter** | | |
| K20, KQ, KLQ, KQ30, JQ, J40D, | 24-250 | |
| **Paramount** | | |
| PLT2651, PLT2857, PT140, PT140-2, PT145, PT160, PT162, PT162-01, PT1400, PT1400-00, SK140-02, SK145, SK160-02, SK165 | 24-250 | |
| **Pioneer/Partner** | | |
| F15, F16, S16, S24, SF24, B25SCC, S33, S41, S51, B180, B250, Spartan, T250, S33, S41, S51, B400, 200, 205, B250C, B250V, T250(EURO) | 24-250 | |
| **Poulan Pro/Poulan** | | |
| 770, PPC22, PPC25, PPC25E, PPC32; PRO111, PRO112, PRO113, PRO114, PRO115, PRO117, PRO559, PRO609, PRO900, PRO1350, PRO1500, PRO2400, PRO2500, PRO2600, PRO2610, PRO2620, PRO2615, PRO 2700, YARD PRO115, YARD PRO120A, YARD PRO130A, YARD PRO145, YARD PRO160, YARD PRO200 | 24-250 | |
| **Red Max** | | |
| BC220DL, BC221DL, BC300DL, BC2300DL, BK235FL, BC17, BC23, BC240DL, BC260DL, BC262DL, BC261DL, BC2600DL, BK 245FLK, BC 254A, BCD20, BCF01G2KC, BCX2600DS, BCZ 2500S/2500SU/2500SW/2500BC, BC2000DL, BC200BT2000, BT2001DL, FBC22, FBC26 | 24-250 | |
| BC300DL, BK345FL, BK435FL, BK530DL, BC32, BC340DL, BC341DL, BC342DL, BC430DWM, BC440DWM, BK 346FL, BK 436FL, BC 340DWM, BC 340FW, BC 431DWM, BCF01G2KC, BC 3400DW/4400DW, BC430, BC440, BC441DWM, BC442, BC531, BC431FWM, BC531DWM | 24-250 | 24-500 |
| **Remington** | | |
| RM2510, RM2520, RM2570, 41AD160G983, RUSTLER (straight and curved-shaft) WRANGLER (straight and curved-shaft) | 24-200 | |
| **Robin** | | |
| NB02, NB02T, NB02-3A, NB02TM, NB03, NB03M, NB16, NB16F, NB16S, NB16T, NB20T, NBT20T, NB23, NB23S, NB23F, NB26, MB26AV, NB27, NB27AU, NB30K, NB31, NB31AU, MB31AV, NB211, NB211S, NB223, NB231, NB253, NB281, NB281AU, NBF171, NBF231, NBF251, NB351Z, NBF16F, NBF171, NBF251, NBR30K, NBR40, NBT211, NBT231, NBT415, | 24-250 | |
| **Ryobi/Ryan/IDC** | | |
| 120, 130, 260, 261, 262, 263, 264, 264-1, 264-2, 264-3, 265, 265-1, 265-P, 274, 274-2, 274-3, 275, 275-1, 275-P, 270, 280, 364, 364-1, 365, 500, 520, 520-1, 520-2, 700, 700R, 720R, 760R, 764R, 770R, 960R | 24-200 | |
| 108KS, 284, 284-1, 284-2, 284-3, 285, 285-1, 285-P, 540, 540-1, 540-2, 580, 580-1, 580-2, 740R, 740R-1, 750R, 775R, 780R, 780R-1, 780RB, 780RE, 7890R, 865R, 885R, 990R, 840R, 3318, RD430, RD520, RD1605, RD180K, RD2414, RD3318, RD3330, RD3818, RD5224, RD5225, REK285BP, RSB2801, RSH1100, | 24-250 | |
| **Sabo** | | |
| 23-700, 26-1500, 26-1700 | 24-250 | |
| **Sabre** | | |
| B25, S25, S25C | 24-250 | |
| **Sears** | | |
| PRO SERIES, 21851-2816, 636-79545, 636-7955, 636-79558, 636-796233, 7957, 7958, 7959, 7968, 7969, 74110, 74121, 74125, 79011, 79500, 79501, 79504, 79534, 79541, 79542, 79551, 79552, 79555, 79556, 79561, 79565, 79611, 79612, 79612, 79613, 79614, 79615, 79619, 79621, 79717, 79719, 79812, 79813, 79814, 79819, 79532, 79853, 79854, 79855, 79857, 796234M, 796242, 796243, 989658LS, 979551C | 24-250 | |

T

# Gator® SpeedLoad™ Application Chart

| OEM Model Numbers | 4-1/4" | 5" |
|---|---|---|
| **Sears** | | |
| 74212, 74213, 79531, 79606, 79711, 79712, 79713, 79714, 79715, 79716, 79718, 79721, 79725, 79726, 79727, 79816, 79821, 79823, 742110, 742111, 797100, | 24-250 | |
| **Servistar** | | |
| 385SSR, 395SSR | 24-250 | |
| **Shindaiwa** | | |
| C-20, C-23, C-25, C-230, C-242, C-250, C-254, T-20, T-20A, T-23E, T-25, T-195, T-220, T-222, T-230, T-230S, T-230XR, T-235, T-254, T-242, T-242X, T-2510X, T-250, T-260, T-261, T-261B, T-261XB, T-261XR, YARDWARE 220 | 24-250 | |
| B-35, B-40, B-45, B-450, BP-35, BP-45, C-27, C-35, C-282, C-344, T-27, T35, T-270, T-272, T-272X, T-282, T-282X, T-300, T-344X, T-3410, T-3410X, T-350, | 24-250 | 24-500 |
| F-18, F-20, F-21, F-22, F-230, F195 | 24-250 | |
| **Shingu** | | |
| 650, 200, 250, 350, S20, G1823E, G1823DE, G2523E, G2523DE, P750, P850, PK2325E, PK2326DE, PG3330DD, PK4035DD, PK4036DD, PK4845DD, PK4846DD, S22PNC, S23PNC | 24-250 | |
| **Shingushoko** | | |
| 200, 250, 350, 600, 650, 700, K301, P750, P850 | 24-250 | |
| **Snapper** | | |
| 212, 212CST, 213, 213CST, 214, 214 DCST, P212CST, P212LST, S28CD | 24-250 | |
| 210SS, 211SS, 211SST, 212CST, 214DCST, 215ORI, 215SST, 240SS, 240SST, 245SST, 245ORT, 310, 311, 311S, 410, 410SST 411SST, 414 SST, 415ORT, 2101SST, PL212LST, SSTBC, SST2111, SST2401, SST7111 | 24-250 | |
| **Solo** | | |
| 014, 100, 119, 115, 118, 123, 125, 154, 400, 130S, S100, S400, FS136, FS135, MULTIMOT, | 24-250 | |
| **Stihl** | | |
| FS44, FS44B, FS44J, FSS44R, FS50E, FS50F, FS51, FS51AVE, FS52, FS52AVE, FS55, FS55R, FS55RC-E, FS56, FS56AVRE, FS56C-E, FS56RC-E, FS60, FS61, FS61AE, FS61E, FS62, FS62AVE, FS62AVRE, FS65, FS65AVE, FS65AVRE, FS66, FS66AVE, FS66AVRE, FS70R, FS74, FS74AVE, FS74AVRE, FS76, FS76AVE, FS76AVRE, FS80E, FS80RE, FS81, FS81AVE, FS81AVRE, FS83, FS83R, FS83RT, FS85R, FS85R, FS85RT, FS86, FS86AVE, FS86AVRE, FS88, FS90, FS90AVE, FS90R, FS91, FS94R, FS96, FS100, FS106, FS106AVE, FS108, FS110, FS110R, FS120, FS120R, FS130, FS130R, FS200, FS200R, FS240, FS240R, FS250, FS250R, FS310, FS350, FS360C-E, FS400, FS450K, FS460C-EM, FS550, FS550K, FS560C-EM | 24-250 | 24-500 |
| FS38, FS40 (2001 & newer), FS40C-E, FS45, FS46, FS50C-E, FSE60 | 24-200 | |
| **TAS** | | |
| HD180, Parlander, SUM301, SUM7000, TB16, TB160, TBC23, TBC23F, TBC30, TBC202, TBC205, TBC215, TBC232, TBC262, TBC265, TBC30, TBC301, TBC322, TBC355, TBC373, TBC422, TBC501, QUM2, SUM3 | 24-250 | 24-500 |
| **TMC** | | |
| 1800, 2400, 3300, 3350 | 24-250 | 24-500 |
| **TML** | | |
| 2856 | 24-250 | 24-500 |
| **Tanaka** | | |
| 218, 220E, 233, 2000, 265SDH, SUM250, SUM500/351, SUM421, SUM301, SUM7000, SUM400, TBC-162, TBC-205, TBC-215, TBC218, TBC-220, TBC-220SS, TBC-232, TBC233, TBC-240, TBC-250, TBC-255PF, TBC-262, TBC-265, TBC-2100, TBC-2110, TBC-2211, TBC-2510, TST-218, TST-501, TBC265SDH, TBC2000, TBC2200, TBC200ON, TBC2110, TBC-160, TBC-202, TBC-210, TC-1600, TST218, TBC160, TBC162, TBC202, TBC205, TBC210, TC1600, TBC215, TCG-24EASPSL, TCG-24EBSP | 24-250 | |
| 301, 321, 300SDH, 355SDH, 422SDH, 500SDH, TBC-270PF, TCB-280PF, TBC-300, TBC301, TBC321 TBC-322, TBC-325, TCB-340PF, TBC-355, TBC-373, TBC-400, TBC-420PF, TBC-422, TBC-422C, TBC-425, TBC-500, TBC-501, TBC-2800, TBC-3010, TBC-4500, TBC-4501, TBC4000, TGC-27EASPL, TST-501 | 24-250 | 24-500 |
| TBC2100, TBC200, TCG22EABSLP | 24-250 | |
| **Tondu** | | |
| 260, 350, S100, S250, PRO850, PRO255, PRO851 | 24-250 | |
| **Toro** | | |
| 1000, 2000, 30900, 30901, 30920, 51628, 51641, 51645, 51650, 51660, 51918, CL700, CL2100, CL30900, CL30901, CL30920, TC300, TC350, TC400, TC600, TC650, TC700, TC800, TC1000, TC2000, TC2100, TC3000, TC3100, TC3500, TC4000, TC5000 | 24-250 | |
| 51957, 51958, 51978, 51998TC1000, TC2000 | 24-250 | |
| **Troy-Bilt** | | |
| TB42BC, TB590EC, TB685EC, TB2040XP, TB2044XP, TB6042XP, TB6044XP | 24-250 | |
| TB21EC, TB22EC, TB32EC, TB80EC, TB525EC, TB575EC, TB625EC, TB635EC | 24-200 | |
| **Weedeater** | | |
| AYP140, 22(EUROPE), 599, 609, 1000, GTI19, GTI19T, XR90, XR95, XR100, XR105, XR125, XR200, YP130, YP140, YP160, YP200, PRO37, PRO100, PRO105, PRO150, PRO195, PRO200 | 24-250 | 24-500 |
| 115, 117, GTI15, GTI15-T, GTI16, GTI17C, GTI17T, GTI18, GTI18KT, GTI18T, GTI19, GTI52, GTI SUPER 16, PRO111, PRO112, PRO114, PRO115, PRO117 , PRO175, PRO-LITE, PRO-LITE PLUS, ULTRA TRIM, WEEDY 2215, XR20, XR20T, XR30, XR50, XR50A, XR50S, XR70, XR75, XR80, XR80A, XR85, XR125, XT20, XT35, XT50T, XT80, XT85, XT100, XT125, XT125B, XT165, XT175, XT185, XT195, XT500, XT507, XT559, XT587, XT599, XT600, XT607, XT608, XT609, XT1400, XT1400T, XT1500, XT1600, XT1600T, XT1700, XT1700A, XT1740, XT3500, YP110, YP115, YP116, YP120, YP120A, YP130, YP130A, YP145, | 24-250 | |

# Gator® SpeedLoad™ Application Chart

| OEM Model Numbers | 4-1/4" | 5" |
|---|---|---|
| **Westmac** | | |
| 16, 19S, 23, 31, 33S, 35, 40, 50, 68 | 24-250 | |
| **Windmill** | | |
| AM SERIES, B40, C35, X3335G, | 24-250 | |
| **Vandermolen** | | |
| L1840F, L1840G, L1845E, L1845G, L2035G, L2415E, L2415G, L3335G, X184SE, X185SE, X1845G, X2415E, X2415G, X3335E, X3335G | 24-250 | |
| **Xenoa** | | |
| FBC33 | 24-250 | |
| **Yamaha** | | |
| YBC20D, YBC30D, YBC40D, YBC50D | 24-250 | |
| **Yazoo** | | |
| TBC31, YBC16, YBC23, YBC31 | 24-250 | |

## BioTrim™ Trimmer Line

- Oxo-biodegradable material offers quick decomposition compared to standard Oregon® trimmer lines
- Performs similar to Oregon Gatorline® products with comparable applications
- Recyclable material used for packaging components

| OREGON | Package Type | Footage | Product Code |
|---|---|---|---|
| **.080" Gauge** | | | |
| 559046 | 50' Donut | 50' (15 m) | |
| 559050 | 1 lb. Donut | 413' (126 m) | |
| **.095" Gauge** | | | |
| 559047 | 50' Donut | 50' (15 m) | |
| 559051 | 1 lb. Donut | 285' (87 m ) | |

**Oxo -Biodegradability* is a three-fold process:**

1. Photo-oxidation: The line is fragmented by UV light from the sun over a period of 3 years.
2. Thermo-oxidation: Heat continues the fragmentation on the soil.
3. Bio-assimilation: Finally, micro-organisms in the earth consume the remaining elements. The whole process takes between 5 and 10 years (depending on climatic conditions), after which no trace of the line remains. The line will oxo-biodegrade only when in contact with the soil. It remains completely intact and in perfect condition when stored.

**Degradability Scale:**

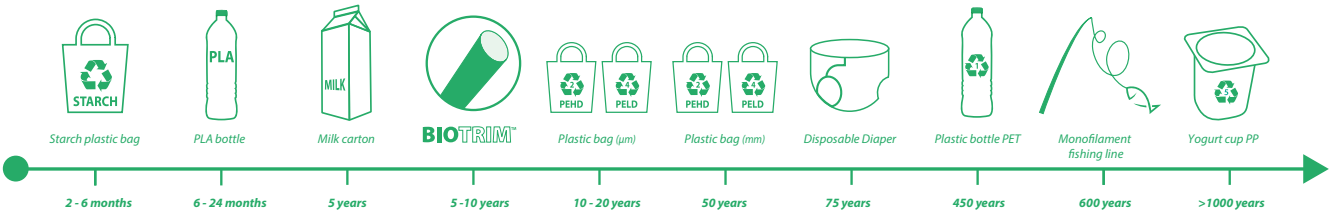


* OXO-Biodegradability certified by "Le Centre National d'Evaluation de Photo protection" C.N.E.P. – University Blaise Pascal, Clermont-Ferrand, FRANCE. Test protocol C.N.E.P. – SEESIB compliant with BS 8472:2011

T

## Platinum Gatorline™

**Platinum Gatorline** solves many of the problems that aggravate users of traditional trimmer line. An armored exterior – more resistant to breakage than standard line – shields a highly flexible co-polymer core, providing outstanding durability. Platinum Gatorline is also engineered to resist welding up to 498° F (259° C) – much higher than standard line.

Features
- Consistent line diameter
- Armored exterior
- Flexible core
- SuperTwist®

Benefits
- Compatible with most trimmer head systems
- High resistance to abrasion, breakage and welding
- Resistant to cracking and breaking
- Less resistance, engine drag, vibration and noise compared with traditional, round nylon lines

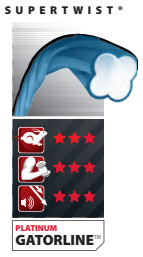

| OREGON | Package Type | Footage | Product Code |
|---|---|---|---|
| **.080" Gauge** | | | |
| 20-117 | 1/2 lb. Donut | 207' | |
| 20-118 | 1 lb. Donut | 414' | |
| 20-119 | 3 lb. Spool | 1244' | |
| **.095" Gauge** | | | |
| 20-104 | 1/2 lb. Donut | 145' | |
| 20-100 | 1 lb. Donut | 289' | |
| 20-109 | 1 lb. Spool | 289' | |
| 20-102 | 3 lb. Spool | 866' | |
| 20-113 | 5 lb. Spool | 1440' | |
| **.105" Gauge** | | | |
| 20-106 | 1/2 lb. Donut | 118' | |
| 20-101 | 1 lb. Donut | 236' | |
| 20-110 | 1 lb. Spool | 236' | |
| 20-103 | 3 lb. Spool | 709' | |
| 20-114 | 5 lb. Spool | 1181' | |

| OREGON | Package Type | Footage | Product Code |
|---|---|---|---|
| **.118" Gauge** | | | |
| 20-123 | 1 lb. Donut | 185' | |
| 20-125 | 3 lb. Spool | 554' | |
| 20-124 | 5 lb. Spool | 923' | |
| **.130" Gauge** | | | |
| 20-107 | 1 lb. Donut | 151' | |
| 20-111 | 1 lb. Spool | 151' | |
| 20-112 | 3 lb. Spool | 456' | |
| 20-115 | 5 lb. Spool | 761' | |
| **.155" Gauge** | | | |
| 20-108 | 1 lb. Donut | 100' | |
| 20-116 | 5 lb. Spool | 500' | |

## SuperTwist Magnum Gatorline™

**SuperTwist Magnum Gatorline** offers all of the features of Magnum Gatorline but with a twist! SuperTwist incorporates the high strength inner core and weld resistant outer layer with new twisted shape that not only reduces noise but improves cutting efficiency.

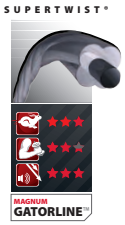

| OREGON | Package Type | Footage | Product Code |
|---|---|---|---|
| **.095" Gauge** | | | |
| 69-200 | 50' Donut | 50' | |
| 20-020 | 1 lb. Donut | 280' | |
| 20-026 | 3 lb. Spool | 867' | |
| 20-023 | 5 lb. Spool | 1430' | |
| **.105" Gauge** | | | |
| 69-046 | 50' Donut | 50' | |
| 20-034 | 1 lb. Donut | 289' | |
| 20-035 | 3 lb. Spool | 709' | |
| 20-036 | 5 lb. Spool | 1181' | |
| **.118" Gauge** | | | |
| 69-201 | 50' Donut | 50' | |
| 20-021 | 1 lb. Donut | 180' | |
| 20-027 | 3 lb. Spool | 555' | |
| 20-024 | 5 lb. Spool | 915' | |
| **.130" Gauge** | | | |
| 69-202 | 32' Donut | 32' | |
| 20-022 | 1 lb. Donut | 150' | |
| 20-028 | 3 lb. Spool | 459' | |
| 20-025 | 5 lb. Spool | 750' | |

T

# Trimmer Line & Heads

## Magnum Gatorline™

Heavy-duty, professional, dual polymer trimmer line from Oregon®

- Outer layer prevents welding
- User friendly donut - fewer tangles
- High-strength inner core resists breaking
- Long life, excellent strength

### Square

| OREGON | Package Type | Footage | Product Code |
|---|---|---|---|
| **.080" Gauge** | | | |
| 22-980 | 1/2 lb. Donut | 163' | |
| 22-480 | 1 lb. Donut | 327' | |
| 22-880 | 3 lb. Spool | 980' | |
| 22-080 | 5 lb. Spool | 1633' | |
| **.095" Gauge** | | | |
| 69-190 | 50' Donut | 50' | |
| 22-995 | 1/2 lb. Donut | 113' | |
| 22-495 | 1 lb. Donut | 227' | |
| 22-895 | 3 lb. Spool | 681' | |
| 22-095 | 5 lb. Spool | 1134' | |
| **.105" Gauge** | | | |
| 69-191 | 50' Donut | 50' | |
| 22-905 | 1/2 lb. Donut | 90' | |
| 22-405 | 1 lb. Donut | 179' | |
| 22-805 | 3 lb. Spool | 564' | |
| 22-005 | 5 lb. Spool | 896' | |
| **.130" Gauge** | | | |
| 69-194 | 50' Donut | 50' | |
| 22-930 | 1/2 lb. Donut | 60' | |
| 22-430 | 1 lb. Donut | 120' | |
| 22-830 | 3 lb. Spool | 360' | |
| 22-030 | 5 lb. Spool | 600' | |
| **.155" Gauge** | | | |
| 22-955 | 1/2 lb. Donut | 42' | |
| 22-455 | 1 lb. Donut | 84' | |
| 22-855 | 3 lb. Spool | 251' | |
| 22-055 | 5 lb. Spool | 419' | |
| **.170" Gauge** | | | |
| 22-970 | 1/2 lb. Donut | 36' | |
| 22-470 | 1 lb. Donut | 72' | |
| 22-870 | 3 lb. Spool | 213' | |
| 22-070 | 5 lb. Spool | 354' | |

### Round

| OREGON | Package Type | Footage | Product Code |
|---|---|---|---|
| **.080" Gauge** | | | |
| 22-280 | 1/2 lb. Donut | 208' | |
| 22-380 | 1 lb. Donut | 416' | |
| 22-180 | 3 lb. Spool | 1248' | |
| 22-580 | 5 lb. Spool | 2081' | |
| **.095" Gauge** | | | |
| 69-195 | 50' Donut | 50' | |
| 22-295 | 1/2 lb. Donut | 144' | |
| 22-395 | 1 lb. Donut | 289' | |
| 22-195 | 3 lb. Spool | 867' | |
| 22-595 | 5 lb. Spool | 1445' | |
| **.105" Gauge** | | | |
| 69-196 | 50' Donut | 50' | |
| 22-205 | 1/2 lb. Donut | 114' | |
| 22-305 | 1 lb. Donut | 228' | |
| 22-105 | 3 lb. Spool | 685' | |
| 22-505 | 5 lb. Spool | 1142' | |
| **.130" Gauge** | | | |
| 69-197 | 50' Donut | 50' | |
| 22-230 | 1/2 lb. Donut | 76' | |
| 22-330 | 1 lb. Donut | 153' | |
| 22-130 | 3 lb. Spool | 459' | |
| 22-530 | 5 lb. Spool | 764' | |
| **.155" Gauge** | | | |
| 22-255 | 1/2 lb. Donut | 53' | |
| 22-355 | 1 lb. Donut | 107' | |
| 22-155 | 3 lb. Spool | 320' | |
| 22-555 | 5 lb. Spool | 533' | |
| **.170" Gauge** | | | |
| 22-270 | 1/2 lb. Donut | 46' | |
| 22-370 | 1 lb. Donut | 92' | |
| 22-170 | 3 lb. Spool | 269' | |
| 22-570 | 5 lb. Spool | 449' | |

## Gatorline™

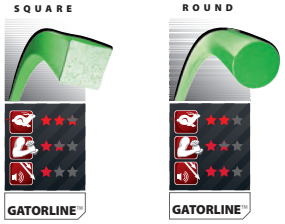

- Fits all standard trimmer heads
- Long-lasting premium co-polymer
- Green color
- User-friendly donut limits tangles

### Square

| OREGON | Package Type | Footage | Product Code |
|---|---|---|---|
| **.065" Gauge** | | | |
| 69-170 | 50' Donut | 50' | |
| **.080" Gauge** | | | |
| 69-171 | 50' Donut | 50' | |
| 21-980 | 1/2 lb. Donut | 163' | |
| 21-480 | 1 lb. Donut | 327' | |
| 21-880 | 3 lb. Spool | 980' | |
| 21-080 | 5 lb. Spool | 1633' | |
| **.095" Gauge** | | | |
| 69-172 | 50' Donut | 50' | |
| 21-995 | 1/2 lb. Donut | 113' | |
| 21-495 | 1 lb. Donut | 227' | |
| 21-895 | 3 lb. Spool | 681' | |
| 21-095 | 5 lb. Spool | 1134' | |
| **.105" Gauge** | | | |
| 21-905 | 1/2 lb. Donut | 90' | |
| 21-405 | 1 lb. Donut | 179' | |
| 21-805 | 3 lb. Spool | 564' | |
| 21-005 | 5 lb. Spool | 896' | |
| **.118" Gauge** | | | |
| 21-234 | 1 lb. Donut | 145' | |
| 21-235 | 3 lb. Spool | 435' | |
| 21-236 | 5 lb. Spool | 725' | |
| **.130" Gauge** | | | |
| 21-930 | 1/2 lb. Donut | 60' | |
| 21-430 | 1 lb. Donut | 120' | |
| 21-830 | 3 lb. Spool | 360' | |
| 21-030 | 5 lb. Spool | 600' | |
| **.155" Gauge** | | | |
| 21-955 | 1/2 lb. Donut | 42' | |
| 21-455 | 1 lb. Donut | 84' | |
| 21-855 | 3 lb. Spool | 251' | |
| 21-055 | 5 lb. Spool | 419' | |
| **.170" Gauge** | | | |
| 21-470 | 1 lb. Donut | 72' | |

### Round

| OREGON | Package Type | Footage | Product Code |
|---|---|---|---|
| **.065" Gauge** | | | |
| 69-173 | 50' Donut | 50' | |
| 21-265 | 1/2 lb. Donut | 306' | |
| 21-365 | 1 lb. Donut | 611' | |
| **.080" Gauge** | | | |
| 69-174 | 50' Donut | 50' | |
| 21-280 | 1/2 lb. Donut | 208' | |
| 21-380 | 1 lb. Donut | 416' | |
| 21-180 | 3 lb. Spool | 1248' | |
| 21-580 | 5 lb. Spool | 2081' | |
| **.095" Gauge** | | | |
| 69-175 | 50' Donut | 50' | |
| 21-295 | 1/2 lb. Donut | 144' | |
| 21-395 | 1 lb. Donut | 289' | |
| 21-195 | 3 lb. Spool | 867' | |
| 21-595 | 5 lb. Spool | 1445' | |
| **.118" Gauge** | | | |
| 21-231 | 1 lb. Donut | 185' | |
| 21-232 | 3 lb. Spool | 554' | |
| 21-233 | 5 lb. Spool | 923' | |
| **.105" Gauge** | | | |
| 69-176 | 50' Donut | 50' | |
| 21-205 | 1/2 lb. Donut | 114' | |
| 21-305 | 1 lb. Donut | 228' | |
| 21-105 | 3 lb. Spool | 685' | |
| 21-505 | 5 lb. Spool | 1142' | |
| **.130" Gauge** | | | |
| 69-177 | 50' Donut | 50' | |
| 21-230 | 1/2 lb. Donut | 76' | |
| 21-330 | 1 lb. Donut | 153' | |
| 21-131 | 3 lb. Spool | 459' | |
| 21-530 | 5 lb. Spool | 764' | |
| **.155" Gauge** | | | |
| 21-255 | 1/2 lb. Donut | 53' | |
| 21-355 | 1 lb. Donut | 107' | |
| 21-155 | 3 lb. Spool | 320' | |
| 21-555 | 5 lb. Spool | 533' | |
| **.170" Gauge** | | | |
| 21-370 | 1 lb. Donut | 92' | |
| 21-170 | 3 lb. Spool | 272' | |

**Important Trimmer Line Information**

Any monofilament trimmer line can lose moisture over time or become brittle, especially if subjected to heat and sunlight. To reduce brittleness, Oregon® strongly recommends that line be submerged in water for 24 hours.

T

# Trimmer Line & Heads

## Oregon® Trimmer Line, Green

- Fits all standard trimmer heads
- Long-lasting premium co-polymer
- Green color
- User-friendly donut limits tangles

| OREGON | Package Type | Footage | Product Code |
|---|---|---|---|
| **Square .095" Gauge** | | | |
| 69-001 – NEW | 15M Clamshell | 50' | |
| 69-004 – NEW | 1/2 lb. Clamshell | 120' | |
| 69-414 | 1 lb. Donut | 246' | |
| 69-415 | 3 lb. Spool | 738' | |
| 69-416 | 5 lb. Spool | 1230' | |
| **Square .105" Gauge** | | | |
| 69-005 – NEW | 1/4 lb. Clamshell | 50' | |
| 69-008 – NEW | 1/2 lb. Clamshell | 90' | |
| 69-472 | 1 lb. Donut | 193' | |
| 69-473 | 3 lb. Spool | 584' | |
| 69-474 | 5 lb. Spool | 971' | |

| OREGON | Package Type | Footage | Product Code |
|---|---|---|---|
| **Round .095" Gauge** | | | |
| 69-012 – NEW | 15M Clamshell | 50' | |
| 69-010 – NEW | 1/2 lb. Clamshell | 140' | |
| 69-364 | 1 lb. Donut | 288' | |
| 69-365 | 3 lb. Spool | 866' | |
| 69-366 | 5 lb. Spool | 1446' | |
| **Round .105" Gauge** | | | |
| 69-013 – NEW | 15M Clamshell | 50' | |
| 69-014 – NEW | 1/2 lb. Clamshell | 120' | |
| 69-382 | 1 lb. Donut | 229' | |
| 69-383 | 3 lb. Spool | 685' | |
| 69-384 | 5 lb. Spool | 1142' | |

## Oregon® Trimmer Line, Red

- Fits all standard trimmer heads
- Long-lasting premium co-polymer
- Red color
- User-friendly donut limits tangles

| OREGON | Package Type | Footage | Product Code |
|---|---|---|---|
| **Square .095" Gauge** | | | |
| 69-592 – NEW | 15M Clamshell | 50' | |
| 69-593 – NEW | 1/2 lb. Clamshell | 120' | |
| 69-604 | 1 lb. Donut | 246' | |
| 69-605 | 3 lb. Spool | 738' | |
| 69-606 | 5 lb. Spool | 1230' | |
| **Square .105" Gauge** | | | |
| 69-594 – NEW | 15M Clamshell | 50' | |
| 69-595 – NEW | 1/2 lb. Clamshell | 90' | |
| 69-607 | 1 lb. Donut | 193' | |
| 69-608 | 3 lb. Spool | 584' | |
| 69-609 | 5 lb. Spool | 971' | |

| OREGON | Package Type | Footage | Product Code |
|---|---|---|---|
| **Round .095" Gauge** | | | |
| 69-596 – NEW | 15M Clamshell | 50' | |
| 69-597 – NEW | 1/2 lb. Clamshell | 140' | |
| 69-610 | 1 lb. Donut | 288' | |
| 69-611 | 3 lb. Spool | 866' | |
| 69-600 | 5 lb. Spool | 1446' | |
| **Round .105" Gauge** | | | |
| 69-598 – NEW | 15M Clamshell | 50' | |
| 69-599 – NEW | 1/2 lb. Clamshell | 120' | |
| 69-601 | 1 lb. Donut | 229' | |
| 69-602 | 3 lb. Spool | 685' | |
| 69-603 | 5 lb. Spool | 1142' | |

T

## Gatorline™ Pre-cut Lengths

- Commercial grade line with square edges
- Long-lasting premium co-polymer material
- Green color

| OREGON | Length | Package Type | Fit-up | Quantity | Product Code |
|---|---|---|---|---|---|
| **Square – .095" Gauge** | | | | | |
| 19-031 | 8" | Cut lengths in a bag | Kwik Loader® trimmer heads | 3 lbs. | |
| 19-041 | 8" | Cut lengths in a tube | Kwik Loader trimmer heads | 50 pcs. | |
| 19-006 | 16-1/4" | Cut lengths in a tube | Fixed line trimmer heads | 90 pcs. | |
| **Square – .105" Gauge** | | | | | |
| 19-032 | 8" | Cut lengths in a bag | Kwik Loader trimmer heads | 3 lbs. | |
| 19-042 | 8" | Cut lengths in a tube | Kwik Loader trimmer heads | 50 pcs. | |
| **Square – .130" Gauge** | | | | | |
| 19-033 | 8" | Cut lengths in a bag | Kwik Loader trimmer heads | 3 lbs. | |
| 19-043 | 8" | Cut lengths in a tube | Kwik Loader trimmer heads | 40 pcs. | |
| 19-004 | 16-1/4" | Cut lengths in a tube | Fixed line trimmer heads | 36 pcs. | |
| 19-002 | 18" | Cut lengths in a tube | Troy-Bilt high wheel trimmers | 36 pcs. | |
| 19-001 | 21" | Cut lengths in a tube | DR & other high wheel trimmers | 36 pcs. | |
| **Square – .155" Gauge** | | | | | |
| 19-034 | 8" | Cut lengths in a bag | Kwik Loader trimmer heads | 3 lbs. | |
| 19-044 | 8" | Cut lengths in a tube | Kwik Loader trimmer heads | 25 pcs. | |
| 19-007 | 16-1/4" | Cut lengths in a tube | Fixed line trimmer heads | 24 pcs. | |
| 19-005 | 18" | Cut lengths in a tube | Troy-Bilt high wheel trimmers | 24 pcs. | |
| 19-003 | 21" | Cut lengths in a tube | DR & other high wheel trimmers | 24 pcs. | |

## Red Gatorline™

- Fits all standard trimmer heads
- Long-lasting premium co-polymer
- User-friendly donut limits tangles

### Round

| OREGON | Package Type | Footage | Product Code |
|---|---|---|---|
| **.080" Gauge** | | | |
| 23-380 | 1 lb. Donut | 416' | |
| 23-780 | 1 lb. Spool | 416' | |
| 23-180 | 3 lb. Spool | 1248' | |
| 23-580 | 5 lb. Spool | 2081' | |
| **.095" Gauge** | | | |
| 23-395 | 1 lb. Donut | 289' | |
| 23-795 | 1 lb. Spool | 289' | |
| 23-195 | 3 lb. Spool | 867' | |
| 23-595 | 5 lb. Spool | 1445' | |
| **.105" Gauge** | | | |
| 23-705 | 1 lb. Spool | | |
| **.130" Gauge** | | | |
| 23-331 | 1 lb. Donut | 153' | |
| 23-131 | 3 lb. Spool | 459' | |
| 23-530 | 5 lb. Spool | 764' | |

T

# Trimmer Line & Heads

## FlexiBlade™ Trimmer Line

**FlexiBlade** is a revolution in trimmer technology, a patented cutting system with the power to sever weed stalks up to 3/4" in diameter with ease. The extreme cutting force of FlexiBlade for cutting weeds and heavy grass comes from its serrated edges. The serrations act like the teeth of a saw, bringing multiple cutting surfaces into contact with the vegetation being cut. FlexiBlade is made from a proven high-strength reinforced composite material for long-wearing durability.

- Leaves a cleaner cut in grass
- Cuts through dense weeds and berry vines
- Cuts fast, even in heavy cutting conditions
- More cutting power than trimmer line
- Quieter than trimmer line
- Safer than steel weed blades

**NOTE**: FlexiBlade is designed to cut weeds, vines and grass. Avoid contact with concrete, rocks and wood. The sharp teeth can damage trees, walls, and fences. The .099" and .105" diameters can be used in most manual-feed trimmer heads. FlexiBlade is not recommended for most "bump feed" trimmers.

### Donuts & Spools

| Gauge | OREGON | Package Type | Footage | Product Code |
|---|---|---|---|---|
| .099" | 21-600 | Donut | 175' | |
| | 21-605 | Large Spool | 920' | |
| .105" | 21-601 | Donut | 156' | |
| | 21-606 | Large Spool | 819' | |
| .118" | 21-602 | Donut | 121' | |
| | 21-607 | Large Spool | 639' | |
| .138" | 21-603 | Donut | 89' | |
| | 21-608 | Large Spool | 470' | |
| .158" | 21-604 | Donut | 68' | |
| | 21-609 | Large Spool | 360' | |

### Pre-Cut Trimmer Line

| Gauge | OREGON | Pieces Per Tube | Length | Product Code |
|---|---|---|---|---|
| .099" | 19-025 | 50 | 8" | |
| .105" | 19-026 | 45 | 8" | |
| | 19-016 | 45 | 10" | |
| .118" | 19-027 | 35 | 8" | |
| | 19-017 | 35 | 10" | |
| .138" | 19-028 | 25 | 8" | |
| | 19-018 | 25 | 10" | |
| | 19-019 | 20 | 10" | |

Use 8" pre-cut lengths with Jet-Fit™ Express heads
Use 10" pre-cut lengths with Jet-Fit heads

Can't find what you're looking for?
Try us online to search the latest products available.

OregonProducts.com

**Important Trimmer Line Information**
Any monofilament trimmer line can lose moisture over time or become brittle, especially if subjected to heat and sunlight. To reduce brittleness, Oregon® strongly recommends that line be submerged in water for 24 hours.

| OREGON | Replaces | Description | Product Code |
|---|---|---|---|

## Trimmer Line Cutter

| | | | |
|---|---|---|---|
| 21-000 | Universal | **Trimmer Line Cutter**<br>Safe and simple to use. Simply bend the line at the point you want to cut and push into the tool. | |

## Lightning Load™ Bump & Feed Head Trimmer Heads

Lightning Load bump and feed trimmer heads for straight-shaft trimmers:

- Quickly replace trimmer line through eyelets without opening head
- Spool divider prevents line tangle
- Available in either 4-1/4" or 5" diameter sizes

| OREGON | Description | Product Code |
|---|---|---|
| 55-989 | **Lightning Load**<br>Bump feed – small<br>**Adaptors Included:**<br>7 mm x 1.0 LHM<br>8 mm x 1.25 LHM<br>10 mm x 1.25 LHF<br>10 mm x 1.25 LHF counter bore<br>10 mm x 1.00 LHF counter bore | |
| 55-990 | **Lightning Load**<br>Bump feed – large<br>**Adaptors Included:**<br>7 mm x 1.0 LHM<br>8 mm x 1.25 LHM<br>10 mm x 1.25 LHF<br>10 mm x 1.25 LHF counter bore<br>10 mm x 1.00 LHF counter bore | |

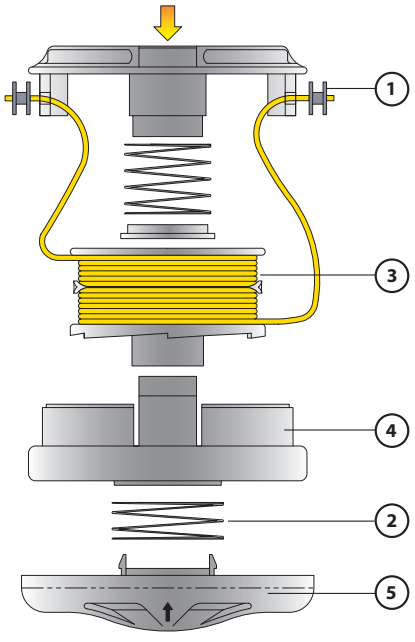


| № | OREGON | Description | Product Code |
|---|---|---|---|
| **55-989 Replacement Parts** | | | |
| 1 | 55-516 | Eyelets | |
| 2 | 55-517 | Spring | |
| 3 | 55-518 | Spool | |
| 4 | 55-519 | Carrier | |
| 5 | 55-520 | Bump Knob | |
| **55-990 Replacement Parts** | | | |
| 1 | 55-516 | Eyelets | |
| 2 | 55-521 | Spring | |
| 3 | 55-522 | Spool | |
| 4 | 55-523 | Carrier | |
| 5 | 55-524 | Bump Knob | |

T

# Trimmer Line & Heads

## Similar to Speed-Feed® Heads, 2-Line

Easy line loading takes 30 seconds or less. No disassembly required. Simply slide line through head until half of amount to be added is on each side of the head, grasp the easy grip collar and wind line in. Rugged semi-matic head is designed for medium to heavy-duty applications. Inner wall reduces debris inside the head and large durable eyelets increase line life. Line tensioning system with split spool reduces vibration. Part numbers 55-294 & 55-265 mount on most straight-shaft trimmers using the included adaptors similar to Speed-Feed.

| OREGON | Description | Product Code |
|---|---|---|
| 55-294 | **Trimmer Head**<br>3-3/4" LH spool<br>**Adaptors Included:**<br>7 mm x 1.0 LH<br>8 mm x 1.25 LH<br>10 mm x 125 LH | |
| 55-265 | **Trimmer Head**<br>4-1/2" LH spool<br>**Adaptors Included:**<br>7 mm x 1.0 LH<br>8 mm x 1.25 LH<br>10 mm x 125 LH | |

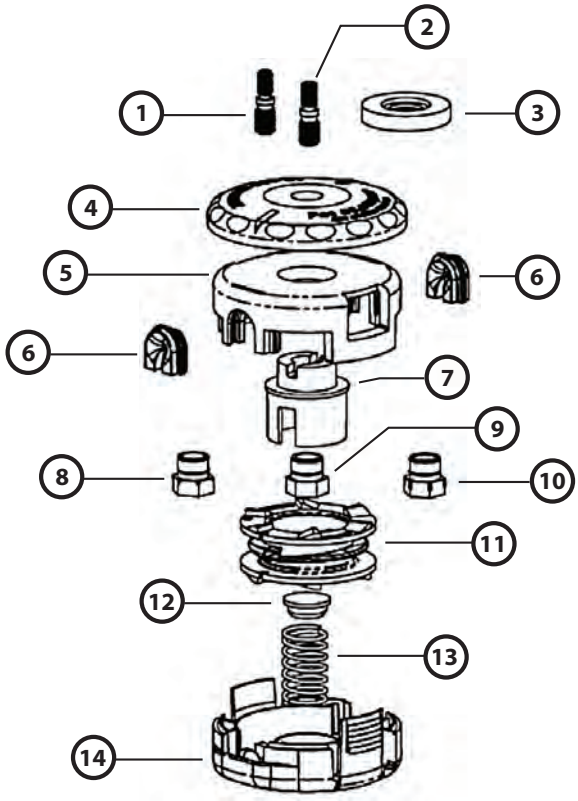


| № | OREGON | Description | Fit-Up | Product Code |
|---|---|---|---|---|
| **Replacement Parts** | | | | |
| 1 | 55-337 | Arbor Stud<br>M7 x 1 (LH) | 55-294<br>55-265 | |
| 2 | 55-338 | Arbor Stud<br>M8 x 1.25 (LH) | 55-294<br>55-265 | |
| | 55-352 | Arbor Stud<br>M8 x 1.25 (RH) | 55-264 | |
| 3 | 55-345 | Spacer | 55-294<br>55-264<br>55-265 | |
| 4 | 55-298 | Knob | 55-294<br>55-264 | |
| 5 | 55-296 | Eyelet Carrier | 55-294<br>55-264 | |
| | 55-347 | Eyelet Carrier | 55-265 | |
| 6 | 55-336 | Eyelet | 55-294<br>55-264<br>55-265 | |
| 7 | 55-295 | Core | 55-294<br>55-264<br>55-265 | |
| 8 | 55-288 | Arbor Bushing<br>M10 x 1 (LH) | 55-294<br>55-265 | |
| 9 | 55-287 | Arbor Bushing<br>M10 x 1.25 (LH) | 55-294<br>55-265 | |
| 10 | 55-289 | Arbor Bushing<br>M8 x 1.25 (LH) | 55-294<br>55-265 | |
| 11 | 55-299 | Spool (LH) | 55-294 | |
| | 55-348 | Spool (LH) | 55-265 | |
| 12 | 55-339 | Spring Cap | 55-294<br>55-264<br>55-265 | |
| 13 | 55-344 | Spring | 55-294<br>55-264<br>55-265 | |
| 14 | 55-297 | Cover | 55-294<br>55-264 | |
| | 55-349 | Cover | 55-265 | |

T

## Similar to Speed-Feed® Head, Application Chart

Left Hand Thread Units: P/N 55-294 (33/4" LH Trimmer Head)
P/N 55-265 (41/2" LH Trimmer Head)

| LH1 | LH2 | LH3 | LH4 | LH5 | LH6 |
|---|---|---|---|---|---|
| 7 mm x 1.0LHM | 8 mm x 1.25LHM | 10 mm x 1.25LHM | 8 mm x 1.25LHF | 10 mm x 1.0LHF | 10 mm x 1.25LHF |

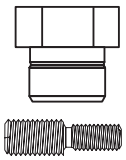
(gold)

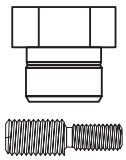
(silver)

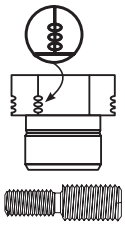
(silver)

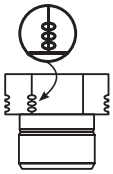

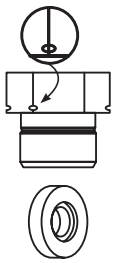

Echo SRM – P/N 55-265 450LH +

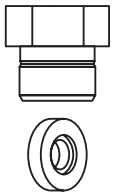

### Echo

| | |
|---|---|
| **LH6*** | SRM SERIES: 140, 200, 202, 210, 220, 230, 250, 251, 260, 261, 265, 280, 300, 302, 303, 311, 330, 340, 343, 350, 400, 402, 500, 501, 1500, 1501, 2010, 2090, 2100, 2110, 2200, 2201, 2300, 2301, 2400, 2410, 2450, 2500, 2501, 2502, 2510, 2530, 2601, 3000, 3001, 3010, 3100, 3110, 3400, 3410, 3500, 3550, 3800, & 4600 |

### Homelite

| | |
|---|---|
| **LH2*** | HK-24 (to 1/1/'86), HK30 (after 1/1/86), HK33 (to 1/1/86) |
| **LH4*** | BCH20, BCH24, BCH32, BCH33, BCH40, BCH48, HBC-30, HBC-38, HK-15, HK 18 (after 1/1/86), HK-28, HK24 (after 1/1/86), HK-25, HK-30 (up to 1/86), HK-33 (after 1/1/86), HK-38, PBC-3600, PBC-3800, PBC-4000, PBC-4000, PLT3400, ST-285, ST155, ST175, ST385, ST485 |
| **LH3*** | FK514, NBA524, PMB522, SX040, SXD40, TXD508 |
| **LH6*** | HBC40, PBC3800, PBC4000, PMB52, HBC48 |
| **LH2*** | ST80/100/120/160/180/200/210/360/ 385 (EURO) |
| **LH4*** | ST20/40/60/100/200/400, SXD20, RK521, TK518 |

### Honda

| | |
|---|---|
| **LH6*** | UMK422LNA/LTA, UMK431LNA/TA/UNBA, HHT25SLTAT, HHT-35SLTAT, HHT35SUKAT |

### Husqvarna

| | |
|---|---|
| **LH2*** | (Up to 86) 16R, 22R, 24R, 25RL |
| **LH1*** | 24R (up to ser #603702) |
| **LH6*** | 122L, 125L, 225L, 225LD, 225R, 225RD, 225RJ, 227LD, 232L, 232R, 322L, 322R, 324LX, 325LX/RX, 326LS/LX, 335LS |

### Jonsered

| | |
|---|---|
| **LH2*** | BP40, BP40COMBI, BP2040, BR400, BR420, BR450, BR460, BR480, BR500, Tiger 40, GT21L, GT22L, GT24L, GR26COMBI, GR26D, GR26L, GR32L, GR2026CL, GR2026D, LR200, LR220, LR260, LR320, LR400, LR420, LR450, LR460 |
| **LH5*** | RS38ANCIEN, RS38 older |
| **LH6*** | RS44, GR44, GR41, J40D, KQ20/30 (EURO) |

### Maruyama

| | |
|---|---|
| **LH2*** | BC184, BC184C, BC200, BC201, BC230, BC241, BC260, BC260H, BC310, BC320, BC320H, BC326, BC340DL, BC402, BC420H, BC500, BC500H, BC2300, BC2321, BC2600, BC3021, BC3200, BC4200H, BCL2550, BCGX22, BCGX31, BCL2250 |
| **LH1*** | BC220DL, BC221DL |
| **LH4*** | BT17, BT220, BC200C, BC260C |
| **LH6*** | BC184C, BC200C, BC260C |
| **LH3*** | BC430DWM, BC440DWM, 32, 35, BC500 |

### McCulloch

| | |
|---|---|
| **LH3*** | MAC57, MAC90, MAC95, MAC100A |
| **LH6*** | PROMAC SERIES: III, IIISUP, IVSUP, PROSCAPER; SERIES: 28S, 32H, 32HDS, III IV, V, IS, II, IIHD, SEBIC, SUPMAC100A; PS1, PS2, PS3, PS4, PS5, SEBIV; EB SERIES: III, IVSL, 3, 4, 3SX, 32BCS, 35L, 280, 282, 285BCS, 297BCS, 325BC, 327BC, 2815, 2816 2817, 2818, |
| **LH2*** | MAC 22/23/30A, SUPERMAC 30AV, MS33, DELTA, 38AV, MS40, BP30AV, TD2400/3300/4000 |
| **LH3*** | MAC 57, MAC 90, MAC 95, MAC 100A, MAC 32, MAC 37 |

### Red Max

| | |
|---|---|
| **LH1*** | BC220DL, BC221DL, BC300DL, BC2300DL, BK235FL, BK345FL, BK435FL, BK530DL, BC17, BC23, BC32, BC240DL |
| **LH2*** | BC260DL, BC261DL, BC262DL, BC340DL, BC341DL, BC342DL, BC2600DL, BC430DWM, BC440DWM, BK346FL, BK245FLK, BK436FL, BC245A, BC260DM/DMU, BC340DWM/ FW, BC431DWM, BCD20, BCF01, BC2601S, BC3400DW, BC4400DW, BCX2600DS, BCZ2500S/SU/SW |
| **LH3*** | BC430DWM, BC440DWM, BC441DWM, BC442DWM, BC531DWM, BC532DWM, FBC22, FBC26 |
| **LH6*** | BC200, BC2000DL, BT2000, BT2001DL |

### Shindaiwa

| | |
|---|---|
| **LH1*** | T195, T220, T222, T230, T230s, T242, T242X, T2510, T2510X |
| **LH2*** | T260, T261, T261B/XR/XB, T272, T272X, T282, T282X, T300, T3410, T3410X |
| **LH3*** | BP35, T350, B45, B450 |

### Stihl

| | |
|---|---|
| **LH2*** | FS50, FS51, FS55, FS60, FS61, FS65, FS80, FS83, FS85, FS86, FS90, FS91, FS96 |
| **LH5*** | FS66, FS74, FS76, FS81, FS83, FS85, FS86, FS100, FS106, FS108, FS110, FS130, FS250, FS40, FS44, FS48, FS52, FS56, FS62, FS66, FS8 5, FS86, FS88, FS96, FS106, FS108, FS120, FS200, FS350, FS450, FS550 |

* For reference only. Indicates correct hardware to attach a Speed-Feed head to the listed trimmer.

## Replacement Trimmer Head for Stihl 25-2 Auto-Cut

| OREGON | Description | Product Code |
|---|---|---|
| 55-993 | Semi-Automatic Bump & Feed<br>Fits FS44, FS55, FS80, FS83, FS85, FS90, FS100, FS110, FS120, FS130, FS20, FS250, KM55, KM85, KM90, KM110, KM130, & FS-KM | |

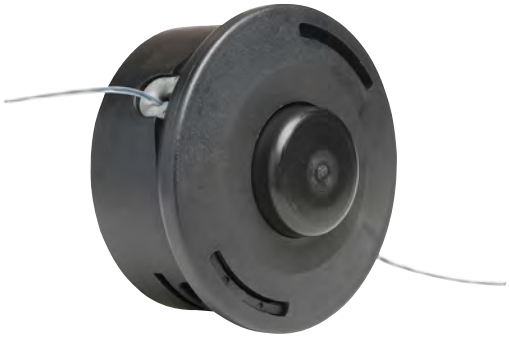

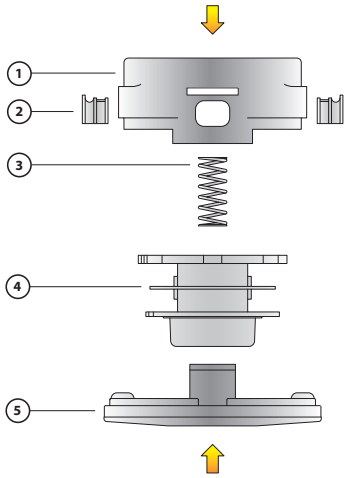


| № | OREGON | Description | Product Code |
|---|---|---|---|
| **Replacement Parts** | | | |
| 1 | -- | Upper Housing | |
| 2 | 55-972 | Eyelet | |
| 3 | 55-996 | Spring | |
| 4 | 55-971 | Spool | |
| 5 | 55-973 | Cover | |

## Multiple Application Bump & Go Trimmer Head

| OREGON | Description | Product Code |
|---|---|---|
| 55-994 | **Bump & Go Trimmer Head**<br>Fits Homelite, Ryobi, MTD, & McCulloch<br>For curved-shaft trimmers with extended spindle shafts Includes 5/16" right hand thread, 5/16" left hand thread, & 1/4" right thread knobs | |

| OREGON | Description | Product Code |
|---|---|---|
| **Replacement Parts** | | |
| 55-821 | 5/16 RH bump knob | |
| 55-816 | 5/16 LH bump knob | |
| 55-743 | 1/4 RH bump knob | |

T

## 4" Heavy-Duty Magnum Gatorhead™

With a 18" cutting swath this Magnum Gatorhead can be used on nearly all commercial straight-shaft trimmers. Constructed out of high-quality, shock-resistant nylon material, this product is designed to withstand impact damage.
Line capacity: 60' – .065" line, 40' – .080" line, 30' – .095" line, and 20' – .105" line.

| OREGON | Description | Product Code |
|---|---|---|
| 55-140-0 | **Universal 4" Heavy-Duty Magnum Gatorhead**<br>Pre-loaded with trimmer line<br>Counterbore hardware<br>Recess adaptor bolts<br>Recessed base<br>Packaged in an attractive clamshell<br><br>**Adaptors Included**<br>8 mm x 1.25 LHM & LHF<br>10 mm x 1.25 LHM & LHF<br>10 mm x 1.0 LHF<br>7 mm x 1.0 LHM<br>3/8-24 RHF | |

| № | OREGON | Description | Product Code |
|---|---|---|---|
| **Replacement Parts** | | | |
| 1 | 55-159 | Upper Housing | |
| 2 | | Spring | |
| 3 | 55-145-1 | Line Spool | |
| 4 | | Cap | |
| 5 | 55-150-1 | Spring Plate Washer | |
| 6 | 55-974 | 12 mm Arbor Adaptor | |

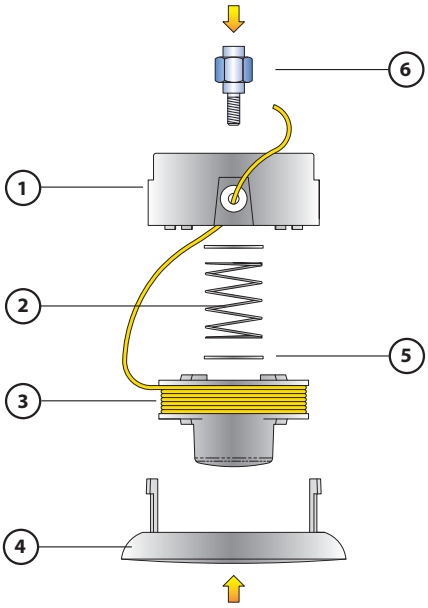


T

## Replacement Parts for Diskontinued Trimmer Heads 55-141-0 and 55-068

**55-141-0** replacement parts for 6" Heavy-Duty Magnum Gatorhead™

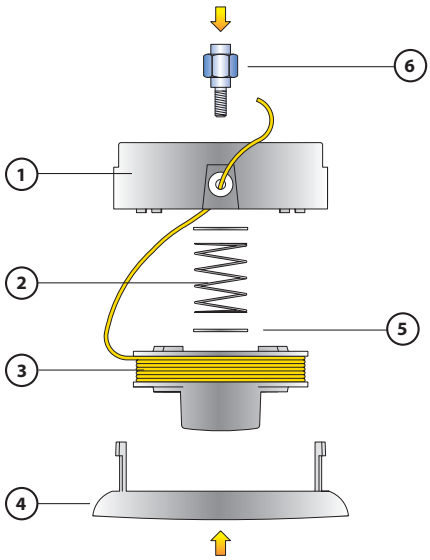


| № | OREGON | Description | Product Code |
|---|---|---|---|
| **55-141-0 Replacement Parts** | | | |
| 1 | | Upper Housing | |
| 2 | | Spring | |
| 3 | | Line Spool | |
| 4 | | Cap | |
| 5 | 55-150-1 | Spring Plate Washer | |
| 6 | 55-974 | 12 mm Arbor Adaptor | |

**55-068** replacement parts

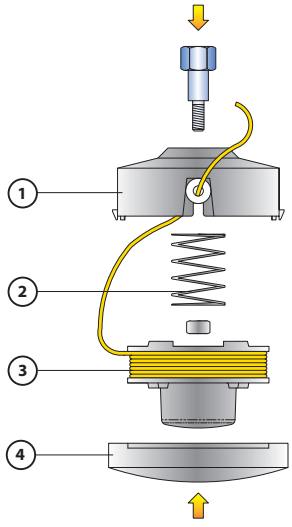


| № | OREGON | Description | Product Code |
|---|---|---|---|
| **55-068 Replacement Parts** | | | |
| 1 | | Housing | |
| 2 | 55-142-1 | Spring | |
| 3 | 55-136-1 | Spool & Bump Knob | |
| 4 | 55-137-1 | Cap | |

T

## Eyelet Load Bump & Feed Heads

Quickly replace trimmer line without opening head. Loads through bump knob or eyelets. Spool divider prevents line tangle. Holds 20 feet of 0.095" line.

| OREGON | Description | Adaptors Included | Product Code |
|---|---|---|---|
| **Lightning Load™** | | | |
| 55-985 | Bump and Feed for straight-shaft trimmers | 10 mm x 1.0 LHF<br>10 mm x 1.25 LHF CB<br>8 mm x 1.25 LHM<br>7 mm x 1.0 LHM | |
| 55-986 | Bump and Feed for curved-shaft trimmers | 3/8-24 RHF | |

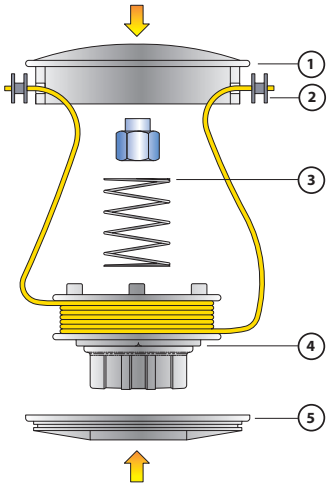


| № | OREGON | Description | Product Code |
|---|---|---|---|
| **55-985 Replacement Parts** | | | |
| 1 | | Housing | |
| 2 | 55-556 | Eyelet | |
| 3 | 55-558 | Spring | |
| 4 | 55-559 | Spool | |
| 5 | 55-560 | Cover | |
| **55-986 Replacement Parts** | | | |
| 1 | | Housing | |
| 2 | | Eyelet | |
| 3 | 55-562 | Spring | |
| 4 | 55-563 | Spool | |
| 5 | | Cover | |

## Eyelet Load Bump & Feed Semi-Automatic Head

For straight-shaft trimmers. Quickly replace trimmer line through eyelets without opening head. Spool divider prevents line tangle. Holds 20 feet of 0.095" line.

| OREGON | Description | Adaptors Included | Product Code |
|---|---|---|---|
| **Lightning Load** | | | |
| 55-984 | Bump and Feed semi-automatic head | 7 mm x 1.00LHM<br>8 mm x 1.25LHM<br>10 mm x 1.25LHF<br>10 mm x 1.25 LHF CB<br>10 mm x 1.00 LHF CB | |

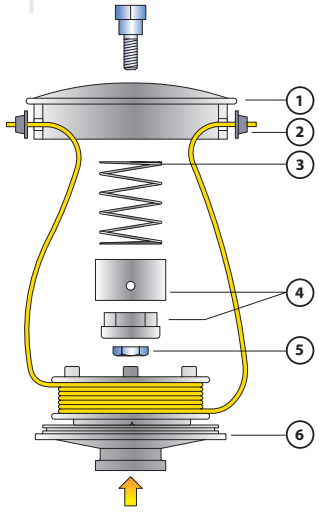


| № | OREGON | Description | Product Code |
|---|---|---|---|
| **Replacement Parts** | | | |
| 1 | | Housing | |
| 2 | | Eyelet | |
| 3 | 55-553 | Spring | |
| 4 | | Cam Assembly | |
| 5 | | Nut | |
| 6 | 55-555 | Spool | |

T

# Trimmer Line & Heads

## Pro Bump & Feed Heavy-Duty Head

Fits most straight-shaft trimmers. Works for single or dual line indexing. Large capacity will hold up to 40 feet of 0.095 line.

| OREGON | Adaptors Included | Product Code |
|---|---|---|
| **Pro Bump and Feed Heavy-Duty Trimmer Head** | | |
| 55-983 | 7 mm x 1.00 LHM<br>8 mm x 1.25 LHM<br>10 mm x 1.25 LHF | |

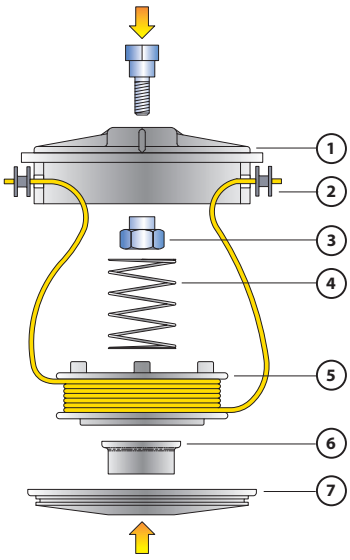


| № | OREGON | Description | Product Code |
|---|---|---|---|
| **Replacement Parts** | | | |
| 1 | | Housing | |
| 2 | | Eyelet | |
| 3 | | Nut | |
| 4 | 55-545 | Spring | |
| 5 | 55-549 | Spool | |
| 6 | 55-550 | Button | |
| 7 | 55-551 | Cover | |

## Bump & Feed Semi-Automatic Heads

A favorite among many major OEM's, this trimmer head features single or dual line indexing with equal line extension. Recommended for trimmers under 28cc.

| OREGON | Included Bolts | Product Code |
|---|---|---|
| **Bump & Feed Semi-Automatic Heads – 1 or 2 Line** | | |
| 55-284 | 7 mm x 1.0 LHM<br>8 mm x 1.25 LHM<br>10 mm x 125 LHF | |

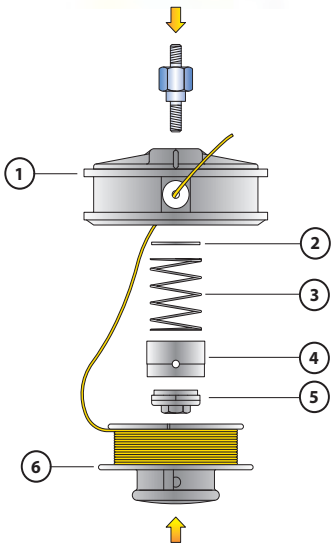


| № | OREGON | Description | Product Code |
|---|---|---|---|
| **Replacement Parts** | | | |
| 1 | | Housing | |
| 2 | | Washer (OBS) | |
| 3 | 55-302-1 | Spring | |
| 4 | 55-304-1 | Outer Driver | |
| 5 | 55-305-1 | Inner Cam LH | |
| 6 | 55-286 | Spool (4 slots LH) | |
| 6 | 55-328 | Spool (4 slots RH) | |

T

## Two-Line Manual Feed Multi-Bolt Head

For consumer users of small, medium and large size trimmers, this heavy-duty head with manual line feed fits nearly all trimmers.

| OREGON | Included Bolts | Product Code |
|---|---|---|
| **Manual 2-Line Feed Head** | | |
| 55-069-0 | 7 mm x 1.0 LHM<br>8 mm x 1.25 LHF & LHM<br>10 mm x 1.25 LHF & LHM<br>10 mm x 1.00 LHF<br>3/8"-24 RHF & RHM | |

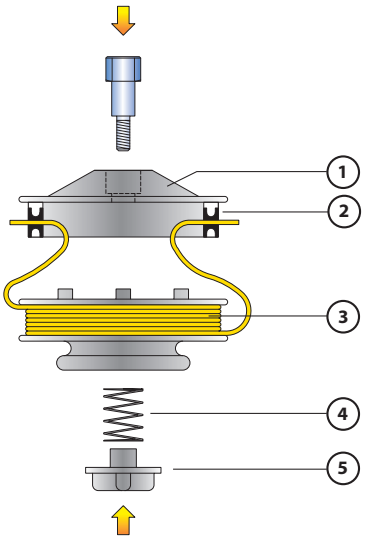


| № | OREGON | Description | Product Code |
|---|---|---|---|
| **Replacement Parts** | | | |
| 1 | | Housing | |
| 2 | 55-002-1 | Eyelets | |
| 3 | | Spool | |
| 4 | | Spring | |
| 5 | 55-156-1 | Knob | |

T

## Replacement Parts for Diskontinued Trimmer Heads 55-082-1 and 55-035-1

**55-082-1** trimmer head replacement parts.

| № | OREGON | Replacement Parts | Product Code |
|---|---|---|---|
| **Replacement Parts** | | | |
| 1 | | Housing | |
| 2 | 55-002-1 | Eyelet | |
| 3 | | Nut | |
| 4 | 55-804-1 | Spring | |
| 5 | 55-809-1 | Spool RH | |
| 6 | 55-807 | Button | |
| 7 | 55-808-1 | Cover | |

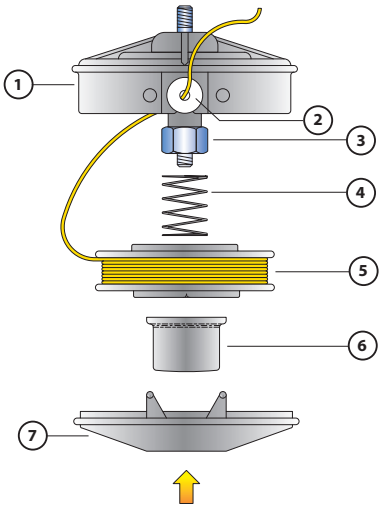

**55-035-1** trimmer head replacement parts.

| № | OREGON | Replacement Parts | Product Code |
|---|---|---|---|
| **Replacement Parts** | | | |
| 1 | | Housing | |
| 2 | 55-002-1 | Eyelet | |
| 3 | 55-302-1 | Spring | |
| 4 | 55-355-1 | Spool | |
| 5 | 55-356-0 | Button | |
| 6 | 55-357-1 | Cover | |

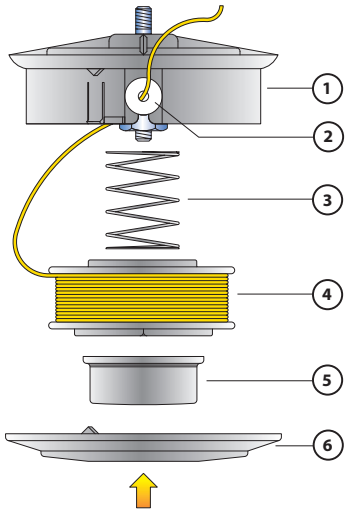

T

## Jet-Fit™ Trimmer Heads

An easy-to-load fixed-line head designed for use with FlexiBlade™. These heads also work with all types and sizes of trimmer line, and fit the majority of counterclockwise-turning trimmers. Jet-Fit heads mount on trimmers using the trimmer's blade bolt or nut and one of the basic adapter washers included (8mm, 10mm, 12mm, 15mm) or the reduction-ring adapter for trimmers requiring a 20 mm arbor. The adaptors packaged with Jet-Fit heads also include several others for fit-up to trimmers having different mounting requirements.

**NOTE**: Jet-Fit heads are attached using the trimmer's blade bolt or nut mounting bolts are not packaged with Jet-Fit heads. In Canada, Jet-Fit heads have been replaced with Flexihead™ trimmer heads:

- Oregon® 55-403 is Oregon 55-407 in Canada
- Oregon 55-404 is Oregon 55-408 in Canada

**55-403** **2-Line Aluminum Jet-Fit Trimmer Head**
Use on trimmers > 25cc

| OREGON | Description | Product Code |
|---|---|---|
| 55-485 | Pawl & Spring Kit<br>4 pieces: 2 springs & 2 pawls | |
| 55-488 | Glide Cone | |

## Kwik Loader® Trimmer Heads

**55-406-0** **Jet Fit™ Express Trimmer Head**
Adaptors, bolts and nuts included to fit most trimmers
The Oregon® Jet-Fit Express head features square eyelets making it an excellent choice for use with FlexiBlade™. Easy loading and unloading, just push to load and pull to unload. Square eyelets hold FlexiBlade securely, and at the right angle for maximum cutting force.
Can be used with all sizes and shapes of line
Packaged in clamshells for easy display and easy sales

| OREGON | Description | Product Code |
|---|---|---|
| 55-417 | Square Eyelets<br>For Oregon 55-406-0<br>Package of 2 | |

**NOTE**: In Canada this Jet-Fit Express Head has been replaced with Flexihead™ Trimmer Head P/N 55-409.

T

# Trimmer Line & Heads

| OREGON | Replaces | Description | Product Code |
|---|---|---|---|

## Pivotrim® Trimmer Heads

**55-491** **Pivotrim Pro Trimmer Head**
Fits 99% of straight-shaft gas trimmers
Quick reloads and uses less line
Uses .105" line or smaller
Designed for professional landscapers

| OREGON | Description | Product Code |
|---|---|---|
| 55-492 | Replacement eyelet<br>For Oregon 55-491<br>Pro Pivotrim | |

## Pivotrim Trimmer Line

| OREGON | Description | Product Code |
|---|---|---|
| 19-037 | 24-pack of 12" line, .095" diameter | |
| 19-038 | 24-pack of 12" line, .105" diameter | |

## Fixed Line Head

This heavy-duty commercial design offers easy line changes, without the need for disassembly or tools. Die-cast aluminum head mounts using one adaptor and the trimmer's blade bolt or nut. Uses one 16" trimmer line. Line capacity: .080", .095", .130", & .155". Includes replaceable plastic glide plate.

**NOTE**: Use .155" line on straight-shaft trimmers with engines 31cc and larger.

| OREGON | Description | Adaptors Included | Product Code |
|---|---|---|---|
| 55-191 | Die-cast aluminum<br>Fixed-line trimmer head<br>Ships with .130" line | Included for most trimmers | |
| 55-194 | Glide Cone<br>For 55-191 | | |

T

**WARNING:** High-speed cutting tools present risk of serious injury to operators or bystanders from thrown objects or from contact with rotating cutting attachments. Read and follow all instructions below for proper fitting and for safe and proper use of blades and trimmer heads.

## Attention Dealers

OREGON® URGES YOU TO READ AND FOLLOW ALL OF THESE SAFETY GUIDELINES WHEN SELECTING, INSTALLING, SERVICING OR OPERATING ANY CUTTING ATTACHMENTS FOR TRIMMERS OR BRUSHCUTTERS. ENCOURAGE YOUR CUSTOMERS TO DO THE SAME.

The application charts on the following pages are based on the best information available to Oregon at the time of printing. We take care that listed applications are accurate, but it is your responsibility to assure that Oregon cutting attachments are correctly and appropriately fitted to equipment you service. Some trimmers and brushcutters offer more than one cutting-attachment shield. Be sure to use the appropriate shield for the cutting attachment installed. Inadequate shielding can expose operators and bystanders to the risk of serious injury.

Important safety and maintenance information is often printed on Oregon packaging. When installing new cutting attachments, do not diskard such packaging — give it to your customer.

## Trimmer/Brushcutter Safety Instructions

**Check that cutting-attachment shields are properly located and in good condition. Never remove, modify or in any way compromise the cutting-attachment shield to accommodate a cutting attachment, or for any other reason.** The shield protects against inadvertent contact with the cutting attachment and reduces the risk of the operator and bystanders being struck by objects that may be picked up and thrown violently by the rotating tool. **Read and follow all instructions supplied by the manufacturer of the trimmer/brushcutter.** Manufacturers' instructions include important additional information regarding safe use and proper maintenance procedures for their products.

**Rigid blades must be used only on brushcutters designed to accommodate blades. Never use a metal cutting attachment on a brushcutter without a shoulder harness, properly mounted barrier handlebar and cutting-attachment shield in good condition. Never remove the cutting-attachment shield.** These features are designed to minimize the risk of inadvertent contact with the cutting blade, reduce the risk of injury to the operator and bystanders from thrown objects and to aid in control of the brushcutter. Contact with rigid blades can result in severe bodily injury.

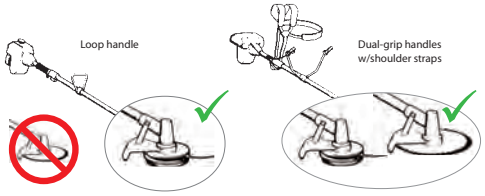


**Be certain that replacement cutting attachments are fitted properly with regard to the direction of rotation, the size of the mounting bolt and the size of the arbor.** Improperly mounted attachments can damage the machine or work loose and be thrown off, causing injury to the operator or bystanders. Do not mount any attachment on any trimmer or brushcutter without a solid, secure fit of all parts.

**Do not install Oregon trimmer heads on any trimmer capable of spinning the attachment faster than 10,000 RPM. And do not install Oregon metal blades on any brushcutter capable of spinning the blade faster than 10,000 RPM.** Speeds higher than these may cause the cutting attachment to break and fly apart, especially if they become damaged in use, with pieces possibly striking and injuring the operator or bystanders.

**Check the condition of cutting attachments frequently. Always replace cutting attachments that are cracked, bent, or warped—even if such damage appears to be superficial. Never attempt to repair damaged cutting attachments by welding or bending.** There is a risk that damaged cutting attachments will fly apart, with pieces possibly striking and injuring the operator or bystanders.

**Always wear eye, face, ear, hand, leg, and foot protection during operation.** These precautions reduce the risk of injury from noise or from material that may be thrown by the cutting attachment. Do not wear shorts or short-sleeved shirts. Wear safety glasses or similar eye protection.

**Keep bystanders and pets at least 50 feet (15m) away in all directions. Always clear the work area of rocks, glass, wire, nails, or other foreign objects that can be picked up and thrown by the rotating cutting attachment.** Trimmers and brushcutters can violently throw loose objects, or uncontrollably thrust away from objects they contact but cannot cut. Keep bystanders away.

**Sharpen or maintain the cutting attachment according to instructions packaged with the attachment.** A dull tool is more difficult to use. Failure to sharpen, or incorrect sharpening of metal blades, can lead to cracks that may result in breakage, exposing the operator and bystanders to the risk of serious personal injury.

**Use cutting attachments to cut only the types of material for which the attachment is designed.** If used improperly, cutting attachments may become damaged and may break, increasing the risk of serious personal injury to the operator or bystanders.

**Diskonnect power to the trimmer/brushcutter before performing any service.** There is always a risk that the cutting attachment will inadvertently be started if the machine is under power.

**Do not install metal blades on curved-shaft trimmers.**

For safety reasons, metal blades should not be attached to straight or curved-shaft trimmers with a **loop-handle**. Use only nylon-line heads on these trimmers.

**Dual-grip handle bar** type trimmers equipped with shoulder straps and proper cutting-attachment shields can accept either metal blades or nylon-line heads.

T

# Trimmer Head Application Chart

| Model Numbers & Mounting Bolts | HD Commercial Bump & Feed | HD Commercial Bump & Feed (Eyelet Load) | Bump & Feed | Bump & Feed (Eyelet Load) | 4" Heavy-Duty Magnum Gator-head™ | 2–Line Speed Feed 3.75" LH | Lightning Load™ Bump & Feed 4.25" LH | Lightning Load Bump & Feed 5.00" LH | Cool Head Bump & Feed 4.50" RH | Cool Head Bump & Feed 6.00" LH |
|---|---|---|---|---|---|---|---|---|---|---|
| **Alpina** | | | | | | | | | | |
| 170, 180, 200 | | | | | | | | | | |
| 8mm x 1.25 LHM | 55-987 | 55-984 | 55-983 | 55-985 | 55-140-0 | 55-294* | 55-989 | 55-990 | | 55-992 |
| 21, 25, 30, 34, 34D, 34F, 42, 42D, 42F, 52, 52D, 52F, 160 | | | | | | | | | | |
| 8mm x 1.25 LHF | | | | | 55-140-0 | 55-294* | 55-989 | 55-990 | | |
| 210 | | | | | | | | | | |
| 10mm x 1.25 LHF | 55-987 | 55-984 | 55-983 | 55-985 | 55-140-0 | 55-294* | 55-989 | 55-990 | | 55-992 |
| **Ariens** | | | | | | | | | | |
| BC-350, BC-400, TB-220E, TB260 | | | | | | | | | | |
| 8mm x 1.25 LHM | 55-987 | 55-984 | 55-983 | 55-985 | 55-140-0 | 55-294* | 55-989 | 55-990 | | 55-992 |
| LT-210, LT210e | | | | | | | | | | |
| 8mm X 1.25 RHF | | | | | | | | | | |
| **Arimitsu** | | | | | | | | | | |
| AC-ZEK, ACC-17, ACD-17, ACD-18, ACE-30, AM-31, AM31K, AM40, AM-50, ACC-15, AM-16D, AM-24D | | | | | | | | | | |
| 8mm x 1.25 LHM | 55-987 | 55-984 | 55-983 | 55-985 | 55-140-0 | 55-294* | 55-989 | 55-990 | | 55-992 |
| **Astron** | | | | | | | | | | |
| S250 (1984, 1986), S150 (1986), S250 (1983), 256E, KFS4 SERIES, KFS12 | | | | | | | | | | |
| 7mm x 1.0 LHM | 55-987 | 55-984 | | 55-985 | 55-140-0 | 55-294* | 55-989 | 55-990 | | 55-992 |
| KFS22, KFS24, P750, PK2400E, PK3300E | | | | | | | | | | |
| 8mm x 1.25 LHM | 55-987 | 55-984 | 55-983 | 55-985 | 55-140-0 | 55-294* | 55-989 | 55-990 | | 55-992 |
| S250 (1988) | | | | | | | | | | |
| 10mm x 1.25 LHF | 55-987 | 55-984 | 55-983 | 55-985 | 55-140-0 | 55-294* | 55-989 | 55-990 | | 55-992 |
| **Black+Decker** | | | | | | | | | | |
| 82255, 82257, 82267. 8271-04, 8289-4 | | | | | | | | | | |
| 3/8-24 RHF | 55-032-1 | | | 55-986 | | | | | 55-991 | |
| 8DP 385 | | | | | | | | | | |
| 7/16-20 RHF | | | | | | | | | | |
| 17CCM TRIMMER | | | | | | | | | | |
| 8mm x 1.25 RHF | | | | | | | | | | |
| **Brush King** | | | | | | | | | | |
| BK32, BK32LT, BK49, BK85, BK100 | | | | | | | | | | |
| 8mm x 1.25 LHM | 55-987 | 55-984 | 55-983 | 55-985 | 55-140-0 | 55-294* | 55-989 | 55-990 | | 55-992 |
| **Bunton** | | | | | | | | | | |
| LBS 18K, LB 24S K | | | | | | | | | | |
| 8mm x 1.25 LHF | | | | | 55-140-0 | 55-294* | 55-989 | 55-990 | | |

**WARNING**: Improperly installed trimmer attachments can create a risk of personal injury to the trimmer operator or bystanders. Improperly installed attachments can work loose and be thrown off the trimmer. In some cases, mounting bolts may not securely fit all intended trimmer models, for example: there may be a difference in the size of the bolt's counterbore versus the counterbore on the trimmer. Do not install any attachment on any trimmer without a solid, secure fit of all parts.
**ATTENTION DEALERS**: Install heads only on trimmers that are within the size range (cc displacement or horsepower) for which the head is intended. Performance will suffer if the type of head and the size of trimmer are not properly matched. Read and follow all of the Important Safety Information.

**F** = Female • **M** = Male • **LH** = Left-hand • **RH** = Right-hand • **CB** = Counterbore

*order 55-265 for 450 LH Speed Feed

# Trimmer Head Application Chart

| Model Numbers & Mounting Bolts | HD Commercial Bump & Feed | HD Commercial Bump & Feed (Eyelet Load) | Bump & Feed | Bump & Feed (Eyelet Load) | 4" Heavy-Duty Magnum Gator-head™ | 2–Line Speed Feed 3.75" LH | Lightning Load™ Bump & Feed 4.25" LH | Lightning Load Bump & Feed 5.00" LH | Cool Head Bump & Feed 4.50" RH | Cool Head Bump & Feed 6.00" LH |
|---|---|---|---|---|---|---|---|---|---|---|
| **Bunton** | | | | | | | | | | |
| LBS33K | | | | | | | | | | |
| 10mm x 1.5 LHF | | | | | | 55-294* | 55-989 | 55-990 | | |
| **Cifarelli** | | | | | | | | | | |
| STANDARD | | | | | | | | | | |
| 10mm x 1.25 LHF | 55-987 | 55-984 | 55-983 | 55-985 | 55-140-0 | 55-294* | 55-989 | 55-990 | | 55-992 |
| **Danarm** | | | | | | | | | | |
| 23MK1, 23MK2, 33 | | | | | | | | | | |
| 10mm x 1.5 LHF | | | | | | | | | | |
| 32, 35, 40, 50 | | | | | | | | | | |
| 10mm x 1.25 LHM | | | | | 55-140-0 | 55-294* | 55-989 | 55-990 | | |
| MK2, MK23E, MK3, TORNADO | | | | | | | | | | |
| 8mm x 1.25 LHF | | | | | 55-140-0 | 55-294* | 55-989 | 55-990 | | |
| WHIPPER MK3 | | | | | | | | | | |
| 10mm x 1.25 LHF | 55-987 | 55-984 | 55-983 | 55-985 | 55-140-0 | 55-294* | 55-989 | 55-990 | | 55-992 |
| **Dolmar (see Sachs)** | | | | | | | | | | |
| BC-225, LT-154, LT225, MS220, MS2300, MS2600, MS3100, MX20C, MS2501, MS28210, MS3210, NB2, NBA231, NB, NB01F, NB02, NB16F, NB2, NB211, NBF171, NB26, NB31 | | | | | | | | | | |
| 8mm x 1.25 LHF | | | | | 55-140-0 | 55-294* | 55-989 | 55-990 | | |
| LT16, LT20, BC210, BC212, BDC212 | | | | | | | | | | |
| 3/8-24 RHF | 55-032-1 | | | 55-986 | | | | | 55-991 | |
| MS340, LT250 | | | | | | | | | | |
| 10mm x 1.25 LHF | 55-987 | 55-984 | 55-983 | 55-985 | 55-140-0 | 55-294* | 55-989 | 55-990 | | 55-992 |
| 300, 400, MS-300, MS-4000, MS-4500 | | | | | | | | | | |
| 12mm x 1.5 LHF | | | | | | | | | | |
| BC300, BC400, LT250, SD330, PRO370/400 | | | | | | | | | | |
| 10mm x 1.25 LHM | | | | | 55-140-0 | 55-294* | 55-989 | 55-990 | | |
| BC250, BC337, BC377, LT225, LT250, NB03/04/26, NB40, NB411, NB50 | | | | | | | | | | |
| 10mm x 1.0 LHF | 55-987 | | 55-038-1 | 55-985 | 55-140-0 | 55-294* | 55-989 | 55-990 | | |
| LT225 | | | | | | | | | | |
| 8mm x 1.25 RHF | | | | | | | | | | |
| **Echo** | | | | | | | | | | |
| CLS4600 | | | | | | | | | | |
| 12mm x 1.75 LHF | | | | | | | | | | |
| GT SERIES: 100, 140, 140A, 140B, 160, 160AE, 200, 200A, 200B, 200BE, 200CE,251, 1000, 1100, 1100A, 2000, 2000SB, 2100, 2101, 2102, 2103, 2200, 2301, 2400; SRM2000, SRM210AE | | | | | | | | | | |
| 3/8-24 RHF | 55-032-1 | | | 55-986 | | | | | 55-991 | |

T

# Trimmer Head Application Chart

| Model Numbers & Mounting Bolts | HD Commercial Bump & Feed | HD Commercial Bump & Feed (Eyelet Load) | Bump & Feed | Bump & Feed (Eyelet Load) | 4" Heavy-Duty Magnum Gator-head™ | 2–Line Speed Feed 3.75" LH | Lightning Load™ Bump & Feed 4.25" LH | Lightning Load Bump & Feed 5.00" LH | Cool Head Bump & Feed 4.50" RH | Cool Head Bump & Feed 6.00" LH |
|---|---|---|---|---|---|---|---|---|---|---|
| **Echo** | | | | | | | | | | |
| SRM SERIES:140/A/D/DA, 200/A/AE/BE/CE/D/DA/DB/DE, 202:DA/FA, 210/AE/E/I/SB/U, 220, 225:I/SB/U, 230/S/U, 250/E/EL/EU, 251, 260/S/U, 261, 265/S/T/U, 280/S/T/U, 300/AE/AE1/E/E1/U, 302/ADX/BDX, 303E, 310/U, 311/S/U, 330, 340, 343/SL, 350, 400/AE/B/BE/E/U, 402DE, 500, 501, 1500/A, 1501, 2090:L/U, 2010L, 2100/SB, 2101, 2110, 2200, 2201, 2300, 2301, 2350, 2400/SB, 2410, 2450, 2500, 2501/S, 2502, 2510, 2530, 2601, 3000, 3001, 3010, 3100/S, 3110, 3400, 3410, 3500, 3550, 3800, 4600; CLS4600, GT2010, RM:310/380/460, RMA2530, SRA2190 | | | | | | | | | |
| 10mm x 1.25 LHF | 55-987 | 55-984 | 55-983 | 55-985 | 55-140-0 | | | | | 55-992 |
| **Efco** | | | | | | | | | | |
| DS2200S, DS2200T, DS2400S, DS2400T, DS 2700S, DS2800S, DS2800T, DS3000T, DS3500S, DS3500T | | | | | | | | | | |
| 10mm x 1.25 LHF | 55-987 | 55-984 | 55-983 | 55-985 | 55-140-0 | | | | | 55-992 |
| 200, 2601C, 300AIC, 400A, 460, 261A, 310, 410, JET200, 260, 261, 300A, 8420, 8420IC, 8510, 8510IC, 8425, JET350, JET400, 220IC, 260ICAV, 260D, 300AIC, 460/AVS, 8060, 8200, 8220IC, 835, 8400IC, 8300, 8350, 8400, 301, 350, 220IC, 260D, 2650ICAV, 8100, 8515, JET450, JET460 | | | | | | | | | | |
| 8mm x 1.25 LHM | 55-987 | 55-984 | 55-983 | 55-985 | 55-140-0 | 55-294* | 55-989 | 55-990 | | 55-992 |
| JET/401/400/301/300 | | | | | | | | | | |
| 8mm x 1.25 LHF | | | | | 55-140-0 | 55-294* | 55-989 | 55-990 | | |
| DS2200TR | | | | | | | | | | |
| 8mm x 1.25 RHF | | | | | | | | | | |
| **Flymo** | | | | | | | | | | |
| D2 | | | | | | | | | | |
| 8mm x 1.25 LHF | | | | | 55-140-0 | 55-294* | 55-989 | 55-990 | | |
| **Green Machine** | | | | | | | | | | |
| GT35B, GT40B, GT41, SRM3000, SRM3000LP, SRM3000SS, SRM3040M, 525H, 1200, 1500, 1600, 1700, 1930, 1940, 1950, 2000, 2100, 2130, 2200, 2230, 2300, 2331, 2340, 2345, 2500, 2500-LP, 2510-LP, 2540, 2540LP, 2600, 2800, 2810, 2840, 2841, 2850, 3000, 3000B, 3000J, 3000-LP, 3000M, 3000SS, 3040M, 3 050M, 3451, G2A, G2C, GT20, GT21, GT22, GT25, GT31, GT31B | | | | | | | | | | |
| 8mm x 1.25 LHM | 55-987 | 55-984 | 55-983 | 55-985 | 55-140-0 | 55-294* | 55-989 | 55-990 | | 55-992 |
| 4000, 4000B, 4000J, 4000M, 4000LP, 4500, 4500LPX, 4600LPX, BC250, BC400, D-17, D-18, G4C, SRM4000, SRM400LP, SRM4000M | | | | | | | | | | |
| 10mm x 1.25 LHM | | | | | 55-140-0 | 55-294* | 55-989 | 55-990 | | |
| 99D, 99G, 1730, 1800, 1900 | | | | | | | | | | |
| 7/16-20 RHF | | | | | | | | | | |
| **Hoffco** | | | | | | | | | | |
| GR320B, GTX, GTS-R, HOFFIE-22, LIL WIZ 600, LIL WIZ 1600, P22, WC-22, WC-215, WT SERIES: 14, 160, 160H, 160HT, 215, 250C, 250HT, 1600, CRITTER, GT SERIES: 14A, 14B, 14H, 21, 22, 160B, 160T, 160TL, 210, 211, 211A, 215T, 225, 225SPL, 256SPL, 320B, 320HT, 320T, 380; 250HT-A, 250WT, 320, 320H | | | | | | | | | | |
| 3/8-24 RHF | 55-032-1 | | | 55-986 | | | | | 55-991 | |
| WW88, WW850 | | | | | | | | | | |
| 7/16-20 RHF | | | | | | | | | | |
| JP SERIES: 215, 215GT, 220F, 225, 260, 260A, 260C, 270, 300, 300A, 300B, 300C, 300F, 320, 390, 390A, 390C, 390XL, 420, 420D, 660 | | | | | | | | | | |
| 10mm x 1.25 LHF | 55-987 | 55-984 | 55-983 | 55-985 | 55-140-0 | 55-294* | 55-989 | 55-990 | | 55-992 |

**WARNING**: Improperly installed trimmer attachments can create a risk of personal injury to the trimmer operator or bystanders. Improperly installed attachments can work loose and be thrown off the trimmer. In some cases, mounting bolts may not securely fit all intended trimmer models, for example: there may be a difference in the size of the bolt's counterbore versus the counterbore on the trimmer. Do not install any attachment on any trimmer without a solid, secure fit of all parts.
**ATTENTION DEALERS**: Install heads only on trimmers that are within the size range (cc displacement or horsepower) for which the head is intended. Performance will suffer if the type of head and the size of trimmer are not properly matched. Read and follow all of the Important Safety Information.

**F** = Female • **M** = Male • **LH** = Left-hand • **RH** = Right-hand • **CB** = Counterbore

*order 55-265 for 450 LH Speed Feed

# Trimmer Head Application Chart

| Model Numbers & Mounting Bolts | HD Commercial Bump & Feed | HD Commercial Bump & Feed (Eyelet Load) | Bump & Feed | Bump & Feed (Eyelet Load) | 4" Heavy-Duty Magnum Gator-head™ | 2–Line Speed Feed 3.75" LH | Lightning Load™ Bump & Feed 4.25" LH | Lightning Load Bump & Feed 5.00" LH | Cool Head Bump & Feed 4.50" RH | Cool Head Bump & Feed 6.00" LH |
|---|---|---|---|---|---|---|---|---|---|---|
| **Homelite** | | | | | | | | | | |
| HBC-30, HK-18 (1986 & newer), HK-24 (1986 & newer), HK-25, HK-30 (1985 & older) , HK-33 (1986 & newer), HK38, PBC3600, PBC-3800, PBC-4000, ST155, ST175, ST385, ST485, HK15, HK28, HK38, BCH SERIES, BCH20, BCH24, BCH32C, BCH32CDI, BCH33/B/DI/TO, BCH40, BCH48, HBC30, HBC30B, HBC38, PBC3600, PBC3800, PLT3400, ST385CG, PBC4000ST-285, ST-485, ST-385, ST20, ST40, ST60, ST100, ST200, ST400, SXD20, RK521, TK518 | | | | | | | | | | |
| 8mm x 1.25 LHF | | | | | 55-140-0 | 55-294* | 55-989 | 55-990 | | |
| HK-24 (1985 & older) HK-30 (1986 & newer), HK-33 (1985 & older) | | | | | | | | | | |
| 8mm x 1.25 LHM | 55-987 | 55-984 | 55-983 | 55-985 | 55-140-0 | 55-294* | 55-989 | 55-990 | | 55-992 |
| ST-175C, ST-185 | | | | | | | | | | |
| 7/16-20 RHF | | | | | | | | | | |
| NBA524, PMB522, TXD508, SX040, FK514, SXD40, TXD508 | | | | | | | | | | |
| 10mm x 1.25 LHM | | | | | 55-140-0 | 55-294* | 55-989 | 55-990 | | |
| ST160, ST180, ST200, ST210, ST385, ST485, | | | | | | | | | | |
| 3/8-24 LHF | | | | | | | | | | |
| HBC38, HBC40, PBC3800, PBC4000, PMB52, HBC48 | | | | | | | | | | |
| 10mm x 1.25 LHF | 55-987 | 55-984 | 55-983 | 55-985 | 55-140-0 | 55-294* | 55-989 | 55-990 | | 55-992 |
| HBC20, HBC24, HBC32C, HBC33, ST200, ST360, ST80SXD20, TK518, RK521, ST100, ST120, ST155, ST175CG | | | | | | | | | | |
| 8mm x 1.25 RHM | | | | | | | | | | |
| D630CD, D730CD, D730CDV, HLT-15, ST-135, ST-155, ST-175, ST-725CDR, Z625CD, Z725CA, Z725CB, Z725CDV, Z725CE, Z725CEA, Z735SE | | | | | | | | | | |
| 5/16 x 18 RHM | | 55-053 | | | | | | | | |
| ST145, ST155, ST175, ST175G, ST185, ST285, ST385BC, ST485, SX135, EASY TRIM, 20680, 77, ZR SERIES, D830CA, D830CB, D830SB, D830SD, EASY REACH, PLT-3400, PLTA-3400, VERSA TOOL, Z825SD, Z830SB, Z830SBA | | | | | | | | | | |
| Extended Spindle | | | | | | | | | | |
| ST 80/100/120/160/180/200/210/360/385(EURO) | | | | | | | | | | |
| 8mm x 1.25 LHM | 55-987 | 55-984 | 55-983 | 55-985 | 55-140-0 | 55-294* | 55-989 | 55-990 | | 55-992 |
| ST 20/40/60/100/200/400, SXD20, RK521, TK518 | | | | | | | | | | |
| 8mm x 1.25 LHF | | | | | 55-140-0 | 55-294* | 55-989 | 55-990 | | |
| AT-160, ST-180, ST-200, ST-210 | | | | | | | | | | |
| 3/8-24 LHF | | | | | | | | | | |
| **Honda** | | | | | | | | | | |
| UMK422LNA/LTA, UMK431LNA/TA/UNBA, HHT25SLTAT, HHT35SLTAT, HHT35SUKAT | | | | | | | | | | |
| 10mm x 1.25 LHF | 55-987 | 55-984 | 55-983 | 55-985 | 55-140-0 | 55-294* | 55-989 | 55-990 | | 55-992 |
| **Husqvarna** | | | | | | | | | | |
| (UP TO '86) 16R, 22R, 24R, 25RL | | | | | | | | | | |
| 8mm x 1.25 LHM | 55-987 | 55-984 | 55-983 | 55-985 | 55-140-0 | 55-294* | 55-989 | 55-990 | | 55-992 |
| 16R (AFTER '86) , 18R, 18RL, 22R (AFTER '86), 22RL, 25R (AFTER '86), 25RL, 36R, 39R, 120L, 120R, 125L, 125LD, 125R, 125RD, 125RJ, 132L, 132LD, 132R, 132RD, 132RJ, 140R, 132R, 132RD, 132RJ, 140R, 165RX, 235R, 240R, 240RBD, 244R, 244RS, 245R, 245RX, 250RX, 252RX, 265RX, 165RX, 235R, 240R, 240RBD, 244R, 244X, 245R, 245RX, 265RX, 232L, 232LCAT, 32R, 225R, RD, 232R, 232RCAT, 235RCAT, 125L/LD/R/RB/RJD/, 165R, 165TX, 36R, 39R26R, 32L, 39R, 244R (EURO) | | | | | | | | | | |
| 12mm x 1.75 LHF | | | | | | | | | | |
| HUSKY 27GTS, 244R, 250RX322C, 325LX, 322L, 322R, 240RJ, 250R, 325RX | | | | | | | | | | |
| 10mm x 1.5 LHF | | | | | | | | | | |

T

# Trimmer Head Application Chart

| Model Numbers & Mounting Bolts | HD Commercial Bump & Feed | HD Commercial Bump & Feed (Eyelet Load) | Bump & Feed | Bump & Feed (Eyelet Load) | 4" Heavy-Duty Magnum Gator-head™ | 2–Line Speed Feed 3.75" LH | Lightning Load™ Bump & Feed 4.25" LH | Lightning Load Bump & Feed 5.00" LH | Cool Head Bump & Feed 4.50" RH | Cool Head Bump & Feed 6.00" LH |
|---|---|---|---|---|---|---|---|---|---|---|
| **Husqvarna** | | | | | | | | | | |
| 24R (UP TO SER#603702) | | | | | | | | | | |
| 7mm x 1.0 LHM | 55-987 | 55-984 | | 55-985 | 55-140-0 | 55-294* | 55-989 | 55-990 | | 55-992 |
| 26LC, 26RLC, 32LC, 32RLC, MONDO, 32L, 32RL, 32R, 32RL, 216CN, 23LC, 26LC, 26RLC, 32LC, 32RLC, MONDO | | | | | | | | | | |
| 3/8-24 RHF | 55-032-1 | | | 55-986 | | | | | 55-991 | |
| 32L/P, 32LR, 32R, 32RLC, 21LCN, MONDO | | | | | | | | | | |
| 3/8-24 LHF | | | | | | | | | | |
| 122L,123L, 225L, 225LD, 225R, 225RD, 225RJ, 227LD, 232L, 232R, 322L, 322R, 324LX, 325LX, 325R, 326LS, 326LX, 335LS | | | | | | | | | | |
| 10mm x 1.25 LHF | 55-987 | 55-984 | 55-983 | 55-985 | 55-140-0 | 55-294* | 55-989 | 55-990 | | 55-992 |
| 32R (1986 & older) | | | | | | | | | | |
| 10mm x 1.5 LHM | | | | | | | | | | |
| 21LCN, 23LC, 322C, 325C | | | | | | | | | | |
| 5/16 x 24 RHF | | | | | | | | | | |
| 120LC | | | | | | | | | | |
| 12mm x 1.75, RHF | | | | | | | | | | |
| **Ideal** | | | | | | | | | | |
| S20 | | | | | | | | | | |
| 10mm x 1.25 LHF | 55-987 | 55-984 | 55-983 | 55-985 | 55-140-0 | 55-294* | 55-989 | 55-990 | | 55-992 |
| S25, SX230, SX260 | | | | | | | | | | |
| 8mm x 1.25 LHF | | | | | 55-140-0 | 55-294* | 55-989 | 55-990 | | |
| **Ikra** | | | | | | | | | | |
| BT1045 | | | | | | | | | | |
| 8mm x 1.25 LHM | 55-987 | 55-984 | 55-983 | 55-985 | 55-140-0 | 55-294* | 55-989 | 55-990 | | 55-992 |
| **Iseki** | | | | | | | | | | |
| DYB201, DYB202 | | | | | | | | | | |
| 7mm x 1.0 LHM | 55-987 | 55-984 | | 55-985 | 55-140-0 | 55-294* | 55-989 | 55-990 | | 55-992 |
| DYB251, DYB252, DYB254 | | | | | | | | | | |
| 8mm x 1.25 LHM | 55-987 | 55-984 | 55-983 | 55-985 | 55-140-0 | 55-294* | 55-989 | 55-990 | | 55-992 |
| DYB351, DYB354, DYB453 | | | | | | | | | | |
| 10mm x 1.25 LHM | | | | | 55-140-0 | 55-294* | 55-989 | 55-990 | | |
| **IDC** | | | | | | | | | | |
| 540, 540-1, 540-2, 540 SUPREME, 580, 580-1, 580-2, 580 SUPREME | | | | | | | | | | |
| 10mm x 1.25 LHF | 55-987 | 55-984 | 55-983 | 55-985 | 55-140-0 | 55-294* | 55-989 | 55-990 | | 55-992 |

T

**WARNING**: Improperly installed trimmer attachments can create a risk of personal injury to the trimmer operator or bystanders. Improperly installed attachments can work loose and be thrown off the trimmer. In some cases, mounting bolts may not securely fit all intended trimmer models, for example: there may be a difference in the size of the bolt's counterbore versus the counterbore on the trimmer. Do not install any attachment on any trimmer without a solid, secure fit of all parts.
**ATTENTION DEALERS**: Install heads only on trimmers that are within the size range (cc displacement or horsepower) for which the head is intended. Performance will suffer if the type of head and the size of trimmer are not properly matched. Read and follow all of the Important Safety Information.

**F** = Female • **M** = Male • **LH** = Left-hand • **RH** = Right-hand • **CB** = Counterbore

*order 55-265 for 450 LH Speed Feed

# Trimmer Head Application Chart

| Model Numbers & Mounting Bolts | HD Commercial Bump & Feed | HD Commercial Bump & Feed (Eyelet Load) | Bump & Feed | Bump & Feed (Eyelet Load) | 4" Heavy-Duty Magnum Gator-head™ | 2–Line Speed Feed 3.75" LH | Lightning Load™ Bump & Feed 4.25" LH | Lightning Load Bump & Feed 5.00" LH | Cool Head Bump & Feed 4.50" RH | Cool Head Bump & Feed 6.00" LH |
|---|---|---|---|---|---|---|---|---|---|---|
| **IDC** | | | | | | | | | | |
| 120, 130B, 364, 364-1, 365, 385, 500, 500 SUPREME, 500-1, 500-2, 520, 520-1, 530, 530B, 520-2 | | | | | | | | | | |
| 5/16 x 18 RHM | | | | | | | | | | |
| **John Deere** | | | | | | | | | | |
| 21C, 80G, 82, 82G, 83G, 85, 100G, 110G, 120G, 200G, 210G, 220G, 250G | | | | | | | | | | |
| 3/8-24 RHF | 55-032-1 | | | 55-986 | | | | | 55-991 | |
| 90G, 220G, 250G, 300G, 350G, 450G, 240G, 260G, 21S, 24S, 25S, 30S, 38B, 38R, 60G, 240G, 250G, 260G, 300G, 305, 350G, 360G, 380G, 385, 450G, 460G, T105S, XT105/SB, XT120, XT140/B/SB, XT170/B, XT250B | | | | | | | | | | |
| 10mm x 1.25 LHF | 55-987 | 55-984 | 55-983 | 55-985 | 55-140-0 | 55-294* | 55-989 | 55-990 | | 55-992 |
| BC1600, S1400 | | | | | | | | | | |
| 8mm x 1.25 LHF | | | | | 55-140-0 | 55-294* | 55-989 | 55-990 | | |
| C1200 | | | | | | | | | | |
| | | | | | | | | | | |
| **Jonsered** | | | | | | | | | | |
| BP40, BP40 COMBI, BP2040, BR400, BR420, BR450, BR460, BR480, GT21L, GT22L, GT24L, GR26 COMBI, GR26D, GR26L, GR32L GR32L CAT, GR2026CL, GR2026D, GR2032, GR2032D, GR3032L, GR2036; LR SERIES: 200, 220, 220B, 220L, 260, 260B, 260L, 300, 320, 400, 420, 450, 460, TIGER 40, LR200, LR220B, LR260, LR320, LR300, BR400, BR500, LR400, LR420, LR450, LR460, GR32L, GR32LCAT, BP40, BP40 COMBI, BP2040, BR400, BR420, BR450, BR460, BR480, GT21L, GT22L, GT24L, GR26 COMBI, GR26D, GR26L, GR32L GR32L CAT, BIG RED 400, LIT/RID30 | | | | | | | | | | |
| 8mm x 1.25 LHM | 55-987 | 55-984 | 55-983 | 55-985 | 55-140-0 | 55-294* | 55-989 | 55-990 | | 55-992 |
| CR41, RS38, RS40, RS45, RS51, GR36, GR51 | | | | | | | | | | |
| 8mm x 1.25 RHF | | | | | | | | | | |
| RS38ANCIEN, RS38 older | | | | | | | | | | |
| 10mm x 1.0 LHF | 55-987 | | 55-038-1 | 55-985 | 55-140-0 | 55-294* | 55-989 | 55-990 | | |
| RS44, GR44, GR41, J40D, KQ20/30 (EURO) | | | | | | | | | | |
| 10mm x 1.25 LHF | 55-987 | 55-984 | 55-983 | 55-985 | 55-140-0 | 55-294* | 55-989 | 55-990 | | 55-992 |
| GT25L, GT26, GT26L | | | | | | | | | | |
| 3/8-24 RHF | 55-032-1 | | | 55-986 | | | | | 55-991 | |
| RS51PRO, RS40/45/30, GR50/3636CAT/32D, GR32DCAT, R45, RS38 NOUVEAU, RS38 newer | | | | | | | | | | |
| 12mm x 1.75 LHF | | | | | | | | | | |
| GT32 | | | | | | | | | | |
| 3/8-24 LHF | | | | | | | | | | |
| **Kaaz** | | | | | | | | | | |
| BS400, BX440, BX540, G3CR, G4CR, J40FD, J400G, J400GX, J480, J4BD, JQ40, JQ50, K10, K40D, KQ30, KQ30B, KT10, KT30R, RQ30, RQ30B, K40D, RQ30B, T50, T240, U10, V15, V18, V25, V35, V40, VX221/251C/360S/360/440, RX350/351L, VRX360/440/540, JLQT200, JQ, JQ40/50, T240, T30, T50, U10, V15, V18, V25, V35, V40, VRP201, VRP301, VRP400, VRS201, VRS301, VRS400, VRX360, VRX440, VRX540, VS300, VS400, JQG4K, JQT200, T170, T240, 410, J400GX, RQ30, T3, VPS301, VRX430 | | | | | | | | | | |
| 10mm x 1.25 LHF | 55-987 | 55-984 | 55-983 | 55-985 | 55-140-0 | 55-294* | 55-989 | 55-990 | | 55-992 |
| V20 | | | | | | | | | | |
| 7mm x 1.0 LHM | 55-987 | 55-984 | | 55-985 | 55-140-0 | 55-294* | 55-989 | 55-990 | | 55-992 |
| G3CR, G4CR, K20, KLQ20, KQ20, KQ30B, KQ40, KQP20B, KT15R, KT17R, KT18R, RQ20, RQP20, V20, VP15, VP20, VRS200, VRS300, VS220, LPQ20B, VP200, VS250, VX23, VX260, VS250, VS230, VX260, VSP250 | | | | | | | | | | |
| 8mm x 1.25 LHF | | | | | 55-140-0 | 55-294* | 55-989 | 55-990 | | |

T

# Trimmer Head Application Chart

| Model Numbers & Mounting Bolts | HD Commercial Bump & Feed | HD Commercial Bump & Feed (Eyelet Load) | Bump & Feed | Bump & Feed (Eyelet Load) | 4" Heavy-Duty Magnum Gator-head™ | 2–Line Speed Feed 3.75" LH | Lightning Load™ Bump & Feed 4.25" LH | Lightning Load Bump & Feed 5.00" LH | Cool Head Bump & Feed 4.50" RH | Cool Head Bump & Feed 6.00" LH |
|---|---|---|---|---|---|---|---|---|---|---|
| **Kawasaki** | | | | | | | | | | |
| KBL23A, KBL26A | | | | | | | | | | |
| 8mm x 1.25 LHM | 55-987 | 55-984 | 55-983 | 55-985 | 55-140-0 | 55-294* | 55-989 | 55-990 | | 55-992 |
| **Kubota** | | | | | | | | | | |
| D200(23cc), DS300(31cc), D100, D210, D300 | | | | | | | | | | |
| 8mm x 1.25 LHF | | | | | 55-140-0 | 55-294* | 55-989 | 55-990 | | |
| BS310, D110, F410 | | | | | | | | | | |
| 10mm x 1.25 LHM | | | | | 55-140-0 | 55-294* | 55-989 | 55-990 | | |
| F300, F400 | | | | | | | | | | |
| 10mm x 1.5 LHF | | | | | | | | | | |
| K410 | | | | | | | | | | |
| 10mm x 1.25 LHF | 55-987 | 55-984 | 55-983 | 55-985 | 55-140-0 | 55-294* | 55-989 | 55-990 | | 55-992 |
| **Lawn Boy** | | | | | | | | | | |
| 1460, 1480, 51606, 51607M, 51608, 51650, 51655, 51660, 51665, 61653, 51908, 51909, 51918, 51919, 1480/CC, 61653, 61953 | | | | | | | | | | |
| 10mm x 1.25 LHF | 55-987 | 55-984 | 55-983 | 55-985 | 55-140-0 | 55-294* | 55-989 | 55-990 | | 55-992 |
| 1100, 1150, 1300, 1330, 1360, 1400, 3100, 3130, 3160, 51620, 51638, 51903, 51906, 51911, 51916 SS1, SS11, 51920, 51926, 61620, 61638, | | | | | | | | | | |
| | | | | | | | | | | |
| **Makita** | | | | | | | | | | |
| EM4251, RB251, RBC221, RBC230, RBC251, RBC252, RBC255, RBC260, RBC261, EBC281, EBC310, RBC311, RBC321, RST250, RBC410, RBK410 | | | | | | | | | | |
| 8mm x 1.25 LHM | 55-987 | 55-984 | 55-983 | 55-985 | 55-140-0 | 55-294* | 55-989 | 55-990 | | 55-992 |
| DBC3300, DBC4000, DBC4000C | | | | | | | | | | |
| 12mm x 1.5 LHF | | | | | | | | | | |
| **Marunaka** | | | | | | | | | | |
| T240DX/F53L, T240DX/F53, BC480DX, G13K, G3, G5, G8K | | | | | | | | | | |
| 10mm x 1.25 LHM | | | | | 55-140-0 | 55-294* | 55-989 | 55-990 | | |
| TM33DX/F43L, TM33DX/F43, T200DX/F43L, T200DX/F43, TM33JX/F404L, T200JX/F404L, BC33DX, BC400DX, BK404FX | | | | | | | | | | |
| 10mm x 1.5 LHF | | | | | | | | | | |
| TM21DX/F3L, TM24DX/F3L, BC181DX, DC200DX, BC240DX, BC180DX | | | | | | | | | | |
| 8mm x 1.25 LHF | | | | | 55-140-0 | 55-294* | 55-989 | 55-990 | | |
| BT181DX | | | | | | | | | | |
| 8mm x 1.25 RHF | | | | | | | | | | |
| **Maruyama** | | | | | | | | | | |
| BS184, BC184C, BC200, BC201, BC230, BC241, BC260, BC260H, BC310, BC320, BC320H, BC326, BC340DL, BC402, BC420H, BC500, BC500H, BC2300, BC2600, BC3200, BC4200H, BCGX22, BCGX31, BCL2250, BCL2250C, MC-5, NC8 | | | | | | | | | | |
| 8mm x 1.25 LHM | 55-987 | 55-984 | 55-983 | 55-985 | 55-140-0 | 55-294* | 55-989 | 55-990 | | 55-992 |

**WARNING**: Improperly installed trimmer attachments can create a risk of personal injury to the trimmer operator or bystanders. Improperly installed attachments can work loose and be thrown off the trimmer. In some cases, mounting bolts may not securely fit all intended trimmer models, for example: there may be a difference in the size of the bolt's counterbore versus the counterbore on the trimmer. Do not install any attachment on any trimmer without a solid, secure fit of all parts.
**ATTENTION DEALERS**: Install heads only on trimmers that are within the size range (cc displacement or horsepower) for which the head is intended. Performance will suffer if the type of head and the size of trimmer are not properly matched. Read and follow all of the Important Safety Information.

**F** = Female • **M** = Male • **LH** = Left-hand • **RH** = Right-hand • **CB** = Counterbore

*order 55-265 for 450 LH Speed Feed

# Trimmer Head Application Chart

| Model Numbers & Mounting Bolts | HD Commercial Bump & Feed | HD Commercial Bump & Feed (Eyelet Load) | Bump & Feed | Bump & Feed (Eyelet Load) | 4" Heavy-Duty Magnum Gator-head™ | 2–Line Speed Feed 3.75" LH | Lightning Load™ Bump & Feed 4.25" LH | Lightning Load Bump & Feed 5.00" LH | Cool Head Bump & Feed 4.50" RH | Cool Head Bump & Feed 6.00" LH |
|---|---|---|---|---|---|---|---|---|---|---|
| **Maruyama** | | | | | | | | | | |
| BC430DWM, BC440DWM, 32, 35, BC500 | | | | | | | | | | |
| 10mm x 1.25 LHM | | | | | 55-140-0 | 55-294* | 55-989 | 55-990 | | |
| BC220DL, BC221DL | | | | | | | | | | |
| 7mm x 1.0 LHM | 55-987 | 55-984 | | 55-985 | 55-140-0 | 55-294* | 55-989 | 55-990 | | 55-992 |
| BC184C, BC200C, BC201C, BC260C, BC260CB | | | | | | | | | | |
| 8mm x 1.25 RHM | | | | | | | | | | |
| BT17, BT220, BC200C, BC260C | | | | | | | | | | |
| 8mm x 1.25 RHF | | | | | | | | | | |
| 23 | | | | | | | | | | |
| 10mm x 1.5 LHF | | | | | | | | | | |
| BC184C, BC200C, BC260C | | | | | | | | | | |
| 10mm x 1.25 LHF | 55-987 | 55-984 | 55-983 | 55-985 | 55-140-0 | 55-294* | 55-989 | 55-990 | | 55-992 |
| **McCulloch** | | | | | | | | | | |
| 80A, 80S, 80-SL, 80-SX, 85-SL;MAC100A, MAC 85A, MAC 85S, MAC 85SX, MAC 2825, MAC 2827; PRO MAC SERIES: I-SX, II, II SUP, IV HD, 2320L, 2035, 2045, 138SJ, 138SL, EB SERIES: I, I-SL, I-SX, II, II-SL, II-SX, III-SL, III-SX, EB285BC, EB287BC; MAC SERIES: 60, 60A, 60S, 60SX, 65, 65SL, 70, 70A, 75, 80, SEB I-SX SPECIAL, SEB II-S, SEB III-S, SILVER EAGLE 28, SILVER EAGLE 28C, SILVER EAGLE 32BC, SUPER EBI-S, TITAN 2100, TITAN 2200, 2510; ROADRUNNER, ROADRUNNER II, ROADRUNNER III, ROADRUNNER SL | | | | | | | | | | |
| 3/8-24 RHF | 55-032-1 | | | 55-986 | | | | | 55-991 | |
| TITAN SERIES 2130/2500/2500AV/2560/2565, /2300/2300AV, All Proscape Models EB SERIES: 32BCS, 35L, 280, 282, 285BCS, 297BCS, 325BC, 327BC, 2815, 2816, 2817, 2818, 2845, 3225, 3225HD, 3227, 3227HD, EB III, EB IV, EB IV SL; MAC SESRIES:38AV, 85A, 90, 90A, 95, 95A, 99A, 99-SL, 100A, 100AHD, 100HD, 3225, 3227, 3225HD, 3227HD; PRO MAC SERIES: III, III SUP, IV SUP, 4HD 2335J. 2635B, 2635J, 3335L, SILVER EAGLE 32 BCS; SUPMAC 100A; TITAN SERIES: 2300, 2300AV, 2310, 2360, 2400, 2500, 2500AV, 2560AV, 2565AV, 3000, 3900, 4335B; PROSCAPER SERIES: I-S, II, IIHD, III, IV, V, PS1, PS2, PS3, PS4, PS5, 28S, 32HD, 32HDS; SEB IV, SILVER EAGLE 32 BC DLX, 85A, 85S/SL/SX, EB35L, EB3SX, SEB4 | | | | | | | | | | |
| 10mm x 1.25 LHF | 55-987 | 55-984 | 55-983 | 55-985 | 55-140-0 | | | | | 55-992 |
| 60SX, 65, 65SL, 80SX, 80SL, EB280, EB285, EBISX, EB282, EB287, Mac 15RT, Mac 2815, Mac 2816, Mac 2817, Mac 2818, Road Runner, Road Runner II, Road Runner III, Pro Mac I, SE28, SE28c, Titan 2000, Titan 2010, Titan 2100, Titan 2200, MAC 15RT/2815/2816/2817/2818, PROMAC1, SE28, SE28C, TITAN2000/2010/2100/2200, ALL ROAD RUNNER MODELS Extended spindle | | | | | | | | | | |
| | | 55-095-1 | 55-981 | | | | | | | |
| MAC 57, MAC 90, MAC 95, MAC 100A, MAC 32, MAC37 | | | | | | | | | | |
| 10mm x 1.25 LHM | | | | | 55-140-0 | 55-294* | 55-989 | 55-990 | | |
| SUPERMAC26, MAC30A/30AV, PRATER30, EUROPA92/35A, EUROPA, MS24/52, MS52, PROMAC38AV, BP38AV, WINDSORKIT26, VERSAILLE38, BP26AV, BP35AV | | | | | | | | | | |
| 10mm x 1.5 LHM | | | | | | | | | | |
| MAC22/23/30A, SUPERMAC30AV, MS33, DELTA, 38AV, MS33, MS40, BP30AV, TD2400/3300/4000 | | | | | | | | | | |
| 8mm x 1.25 LHM | 55-987 | 55-984 | 55-983 | 55-985 | 55-140-0 | 55-294* | 55-989 | 55-990 | | 55-992 |
| MAC17, MAC25 | | | | | | | | | | |
| 8mm x 1.25 RHF | | | | | | | | | | |
| SERIES 10 BRUSHCUTTER | | | | | | | | | | |
| 3/8-24 LHF | | | | | | | | | | |
| **Mitsubishi** | | | | | | | | | | |
| K20M-T12, MB160A, MB180, MB200, MB6A, MV130 | | | | | | | | | | |
| 8mm x 1.25 LHF | | | | | 55-140-0 | 55-294* | 55-989 | 55-990 | | |

T

# Trimmer Head Application Chart

| Model Numbers & Mounting Bolts | HD Commercial Bump & Feed | HD Commercial Bump & Feed (Eyelet Load) | Bump & Feed | Bump & Feed (Eyelet Load) | 4" Heavy-Duty Magnum Gator-head™ | 2–Line Speed Feed 3.75" LH | Lightning Load™ Bump & Feed 4.25" LH | Lightning Load Bump & Feed 5.00" LH | Cool Head Bump & Feed 4.50" RH | Cool Head Bump & Feed 6.00" LH |
|---|---|---|---|---|---|---|---|---|---|---|
| **Mountfield** | | | | | | | | | | |
| 16, 18, 22, 23, 24, 26, 33, 40, 43 | | | | | | | | | | |
| 8mm x 1.25 LHM | 55-987 | 55-984 | 55-983 | 55-985 | 55-140-0 | 55-294* | 55-989 | 55-990 | | 55-992 |
| 31, 37 | | | | | | | | | | |
| 10mm x 1.25 LHM | | | | | 55-140-0 | 55-294* | 55-989 | 55-990 | | |
| **Nikkari** | | | | | | | | | | |
| 22, 24, 37, SDX20, RK521, TDK518, | | | | | | | | | | |
| 8mm x 1.25 LHM | 55-987 | 55-984 | 55-983 | 55-985 | 55-140-0 | 55-294* | 55-989 | 55-990 | | 55-992 |
| 33, PNB522, TX(B)508, NBA524, SXD40, FSK514 | | | | | | | | | | |
| 10mm x 1.25 LHM | | | | | 55-140-0 | 55-294* | 55-989 | 55-990 | | |
| **MTD Pro** | | | | | | | | | | |
| ST23, ST26, ST35 | | | | | | | | | | |
| 10mm x 1.25 LHF | 55-987 | 55-984 | 55-983 | 55-985 | 55-140-0 | 55-294* | 55-989 | 55-990 | | 55-992 |
| **Olympyk** | | | | | | | | | | |
| OL8740BAV, OL8742BAV, OL8750PRO, OL8753BAV, OL88510BAV, PRO-38, OL8735LAV, 727S, 727T, 733S, 733T, 740S, 740T, 433BP, B200, B220, B260L, B220L, B220S, B260, B300, B320, B400, B420, B450, B460, OL8260BAV, OL8260DAV, OL8260LAV, OL8260TA, OL8350BAV, OL8350LAV, OL8450BP, OL8460BAV, OL8725BAV, OL8725LAV, OL8726TA, OL8735BAV, | | | | | | | | | | |
| 8mm x 1.25 LHM | 55-987 | 55-984 | 55-983 | 55-985 | 55-140-0 | 55-294* | 55-989 | 55-990 | | 55-992 |
| 900, 2620 | | | | | | | | | | |
| 10mm x 1.5 LHF | | | | | | | | | | |
| 440, 433BP, 200, 220, 260, 300, 400, 310, 410, 8420, 727 D/C/S/T, 733 S/T, 740 S/T, 433BP, 440BP, 750 S/T | | | | | | | | | | |
| 8mm x 1.25 LHF | | | | | 55-140-0 | 55-294* | 55-989 | 55-990 | | |
| **Paice Setter** | | | | | | | | | | |
| K20, KQ, KLQ, JQ | | | | | | | | | | |
| 8mm x 1.25 LHF | | | | | 55-140-0 | | | | | |
| J40D, KQ30 | | | | | | | | | | |
| 10mm x 1.25 LHF | 55-987 | 55-984 | 55-983 | 55-985 | 55-140-0 | 55-294* | 55-989 | 55-990 | | 55-992 |
| **Paramount** | | | | | | | | | | |
| PLT2651, PLT2857, PT140, PT140-2, PT145, PT160, PT162, PT162-01, PT1400, PT1400-00, SK140-02, SK145, SK160-02, SK165 | | | | | | | | | | |
| 3/8-24 RHF | 55-032-1 | | | 55-986 | | | | | 55-991 | |
| PLT2145, PLT2248 | | | | | | | | | | |
| 5/16 x 24, RHF | | | | | | | | | | |
| **Pioneer/Partner** | | | | | | | | | | |
| B180, B250, Spartan | | | | | | | | | | |
| 8mm x 1.25 LHM | 55-987 | 55-984 | 55-983 | 55-985 | 55-140-0 | 55-294* | 55-989 | 55-990 | | 55-992 |

**WARNING**: Improperly installed trimmer attachments can create a risk of personal injury to the trimmer operator or bystanders. Improperly installed attachments can work loose and be thrown off the trimmer. In some cases, mounting bolts may not securely fit all intended trimmer models, for example: there may be a difference in the size of the bolt's counterbore versus the counterbore on the trimmer. Do not install any attachment on any trimmer without a solid, secure fit of all parts.
**ATTENTION DEALERS**: Install heads only on trimmers that are within the size range (cc displacement or horsepower) for which the head is intended. Performance will suffer if the type of head and the size of trimmer are not properly matched. Read and follow all of the Important Safety Information.

**F** = Female • **M** = Male • **LH** = Left-hand • **RH** = Right-hand • **CB** = Counterbore

*order 55-265 for 450 LH Speed Feed

# Trimmer Head Application Chart

| Model Numbers & Mounting Bolts | HD Commercial Bump & Feed | HD Commercial Bump & Feed (Eyelet Load) | Bump & Feed | Bump & Feed (Eyelet Load) | 4" Heavy-Duty Magnum Gator-head™ | 2–Line Speed Feed 3.75" LH | Lightning Load™ Bump & Feed 4.25" LH | Lightning Load Bump & Feed 5.00" LH | Cool Head Bump & Feed 4.50" RH | Cool Head Bump & Feed 6.00" LH |
|---|---|---|---|---|---|---|---|---|---|---|
| **Pioneer/Partner** | | | | | | | | | | |
| F15, F16, S16, S24, SF24, B25SCC, S33, S41, S51 | | | | | | | | | | |
| 8mm x 1.25 LHF | | | | | 55-140-0 | 55-294* | 55-989 | 55-990 | | |
| B380, B440 | | | | | | | | | | |
| 12mm x 1.75 LHF | | | | | | | | | | |
| 200, 205, B250C/V, T250, S33, S41, S51 | | | | | | | | | | |
| 10mm x 1.25 LHF | 55-987 | 55-984 | 55-983 | 55-985 | 55-140-0 | 55-294* | 55-989 | 55-990 | | 55-992 |
| B180, B370, B450 | | | | | | | | | | |
| 12mm x 1.75 LHF | | | | | | | | | | |
| B400 | | | | | | | | | | |
| 10mm x 1.0 LHF | 55-987 | | 55-038-1 | 55-985 | 55-140-0 | | | | | |
| 200, 205, B250C, B250V, T250 (EURO) | | | | | | | | | | |
| 8mm x 1.25 LHM | 55-987 | 55-984 | 55-983 | 55-985 | 55-140-0 | 55-294* | 55-989 | 55-990 | | 55-992 |
| **Poulan Pro/Poulan** | | | | | | | | | | |
| 770, PPC22, PPC25, PPC25E, PPC32; PRO SERIES: 111, 112, 114, 113, 115, 117, 559, 609, 900, 1350, 1500, 2400, 2500, 2600, 2610, 2620, 2615, 2700, PRO114, PRO117; YARD PRO SERIES: 115, 120A, 130A, 145, 160, 200 | | | | | | | | | | |
| 3/8-24 RHF | 55-032-1 | | | 55-986 | | | | | 55-991 | |
| 150, 200, 800, 900, 2620, 2820 | | | | | | | | | | |
| 10mm x 1.5 LHF | | | | | | | | | | |
| 165, 175, 185, 200, 195, 800, 900, 2620, 2820 | | | | | | | | | | |
| 3/8-24 LHF | | | | | | | | | | |
| **Red Max** | | | | | | | | | | |
| BC220DL, BC221DL, BC300DL, BC2300DL, BK235FL, BK345FL, BK435FL, BK530DL, BC17, BC23, BC32, BC240DL | | | | | | | | | | |
| 7mm x 1.0 LHM | 55-987 | 55-984 | | 55-985 | 55-140-0 | 55-294* | 55-989 | 55-990 | | 55-992 |
| BC260DL, BC262DL, BC261DL, BC340DL, BC341DL, BC342DL, BC430DWM, BC440DWM, BC2600DL, BK 346FL/245FLK/436FL, BC 254A/260DM/260DMU/340DWM/340FW/431DWM, BCD20, BCF01G2KC, BC 3400DW/4400DW, BCX2600DS, BCZ 2500S/2500SU/2500SW/2500BC | | | | | | | | | | |
| 8mm x 1.25 LHM | 55-987 | 55-984 | 55-983 | 55-985 | 55-140-0 | 55-294* | 55-989 | 55-990 | | 55-992 |
| BC430, BC440, BC441DWM, BC442/531/2DWM | | | | | | | | | | |
| 10mm x 1.25 LHM | | | | | 55-140-0 | 55-294* | 55-989 | 55-990 | | |
| BT17, BT25, BT20, BT20, BT2201F | | | | | | | | | | |
| 8mm x 1.25 RHF | | | | | | | | | | |
| BC2000DL, BC200BT2000, BT2001DL | | | | | | | | | | |
| 10mm x 1.25 LHF | 55-987 | 55-984 | 55-983 | 55-985 | 55-140-0 | 55-294* | 55-989 | 55-990 | | 55-992 |
| BC431FWM, BC531DWM, FBC22, FBC26 | | | | | | | | | | |
| 10mm x 1.25 LHM | | | | | 55-140-0 | 55-294* | 55-989 | 55-990 | | |
| **Robin** | | | | | | | | | | |
| NB23, NBF171, NFB251, NB26 | | | | | | | | | | |
| 10mm x 1.0 LHCB | | 55-984 | 55-039-1 | | | 55-294* | 55-989 | 55-990 | | |

T

# Trimmer Head Application Chart

| Model Numbers & Mounting Bolts | HD Commercial Bump & Feed | HD Commercial Bump & Feed (Eyelet Load) | Bump & Feed | Bump & Feed (Eyelet Load) | 4" Heavy-Duty Magnum Gator-head™ | 2–Line Speed Feed 3.75" LH | Lightning Load™ Bump & Feed 4.25" LH | Lightning Load Bump & Feed 5.00" LH | Cool Head Bump & Feed 4.50" RH | Cool Head Bump & Feed 6.00" LH |
|---|---|---|---|---|---|---|---|---|---|---|
| **Robin** | | | | | | | | | | |
| NB02, NB02T, NB03, NB02-3A, NB02TM NB03M NB16, NB16F, NB16S, NB16T, NB20T, NB26, NB27, NB27AU, NB31, NB31-AU, NB211, NB211S, NB223, NB231, NB253, NB281, NB281-AU, TNB211/231, NBF16F, NBT415, MB26AV, MB31AV, NB16T, NB23, NB31, NB30K, NB31, NBK411, NBT20T, NBT27, NB27AU, NB31AU, NB16F, NB23F/S, NBF231, NBF251, NBF171, NBANB23TX | | | | | | | | | | |
| 8mm x 1.25 LHF | | | | | 55-140-0 | 55-294* | 55-989 | 55-990 | | |
| NB04, NB04-2D, NB30, NB50, NB50L, NB321, NB321-AU, NB351, NB411, NB415, NB2001, NBKT415 | | | | | | | | | | |
| 10mm x 1.0 LHF | 55-987 | | 55-038-1 | 55-985 | 55-140-0 | 55-294* | 55-989 | 55-990 | | |
| NB23TX, NB252, NBF251-2 | | | | | | | | | | |
| 8mm x 1.25 RHF | | | | | | | | | | |
| NBR-30(K) 40, NB351(Z) | | | | | | | | | | |
| 8mm x 1.25 LHM | 55-987 | 55-984 | 55-983 | 55-985 | 55-140-0 | 55-294* | 55-989 | 55-990 | | 55-992 |
| **Ryobi/Ryan/IDC** | | | | | | | | | | |
| 120, 130, 260, 261, 262, 263, 264, 264-1, 264-2, 264-3, 265, 265-1, 265-P, 270, 280, 364, 364-1, 365, 500, 700, 700R | | | | | | | | | | |
| | | | | | | | | | | |
| 274, 274-2, 274-3, 275, 275-1, 275-P.520, 520-1, 520-2, 720R, 760R, 764R, 770R, 960R | | | | | | | | | | |
| 3/8-24 RHF | 55-032-1 | | | 55-986 | | | | | 55-991 | |
| 284, 284-1, 284-2, 284-3, 285, 285-1, 285-P, 540, 540-1, 540-2, 580, 580-1, 580-2, 740R, 780R, 7890R, 865R, 885R, 990R, 740R-1, 750R, 775R, 780R-1, 780RB, 780RE, 840R | | | | | | | | | | |
| 10mm x 1.25 LHF | 55-987 | 55-984 | 55-983 | 55-985 | 55-140-0 | 55-294* | 55-989 | 55-990 | | 55-992 |
| 790R BEFORE 1996 | | | | | | | | | | |
| 10mm x 1.5 LHM | | | | | | | | | | |
| RD180K, REK285BP, 108KS/S, 3318 | | | | | | | | | | |
| 8mm x 1.25 LHM | 55-987 | 55-984 | 55-983 | 55-985 | 55-140-0 | 55-294* | 55-989 | 55-990 | | 55-992 |
| RD5224, RD5225, RSB2801, RSH1100 | | | | | | | | | | |
| 10mm x 1.25 LHM | | | | | 55-140-0 | 55-294* | 55-989 | 55-990 | | |
| RD260 | | | | | | | | | | |
| 10mm x 1.5 LHF | | | | | | | | | | |
| RD3318, RD1605, RD2414, RD3818, RD3330, RD430, RD520 | | | | | | | | | | |
| 8mm x 1.25 LHF | | | | | 55-140-0 | 55-294* | 55-989 | 55-990 | | |
| ALL CORDED ELECTRIC MODELS | | | | | | | | | | |
| | | | | | | | | | 55-413 | |
| **Sabo** | | | | | | | | | | |
| 23-700 | | | | | | | | | | |
| 7mm x 1.0 LHM | 55-987 | 55-984 | | 55-985 | 55-140-0 | 55-294* | 55-989 | 55-990 | | 55-992 |

**WARNING**: Improperly installed trimmer attachments can create a risk of personal injury to the trimmer operator or bystanders. Improperly installed attachments can work loose and be thrown off the trimmer. In some cases, mounting bolts may not securely fit all intended trimmer models, for example: there may be a difference in the size of the bolt's counterbore versus the counterbore on the trimmer. Do not install any attachment on any trimmer without a solid, secure fit of all parts.
**ATTENTION DEALERS**: Install heads only on trimmers that are within the size range (cc displacement or horsepower) for which the head is intended. Performance will suffer if the type of head and the size of trimmer are not properly matched. Read and follow all of the Important Safety Information.

**F** = Female • **M** = Male • **LH** = Left-hand • **RH** = Right-hand • **CB** = Counterbore

*order 55-265 for 450 LH Speed Feed

# Trimmer Head Application Chart

| Model Numbers & Mounting Bolts | HD Commercial Bump & Feed | HD Commercial Bump & Feed (Eyelet Load) | Bump & Feed | Bump & Feed (Eyelet Load) | 4" Heavy-Duty Magnum Gator-head™ | 2–Line Speed Feed 3.75" LH | Lightning Load™ Bump & Feed 4.25" LH | Lightning Load Bump & Feed 5.00" LH | Cool Head Bump & Feed 4.50" RH | Cool Head Bump & Feed 6.00" LH |
|---|---|---|---|---|---|---|---|---|---|---|
| **Sabo** | | | | | | | | | | |
| 26-1500, 26-1700 | | | | | | | | | | |
| 10mm x 1.25 LHM | | | | | 55-140-0 | 55-294* | 55-989 | 55-990 | | |
| **Sabre** | | | | | | | | | | |
| B25, S25, S25C | | | | | | | | | | |
| 8mm x 1.25 LHM | 55-987 | 55-984 | 55-983 | 55-985 | 55-140-0 | 55-294* | 55-989 | 55-990 | | 55-992 |
| **Sears** | | | | | | | | | | |
| PRO SERIES, 79534, 79541, 79542, 79551, 79552, 79555, 79556, 79561, 79565, 7957, 7958, 7959, 79611, 79612, 79612, 79613, 79614, 79615, 79619, 79621, 7968, 7969, 79717, 79719, 79812, 79813, 79814, 79819, 79532, 79853, 79854, 79855, 79857, 636-79545, 636-7955, 636-79558, 636-796233, 796234M, 796242, 796243 | | | | | | | | | | |
| 10mm x 1.0 LHF | 55-987 | | 55-038-1 | 55-985 | 55-140-0 | 55-294* | 55-989 | 55-990 | | |
| 21851-2816, 9-89658LS, 979551C, 79011, 79500, 79501, 79504, 79522 | | | | | | | | | | |
| 10mm x 1.25 LHF | 55-987 | 55-984 | 55-983 | 55-985 | 55-140-0 | 55-294* | 55-989 | 55-990 | | 55-992 |
| 79606, 79531, 79821, 742110, 742111, 74212, 79823, 74213, 797100, 79711, 79712, 79713, 79715, 79718, 79721, 79726, 79714, 79716, 79725, 79727, 79816 | | | | | | | | | | |
| 3/8-24 RHF | 55-032-1 | | | 55-986 | | | | | 55-991 | |
| 74220, 74224, 74234, 74242, 74244, 74247, 79505, 79530, 79626, 79821 | | | | | | | | | | |
| 3/8-24 LHF | | | | | | | | | | |
| 74131, 79605 | | | | | | | | | | |
| | | | | | | | | | | |
| 49534C | | | | | | | | | | |
| 10mm x 1.25 LHM | | | | | 55-140-0 | 55-294* | 55-989 | 55-990 | | |
| 74110, 74121, 74125 | | | | | | | | | | |
| 8mm x 1.25 LHF | | | | | 55-140-0 | 55-294* | 55-989 | 55-990 | | |
| **Servistar** | | | | | | | | | | |
| 385SSR, 395SSR | | | | | | | | | | |
| 10mm x 1.25 LHF | 55-987 | 55-984 | 55-983 | 55-985 | 55-140-0 | 55-294* | 55-989 | 55-990 | | 55-992 |
| 365SSR, 375SSR | | | | | | | | | | |
| 5/16 x 18 RHM | | | | | | | | | | |
| **Shindaiwa** | | | | | | | | | | |
| LT18, T18, LT20, C20, T20, T20A, T35, T230, T230S, T230XR, C230, DYB201/202/231/232, T23E, T195, T220, T222, T242, T242X, T2510X | | | | | | | | | | |
| 7mm x 1.0 LHM | 55-987 | 55-984 | 55-983 | 55-985 | 55-140-0 | 55-294* | 55-989 | 55-990 | | 55-992 |
| BP-35, BP-45, C-25, C-27, C250, F-20, R-20, R-25, R-35, T-25, T-27, T-250, T-260, T261, T261B, T261XR, T261XB, T-270, T272, T272X, T282, T282X, T300, T3410, T3410X, T-350, YARDWARE 220, VP35, P18, P21, C23 | | | | | | | | | | |
| 8mm x 1.25 LHM | 55-987 | 55-984 | 55-983 | 55-985 | 55-140-0 | 55-294* | 55-989 | 55-990 | | 55-992 |
| B35, BP35, B40, B45, B450, BP45, RC45, C35, T350 | | | | | | | | | | |
| 10mm x 1.25 LHM | | | | | 55-140-0 | 55-294* | 55-989 | 55-990 | | |
| **Shingu** | | | | | | | | | | |
| S20, G1823E, G1823DE, G2523E, G2523DE, PK2325E, PK2326DE, PG3330DD, PK4035DD, PK4845DD, 650, P750, P850 | | | | | | | | | | |
| 8mm x 1.25 LHM | 55-987 | 55-984 | 55-983 | 55-985 | 55-140-0 | 55-294* | 55-989 | 55-990 | | 55-992 |
| 200, 250, 350, S22PNC, S23PNC | | | | | | | | | | |
| 7mm x 1.0 LHM | 55-987 | 55-984 | 55-983 | 55-985 | 55-140-0 | 55-294* | 55-989 | 55-990 | | 55-992 |

T

# Trimmer Head Application Chart

| Model Numbers & Mounting Bolts | HD Commercial Bump & Feed | HD Commercial Bump & Feed (Eyelet Load) | Bump & Feed | Bump & Feed (Eyelet Load) | 4" Heavy-Duty Magnum Gator-head™ | 2–Line Speed Feed 3.75" LH | Lightning Load™ Bump & Feed 4.25" LH | Lightning Load Bump & Feed 5.00" LH | Cool Head Bump & Feed 4.50" RH | Cool Head Bump & Feed 6.00" LH |
|---|---|---|---|---|---|---|---|---|---|---|
| **Shingu** | | | | | | | | | | |
| PK4036DD, PK4846DD | | | | | | | | | | |
| 10mm x 1.5 LHM | | | | | | | | | | |
| **Shingushoko** | | | | | | | | | | |
| 200, 250, 350, K301 | | | | | | | | | | |
| 7mm x 1.0 LHM | 55-987 | 55-984 | 55-983 | 55-985 | 55-140-0 | 55-294* | 55-989 | 55-990 | | 55-992 |
| 600, 650, 700, P750, P850 | | | | | | | | | | |
| 8mm x 1.25 LHM | 55-987 | 55-984 | 55-983 | 55-985 | 55-140-0 | 55-294* | 55-989 | 55-990 | | 55-992 |
| **Singer** | | | | | | | | | | |
| GBC2818 | | | | | | | | | | |
| 8mm x 1.25 LHF | | | | | 55-140-0 | 55-294* | 55-989 | 55-990 | | |
| **Snapper** | | | | | | | | | | |
| 212, 212CST, 213, 213CST, 214, 214 DCST, P212CST, P212LST | | | | | | | | | | |
| 3/8-24 RHF | 55-032-1 | | | 55-986 | | | | | 55-991 | |
| 210SS, 211SS, 211SST, 215ORI, 215SST, 240SS, 240SST, 245SST, 245ORT, 310, 311, 311S, 410, 411SST, 415ORT, 2101SST, PL212LST, 414 SST, 211SST, 212CST, 214DCST, SSTBC, SST2111, SST2401, SST7111, 410, 410SST | | | | | | | | | | |
| 10mm x 1.25 LHF | 55-987 | 55-984 | 55-983 | 55-985 | 55-140-0 | 55-294* | 55-989 | 55-990 | | 55-992 |
| **Solo** | | | | | | | | | | |
| 123, 125, MULTIMOT | | | | | | | | | | |
| 10mm x 1.0 LHF | 55-987 | | 55-038-1 | 55-985 | 55-140-0 | 55-294* | 55-989 | 55-990 | | |
| 014, 100, 130S, 400, S100 & S400, FS136, FS135, 119, 115, 118 | | | | | | | | | | |
| 10mm x 1.25 LHF | 55-987 | 55-984 | 55-983 | 55-985 | 55-140-0 | 55-294* | 55-989 | 55-990 | | 55-992 |
| 130, 120, 122, 124, 126, 135, 140, 200, 300, 400, S200, S300, FS125, S200, S300, SKM124, SKM126, 134, 137, 127, 141, FS126, 128 | | | | | | | | | | |
| 12mm x 1.5 LHF | | | | | | | | | | |
| 9 | | | | | | | | | | |
| 10mm x 1.5 LHM | | | | | | | | | | |
| 21, 127S | | | | | | | | | | |
| 10mm x 1.5 LHF | | | | | | | | | | |
| **Stihl** | | | | | | | | | | |
| FS50, FS50E FS50F, FS51, FS51AVE, FS55, FS55R, FS60, FS61, FS61AE, FS61E, FS65, FS65AVE, FS65AVRE, FS80E, FS80RE, FS86, FS90, FS90AVE, FS91, FS96, FS85R/RT, FS83, FS83R/RT | | | | | | | | | | |
| 8mm x 1.25 LHF | | 55-985 | | | 55-140-0 | 55-294* | 55-989 | 55-990 | | |
| FS66AVRE, FS74, FS74AVE, FS74AVRE, FS76, FS76AVE, FS76AVRE, FS81, FS81AVE, FS81AVRE, FS83, FS83R, FS85R, FS85RT, FS86, FR106, FR108, FS40, FS44, FS44B, FS44J, FSS44R, FS45,FS46, FS48, FS52, FS52AVE, FSAVRE, FS56, FS56AVRE, FS62, FS62AVE, FS62AVRE, FS66, FS66AVE, FS86AVE, FS400, FS86AVRE, FS88, FS96, FS100, FS106, FS106AVE, FS108, FS110, FS120, FS120R,FS130, FS200, FS200R, FS250, FS350, FS450K, FS550, FS550K | | | | | | | | | | |
| 10mm x 1.0 LHF | 55-987 | | 55-038-1 | 55-985 | 55-140-0 | 55-294* | 55-989 | 55-990 | | |

**WARNING**: Improperly installed trimmer attachments can create a risk of personal injury to the trimmer operator or bystanders. Improperly installed attachments can work loose and be thrown off the trimmer. In some cases, mounting bolts may not securely fit all intended trimmer models, for example: there may be a difference in the size of the bolt's counterbore versus the counterbore on the trimmer. Do not install any attachment on any trimmer without a solid, secure fit of all parts.
**ATTENTION DEALERS**: Install heads only on trimmers that are within the size range (cc displacement or horsepower) for which the head is intended. Performance will suffer if the type of head and the size of trimmer are not properly matched. Read and follow all of the Important Safety Information.

**F** = Female • **M** = Male • **LH** = Left-hand • **RH** = Right-hand • **CB** = Counterbore

*order 55-265 for 450 LH Speed Feed

# Trimmer Head Application Chart

| Model Numbers & Mounting Bolts | HD Commercial Bump & Feed | HD Commercial Bump & Feed (Eyelet Load) | Bump & Feed | Bump & Feed (Eyelet Load) | 4" Heavy-Duty Magnum Gator-head™ | 2–Line Speed Feed 3.75" LH | Lightning Load™ Bump & Feed 4.25" LH | Lightning Load Bump & Feed 5.00" LH | Cool Head Bump & Feed 4.50" RH | Cool Head Bump & Feed 6.00" LH |
|---|---|---|---|---|---|---|---|---|---|---|
| **Stihl** | | | | | | | | | | |
| FS45, FS46 | | | | | | | | | | |
| Extended spindle | | | | | | | | | | |
| Older FS curved-shaft trimmers and most FE electric trimmers | | | | | | | | | | |
| Extended spindle | | | | | | | | | | |
| FS08, FS20, FS150, FS151, FS160, FS180, FS200, FS200AVSE, FS202, FS220AV/AVSE, FS280, FS280K, FS340, FS353AV, FS360, FS410AVE, FS420, FS120, FS120R, FS250, FS250R, FS200R, FS350, FS450KFS550 | | | | | | | | | | |
| 12mm x 1.5 LHF | | | | | | | | | | |
| **TAS** | | | | | | | | | | |
| HD180, Parlander, SUM301, SUM7000, TBC23, TBC232, TBC262, TBC265, TBC30, TBC301, TBC322, TBC355, TBC373, TBC422, TBC501 | | | | | | | | | | |
| 8mm x 1.25 LHM | 55-987 | 55-984 | 55-983 | 55-985 | 55-140-0 | 55-294* | 55-989 | 55-990 | | 55-992 |
| QUM2, SUM3 | | | | | | | | | | |
| 10mm x 1.25 LHF | 55-987 | 55-984 | 55-983 | 55-985 | 55-140-0 | 55-294* | 55-989 | 55-990 | | 55-992 |
| TBC23, TBC23F, TBC30, TB16, TB160, TBC202, TBC205, TBC215 | | | | | | | | | | |
| 8mm x 1.25 LHF | | | | | 55-140-0 | 55-294* | 55-989 | 55-990 | | |
| **TMC** | | | | | | | | | | |
| 1800, 2400, 3300, 3350 | | | | | | | | | | |
| 8mm x 1.25 LHM | 55-987 | 55-984 | 55-983 | 55-985 | 55-140-0 | 55-294* | 55-989 | 55-990 | | 55-992 |
| **TML** | | | | | | | | | | |
| 2856 | | | | | | | | | | |
| 8mm x 1.25 LHM | 55-987 | 55-984 | 55-983 | 55-985 | 55-140-0 | 55-294* | 55-989 | 55-990 | | 55-992 |
| **Tanaka** | | | | | | | | | | |
| 218, 220E, 233, 301, 321, AST-210, AST 7000, SUM-301, SUM-321; TBC SERIES: TBC-162, TBC-205, TBC-215, TBC218, TBC-220, TBC-220SS, TBC-232, TBC233, TBC-240, TBC-250, TBC-262, TBC-265, TBC-270PF, TBC-300, TBC301, TBC321 TBC-322, TBC-325, TBC-355, TBC-373, TBC-400, TBC-420PF, TBC-422, TBC-422C, TBC-425, TBC-500, TBC-501, TBC-2100, TBC-2110, TBC-2211, TBC-2510, TBC-2800, TBC-3010, TBC-4500, TBC-4501, TST-218, TST-501, AST7000, TUM220, TBC265SDH, TBC2000/2200, AST250, TUM250, SUM250, SUM500/351, SUM421, SUM301, SUM7000, SUM400, 2000, 265SDH, 300SDH, 355SDH, 422SDH, 500SDH, TBC2000N | | | | | | | | | | |
| 8mm x 1.25 LHM | 55-987 | 55-984 | 55-983 | 55-985 | 55-140-0 | 55-294* | 55-989 | 55-990 | | 55-992 |
| TBC2100, TBC200 | | | | | | | | | | |
| 3/8-24 RHF | 55-032-1 | | | 55-986 | | | | | 55-991 | |
| TBC4000, TBC2110, SUM3 | | | | | | | | | | |
| 10mm x 1.25 LHF | 55-987 | 55-984 | 55-983 | 55-985 | 55-140-0 | 55-294* | 55-989 | 55-990 | | 55-992 |
| AST-5000, AST-7000S. TBC-4000, TBC-4110, TBC-5000 | | | | | | | | | | |
| 8mm x 1.25 RHF | | | | | | | | | | |
| TBC-160, TBC-202, TBC-210, TC-1600, TST218, TBC160, TBC162, TBC202, TBC205, TBC210, TC1600, TBC215, 202 84 MODEL | | | | | | | | | | |
| 8mm x 1.25 LHF | | | | | 55-140-0 | 55-294* | 55-989 | 55-990 | | |
| **Tondu** | | | | | | | | | | |
| S100, S250, 260, 350 | | | | | | | | | | |
| 7mm x 1.0 LHM | 55-987 | 55-984 | | 55-985 | 55-140-0 | 55-294* | 55-989 | 55-990 | | 55-992 |
| PRO850, PRO255, PRO851 | | | | | | | | | | |
| 8mm x 1.25 LHM | 55-987 | 55-984 | 55-983 | 55-985 | 55-140-0 | 55-294* | 55-989 | 55-990 | | 55-992 |

T

# Trimmer Head Application Chart

| Model Numbers & Mounting Bolts | HD Commercial Bump & Feed | HD Commercial Bump & Feed (Eyelet Load) | Bump & Feed | Bump & Feed (Eyelet Load) | 4" Heavy-Duty Magnum Gator-head™ | 2–Line Speed Feed 3.75" LH | Lightning Load™ Bump & Feed 4.25" LH | Lightning Load Bump & Feed 5.00" LH | Cool Head Bump & Feed 4.50" RH | Cool Head Bump & Feed 6.00" LH |
|---|---|---|---|---|---|---|---|---|---|---|
| **Toro** | | | | | | | | | | |
| 1000, 2000, 30900, 30901, 30920, 51628, 51641, 51645, 51650, 51660, 51918, CL700, CL2100, CL30900, CL30901, CL30920, TC300, TC350, TC400, TC600, TC650, TC700, TC800, TC1000, TC2000, TC2100, TC3000, TC3100, TC3500, TC4000, TC5000 | | | | | | | | | | |
| 10mm x 1.25 LHF | 55-987 | 55-984 | 55-983 | 55-985 | 55-140-0 | 55-294* | 55-989 | 55-990 | | 55-992 |
| TC1000, TC2000 | | | | | | | | | | |
| 3/8-24 RHF | 55-032-1 | | | 55-986 | | | | | 55-991 | |
| 51903, 51904, 51907, 51906, 51911, 51912, 51916, 51917, 51920, 51921, 51926, 51927, 51450, 51620, 51638 | | | | | | | | | | |
| | | | | | | | | | | |
| **Turf Power** | | | | | | | | | | |
| 740TP, 780TP | | | | | | | | | | |
| 10mm x 1.25 LHF | 55-987 | 55-984 | 55-983 | 55-985 | 55-140-0 | 55-294* | 55-989 | 55-990 | | 55-992 |
| 700TP, 720TP, 764TP | | | | | | | | | | |
| | | | | | | | | | | |
| **Weedeater** | | | | | | | | | | |
| 650, 657, 670, 707, 978, 979, 3500, XR95 | | | | | | | | | | |
| 7/16-20 RHF | | | | | | | | | | |
| 609, 1000, GTI19/T, XR90/95/100/105/125/200, YP140/160/200, YARDPRO 200, PRO SERIES 100, 105, 150, 195, 200, YP130, AYP140 | | | | | | | | | | |
| 10mm x 1.5 LHF | | | | | | | | | | |
| 115, 117; PRO TRIM, ULTRA TRIM, WEEDY 2215, XR SERIES: 20, 20T, 30, 50, 50A 50S, 70, 75, 80, 80A, 85, 125; XT SERIES: 20, 35, 50T, 80, 85, 100, 125, 125B, 165, 175, 185, 195, 500, 507, 559, 587, 599, 600, 607, 608, 609, 1400, 1400T, 1500, 1600, 1600T, 1700, 1700A, 1740, 3500, GTI15, 85T; YARD PRO SESRIES: 110, 115, 116, 120, 120A, 130, 130A, 145, GTI15-T, GTI16, GTI17C, GTI17T, GTI18, GTI18KT, GTI18T, GTI19, GTI52, GTI SUPER 16, PRO-LITE, PRO-LITE PLUS, PRO SERIES: 111, 112, 114, 115, 117 , 175 | | | | | | | | | | |
| 3/8-24 RHF | 55-032-1 | | | 55-986 | | | | | 55-991 | |
| GTI19T, HP305B, HP305BP, TBP57, XT50, XT90, XT100, XT125, XT125B, XT125KT, XT125T, XT125TR, YARD PRO 105, YARD PRO 140, 165, 175, 185, 195, (STRAIGHT SHAFT), GT119, XR125, XT20, XT50, XT85, HP30SBP, TBC57, HP30SB, YP105 | | | | | | | | | | |
| 3/8-24 LHF | | | | | | | | | | |
| PRO37 | | | | | | | | | | |
| 10mm x 1.25 LHM | | | | | 55-140-0 | 55-294* | 55-989 | 55-990 | | |
| 599, 22 (EUROPE) | | | | | | | | | | |
| 8mm x 1.25 LHM | 55-987 | 55-984 | 55-983 | 55-985 | 55-140-0 | 55-294* | 55-989 | 55-990 | | 55-992 |
| GT115T-17C/XT, 20T-40/HP, 22-22T, ALL CURVED SHAFTS, ALL FEATHER-LITE UNITS | | | | | | | | | | |
| | | | | | | | | | | |

T

**WARNING**: Improperly installed trimmer attachments can create a risk of personal injury to the trimmer operator or bystanders. Improperly installed attachments can work loose and be thrown off the trimmer. In some cases, mounting bolts may not securely fit all intended trimmer models, for example: there may be a difference in the size of the bolt's counterbore versus the counterbore on the trimmer. Do not install any attachment on any trimmer without a solid, secure fit of all parts.
**ATTENTION DEALERS**: Install heads only on trimmers that are within the size range (cc displacement or horsepower) for which the head is intended. Performance will suffer if the type of head and the size of trimmer are not properly matched. Read and follow all of the Important Safety Information.

**F** = Female • **M** = Male • **LH** = Left-hand • **RH** = Right-hand • **CB** = Counterbore

*order 55-265 for 450 LH Speed Feed

# Trimmer Head Application Chart

| Model Numbers & Mounting Bolts | HD Commercial Bump & Feed | HD Commercial Bump & Feed (Eyelet Load) | Bump & Feed | Bump & Feed (Eyelet Load) | 4" Heavy-Duty Magnum Gator-head™ | 2–Line Speed Feed 3.75" LH | Lightning Load™ Bump & Feed 4.25" LH | Lightning Load Bump & Feed 5.00" LH | Cool Head Bump & Feed 4.50" RH | Cool Head Bump & Feed 6.00" LH |
|---|---|---|---|---|---|---|---|---|---|---|
| **Westmac** | | | | | | | | | | |
| 16, 23, 31 | | | | | | | | | | |
| 8mm x 1.25 LHM | 55-987 | 55-984 | 55-983 | 55-985 | 55-140-0 | 55-294* | 55-989 | 55-990 | | 55-992 |
| 35, 40, 50, 68 | | | | | | | | | | |
| 10mm x 1.0 LHF | 55-987 | | 55-038-1 | 55-985 | 55-140-0 | 55-294* | 55-989 | 55-990 | | |
| 19S, 33S | | | | | | | | | | |
| 8mm x 1.25 LHF | | | | | 55-140-0 | 55-294* | 55-989 | 55-990 | | |
| RS40, RS45 | | | | | | | | | | |
| 12mm x 1.75 LHF | | | | | | | | | | |
| **Windmill** | | | | | | | | | | |
| B40, C35, X3335G | | | | | | | | | | |
| 10mm x 1.25 LHM | | | | | 55-140-0 | 55-294* | 55-989 | 55-990 | | |
| AM SERIES | | | | | | | | | | |
| 8mm x 1.25 LHM | 55-987 | 55-984 | 55-983 | 55-985 | 55-140-0 | 55-294* | 55-989 | 55-990 | | 55-992 |
| **Vandermolen** | | | | | | | | | | |
| L1840F, L1840G, L1845E, L1845G, L2035G, L2415E, L2415G, X184SE, X185SE, X1845G, X2415E, X2415G, X3335E, X3335G | | | | | | | | | | |
| 10mm x 1.25 LHF | 55-987 | 55-984 | 55-983 | 55-985 | 56-140 | 55-294* | 55-989 | 55-990 | | 55-992 |
| L3335G | | | | | | | | | | |
| 8mm x 1.25 LHM | 55-987 | 55-984 | 55-983 | 55-985 | 55-140-0 | 55-294* | 55-989 | 55-990 | | 55-992 |
| **Xenoa** | | | | | | | | | | |
| FDC26, FBC12, BC15 | | | | | | | | | | |
| 8mm x 1.25 LHM | 55-987 | 55-984 | 55-983 | 55-985 | 55-140-0 | 55-294* | 55-989 | 55-990 | | 55-992 |
| BCD | | | | | | | | | | |
| 7mm x 1.0 LHM | 55-987 | 55-984 | 55-983 | 55-985 | 55-140-0 | 55-294* | 55-989 | 55-990 | | 55-992 |
| FBC33 | | | | | | | | | | |
| 10mm x 1.25 LHM | | | | | 55-140-0 | 55-294* | 55-989 | 55-990 | | |
| **Yamaha** | | | | | | | | | | |
| YBC20D, YBC30D, YBC40D | | | | | | | | | | |
| 8mm x 1.25 LHM | 55-987 | 55-984 | 55-983 | 55-985 | 55-140-0 | 55-294* | 55-989 | 55-990 | 55-413 | 55-406-0 |
| YBC50D | | | | | | | | | | |
| 10mm x 1.25 LHM | | | | | 55-140-0 | 55-294* | 55-989 | 55-990 | 55-413 | 55-406-0 |
| **Yazoo** | | | | | | | | | | |
| TBC31, YBC16, YBC23, YBC31 | | | | | | | | | | |
| 8mm x 1.25 LHM | 55-987 | 55-984 | 55-983 | 55-985 | 55-140-0 | 55-294* | 55-989 | 55-990 | | 55-992 |

T

# Trimmers - Brush Cutter Blades

## Grass & Brush Blades

- Made of Swedish steel to exceed international standards for durability and safety.
- Ground edge can be easily re-sharpened with standard saw chain files.
- Grass and brush blades include a 20 mm reducer bushing for easy mounting on .75" arbors.
- 3 and 4 tooth blades are reversible.

All Oregon® grass-and-brush blades and clearing-saw blades are rated to 13,000 RPM and they are so stamped. However, Oregon recommends that these blades SHOULD NOT be installed on any brushcutter capable of spinning the blade faster than 10,000 RPM.

| OREGON | Blade Dia. | Hole Dia. | Bushing | Thickness | Teeth | Product Code |
|---|---|---|---|---|---|---|
| **Use for cutting and clearing heavy weeds and underbrush** | | | | | | |
| **41-920** | 10" | 1" | 20 mm | 2.25 mm | 3 | |
| **41-921** | 12" | 1" | 20 mm | 2.25 mm | 3 | |
| **Use for cutting grass and weeds** | | | | | | |
| **41-922** | 8" | 1" | 20 mm | 1.5 mm | 4 | |
| **41-923** | 9" | 1" | 20 mm | 1.5 mm | 4 | |
| **Use for cutting grass and weeds** | | | | | | |
| **41-924** | 8" | 1" | 20 mm | 1.5 mm | 8 | |
| **41-925** | 9" | 1" | 20 mm | 1.8 mm | 8 | |

## 3-Tooth Grass & Brush Blades

- Patented design
- Creates airlift to remove debries out of the way of the cutter
- Self-sharpening cutting edge
- Reduces engine drag

| OREGON | Blade Dia. | Hole Dia. | Bushing | Thickness | Teeth | Product Code |
|---|---|---|---|---|---|---|
| **41-938** | 10" | 1" | 20 mm | 4 mm | 3 | |
| **41-939** | 12" | 1" | 20 mm | 4 mm | 3 | |

## Clearing Saw Blades

- Made of Swedish steel to exceed international standards for durability and safety
- Ground edge can be easily re-sharpened with standard saw chain files

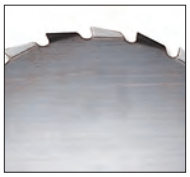

All Oregon grass-and-brush blades and clearing-saw blades are rated to 13,000 RPM and they are so stamped. However, Oregon recommends that these blades SHOULD NOT be installed on any brush cutter capable of spinning the blade faster than 10,000 RPM

| OREGON | Series | Blade Dia. | Hole Dia. | Thickness | Teeth | Product Code |
|---|---|---|---|---|---|---|
| **Recommended for straight-shaft trimmers of 24cc and larger** | | | | | | |
| **41-926** | XRT | 8" | .75" | 1.5 mm | 20 | |
| **41-927** | XRT | 8" | 1.0" | 1.5 mm | 20 | |
| **41-928** | XRT | 9" | .75" | 1.8 mm | 22 | |
| **41-929** | XRT | 9" | 1.0" | 1.8 mm | 22 | |
| **Recommended for straight-shaft trimmers of 30cc and larger** | | | | | | |
| **41-930** | EIA | 8" | .75" | 1.5 mm | 22 | |
| **41-931** | EIA | 8" | 1.0" | 1.5 mm | 22 | |
| **41-932** | EIA | 9" | .75" | 1.8 mm | 24 | |
| **41-933** | EIA | 9" | 1.0" | 1.8 mm | 24 | |
| **Recommended for straight- shaft trimmers of 40cc and larger** | | | | | | |
| **41-935** | MAXI | 8" | 1.0" | 1.5 mm | 22 | |
| **41-936** | MAXI | 9" | .75" | 1.8 mm | 24 | |
| **41-937** | MAXI | 9" | 1.0" | 1.8 mm | 24 | |

| OREGON | Description | Product Code |
|---|---|---|

## Filing Tools for Brushcutter Blades

**40458**

**Round File - 7/32"**
Use to sharpen XRT, EIA, & MAXI series clearing saw blades (2-pack)
Was Oregon® 57-466

**12211**

**Flat File**
Use to sharpen 3, 4, & 8 tooth grass & brush blades. Use with Oregon 57-505 to set the depth gauges on XRT series blades (12-pack)
Was Oregon 57-465

**31686**

**Assembled File Guide - 7/32"**
Use with 7/32" round file on XRT, EIA, & MAXI series blades to assure uniform sharpening of each tooth **Includes one round file, frame, & wooden handle**
Holds file securely
Was Oregon 57-504

T

**NOTE**: Easy to follow Instructions for sharpening blades are included on the inside cover of each brush cutter blade package.

# Trimmer / Blower Parts

## Echo

| OREGON | Replaces | Description | Product Code |
|---|---|---|---|
| **30-439-1** | A226000031 | **Air Filter**<br>Fits PB603, PB413, & PB650 blowers<br>Length: 4-3/32", width: 2-5/8", height: 1-3/8" | |
| **30-624** | A226000350<br>A226000351<br>A226000470<br>A226000471<br>A226000472 | **Air Filter** - NEW<br>Fits Echo PB251, PB255, PB265, PE280, SRM266, & SRM280<br>Length: 3-1/8", width: 3-1/8", height: 3/8", ID: 3/8" | |
| **30-617** | A226000032 | **Air Filter** - NEW<br>Fits: 400, 500, 600, & 700 series backpack blowers<br>Length: 4-5/32", width: 2-5/8", height: 1-3/8" | |
| **55-201** | 130305-08360 | **Air Filter**<br>Fits PB4600-059919 & up, PB6000 Blower, PB 60-HT-Type 1E, PB4600 Type-1E, & PB46HT-Type 1E<br>Length: 10-3/8", width: 2-7/8", height: 1-11/32" | |
| **30-003** | 130310-04560 | **Air Filter**<br>Fits model 2400 hedge clipper, ES1100-001001 to 025416, LHB 2100, PB1000, & PB1010 backpack blowers<br>Length: 2-3/4", width: 2-5/8"<br>Hole diameter: 5/16" | |
| **30-009** | 130310-51730 | **Air Filter**<br>Fits SRM2500 trimmer<br>Length: 3-1/4", width: 3-1/4"<br>Hole diameter: 5/16" |  |
| **30-616** | 13030508360<br>13030508361<br>Shindaiwa EB633 | **Air Filter** - NEW<br>Fits Echo PB60H, PB460, PB600, PB601, PB750, & PB755 series blowers<br>Length: 10-3/8", width: 2-7/8", height: 1-11/32" | |
| **30-121** | 130310-51830 | **Air Filter**<br>Fits SRM2400/SB, SRM2400, SRM2601, SRM3110, SRM3400, SRM3800, & SRM3100/SB trimmers, PB2400 & PB24LM blowers, SHC2400 & HCA2400 hedge clippers, STS2400 pole pruner, PAS2400, PE2400, & PE2601<br>Length: 3-1/8", width: 3-1/8"<br>Hole diameter: 1/4" | |
| **30-831** | | **Shop Pack** - 5 of 30-121 | |

T

## Echo

| OREGON | Replaces | Description | Product Code |
|---|---|---|---|
| **30-119** | 130310-54130 | **Air Filter**<br>Fits GT2000/SB, GT2400, SRM2400/SB, & SRM2110 model trimmers, PB2100 blower, ES2100, ES2000, & ES2400 vacuums, FHC1700 & 2100 hedge clippers, SHC1500, 1600, 2000, & 2400<br>Length: 2-5/8", width: 2-5/8", Hole diameter: 1/4" | |
| **30-830** | | **Shop Pack** - 5 of 30-119 | |
| **30-931** | 130317-00760<br>John Deere PT8376 | **Foam Air Filter**<br>Fits Echo PB400E, John Deere 4 & 4 E, & Toro 40cc blowers<br>For backpack blowers<br>Use with heavy-duty filter kit<br>Pre-oiled foam air filter<br>Length: 7" | |
| **55-227** | 130310-03360<br>John Deere PT10281 | **Air Filter**<br>Fits PB210E<br>For John Deere blower 2E<br>Felt with rubber seal<br>Length: 4", width: 2-7/8" | |
| **07-088** | 123181-39130 | **Primer Bulb**<br>Fits Echo PB770, PB770H, PB770T, SRM, CS310, CS340, CS370, CS400, SRM400, PB770T, & PB770 | |
| **07-084** | 125381-08660 | **Primer Bulb**<br>Fits Echo PB265L, PB403H, PB403T, PB460LN, PB620, PB620H, PE2400, PE265, GT200, GT2000, & GT230 | |
| **07-090** | 132115-44330 | **Fuel System Kit**<br>Fits Echo SRM2102, SRM1500, SRM2300 HC160, HC180, HC200, PB265, PB1000, PB255LN, HC2400, CS340, CS400, CS370, & CS450<br>Includes 13211544330 fuel tank grommet, V471001860 line, 13201049730 line, 13201309820 clip, & 13120519831 fuel filter | |
| **07-085** | 132115-55930 | **Fuel System Kit**<br>Fits Echo PB403, PB413, PB460, PB460LN, PB500, PB500T, PB600PB610, PB620, PB413, PB413H, PB500T, & Shindaiwa EC7500 engine cut off saw. Includes 13211555930 fuel tank grommet, A356000031 vent, V490001230 clip, V471000110 line, 13201056330 line, 13201052030 line, & 13120519831 fuel filter | |
| **55-115** | 177215-44430 | **Starter Pulley**<br>For models SMR2400 & SMR2410<br>OD: 2-1/8" | |

T

# Trimmer / Blower Parts

| OREGON | Replaces | Description | Product Code | |
|---|---|---|---|---|
| **Echo** | | | | |
| **55-116** | 178010-52130 | **Throttle Lever** | | |
| **55-252** | 175009-05532<br>AM115397 (John Deere) | **Clutch Shoe Assembly**<br>Fits SRM250E, SRM2000, SRM2200, SRM2201, SRM2500, SRM2501, SRM2502, SRM2510, SRM2510S, & John Deere 25S | | |
| **55-120** | 131004-06320 | **Fuel Cap**<br>Fits "GT" series trimmers to 1991, also fits other brands & models<br>ID: 1-3/16" | | |
| **55-008** | 131004-06610 | **Fuel Cap**<br>Fits 4500 & 4600 model blowers<br>vented<br>ID: 1-1/2" | | |
| **31-100** | 177228-01110 | **Starter Handle**<br>For trimmers and saws | | |
| **55-122** | 131004-40930<br>131004-55730<br>AM105998 (John Deere) | **Fuel Cap**<br>Fits newer "GT" series trimmers (1992 & newer), & PB100, 1010, & 2400 Blowers<br>ID: 1.474" (37 mm) | | |
| **36-423** | A27000013 | **Spark Plug Boot** - NEW<br>Fits PB265L & PPT265S<br>Angle: 45<br>Size: 7.0 mm | | |
| **55-157** | 131300-56430 | **Vent Assembly**<br>Fits models GT1100, 2000, 2100, 2102, 2103, 2400, SRM 1500, 1501, 2100, 2300, 2301, 2400, 2500, 2501, 2510, 3000, 3800, SRS 2100, PE 2400, PB1000/1010, 2400, ES 2000, & SHR 2100<br>For 3/16" line<br>OD: 3/8", length: 1" | | |
| **42-061** | P021001392<br>P021001393 | **Trimmer Guard Shield** - NEW<br>Fits: SRM225, SRM2400, SRM230, SRM2100, SRM210, SRM260, SRM261, & SRM280<br>Fits 1" to 1-1/4" Shafts | | |

T

| OREGON | Replaces | Description | Product Code |
|---|---|---|---|

## Green Machine

**55-252**
190025
190111
211325S (Hoffco)

**Clutch Shoe Assembly**
Fits 1900, 2400M, 2500, 2800, 2810, 3000M, 3000SS, 3010M, 4000M, Hoffco JP300F (1995), JP220F (1996), & SE301F (1995-1996)

## Homelite

**55-611**
D98760
D98760B

**Foam Air Filter**
Fits ST145, 155, 175, 185, 285, 385, 485 trimmers, HB100, & 180 Blower
Length: 1-3/4", width: 1-1/2", height: 3/8"
Pre-oiled foam air filter

**55-741**
DA-98912E
UP-00145

**Spool and Line for Models**
Fits K100, K200, K300, K400, BC900, C300, DC800, D725CD, HLT15, SX135, Z625CDV, Z625CD, Z725CDV, Z825SD, Z725CB, ST145, ST155, ST175, ST175C, ST185, ST275, ST285, Z725CE, Z725SE, S825CDV, S825SDV, S725SEV, HGT, GST18, GSTBC, & I725CE

**55-255**
08832-01
UP04117
AO3006

**Throttle Cable**
Fits ST155 & ST185 string trimmers
Overall length: 19"
Conduit length: 11"

**55-184**
DP153592

**Clutch Drum**
Fits Ryobi trimmer equipped with clutch

**55-256**
08832-02
UP04557

**Throttle Cable**
For Easy Reach, Easy Trim & Phantom trimmers
Overall length: 17"
Conduit length: 12-5/8"

**55-821**
DA98866A

**Bump Head Knob (black)**
For E-Z Line advance systems with 5/16-18 RH thread
Fits models ST155, ST165, ST175, ST285, SX135, GST-18, HLT-15, HGT, ST185BC, ST275, & GST

**55-816**
DA97910A

**Bump Head Knob (red)**
Fits E-Z Line advance systems with LH knob
Fits ST385, ST385C, ST485, ST385BC, HBC30, & ST375

T

# Trimmer / Blower Parts

| OREGON | Replaces | Description | Product Code |
|---|---|---|---|

## Husqvarna

| | | | |
|---|---|---|---|
| **55-168** | 503 775 301 | **Starter Pulley**<br>Fits brushcutter models 232R, 235R, & 322 | |
| **33-213** | 501 485 402 | **Spark Plug Boot**<br>45º angle<br>Fits brushcutter models 232, 235, 322, & 325 | |
| **55-164** | 503 911 802 | **Fuel Cap**<br>For brushcutter models 232R, 235, 322, & 325 | |
| **07-071** | 501 28 59-01 | **Fuel Line**<br>For saws and trimmers 140, 162, 266, 36, & 61 | |
| **33-158** | 503718201 | **On/Off Switch**<br>For trimmer models 123C, 123HD, 123L, 123LD, 225AI, 225B, 225BX, 225E, 225H, 225HBV, 225L, 225LD, 225 LITE, 225R, 225RD, 225RJ, 227L, 227JD, 227R, 227RD, 227RJ, 232L, 232R, 232RD, 232RL, 235R, 235RL, 240, 240R, & 240RBD | |
| **30-652** | 577633001 | **Pre-Filter** - NEW<br>Fits Red Max BCZ230TS, BCZ2450, BCZ2460, BCZ260, BCZ2650, BCZ2660, BCZ3050, & BCZ3060 | |
| **05-027** | 577 88 47-01 | **Spring for Engine** - NEW<br>Fits BCZ 260TS trimmer | |

## Maruyama

| | | | |
|---|---|---|---|
| **55-206** | 261598 | **Foam Air Filter**<br>Fits MC2300, MC2600, & MC3210 trimmers<br>Height: 1", OD: 2-3/16", ID: 1-5/16" | |
| **31-913** | 261628 | **Starter Handle**<br>Fits MC2300, MC2600, & MC3210 | |

T

| OREGON | Replaces | Description | Product Code |
|---|---|---|---|

## Maruyama

| | | | |
|---|---|---|---|
| **07-162** | 261696 | **Breather Assembly**<br>Fits Maruyama BC3200, BC420H, BC2300, BC2600, BC2600H, BCL2250, & BC200 | |
| **07-084** | 261874 | **Primer Bulb**<br>Fits Maruyama BC200, BC230, BC260, BC2550, BC2800, BCL2250, BC3200, BC3100, BL4500SP, & BL4600SP | |
| **07-097** | 265752 | **Fuel Line and Filter**<br>Fits Maruyama BC200, BC230, BC260, BC2550, & BC2800 | |
| **07-094** | 267328 | **Fuel Filter**<br>Fits Maruyama BC200C, BC2300, BC2600, BC3200, & BC4200 | |
| **07-098** | 268062 | **Fuel Line and Filter**<br>Fits Maruyama BC3020 & BL3100 | |
| **07-099** | 597949 | **Fuel Grommet**<br>Fits Maruyama BL4500SP & BL4600SP | |

## McCulloch

| | | | |
|---|---|---|---|
| **55-743** | 300736 | **Bump Knob**<br>Fits models MAC 15RT, 2815/16/17/18/25/27/60/65/80, Eager Beaver 15RT, 28, 28C, 280, 282, 285, 285BC, 287BC, Road Runner II, III, Silver Eagle 15RT, 28, 28C, 32BC, ET270, T0005, 29, MT270X, 280X, 300X, 302X, MT280, & MT320 | |
| **55-326** | 300149 | **Throttle Cable**<br>Braided Innerwire<br>Fits Mac 2815 & 2816, some Silver Eagle, Eager Beaver, & Road Runner<br>Overall length: 16-1/4" with Z-bend on each end<br>Conduit length: 7" | |

## MTD

| | | | |
|---|---|---|---|
| **07-017** | 781-682039 | **Fuel Filter Assembly**<br>Fits 1/8" ID fuel line | |

# Trimmer / Blower Parts

| OREGON | Replaces | Description | Product Code |
|---|---|---|---|

## MTD

| | | | |
|---|---|---|---|
| **55-803** | 791-153066B | **Bump Knob** | |
| **55-812** | 791-180814B | **Bump Knob** | |
| **43-021** | 753-04232<br>791-181597 | **Recoil Pulley**<br>Fits MTD (Ryobi, Yard Man, Bolens, Troy-Bilt) 725R, 750R, 765R, 775R, & 790R | |

## Red Max

| | | | |
|---|---|---|---|
| **30-068** | T4012-82310 | **Air Filter**<br>Fits EB7000 blower | |
| **30-067** | 550-82171 | **Foam Air Filter**<br>Fits BC2300DL & BC2600DL trimmers<br>Pre-oiled foam | |
| **30-955** | T4012-82320 | **Air Filter**<br>Fits EB-7000 blower<br>Pre-oiled foam | |
| **30-652** | 577633001<br>57763301 | **Pre-Filter** - NEW<br>Fits Red Max BCZ230TS, BCZ2450, BCZ2460, BCZ260, BCZ2650, BCZ2660, BCZ3050, & BCZ3060 | |
| **55-252** | 1100-51113<br>1130-00602 | **Clutch Shoe Assembly**<br>Fits BT2000, BC2001DL, & BC2300DL | |

## Ryan (Ryobi)

| | | | |
|---|---|---|---|
| **07-017** | 682039 | **Fuel Filter Assembly**<br>For Ryobi, Ryan, IDC, & Lawn Boy trimmers<br>Fits 1/8" ID fuel line | |

T

| OREGON | Replaces | Description | Product Code |
|---|---|---|---|

## Ryan (Ryobi)

| | | | |
|---|---|---|---|
| **55-179** | 153619 | **Outer Body, Trimmer Head**<br>For Ryobi trimmer models 130R, 135R, 700R, 710R, 720R, 740R, 750R, 760R, 765R, 766R, 768R, 770R, 920R, 960R, & 970R, Singer models GT2815, GTS2816, & GTE2818, & Sears Weedwacker models 71-51315, 71-51716, 71-51315, 71-51715, & 71-51425 | |
| **55-182** | 181468 | **Bump Knob and Spring Assembly**<br>For Ryobi trimmer | |
| **55-184** | DP153592 (Homelite) | **Clutch Drum**<br>For Ryobi trimmer equipped with clutch | |
| **55-800** | 683856<br>706-16835 (K & S) | **Starter Pulley**<br>Fits models 265-1, 365-SSR, 284-3, 264-3, & Lawn Boy 1150, 1400CL, & 1480 | |
| **55-820** | 682030<br>167304 (Green Machine)<br>4-2005 (Snapper) | **Starter Pulley**<br>Fits Lawn Boy 3100, 3130, 3160, 1300, 1360, SSI, SSII, 1400, 1460, & 1100, & Snapper models 310 & 311 | |
| **55-803** | 153066<br>682069 (Lawn Boy)<br>4-2076 (Snapper) | **Bump Knob**<br>Fits all IDC, RYOBI, & Ryan trimmers except models 395, 580, 580-1, & 780R | |
| **55-812** | 180814<br>147496 | **Bump Knob**<br>Fits IDC models 395 & 580–780 | |
| **05-072** | 610317<br>4-2074 (Snapper) | **Spring**<br>Fits Red Max, Snapper, Ryobi, Ryan, & IDC<br>13/16" x 1-3/16" | |

## Shindaiwa

| | | | |
|---|---|---|---|
| **55-231** | 20000-81740S<br>Stihl 4114-124-0800<br>Green Machine 309891<br>Robin 1082 | **Foam Air Filter**<br>Fits T20, T25, C35, & B45 trimmers<br>Diameter: 2-1/4", thickness: 5/16"<br>Pre-oiled | |

T

# Trimmer / Blower Parts

| OREGON | Replaces | Description | Product Code |
|---|---|---|---|

## Shindaiwa

| | | | |
|---|---|---|---|
| **55-510** | 70064-82210 | **Foam Air Filter**<br>Fits T18, F18, T230, C230, LE230, & TT230XB trimmers<br>Length: 3-3/8", width: 9/16"<br>Pre-oiled | |
| **30-721** | 60023-98031 | **Air Filter**<br>Fits T230 & T231 trimmers<br>Length: 2-1/4", width: 1-7/8", height: 3/8" | 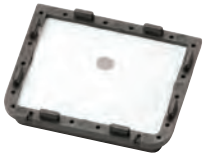 |
| **55-253** | 20035-5100<br>20035-51101 | **Clutch Assembly**<br>Fits F18, T18, T20, LT20,<br>C20, & TC1230 trimmers | |
| **55-121** | 20000-51104<br>20000-51103<br>20018-51100<br>70140-51102 | **Clutch Assembly**<br>For trimmer models TC25 & TC250 | |
| **55-097** | 200000-85200 | **Fuel Cap**<br>For models T20, T25, C25, B45,<br>LT20, F21, C20, & T/C24<br>Not vented<br>ID: 1-/2" | |
| **57-050** | 20021-51102<br>20021-51101<br>20021-61101 | **Clutch Drum**<br>Fits C35 straight-shaft trimmer | |

## Snapper

| | | | |
|---|---|---|---|
| **55-120** | 4-2110 | **Fuel Cap**<br>Fits models 212CST, P212CST, 213CST, & 215SST | |

## Stihl

| | | | |
|---|---|---|---|
| **55-079** | 4134-141-0300 | **Air Filter**<br>Fits FS200, FS300, FS350, FS400, &<br>FS450 brushcutter trimmers<br>Length: 3-1/2", width: 2-3/4", thickness: 1" | 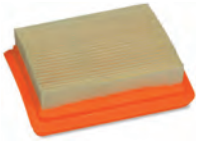 |
| **30-416** | 4203-141-0300 | **Air Filters**<br>For BR320 & BR400 backpack blowers<br>OD: 2-7/8", ID: 2", height: 1-1/2" | |
| **30-837** | | **SHOP PACK** - 5 of 30-416 | |

T

## Stihl

| OREGON | Replaces | Description | Product Code |
|---|---|---|---|
| **30-137** | 4203-141-0301 | **Air Filter**<br>Fits Early versions of BR320, 340, 400, & 420 backpack blowers<br>Length: 5-1/8", width: 3-1/2", height: 1-1/2" | |
| **30-644** | 4229-120-1800<br>4229 124 1500 | **Air Filter and Prefilter - NEW**<br>Fits Stihl BG45, BG46, BG55, BG65, BR45, SH55, & SH85<br>Length: 3", width: 2-3/8", height: 1/2" | |
| **30-643** | 4180-120-1800 | **Air Filter - NEW**<br>Fits FC100, FC110, FC90, FC95, FR130, FS90R, FS100, FS100ARX, FS110, FS130, FS310, FS87, FS90, FT100, FX130, HL100, HL90, HL95, HT100, HT101, HT130, HT131, KM100, KM110, KM130, KM90, & SP90<br>Length: 2-5/8", width: 3", height: 1/2" | |
| **30-365** | 4140-124-2800 | **Air Filter - NEW**<br>Fits FS38, FS45, FS46, FS55, KM55, HL45, HS45, & FC55<br>Length: 2-7/16", width: 2-1/4", height: 1/4" | |
| **30-649** | 4203-007-1028 | **Air Filter - NEW**<br>Fits BR340, BR340L, BR380, BR420, BR420C, SR340, & SR420<br>Length: 5-1/8", width: 3-1/2", height: 1-1/2" | |
| **55-247** | 4203-141-0310 | **Felt Pre-Cleaner**<br>Fits BR320 & 400 backpack blowers<br>For Oregon® 30-416<br>Length: 4-3/4", height: 1-1/2" | |
| **55-231** | 4114-124-0800<br>Green Machine 309891<br>Robin 1082 | **Foam Air Filter**<br>Fits Stihl old style models FS50, FS51, FS60, & FS61<br>Diameter: 2-1/4", thickness: 5/16" | |
| **30-956** | 4137-124-1500 | **Air Filter**<br>Fits FS75, FS80, FS85, HS80, HL75K, FC75, & BG75<br>Length: 2-7/16", width: 2-7/16", height: 1/4"<br>Pre-oiled | |
| **31-914** | 1121-195-3400 | **Starter Handle**<br>Fits 024, 028, 031, 034, 038, 041, & 070 chainsaws, FS220, FS280 trimmers, & BR320 & 3400 blowers | |
| **07-073** | 4130-350-6200 | **Primer Bulb with Line**<br>Fits FS350 & FS400 | |

# Trimmer / Blower Parts

| OREGON | Replaces | Description | Product Code |
|---|---|---|---|

## Stihl

| | | | |
|---|---|---|---|
| **07-074** | 4128-358-0800 | **Fuel Line**<br>Fits FS350 & FS400 | |
| **55-111** | 1121-430-0200 | **Stop Switch**<br>Fits models 024, 026, 070, TS08, & TS350 | |
| **55-110** | 4112-350-3500 | **Fuel Line Assembly**<br>For FS80 trimmer | |
| **55-102** | 4126-350-0501C | **Fuel Cap**<br>Fits FS56, 66, 81, & FS86<br>ID: 1-1/2" | |
| **55-109** | 4114-350-0502 | **Fuel Cap**<br>Fits FS80<br>ID: 1.559" (39mm) | |
| **55-460-1** | 4111-007-1001 | **Poly Cut Blade**<br>Fits Hoffco Slasher, Comet Clipper & Vandermolen Combo<br>Length: 4-1/16", hole diameter: .475" | |

## Tanaka

| | | | |
|---|---|---|---|
| **55-106** | 595-0165-C-92 | **Fuel Cap**<br>For trimmers<br>Also fits Kawasaki<br>ID: 1-1/4" | |
| **07-092** | 6684620 | **Fuel Filter**<br>Fits Tanaka TBC250SF, TBC260SF, TBC340PF, TBC5500, TBC450, TBC280, & TBC225 | |
| **07-088** | 6685139 | **Primer Pump**<br>Fits Tanaka TBC300, TBC2800, TBC265, TBC270, TBC250, THT2510, THT2510-2540, & MTD2522 | |
| **07-094** | 6692273 | **Fuel Filter**<br>Fits Tanaka TBC35cc brush cutter, TBC400, TBC422, TBC500, TBC600, TBL4600, TBL500, & TBL7800 | |

T

| OREGON | Replaces | Description | Product Code |
|---|---|---|---|

## Weed Eater

| | | | |
|---|---|---|---|
| **55-822** | 530-026048 | **Starter Pulley**<br>Fits 1500, 1700, & XR series trimmers, John Deere 82G, & Husqvarna 23LC, 26LC, & 32L | |
| **55-281** | 952-711548<br>530-086473 | **Spool and Line**<br>Fits Weed Eater models ST400, PL200, 25HO, & SST | |
| **55-285** | 952-701663 | **Spool and Line**<br>Fits Weed Eater models RT10, 110, 112, RTE113, 114, SG10, 12, 14, 15, TE15, 35, 40, 44, 45, X7110, 112, 114, & 115 | |

## Universal

| | | | |
|---|---|---|---|
| **55-185** | Universal | **Universal Trimmer Strap**<br>Comes complete with universal clamp & adjustable strap to fit most string trimmers. Heavy-duty nylon construction | |
| **55-186** | Universal | **Trimmer Harness**<br>Wide shoulder & neck pad, adjustable shoulder strap, hip pad & quick release. Fits Stihl, Solo, Poulan, Homelite, Hoffco, Echo, Brush King, & others. Heavy-duty construction | |

Can't find what you're looking for?
Try us online to search the latest products available.

OregonProducts.com

# Trimmer / Blower Parts

| OREGON | Replaces | Description | Product Code |
|---|---|---|---|

## Semi-Pneumatic Wheels

| | | | |
|---|---|---|---|
| **72-106** | Universal | **Semi-Pneumatic Wheel**<br>Size 6 x 150<br>I.D.: 1/2"<br>Hub: offset, plastic<br>Hub length: 1-3/8"<br>Tread design: diamond | |
| **72-406** | Universal | **Semi-Pneumatic Wheel**<br>Size 6 x 150<br>I.D.: 1/2"<br>Hub: centered, steel<br>Hub length: 1-3/8"<br>Tread design: diamond | |
| **72-427** | Universal | **Semi-Pneumatic Wheel**<br>Size 6 x 150<br>I.D.: 1/2"<br>Hub: offset, steel<br>Hub length: 1-3/8"<br>Tread design: diamond | |
| **72-107** | Universal | **Semi-Pneumatic Wheel**<br>Size 7 x 150<br>I.D.: 1/2"<br>Hub: offset, plastic<br>Hub length: 1-3/8"<br>Tread design: diamond | |
| **72-407** | Universal | **Semi-Pneumatic Wheel**<br>Size 7 x 150<br>I.D.: 1/2"<br>Hub: centered, steel<br>Hub length: 2-1/16"<br>Tread design: diamond | |
| **72-430** | Universal | **Semi-Pneumatic Wheel**<br>Size 7 x 150<br>I.D.: 1/2"<br>Hub: offset, steel<br>Hub length: 1-3/8"<br>Tread design: diamond | |
| **72-108** | Universal | **Semi-Pneumatic Wheel**<br>Size 8 x 175<br>I.D.: 1/2"<br>Hub: offset, plastic<br>Hub length: 1-3/8"<br>Tread design: diamond | |
| **72-408** | Universal | **Semi-Pneumatic Wheel**<br>Size 8 x 175<br>I.D.: 1/2"<br>Hub: centered, steel<br>Hub length: 2-1/16"<br>Tread design: diamond | |

# Wheels

| OREGON | Replaces | Description | Product Code |
|---|---|---|---|

## Semi-Pneumatic Wheels

| | | | |
|---|---|---|---|
| **72-409** | Universal | **Semi-Pneumatic Wheel**<br>Size 8 x 175<br>I.D.: 5/8"<br>Hub: centered, steel<br>Hub length: 2"<br>Tread design: diamond | |
| **72-437** | Universal | **Semi-Pneumatic Wheel**<br>Size 8 x 175<br>I.D.: 1/2"<br>Hub: offset, steel<br>Hub length: 1-3/8"<br>Tread design: diamond | |
| **72-110** | Universal | **Semi-Pneumatic Wheel**<br>Size 10 x 175<br>I.D.: 1/2"<br>Hub: offset, plastic<br>Hub length: 1-1/2"<br>Tread design: diamond | |
| **72-410** | Universal | **Semi-Pneumatic Wheel**<br>Size 10 x 175<br>I.D.: 1/2"<br>Hub: centered, steel<br>Hub length: 2-1/4"<br>Tread design: rib | |
| **72-446** | Universal | **Semi-Pneumatic Wheel**<br>Size 10 x 175<br>I.D.: 1/2"<br>Hub: offset, steel<br>Hub length: 1-5/8"<br>Tread design: rib | |
| **72-413** | Universal | **Semi-Pneumatic Wheel**<br>Size 10 x 275<br>I.D.: 5/8"<br>Hub: centered, steel<br>Hub length: 2-1/2"<br>Tread design: rib | |
| **72-449** | Universal | **Semi-Pneumatic Wheel**<br>Size 10 x 275<br>I.D.: 5/8"<br>Hub: offset, steel<br>Hub length: 2-1/4"<br>Tread design: rib | |
| **72-414** | Universal | **Semi-Pneumatic Wheel**<br>Size 12 x 175<br>I.D.: 1/2"<br>Hub: centered, steel<br>Hub length: 1-17/32"<br>Tread design: rib | |

| OREGON | Replaces | Description | Product Code |
|---|---|---|---|

## Semi-Pneumatic Wheels

| | | | |
|---|---|---|---|
| **72-108** | AMF 54446 | **Semi-Pneumatic Wheel**<br>Size: 8 x 175<br>I.D.: 1/2"<br>Hub: offset, plastic<br>Hub length: 1-3/8"<br>Tread design: diamond | |
| **72-001** | AYP 150340<br>AYP 193144 | **Semi-Pneumatic Wheel**<br>Size: 8 x 200<br>I.D.: 1/2"<br>Hub: plastic gear, black<br>Hub length: 1-5/8"<br>Tread design: gear | |
| **72-014** | AYP 180767 | **Semi-Pneumatic Wheel**<br>Size: 8 x 200<br>I.D.: 1/2"<br>Hub: plastic gear<br>Hub length: 1-5/8"<br>Tread design: gear | |
| **72-003** | AYP 701575 | **Semi-Pneumatic Wheel**<br>Size: 8 x 200<br>I.D.: 1/2"<br>Hub: plastic gear, yellow<br>Hub length: 1-5/8"<br>Tread design: gear | |
| **72-458** | AYP 700953 | **Semi-Pneumatic Wheel**<br>Size: 8 x 200<br>I.D.: 1/2"<br>Hub: plastic gear, white<br>Hub length: 1.6"<br>Tread design: gear | |
| **72-076** | AYP 180773 | **Semi-Pneumatic Wheel**<br>Size: 8 x 200<br>I.D.: 1/2"<br>Hub: plastic gear, white<br>Hub length: 2-1/2"<br>Tread design: gear | |
| **72-077** | AYP 180775 | **Semi-Pneumatic Wheel**<br>Size: 8 x 200<br>I.D.: 1/2"<br>Hub: plastic gear, black<br>Hub length: 1-9/16"<br>Tread design: gear | |
| **72-033** | AYP 194231X427 | **Semi-Pneumatic Wheel**<br>Size: 8 x 200<br>I.D.: 1/2"<br>Hub: plastic gear, white mag style<br>Hub length: 1-9/16"<br>Tread design: gear | |

# Wheels

| OREGON | Replaces | Description | Product Code |
|---|---|---|---|

## Semi-Pneumatic Wheels

| | | | |
|---|---|---|---|
| **72-138** | AYP 194231X460 | **Semi-Pneumatic Wheel**<br>Size: 8 x 200<br>I.D.: 1/2"<br>Hub: plastic gear, gray mag style<br>Hub length: 1-9/16"<br>Tread design: gear | |
| **72-136** | AYP 407755X427 | **Semi-Pneumatic Wheel**<br>Size: 8 x 200<br>I.D.: 1/2"<br>Hub: plastic gear, white mag style<br>Hub length: 1-9/16"<br>Tread design: gear | |
| **72-137** | AYP 407755X460 | **Semi-Pneumatic Wheel**<br>Size: 8 x 200<br>I.D.: 1/2"<br>Hub: plastic gear, gray mag style<br>Hub length: 1-9/16"<br>Tread design: gear | |
| **72-139** | AYP 150341<br>AYP 532150341 | **Semi-Pneumatic Wheel**<br>Size: 9 x 200<br>I.D.: 1/2"<br>Hub: plastic offset, black<br>Hub length: 1-3/8"<br>Tread design: gear | |
| **72-344** | AYP 583719501 | **Semi-Pneumatic Wheel**<br>Size: 8"X 1-3/4"<br>Mounted on: PP and PVC<br>Bearing Size: 1/2"(12.7mm)<br>Tread: Gear<br>Hub: plastic gear, white mag style<br>Hub Length: 1-5/8" | |
| **72-745** | Bobcat 38012N | **Semi-Pneumatic Wheel**<br>Size: 6 x 175<br>I.D.: 5/8"<br>Hub: centered, steel<br>Hub length: 2-1/4"<br>Tread design: rib | |
| **72-746** | Bobcat 76167 | **Semi-Pneumatic Wheel**<br>Size: 8 x 175<br>I.D.: 1/2"<br>Hub: offset, steel with zerk<br>Hub length: 2"<br>Tread design: rib | |
| **72-747** | Bobcat 76168 | **Semi-Pneumatic Wheel**<br>Size: 10 x 175<br>I.D.: 1/2"<br>Hub: offset, steel with zerk<br>Hub length: 2"<br>Tread design: rib | |

| OREGON | Replaces | Description | Product Code |
|---|---|---|---|

## Semi-Pneumatic Wheels

| | | | |
|---|---|---|---|
| **72-745** | Bunton PL0642 | **Semi-Pneumatic Wheel**<br>Size: 6 x 175<br>I.D.: 5/8"<br>Hub: centered, steel<br>Hub length: 2-1/4"<br>Tread design: rib | |
| **72-169** | Honda 42700-VK6-020ZA | **Semi-Pneumatic Wheel**<br>Size: 9 x 2-1/4<br>I.D.: 9/16"<br>Hub: offset with metal gear, dark gray plastic, ball bearings<br>Hub length: 1-15/16"<br>Tread design: turf | |
| **72-170** | Honda 42710-VE2-M01ZE<br>Honda 42710-VG3-B00 | **Semi-Pneumatic Wheel**<br>Size: 8 x 2<br>I.D.: 1/2"<br>Hub: offset with metal gear, gray plastic, ball bearings<br>Hub length: 1-3/4"<br>Tread design: wave | |
| **72-172** | Honda 44710-VL0-L01ZB | **Semi-Pneumatic Wheel**<br>Size: 8 x 2<br>I.D.: 1/2"<br>Hub: offset, gray plastic, ball bearings<br>Hub length: 1-3/4"<br>Tread design: wave | |
| **72-052** | Honda 44710-VG3-000 | **Semi-Pneumatic Wheel**<br>Size: 8 x 2<br>I.D.: 1/2"<br>Hub: offset gray plastic<br>Hub length: 1-3/8"<br>Tread design: wave | |
| **72-456** | Husqvarna 532-0869-43 | **Semi-Pneumatic Wheel**<br>Size: 8 x 175<br>I.D.: 1/2"<br>Hub: offset, plastic gear<br>Hub length: 1-7/8"<br>Tread design: diamond | |
| **72-115** | John Deere AM115138 | **Semi-Pneumatic Wheel**<br>Size: 8 x 200<br>I.D.: 5/16"<br>Hub length: 1-1/2" | |
| **72-022** | John Deere GX10003 | **Semi-Pneumatic Wheel**<br>Size: 8 x 175<br>I.D.: 1/2"<br>Hub: offset, plastic<br>Tread design: diamond | |

# Wheels

| OREGON | Replaces | Description | Product Code |
|---|---|---|---|

## Semi-Pneumatic Wheels

| | | | |
|---|---|---|---|
| **72-500** | Lawn Boy 681979<br>Lawn Boy 678406 | **Semi-Pneumatic Wheel**<br>Size: 6 x 150<br>I.D.: 1/2"<br>Hub: offset, steel<br>Hub length: 2"<br>Tread design: smooth | |
| **72-508** | Lawn Boy 681980<br>Lawn Boy 68213<br>Lawn Boy 678406 | **Semi-Pneumatic Wheel**<br>Size: 8 x 175<br>I.D.: 1/2"<br>Hub: offset, steel<br>Hub length: 2"<br>Tread design: smooth | |
| **72-746** | Lawn Boy 153800 | **Semi-Pneumatic Wheel**<br>Size: 8 x 175<br>I.D.: 1/2"<br>Hub: offset, steel<br>Hub length: 2"<br>Tread design: rib | |
| **72-436** | Lawn Boy 682974<br>Lawn Boy 678637 | **Semi-Pneumatic Wheel**<br>Size: 8 x 175<br>I.D.: 1/2"<br>Hub: offset, steel<br>Hub length: 1-3/8"<br>Tread design: smooth | |
| **72-747** | Lawn Boy 153802 | **Semi-Pneumatic Wheel**<br>Size: 10 x 175<br>I.D.: 1/2"<br>Hub: offset, steel, “MAG” design<br>Hub length: 2"<br>Tread design: rib | |
| **72-430** | MTD 734-0480 | **Semi-Pneumatic Wheel**<br>Size: 7 x 150<br>I.D.: 1/2"<br>Hub: offset, steel<br>Hub length: 1-3/8"<br>Tread design: diamond | |
| **72-112** | MTD 634-0021A | **Semi-Pneumatic Wheel**<br>Size: 8 x 175<br>I.D.: 1/2"<br>Hub: offset, plastic<br>Hub length: 1-1/2"<br>Tread design: turf | |
| **72-054** | MTD 734-1781 | **Semi-Pneumatic Wheel**<br>Size: 8 X 175<br>I.D.: 1/2"<br>Hub: offset, plastic<br>Hub length: 1-7/16"<br>Tread design: bar tread | |

| OREGON | Replaces | Description | Product Code |
|---|---|---|---|

## Semi-Pneumatic Wheels

| | | | |
|---|---|---|---|
| **72-073** | MTD 734-2042 | **Semi-Pneumatic Wheel**<br>Size: 8 x 200<br>I.D.: 1/2"<br>Hub: offset, plastic gear<br>Hub length: 1-3/8"<br>Tread design: zag | |
| **72-072** | MTD 734-04082 | **Semi-Pneumatic Wheel**<br>Size: 12 x 175<br>I.D.: 1/2"<br>Hub: spoke, plastic with ball bearing<br>Hub length: 2-3/8<br>Tread design: diamond | |
| **72-024** | MTD 734-1976 | **Semi-Pneumatic Wheel**<br>Size: 14 x 175<br>I.D.: 1/2"<br>Hub: spoke, plastic<br>Hub length: 2-3/8"<br>Tread design: diamond | |
| **72-346** | 73404018C | **Semi-Pneumatic Wheel**<br>Size: 8 x 200<br>ID: 1/8"<br>Mounted on: PP + Rubber<br>Bearing Size: 1/2" (12.7mm)<br>Tread: Gear<br>Hub: Offset, Steel<br>Hub Length: 1-7/16" | |
| **72-113** | Murray 71133 | **Semi-Pneumatic Wheel**<br>Size: 8 x 200<br>I.D.: 1/2"<br>Hub: plastic, gear<br>Hub length: 1-3/8"<br>Tread design: turf | |
| **72-004** | Murray 672441 | **Semi-Pneumatic Wheel**<br>Size: 8 x 200<br>I.D.: 1/2"<br>Hub: offset, gear<br>Hub length: 1-3/8"<br>Tread design: lugged rib | |
| **72-114** | Murray 71132 | **Semi-Pneumatic Wheel**<br>Size: 8 x 200<br>I.D.: 1/2"<br>Hub: offset, plastic<br>Hub length: 1-3/8"<br>Tread design: turf | |

# Wheels

| OREGON | Replaces | Description | Product Code |
|---|---|---|---|

## Semi-Pneumatic Wheels

| | | | |
|---|---|---|---|
| **72-005** | Noma 672440 | **Semi-Pneumatic Wheel**<br>Size: 9 x 200<br>I.D.: 1/2"<br>Hub: offset, plastic<br>Hub length:<br>Tread design: | |
| **72-108** | Sears/Roper 8117J | **Semi-Pneumatic Wheel**<br>Size: 8 x 175<br>I.D.: 1/2"<br>Hub: offset, plastic<br>Hub length: 1-3/8"<br>Tread design: diamond | |
| **72-437** | Sears/Roper 101766X | **Semi-Pneumatic Wheel**<br>Size: 8 x 175<br>I.D.: 1/2"<br>Hub: offset, steel<br>Hub length: 1-3/8"<br>Tread design: diamond | |
| **72-456** | Sears/Roper 702245 | **Semi-Pneumatic Wheel**<br>Size: 8 x 175<br>I.D.: 1/2"<br>Hub: offset, plastic<br>Hub length: 1-7/8"<br>Tread design: gear | |
| **72-746** | Sensation 083-106 | **Semi-Pneumatic Wheel**<br>Size: 8 x 175<br>I.D.: 1/2"<br>Hub: offset, steel with zerk<br>Hub length: 2"<br>Tread design: rib | |
| **72-747** | Sensation 083-107 | **Semi-Pneumatic Wheel**<br>Size: 10 x 175<br>I.D.: 1/2"<br>Hub: offset, steel with zerk<br>Hub length: 2"<br>Tread design: rib | |
| **72-117** | Snapper 1-8189 | **Semi-Pneumatic Wheel**<br>Size: 7 x 150<br>I.D.: 9/16"<br>Hub: offset, plastic<br>Hub length: 1-5/8"<br>Tread design: diamond | |
| **72-510** | Snapper 1-1083 | **Semi-Pneumatic Wheel**<br>Size: 7 x 150<br>I.D.: 7/16"<br>Hub: offset, steel, back to back bearings<br>Hub length: 1-5/8"<br>Tread design: diamond | |

| OREGON | Replaces | Description | Product Code |
|---|---|---|---|

## Semi-Pneumatic Wheels

| | | | |
|---|---|---|---|
| **72-450** | Snapper 1-2348<br>Snapper 1-1082 | **Semi-Pneumatic Wheel**<br>Size: 8 x 175<br>I.D.: 7/16"<br>Hub: offset, steel, back to back bearings<br>Hub length: 1-5/8"<br>Tread design: diamond | |
| **72-109** | Snapper 1-2579 | **Semi-Pneumatic Wheel**<br>Size: 9 x 175<br>I.D.: 9/16"<br>Hub: offset, plastic<br>Hub length: 1-5/8"<br>Tread design: diamond | |
| **72-442** | Snapper 1-2345 | **Semi-Pneumatic Wheel**<br>Size: 9 x 195<br>I.D.: 7/16 x 9/16<br>Hub: offset, steel<br>Hub length: 1-3/4"<br>Tread design: diamond | |
| **72-166** | Toro 105-3036 | **Semi-Pneumatic Wheel**<br>Size: 8 x 2<br>I.D.: 1/2"<br>Hub: offset, with metal gear, white plastic, mag<br>Hub length: 1-11/16"<br>Tread design: wave | |
| **72-167** | Toro 121-1379 | **Semi-Pneumatic Wheel**<br>Size: 8 x 2<br>I.D.: 3/8"<br>Hub: centered with metal gear, ball bearings, white steel, 2-piece rim<br>Hub length: 1-3/8"<br>Tread design: turf | |
| **72-168** | Toro 121-1380 | **Semi-Pneumatic Wheel**<br>Size: 8 x 2<br>I.D.: 3/8"<br>Hub: centered, ball bearings, white steel, 2-piece rim<br>Hub length: 1-3/8"<br>Tread design: turf | |

## Wheel Dust Covers

| | | | |
|---|---|---|---|
| **76-039** | AYP 189403 | **Wheel Dust Cover**<br>For many self-propelled mowers | |

## Anti-Scalp Deck Rollers & Wheels

| | | | |
|---|---|---|---|
| **72-301** | AMF/Noma 41585 | **Deck Wheel**<br>5" x 1.25"<br>ID: 1/2"<br>Hub: offset, steel<br>Hub length: 1-3/8"<br>Tread: rib | |

# Wheels

| OREGON | Replaces | Description | Product Code |
|---|---|---|---|

## Anti-Scalp Deck Rollers & Wheels

| | | | |
|---|---|---|---|
| **72-304** | AMF/Noma 52584<br>AMF/Noma 39831 | **Deck Wheel**<br>5" x 5/8"<br>ID: 1/2"<br>Hub: offset, plastic<br>Hub length: 1-3/8" | |
| **72-032** | Ariens TCU18744<br>Gravely TCU18744<br>John Deere TCU18744 | **Deck Wheel**<br>5" x 2-3/4"<br>ID: 1/2"<br>Hub: centered, plastic<br>Hub length: 3-5/16" | |
| **72-312** | AYP 165746 | **Deck Wheel**<br>5" x 2"<br>ID: 1/2"<br>Hub length: 1-9/16" | |
| **72-031** | AYP 174873 | **Deck Wheel**<br>5" x 2-1/2"<br>ID: 1/2"<br>Hub: offset, plastic<br>Hub length: 2-1/2" | |
| **72-313** | AYP 176066 | **Deck Roller**<br>7" x 3<br>ID: 1/2"<br>Plastic roller | |
| **72-162** | AYP 188606 | **Deck Wheel**<br>5" x 1-7/8"<br>ID: 1/2"<br>Hub: offset, plastic<br>Hub length: 1-5/8" | |
| **72-307** | AMF 52204<br>Case 25140<br>Gilson 208918<br>John Deere AM54243<br>John Deere AM32639 | **Deck Wheel**<br>6" x 1-3/8"<br>ID: 1/2"<br>Hub: centered, plastic<br>Hub length: 1-1/2" | |
| **72-161** | Bobcat 2721512 | **Deck Wheel**<br>5" x 2-3/4"<br>ID: 5/8"<br>Hub: centered, plastic<br>Hub length: 3-1/4" | |
| **72-306** | Bolens 173-5583<br>Bolens 1758846<br>Case C-25139<br>John Deere AM33718<br>Sears/Roper 105455X<br>Gilson 210453 | **Deck Wheel**<br>5" x 1-3/8"<br>ID: 1/2"<br>Hub: centered, plastic<br>Hub length: 1-1/2" | |

## Anti-Scalp Deck Rollers & Wheels

| OREGON | Replaces | Description | Product Code |
|---|---|---|---|
| 72-026 | Cub Cadet 634-3159 | **Deck Wheel**<br>5" x 2-5/8"<br>ID: 5/8"<br>Hub: centered, plastic<br>Hub length: 2-7/8" | |
| 72-027 | Cub Cadet 703-1890 | **Deck Wheel**<br>5" x 2-5/8"<br>ID: 1/2"<br>Hub: offset, bronze<br>Hub length: 2-3/8" | |
| 72-015 | Cub Cadet 743-04039 | **Deck Wheel**<br>5" x 2-5/8"<br>ID: 1/2"<br>Hub: offset, plastic<br>Hub length: 1-1/2" | |
| 72-025 | Cub Cadet 734-04155 | **Deck Wheel**<br>5" x 2-5/8"<br>ID: 1/2"<br>Hub: offset, plastic<br>Hub length: 2-7/16" | |
| 72-311-1 | Exmark 603299 | **Deck Wheel**<br>5" x 2-3/4"<br>ID: 5/8"<br>Hub: offset, plastic<br>Width: 2-1/2"<br>Fits 38", 40" & 50" cut decks | |
| 72-051 | Exmark 103-3168 | **Deck Wheel Kit**<br>Includes Oregon® 72-311-1 wheel, 48-007 wheel bushing, & attachment hardware | |
| 72-050 | Exmark 103-7363<br>Exmark 103-7263<br>Exmark 103-4051 | **Deck Wheel Kit**<br>Includes Oregon 72-311-1 wheel & hardware to attach | |
| 48-007 | Exmark 603602 | **Wheel Bushing**<br>For Oregon® 72-311<br>ID: 3/8", OD: 5/8"<br>Length: 2-13/16", flange OD: 1"<br>Fits Turf Ranger, Turf Tracer, & Explorer models | |
| 72-020 | Exmark 103-8415 | **Deck Wheel**<br>5" x 3-1/4"<br>ID: 5/8"<br>Hub: offset, plastic<br>Hub length: 2-1/2" | |

# Wheels

| OREGON | Replaces | Description | Product Code |
|---|---|---|---|

## Anti-Scalp Deck Rollers & Wheels

| | | | |
|---|---|---|---|
| **72-164** | Exmark 109-2098 | **Deck Wheel Kit**<br>Includes Oregon 72-020 wheel & attachment hardware | |
| **72-163** | | **Deck Wheel Hardware Kit**<br>Includes Oregon 48-007 bushing & hardware to attach Oregon 72-311-1 wheel | |
| **72-021** | Ferris 1714760 | **Deck Wheel**<br>4" x 2"<br>ID: 1/2"<br>Hub: offset, plastic<br>Hub length: 2-1/2" | |
| **72-135** | Gravely 09253700 | **Deck Wheel**<br>5" x 2-3/4"<br>ID: 1/2"<br>Hub: centered, plastic<br>Hub length: 3-5/16" | |
| **72-133** | Grasshopper 426122 | **Deck Wheel**<br>3" x 2"<br>ID: 5/8"<br>Hub: plastic<br>Hub length: 2" | |
| **72-134** | Grasshopper 603725 | **Deck Roller**<br>3" x 6-1/8"<br>ID: 5/8"<br>2-piece snap together | |
| **72-119** | John Deere GX10168 | **Deck Wheel**<br>5" x 2"<br>ID: 5/8"<br>Offset hub length: 1-3/4"<br>Fits 42", 48", & 72" decks on L-100, L110, L120, & G100 series tractors | |
| **72-099** | John Deere AM107561 | **Deck Wheel**<br>8" x 2"<br>ID: 5/8"<br>Hub: centered, plastic<br>Hub length: 2-1/2"<br>For 60" & 72" front-mount mowers | |
| **72-098** | John Deere AM107560 | **Deck Wheel**<br>6" x 1-1/2"<br>ID: 1/2"<br>Hub: centered, plastic<br>Hub length: 1-3/8"<br>Terrace wheel for 48", 54", 60" and 72" decks | |

W

| OREGON | Replaces | Description | Product Code |
|---|---|---|---|

## Anti-Scalp Deck Rollers & Wheels

| | | | |
|---|---|---|---|
| **72-165** | John Deere AM133602<br>John Deere M111489<br>John Deere AM116299 | **Deck Wheel Kit**<br>5" x 2-1/2", 5/8" | |
| **72-131** | John Deere M113955 | **Deck Roller**<br>3" x 2-1/2"<br>ID: 11/16"<br>Hub: centered, plastic<br>Hub length: 2-1/2" | |
| **72-129** | John Deere M115245 | **Deck Roller**<br>3-3/4" x 3-3/8"<br>ID: 5/8"<br>Hub: centered, plastic<br>Hub length: 3-7/8" | |
| **72-322** | Kubota 76505-46250 | **Deck Roller**<br>2-1/2" x 4"<br>ID: 1/2"<br>Hub length: 4" | |
| **72-323** | Kubota 76559-46250 | **Deck Roller**<br>3-7/8" x 4"<br>ID: 1/2"<br>Hub length: 4" | |
| **72-034** | Kubota K5112-72420 | **Deck Roller**<br>ID: 1/2", OD: 2-1/2", length: 4" | |
| **72-036** | Kubota K5371-42110 | **Deck Roller**<br>ID: 5/8", OD: 5", hub length 2-1/2" | |
| **72-038** | Kubota K5668-42100 | **Deck Wheel**<br>5" x 3"<br>ID: 5/8"<br>Hub: centered, metal bushing<br>Hub length: 3-5/8" | |
| **72-035** | Kubota K5763-46250 | **Deck Roller**<br>ID: 1/2", OD: 3", length: 4" | |

# Wheels

| OREGON | Replaces | Description | Product Code |
|---|---|---|---|

## Anti-Scalp Deck Rollers & Wheels

| | | | |
|---|---|---|---|
| **72-308-1** | MTD 734-3058<br>Hustler 031997 | **Deck Wheel**<br>5" x 2-5/8"<br>Hub length: 2-3/8"<br>Fits Rider series 200, 700, & 800<br>(1989–1998) | |
| **72-318** | MTD 734-0973 | **Deck Wheel**<br>4-3/4" x 1-3/8"<br>ID: 1/2"<br>Hub: offset, plastic<br>Hub length: 1-3/8"<br>Fits Rider series 300, 400, 500, 600, 700, & 800<br>(1985–1998) | |
| **72-319** | MTD 731-3005 | **Deck Roller**<br>6" x 2-1/2"<br>ID: 9/16" | |
| **72-094** | Murray 92683 | **Deck Wheel**<br>5" x 2-1/2"<br>ID: 1/2"<br>Hub: offset, plastic<br>Hub length: 2-1/2" | |
| **72-758** | Scag 481632 | **Deck Wheel**<br>4-1/2" x 2-7/8"<br>Hub: offset, plastic<br>Hub length: 2-7/8" | |
| **72-029** | Toro 29-4820 | **Deck Roller**<br>2-3/4" x 3"<br>ID: 1/2"<br>Hub: plastic<br>Hub length: 3" | |
| **72-316** | Wheel Horse 110506 | **Deck Wheel**<br>6" x 1-3/4"<br>ID: 1/2"<br>Hub: offset, steel<br>Hub length: 1-11/16"<br>Tread: rib | |
| **72-309** | Wheel Horse 108798 | **Deck Roller**<br>3" x 3-3/4"<br>ID: 1/2"<br>Hub length: 3-5/8"<br>For most decks on riders & lawn & garden tractors | |

W

| OREGON | Replaces | Description | Product Code |
|---|---|---|---|

## Pneumatic Wheel Assemblies

**72-796** Bobcat 38264

**Caster Wheel Assembly**
9 x 350-4 slick tread tire
Mounted on 3-piece wheel
Roller bearing size: 5/8"
Centered hub length: 4"
Use Oregon® 45-121 replacement wheel bearing kit

---

**72-765** Dixon 1022

**Caster Wheel Assembly**
410/350-4 sawtooth tire with tube, 2-ply
Mounted on 1-piece white wheel
Heavy-duty ball bearing size: 5/8"
Hub length: 4.1"
Use (1) Oregon 45-088 bearing

---

**72-722** Exmark 513648

**Caster Wheel Assembly**
9 x 350-4 slick tread tire
Roller bearing size: 3/4"
Hub length: 4 1/2"
**Semi-Pneumatic, Flat Free Tire**

---

**72-342** Exmark 130-8364

**Wheel Assembly -** NEW
Size: 13 x 650-6
Mounted on: Steel and Rubber
Ball Bearing: 1"
Tread: Super Turf
Hub: Offset, Steel
4 Ply

---

**72-723** Grasshopper 483803
Grasshopper 603924

**Wheel assembly**
9 x 350-4 smooth tread tire, 4-ply
Mounted on 1-piece wheel
Roller bearing size: 5/8", centered hub length: 3-1/4"
**Semi-Pneumatic, Flat Free Tire**

W

# Wheels

| OREGON | Replaces | Description | Product Code |
|---|---|---|---|

## Pneumatic Wheel Assemblies

| | | | |
|---|---|---|---|
| **72-795** | Scag 48307-01 | **Deck Wheel**<br>9 x 350 slick tread tire<br>Mounted on 3-piece orange wheel<br>Roller bearing size: 5/8"<br>Centered hub length: 4"<br>Use Oregon® 45-188 spanner bushing (not included) | |
| **45-188** | Scag 43022<br>Bobcat 43180 | **Spanner Bushing**<br>ID: 1/2", OD: 5/8", length: 4-1/16"<br>Fits Oregon 72-707 (OBS) & 72-795 | |
| **72-701** | | **Wheel**<br>11 x 400-4 turf tire, 2-ply<br>Mounted on 1-piece grey wheel with grease zerk<br>Ball bearing size: 3/4"<br>Offset hub length: 3-1/4"<br>Use (2) Oregon 45-034 or 45-010 bearings | |
| **72-729** | Snapper 5-0618 | **Wheel**<br>410/350-4 tubeless turf tread tire, 2-ply<br>Mounted on 1-piece gray wheel<br>Ball bearing size: 3/4"<br>Offset hub length: 3-1/4"<br>Use (2) Oregon 45-034 or 45-010 bearings | |
| **72-728** | Snapper 5-0618<br>Snapper 5-2267 | **Wheel Assembly**<br>410/350-4 tubeless stud tire, 2-ply<br>Mounted on 1-piece white wheel<br>Ball bearing size: 3/4"<br>Offset hub length: 3-1/4"<br>Use (2) Oregon 45-034 or 45-010 bearings | |

## Semi-Pneumatic, Flat-Free Wheel Assemblies

| | | | |
|---|---|---|---|
| **72-725** | Ariens 01588100<br>John Deere AM101589<br>Dixon 17080 | **Flat Free Wheel Assembly**<br>11 x 400-5 tire<br>Mounted on 1-piece white wheel<br>Heavy-duty ball bearing size: 3/4"<br>Centered hub length: 5"<br>Use Oregon 45-000 heavy-duty bearings<br>**Semi-Pneumatic, Flat Free Tire** | |

W

| OREGON | Replaces | Description | Product Code |
|---|---|---|---|

## Semi-Pneumatic, Flat-Free Wheel Assemblies

**72-735**
Exmark 103-0064
Toro 633582
Scag 482503
Wright Stander 72460004

**Flat Free Wheel Assembly**
13 x 500-6 tire
Pressed cup size for tapered roller bearings: 3/4"
Center hub length: 5-5/8"
Use with Oregon® 45-205 tapered roller bearings (not included)
**Semi-Pneumatic, Flat Free Tire**

---

**72-736**
Exmark 103-0065
Toro 633971
Scag 482504

**Flat Free Wheel Assembly**
13 x 650-6 tire
Pressed cup size for tapered roller bearings: 3/4"
Center hub length: 7-1/4" centered hub
Use with Oregon 45-205 tapered roller bearings (not included)
**Semi-Pneumatic, Flat Free Tire**

---

**72-722**
Exmark 513648

**Flat Free Wheel Assembly**
9 x 350-4 slick tread tire
Roller bearing size: 3/4"
Center hub length: 4 1/2"
**Semi-Pneumatic, Flat Free Tire**

---

**72-341**
Exmark 110-9965

**Flat Free Wheel Assembly - NEW**
11 x 400–5 tire
Thread: smooth
Mounting on: Steel and Rubber
Rolling Bearing: 3/4"
Tread: Smooth
Center Hub
Hub Length: 92 mm

---

**72-723**
Grasshopper 483803
Grasshopper 603924

**Flat Free Wheel Assembly**
9 x 350-4 tire
Mounted on 1-piece wheel
Roller bearing size: 5/8"
Center hub length: 3 1/4"
**Semi-Pneumatic, Flat Free Tire**

---

**72-737**
Gravely 52586
Gravely 45205
Ariens 71301

**Flat Free Wheel Assembly**
9 x 350-4 tire
Roller bearing size: 3/4"
Center hub length: 3-14"
**Semi-Pneumatic, Flat Free Tire**

---

**72-738**
King Kutter 168020

**Flat Free Wheel Assembly**
9 x 350-4 tire
Sintered iron bearing size: 3/4"
Center hub length: 3-1/2"
**Semi-Pneumatic, Flat Free Tire**

# Wheels

| OREGON | Replaces | Description | Product Code |
|---|---|---|---|

## Semi-Pneumatic, Flat-Free Wheel Assemblies

| | | | |
|---|---|---|---|
| **72-739** | Ransomes 2722228<br>Bobcat 2722228 | **Flat Free Wheel Assembly**<br>13 x 500-6 tire<br>Ball bearing size: 25 mm<br>Center hub length: 5-3/16"<br>**Semi-Pneumatic, Flat Free Tire** | |
| **72-749** | | **Flat Free Wheel Assembly**<br>8 x 300-4 tire<br>Roller bearing size: 3/4"<br>Center hub length: 3-1/4"<br>**Semi-Pneumatic, Flat Free Tire**<br>Use Oregon® 45-014 bearing and 45-015 bushing | |
| **72-741** | Scag 48307<br>Ransomes 38264<br>Ransomes 2720646 | **Flat Free Wheel Assembly**<br>9 x 350-4 tire<br>Roller bearing size: 5/8"<br>Center hub length: 4"<br>**Semi-Pneumatic, Flat Free Tire** | |
| **72-347** | Toro 105-1814 22" Recycler | **Flat Free Wheel Assembly** - NEW<br>8 x 1-3/4"<br>Tread: Radial<br>Center Hub Length: 1-3/4"<br>Bore: 1/2" | |
| **72-348** | Toro 22" Recycler, 20012, 20016 (2002-2005) and 20019 | **Flat Free Wheel Assembly** - NEW<br>12 x 1-3/4"-2<br>Bore: 1/2"<br>Tread: Radial<br>Hub length: 1-3/4" | |
| **72-756** | Walker 5715-4<br>Swisher 4218 | **Flat Free Wheel Assembly**<br>8 x 300-4 tire<br>Roller bearing size: 5/8"<br>Center hub length: 3-1/2"<br>**Semi-Pneumatic, Flat Free Tire** | |

W

| OREGON | Replaces | Description | Product Code |
|---|---|---|---|

## Wheels - Use With Pneumatic Tires Only

| OREGON | Size | Rim Width | Cut Length | Product Code |
|---|---|---|---|---|
| 72-800 | 410/350-4 | 2-3/4" | 2" off-center | |
| 72-804 | 410/350-6 | 3-1/4" | 3-3/4" centered | |

- 1-3/8" bore, 4-bolt pattern
- Furnished with 4 bolts & flange nuts, lock washers & nuts
- Welded on hub (add 1/4" to hub length for bearings)
- Use Oregon® 45-012, 45-058 or 45-034 bearings
- **Note:** cut length does not include bearings

72-804

## Industrial Wheels - For Wheelbarrows

| OREGON | Ball Size | Bearing | Rim | Axle Length | Tread Design | Product Code |
|---|---|---|---|---|---|---|
| 72-420 | 480/400-8 | 5/8" (45-058) | 8" dia. x 2-3/4" wide | 6" | 2-ply rib | |

Can't find what you're looking for?
Try us online to search the latest products available.

OregonProducts.com

CODE FC401V-CS03
E/NO FC401VA27302

# CROSS REFERENCES - X


Briggs & Stratton X-Reference . . LG 1048–1071

2018 OEM X-References . . . . . .LG 1072–1168

2018 Aftermarket X-References . . . . . .A1–48

# Briggs & Stratton Quick X-Reference

| Model | | Foam Air Cleaner | Cartridge | Pre-Cleaner | Air Cleaner Gasket | Carb. Mtg. Gasket | Manifold Gasket | Head Gasket #1 | Head Gasket #2 | Gasket Set | Valve Cover Gasket |
|---|---|---|---|---|---|---|---|---|---|---|---|
| 60100 | | 30-906 | 30-094 | 30-923 | | 49-355 | | 50-544 | | | 49-107 |
| 60200 | | 30-906 | | | | | | | | | |
| 60300 | | 30-906 | | | | | | | | | |
| 60400 | | 30-906 | | | | | | | | | |
| 60500 | | 30-906 | | | | | | | | | |
| 61100 | | 30-906 | 30-132 | 30-923 | | | | | | | |
| 61200 | | 30-906 | | | | | | | | | |
| 61300 | | 30-906 | | | | | | | | | |
| 61400 | | 30-906 | | | | | | | | | |
| 61500 | | 30-906 | | | | | | | | | |
| 80100 | | 30-906 | | | | 49-355 | | 50-544 | | | 49-107 |
| 80200 | 0010–2200, 8000–8200, 9000 or greater | 30-906 | 30-094 | 30-923 | | 49-355 | | 50-544 | | | 49-107 |
| 80200 | 2201-4900, 8901-8999 | 30-906 | 30-710 | 30-927 | | 49-355 | | 50-544 | | | 49-107 |
| 80300 | | 30-906 | 30-094 | 30-923 | | 49-355 | | 50-544 | | | 49-107 |
| 80400 | | 30-906 | 30-094 | 30-923 | | 49-355 | | 50-544 | | | 49-107 |
| 80500 | | 30-906 | 30-761 | | | | | | | | |
| 8P500 | | 30-183 | | | | | | | | | |
| 80700 | | 30-906 | | | | | | | | | |
| 80900 | | 30-906 | | | | | | | | | |
| 81100 | | 30-906 | | | | | | | | | |
| 81200 | | 30-906 | 30-094 | 30-923 | | 49-355 | | 50-544 | | | 49-107 |
| 81300 | | 30-906 | 30-094 | 30-923 | | 49-355 | | 50-544 | | | 49-107 |
| 81400 | | 30-906 | 30-094 | 30-923 | | 49-355 | | 50-544 | | | 49-107 |
| 81500 | | 30-906 | | | | | | | | | |
| 81700 | | 30-906 | | | | | | | | | |
| 81900 | | 30-906 | | | | | | | | | |
| 82200 | 0111-0200, 2035-2099, 8000-8199 | | 30-094 | 30-923 | 49-131 | 49-355 | | 50-544 | | | 49-107 |
| 82200 | 0300-0400, 2135-2199, 4000-5000 | | 30-310 | 30-927 | | 49-355 | | 50-544 | | | 49-107 |
| 82300 | | | 30-094 | 30-923 | 49-131 | 49-355 | | 50-544 | | | 49-107 |
| 82400 | | | 30-094 | 30-923 | 49-131 | 49-355 | | 50-544 | | | 49-107 |
| 82500 | | 30-908 | | | | | | 50-544 | | | 49-100 |
| 82900 | | 30-908 | | | | | | 50-544 | | | |
| 83400 | | | 30-710 | 30-927 | 49-129 | 49-095 | | 50-544 | | | 49-107 |
| 85400 | | | | | | | | | | | |
| 86400 | Vanguard | | 30-710 | 30-927 | | | | | | | |
| 09K500 | | 30-919 | | | | | | | | | |
| 09L500 | | 30-919 | | | | | | | | | |
| 09S500 | | 30-919 | | | | | | | | | |
| 09T500 | | 30-919 | | | | | | | | | |
| 09L600 | | 30-919 | | | | | | | | | |
| 09T600 | | 30-919 | | | | | | | | | |
| 09P600 | | 30-183 | | | | | | | | | |
| 09L700 | | 30-919 | | | | | | | | | |
| 09P700 | | 30-183 | | | | | | | | | |
| 09T700 | | 30-919 | | | | | | | | | |
| 09T800 | | 30-919 | | | | | | | | | |
| 9B900 | | 30-917 | | | | | | | | | |
| 9C900 | 97073100 or less | 30-917 | | | 49-131 | 49-095 | | 50-027 | | 50-408 | |
| 9C900 | 97073100 or greater 04011900 or less | 30-917 | | | | | | 50-445 | | | |
| 9C900 | 04011800 or greater | 30-917 | | | | | | 50-448 | | | |
| 9D900 | | 30-917 | | | | | | | | | |
| 9E900 | | 30-919 | | | | | | | | | |
| 9F900 | | 30-919 | | | | | | | | | |
| 9G900 | | 30-919 | | | | | | | | | |
| 9H900 | | 30-919 | | | | | | | | | |
| 9J900 | | 30-919 | | | | | | | | | |
| 9K900 | | 30-919 | 30-735 | 30-928 | | | | | | | |
| 9L900 | | 30-919 | | | | | | | | | |
| 9M900 | | 30-919 | | | 49-131 | 02-644-0 | | 50-448 | | 50-408 | 49-100 |
| 9P700 | | | 30-168 | | | | | | | | |
| 90100 | 96080110 or less | 30-917 | | | | 49-095 | | 50-027 | | 50-408 | 49-107 |
| 90100 | 96080110 or greater | 30-906 | | | | | | 50-445 | | | |
| 90200 | 96080110 or less | | 30-710 | 30-927 | | 49-095 | | 50-027 | | | 49-107 |
| 90200 | 96080110 or greater | | | | | 49-095 | | 50-445 | | | 49-107 |
| 90600 | | | 30-161 | 30-446 | | | | | | | |
| 90700 | | | 30-700 | 30-038 | 49-129 | 49-095 | | 50-027 | | 50-408 | 49-100 |
| 90900 | | 30-917 | | | | | | | | | |
| 91200 | | | 30-710 | 30-927 | | 49-095 | | 50-027 | | | 49-107 |
| 91412 | | | 30-735 | 30-928 | | | | | | | |
| 91700 | | | 30-700 | 30-038 | 49-129 | 49-095 | | 50-027 | | 50-408 | 49-100 |
| 92200 | | | 30-710 | 30-927 | | | | 50-445 | | 50-408 | 49-107 |
| 92500 | 0600 or greater | 30-917 | 30-094 | 30-923 | 49-131 | 49-111 | | 50-027 | | 50-408 | 49-100 |
| 92900 | 0500 or greater | 30-917 | 30-132 | 30-923 | 49-131 | 49-111 | | 50-027 | | 50-408 | 49-100 |
| 93200 | | | 30-710 | 30-927 | | 49-095 | | 50-445 | | | 49-107 |
| 93300 | Powerbuilt | | 30-123 | | | | | | | | |
| 93400 | | | 30-735 | 30-928 | | 49-095 | | 50-445 | | | 49-107 |
| 93500 | | 30-907 | 30-132 | 30-923 | 49-131 | 49-111 | | 50-027 | | 50-408 | 49-100 |
| 93900 | | 30-917 | | | 49-131 | 49-111 | | 50-027 | | 50-408 | 49-100 |
| 93J00 | | 30-183 | 30-168 | | | | | | | | |

| Base Gasket | Igition Armature | Diaphragm | Float Valve | Carb. Overhaul | Rod | Mag Oil Seal | PTO Oil Seal | Rings-Std | Starter Pulley | Recoil Spring | Recoil Starter |
|---|---|---|---|---|---|---|---|---|---|---|---|
| 50-101 | 33-362 STD, 33-342 ELE | | | | | 49-040-0 | | | 43-100 | 43-400-0 | |
| | 33-362 STD, 33-342 ELE | | | | | 49-040-0 | | | | | |
| | 33-362 STD, 33-342 ELE | | | | | 49-040-0 | | | | | |
| | 33-362 STD, 33-342 ELE | | | | | 49-040-0 | | | | | |
| | 33-362 STD, 33-342 ELE | | | | | 49-040-0 | 49-014-0 | | | | |
| | 33-362 STD, 33-342 ELE | | | | | 49-040-0 | | | | | |
| | 33-362 STD, 33-342 ELE | | | | | 49-040-0 | | | | | |
| | 33-362 STD, 33-342 ELE | | | | | 49-040-0 | | | | | |
| | 33-362 STD, 33-342 ELE | | | | | 49-040-0 | | | | | |
| | 33-362 STD, 33-342 ELE | | | | | 49-040-0 | 49-014-0 | | | | |
| 50-101 | 33-362 STD, 33-342 ELE | | | | 36-101 | 49-040-0 | | | 43-100 | 43-400-0 | |
| 50-101 | 33-362 STD, 33-342 ELE | 49-037 | | 49-078 | 36-101 | 49-040-0 | | | 43-100 | 43-400-0 | |
| 50-101 | 33-362 STD, 33-342 ELE | 49-037 | | 49-078 | 36-101 | 49-040-0 | | | 43-100 | 43-400-0 | |
| 50-101 | 33-362 STD, 33-342 ELE | | | | 36-101 | 49-040-0 | | | 43-100 | 43-400-0 | |
| 50-101 | 33-362 STD, 33-342 ELE | | | | 36-101 | 49-040-0 | | | 43-100 | 43-400-0 | |
| | 33-362 STD, 33-342 ELE | | | | | 49-040-0 | | | | | |
| | | | | | | 49-040-0 | | | | | |
| | | | | | | 49-040-0 | | | | | |
| | 33-362 STD, 33-342 ELE | | | | | 49-040-0 | | | | | |
| | 33-362 STD, 33-342 ELE | | | | | 49-040-0 | | | | | |
| 50-101 | 33-362 STD, 33-342 ELE | 49-037 | | 49-078 | 36-101 | 49-040-0 | | | 43-100 | 43-400-0 | |
| 50-101 | 33-362 STD, 33-342 ELE | | | | 36-101 | 49-040-0 | | | 43-100 | 43-400-0 | |
| 50-101 | 33-362 STD, 33-342 ELE | | | | 36-101 | 49-040-0 | | | 43-100 | 43-400-0 | |
| | 33-362 STD, 33-342 ELE | | | | | 49-040-0 | | | | | |
| | | | | | | 49-040-0 | | | | | |
| | 33-362 STD, 33-342 ELE | | | | | 49-040-0 | | | | | |
| 50-101 | 33-342 | 49-037 | | 49-078 | 36-101 | 49-040-0 | | | 43-100 | 43-400-0 | |
| 50-101 | 33-342 | 49-037 | | 49-078 | 36-101 | 49-040-0 | | | 43-100 | 43-400-0 | |
| 50-101 | 33-342 | | | | 36-101 | 49-040-0 | | | 43-100 | 43-400-0 | |
| 50-101 | 33-342 | | | | 36-101 | 49-040-0 | | | 43-100 | 43-400-0 | |
| 50-101 | | | | | 36-101 | 49-040-0 | | | | 43-400-0 | |
| 50-101 | | 49-003 | | | 36-101 | 49-040-0 | | | | 43-400-0 | |
| 50-101 | 33-342 | | 49-036 | | 36-101 | 49-040-0 | | | 43-100 | 43-400-0 | |
| | 33-342 | | 49-359 | | | | | | | | |
| | | | | | | | | | | | |
| | 33-342 | | | | | | | | 31-041 | 31-041 | 31-918 |
| | 33-342 | | | | | 49-040-0 | | | 31-041 | 31-041 | 31-918 |
| | 33-342 | | | | | 49-040-0 | | | 31-041 | 31-041 | 31-918 |
| | 33-342 | | | | | 49-040-0 | | | 31-041 | 31-041 | 31-918 |
| | 33-342 | | | | | 49-040-0 | | | 31-041 | 31-041 | 31-918 |
| | 33-342 | | | | | 49-040-0 | | | 31-041 | 31-041 | 31-918 |
| | | | | | | 49-040-0 | | | | | |
| | 33-342 | | | | | 49-040-0 | | | 31-041 | 31-041 | 31-918 |
| | | | | | | 49-040-0 | | | | | |
| | 33-342 | | | | | 49-040-0 | | | 31-041 | 31-041 | 31-918 |
| | 33-352-0 | | | | | 49-040-0 | | | 31-041 | 31-041 | 31-918 |
| | 33-342 | | | | | 49-040-0 | | 36-028 | | | |
| 50-101 | 33-342 | | | | 36-101 | 49-040-0 | 49-041-0 | 36-028 | | 43-400-0 | |
| | 33-342 | | | | | 49-040-0 | | 36-028 | | | |
| | 33-342 | | | | | 49-040-0 | | 36-028 | 31-041 | 31-041 | 31-918 |
| | 33-342 | | | | | 49-040-0 | | 36-028 | 43-100 | 43-400-0 | 31-918 |
| | 33-342 | | | | | 49-040-0 | | 36-028 | 43-100 | 43-400-0 | 31-918 |
| | 33-342 | | | | | 49-040-0 | | 36-028 | 43-100 | 43-400-0 | 31-918 |
| | 33-342 | | | | | 49-040-0 | | 36-028 | 43-100 | 43-400-0 | 31-918 |
| | 33-342 | | | | | 49-040-0 | | 36-028 | 43-100 | 43-400-0 | 31-918 |
| | 33-342 | | | | | 49-040-0 | | | 43-100 | 43-400-0 | 31-918 |
| | 33-342 | | | | | 49-040-0 | | 36-028 | | | |
| | 33-342 | | | | | 49-040-0 | | 36-028 | 43-100 | 43-400-0 | 31-918 |
| 50-101 | 33-342 | 49-007 | | | | 49-040-0 | 49-041-0 | 36-028 | 43-100 | 43-400-0 | 31-918 |
| | | | | | | | | | | | |
| 50-101 | 33-342 | | | | 36-101 | 49-040-0 | | 36-028 | 43-100 | 43-400-0 | |
| | 33-342 | | | | | 49-040-0 | | 36-028 | | | |
| 50-101 | 33-342 | 49-037 | | | 36-101 | 49-040-0 | | 36-028 | 43-100 | 43-400-0 | 31-918 |
| 50-101 | 33-342 | | | | 36-101 | 49-040-0 | | 36-028 | | | |
| | | | | | | 49-040-0 | 49-204 | | | | |
| 50-101 | 33-342 | | 49-036 | | 36-101 | 49-040-0 | 49-041-0 | | 43-100 | 43-400-0 | |
| | 33-362 STD, 33-342 ELE | | | | | 49-040-0 | | | | | |
| 50-101 | 33-342 | 49-037 | | | 36-101 | 49-040-0 | | 36-028 | 31-041 | 31-041 | |
| | 33-342 | | | | | 49-040-0 | | | 31-041 | 31-041 | 31-918 |
| 50-101 | 33-342 | | 49-036 | | 36-101 | 49-040-0 | 49-041-0 | | 43-100 | 43-400-0 | |
| 50-101 | 33-342 | 49-037 | | | 36-101 | 49-040-0 | | 36-028 | 43-100 | 43-400-0 | |
| 50-101 | 33-362 STD, 33-342 ELE | 49-005 | | | 36-101 | 49-040-0 | 49-041-0 | | 43-100 | 43-400-0 | |
| 50-101 | 33-362 STD, 33-342 ELE | 49-006 | | | 36-101 | 49-040-0 | 49-041-0 | | 43-100 | 43-400-0 | |
| 50-101 | 33-342 | 49-037 | | | 36-101 | 49-040-0 | 49-040-0 | 36-028 | 31-041 | 31-041 | 31-918 |
| | 33-342 | | | | | 49-040-0 | | | | | |
| 50-101 | 33-342 | | 49-036 | 49-305 | 36-101 | 49-040-0 | | 36-028 | 31-041 | 31-041 | 31-918 |
| 50-101 | 33-362 STD, 33-342 ELE | 49-005 | | | 36-101 | 49-040-0 | 49-041-0 | | 43-100 | 43-400-0 | |
| 50-101 | 33-342 | 49-006 | | | 36-101 | 49-040-0 | 49-041-0 | | 43-100 | 43-400-0 | |
| | | | | | | 49-040-0 | | | | | |

# Briggs & Stratton Quick X-Reference

| Model | | Foam Air Cleaner | Cartridge | Pre-Cleaner | Air Cleaner Gasket | Carb. Mtg. Gasket | Manifold Gasket | Head Gasket #1 | Head Gasket #2 | Gasket Set | Valve Cover Gasket |
|---|---|---|---|---|---|---|---|---|---|---|---|
| 94000 | I/C horizontal | | 30-123 | | | 49-095 | | 50-027 | | | 49-100 |
| 94200 | | | 30-710 | 30-927 | | | | | | | |
| 94500 | | 30-907 | 30-123 | | 49-131 | 49-111 | | 50-027 | | 50-408 | 49-100 |
| 94900 | | 30-907 | | | 49-131 | 49-111 | | 50-027 | | 50-408 | 49-100 |
| 95200 | | | 30-710 | 30-927 | | | | | | | |
| 95900 | | | | | | | | | | | |
| 95500 | | 30-907 | | | 49-131 | 49-111 | | 50-027 | | 50-408 | 49-100 |
| 95700 | | | 30-700 | 30-038 | | | | | | | |
| 95900 | | 30-917 | | | 49-131 | 49-111 | | 50-027 | | 50-408 | 49-100 |
| 96300 | | | 30-123 | | | | | | | | |
| 96500 | | 30-917 | | | 49-131 | 49-111 | | 50-027 | | 50-408 | 49-100 |
| 96700 | | | 30-700 | 30-038 | | | | | | | |
| 96900 | | 30-917 | | | 49-131 | 49-111 | | 50-027 | | 50-408 | 49-100 |
| 97300 | | | 30-123 | | | | | | | | |
| 97400 | | | 30-123 | | | | | | | | |
| 98900 | | 30-917 | | | 49-131 | | | 50-027 | | 50-408 | |
| 99700 | | | 30-047 | 30-930 | | | | | | | 49-132 |
| 10L500 | | 30-919 | | | | | | | | | |
| 10T500 | | 30-919 | | | | | | | | | |
| 10L600 | | 30-919 | | | | | | | | | |
| 10T600 | | 30-919 | | | | | | | | | |
| 10L700 | | 30-919 | | | | | | | | | |
| 10T700 | | 30-919 | | | | | | | | | |
| 10L800 | | 30-919 | 30-186 | | | | | | | | |
| 10T800 | | 30-919 | | | | | | | | | |
| 10A900 | 02101000 or less | 30-917 | | | 49-131 | 49-111 | | | | 50-408 | |
| 10A900 | 02101000 or greater | 30-919 | | | | | | | | | |
| 10A900 | 04011900 or less | | | | | | | 50-445 | | | |
| 10A900 | 04011800 or greater | | | | | | | 50-448 | | | |
| 10B900 | 02101000 or less | 30-917 | | | 49-131 | 49-111 | | | | 50-408 | |
| 10B900 | 02101000 or greater | 30-919 | | | | | | | | | |
| 10B900 | 04011900 or less | 30-917 | | | | | | 50-445 | | | |
| 10B900 | 04011800 or greater | | | | | | | 50-448 | | | |
| 10C900 | 02101000 or less | 30-917 | | | 49-131 | 49-111 | | | | 50-408 | |
| 10C900 | 02101000 or greater | 30-919 | | | | | | | | | |
| 10C900 | 04011900 or less | | | | | | | 50-445 | | | |
| 10C900 | 04011800 or greater | | | | | | | 50-448 | | | |
| 10D900 | 02101000 or less | 30-917 | | | 49-131 | 49-111 | | | | 50-408 | |
| 10D900 | 02101000 or greater | 30-919 | | | | | | | | | |
| 10D900 | 03080400 or less | | | | | | | 50-445 | | | |
| 10D900 | 03080400 or greater | | | | | | | 50-448 | | | |
| 10E900 | 02101000 or less | 30-917 | | | 49-131 | 49-111 | | | | 50-408 | |
| 10E900 | 02101000 or greater | 30-919 | | | | | | | | | |
| 10E900 | 04011900 or less | | | | | | | 50-445 | | | |
| 10E900 | 04011800 or greater | | | | | | | 50-448 | | | |
| 10F900 | 02101000 or less | 30-917 | | | 49-131 | 49-111 | | | | 50-408 | |
| 10F900 | 02101000 or greater | 30-919 | | | | | | | | | |
| 10F900 | 04011900 or less | | | | | | | 50-445 | | | |
| 10F900 | 04011800 or greater | | | | | | | 50-448 | | | |
| 10G900 | | 30-919 | | | 49-131 | 49-111 | | 50-448 | | 50-408 | |
| 10H900 | | 30-919 | | | 49-131 | 49-111 | | 50-448 | | 50-408 | |
| 10J900 | | 30-919 | | | 49-131 | 49-111 | | 50-448 | | 50-408 | |
| 10K900 | | 30-919 | | | 49-131 | 49-111 | | 50-445 | | 50-408 | |
| 10L900 | | 30-919 | | | | | | | | | |
| 10M900 | | 30-919 | | | 49-131 | 49-111 | | 50-445 | | 50-408 | |
| 10N900 | | 30-919 | | | | | | | | | |
| 10S900 | | 30-919 | | | | | | | | | |
| 100200 | | 30-913 | | | | | | 50-542 | | 50-410 | |
| 100600 | | | 30-161 | 30-446 | | | | | | | |
| 100700 | | | 30-720 | | 49-129 | | | | | | 49-132 |
| 100800 | | | 30-161 | 30-446 | | | | | | | |
| 100900 | | 30-913 | 30-094 | 30-923 | | | | 50-542 | | 50-411 | |
| 103M00 | | | 30-168 | | | | | | | | |
| 104M00 | | | 30-168 | | | | | | | | |
| 104700 | | | 30-133 | 30-514 | | | | | | | |
| 110402 | Flat panel air cleaner | | 30-710 | 30-927 | | | | | | | |
| 110402 | High mount air cleaner | | 30-033 | 30-915 | | | | | | | |
| 11A600 | | | 30-710 | 30-961 | | | | | | | |
| 11C600 | | | 30-710 | 30-961 | | | | | | | |
| 11P900 | | | 30-172 | 30-181 | | | | | | | |
| 110600 | | | 30-710 | 30-927 | | | | 50-447 | | | |
| 110700 | | | 30-700 | 30-038 | 49-129 | 49-125 | | 50-547 | | 49-163 | 49-100 |
| 110900 | | 30-903 | 30-094 | 30-923 | 49-131 | 49-125 | | 50-547 | | 49-163 | 49-100 |
| 111P00 | | | 30-172 | 30-181 | | | | | | | |
| 111200 | | 30-906 | | | | | | 50-547 | | | |
| 111400 | | | 30-033 | 30-915 | | | | | | | |
| 111600 | | | 30-033 | 30-915 | 50-446 | | | 50-447 | | | |
| 111700 | | | 30-094 | 30-923 | 49-129 | | | 50-547 | | 49-163 | 49-100 |
| 111900 | | 30-903 | | | 49-129 | | | 50-547 | | 49-163 | |
| 112P00 | | | 30-172 | 30-181 | | | | | | | |

X

# Briggs & Stratton Quick X-Reference

| Base Gasket | Igition Armature | Diaphragm | Float Valve | Carb. Overhaul | Rod | Mag Oil Seal | PTO Oil Seal | Rings-Std | Starter Pulley | Recoil Spring | Recoil Starter |
|---|---|---|---|---|---|---|---|---|---|---|---|
| 50-101 | 33-342 | | 49-036 | 49-225 | 36-101 | 49-040-0 | | | 31-041 | 31-041 | |
| | 33-342 | | | | | 49-040-0 | | | | | |
| 50-101 | 33-362 STD, 33-342 ELE | 49-005 | | | 36-101 | 49-040-0 | 49-041-0 | | 43-100 | 43-400-0 | |
| 50-101 | 33-362 STD, 33-342 ELE | 49-006 | | | 36-101 | 49-040-0 | 49-041-0 | | 43-100 | 43-400-0 | |
| | 33-342 | | | | | 49-040-0 | | | | | |
| | 33-342 | | | | | 49-040-0 | | 36-028 | | | |
| 50-101 | 33-362 STD, 33-342 ELE | 49-005 | | | 36-101 | 49-040-0 | 49-041-0 | | 43-011 | 43-400-0 | |
| | 33-342 | | | | | | | | 43-100 | 43-400-0 | |
| 50-101 | 33-342 | | | | 36-101 | 49-040-0 | 49-041-0 | | 43-100 | 43-400-0 | |
| | 33-342 | | | | | 49-040-0 | | | | | |
| 50-101 | 33-342 | 49-005 | | | 36-101 | 49-040-0 | 49-041-0 | | 43-100 | 43-400-0 | |
| | 33-342 | | | | | | | | | | |
| 50-101 | 33-342 | | | | 36-101 | 49-040-0 | 49-041-0 | 36-028 | | | |
| | 33-342 | | | | | | | | | | |
| | 33-342 | | | | | | | | | | |
| 50-101 | 33-342 | 49-007 | | | 36-101 | 49-040-0 | 49-041-0 | 36-028 | 31-041 | 31-041 | 31-918 |
| | 33-342 | | 49-036 | 49-305 | | 49-040-0 | 49-204 | | 43-014 | 43-403 | |
| | 33-342 | | | | | 49-040-0 | | | 31-041 | 31-041 | 31-918 |
| | 33-342 | | | | | 49-040-0 | | | 31-041 | 31-041 | 31-918 |
| | 33-342 | | | | | 49-040-0 | | | 31-041 | 31-041 | 31-918 |
| | 33-342 | | | | | 49-040-0 | | | 31-041 | 31-041 | 31-918 |
| | 33-342 | | | | | 49-040-0 | | | | | |
| | 33-342 | | | | | 49-040-0 | | | 31-041 | 31-041 | 31-918 |
| | 33-342 | | | | | 49-040-0 | | | 31-041 | 31-041 | 31-918 |
| | 33-342 | | | | | 49-040-0 | | | 31-041 | 31-041 | 31-918 |
| 50-101 | 33-342 | 49-007 | | | | 49-040-0 | 49-041-0 | 36-028 | | 43-400-0 | |
| | 33-342 | | | | | 49-040-0 | | 36-028 | | | |
| | 33-342 | | | | | 49-040-0 | | 36-028 | | | |
| | 33-342 | | | | | 49-040-0 | | 36-028 | 31-041 | 31-041 | 31-918 |
| 50-101 | 33-342 | 49-007 | | | | 49-040-0 | 49-041-0 | 36-028 | | 43-400-0 | |
| | 33-342 | | | | | 49-040-0 | | 36-028 | | | |
| | 33-342 | | | | | 49-040-0 | | 36-028 | | | |
| | 33-342 | | | | | 49-040-0 | | 36-028 | 31-041 | 31-041 | 31-918 |
| 50-101 | 33-342 | 49-007 | | | | 49-040-0 | 49-041-0 | 36-028 | | 43-400-0 | |
| | 33-342 | | | | | 49-040-0 | | 36-028 | | | |
| | 33-342 | | | | | 49-040-0 | | 36-028 | | | |
| | 33-342 | | | | | 49-040-0 | | 36-028 | 31-041 | 31-041 | 31-918 |
| 50-101 | 33-342 | 49-007 | | | | 49-040-0 | 49-041-0 | 36-028 | | 43-400-0 | |
| | 33-342 | | | | | 49-040-0 | | 36-028 | | | |
| | 33-342 | | | | | 49-040-0 | | 36-028 | | | |
| | 33-342 | | | | | 49-040-0 | | 36-028 | 31-041 | 31-041 | 31-918 |
| | 33-342 | | | | | 49-040-0 | | 36-028 | 31-041 | 31-041 | 31-918 |
| 50-101 | 33-342 | 49-007 | | | | 49-040-0 | | 36-028 | 31-041 | 31-041 | 31-918 |
| 50-101 | 33-342 | 49-007 | | | | 49-040-0 | | | 31-041 | 31-041 | 31-918 |
| 50-101 | 33-342 | 49-007 | | | | 49-040-0 | | | 31-041 | 31-041 | 31-918 |
| 50-101 | 33-342 | 49-007 | | | | 49-040-0 | | | 31-041 | 31-041 | 31-918 |
| | 33-342 | | | | | 49-040-0 | | | | | |
| 50-101 | 33-342 | 49-007 | | | | 49-040-0 | | | 31-041 | 31-041 | 31-918 |
| | 33-342 | | | | | 49-040-0 | | | 31-041 | 31-041 | 31-918 |
| | 33-342 | | | | | 49-040-0 | | | 31-041 | 31-041 | 31-918 |
| | 33-340 | 49-037 | | | | 49-040-0 | 49-046 | | | | |
| | | | | | | 49-040-0 | 49-204 | | | | |
| | | | 49-036 | | 36-102 | 49-040-0 | 49-204 | | | | |
| | | | | | | 49-040-0 | 49-204 | | | | |
| | 33-340 | 49-037 | | 49-076 | | 49-040-0 | 49-049 | | | | |
| | | | | | | 49-040-0 | 49-204 | | | | |
| | | | | | | 49-040-0 | 49-204 | | | | |
| | 33-341 | | | | | | 49-204 | | 43-014 | 43-403 | |
| | 33-353 | | | | | 49-040-0 | | | 31-063 | 31-063 | 31-068<br>31-919 |
| | 33-353 | | | | | 49-040-0 | | | 31-063 | 31-063 | 31-068<br>31-919 |
| | 33-341 | | | | | 49-040-0 | 49-204 | 36-027 | 31-063 | 31-063 | 31-068 |
| | 33-341 | | | | | 49-040-0 | 49-204 | 36-027 | 31-063 | 31-063 | 31-068 |
| | | | | | | 49-040-0 | 49-204 | | | | |
| | 33-341 | | | | | 49-040-0 | 49-204 | | 31-063 | 31-063 | 31-068 |
| 50-101 | 33-342 | | 49-036 | | 36-102 | 49-040-0 | 49-041-0 | | 43-100 | 43-400-0 | |
| 50-101 | 33-362 STD, 33-342 ELE | 49-006 | | | 36-102 | 49-040-0 | 49-041-0 | | 43-100 | 43-400-0 | |
| | | | | | | 49-040-0 | 49-204 | | | | |
| | 33-362 STD, 33-342 ELE | 49-037 | | | 36-102 | 49-040-0 | | | | | |
| | | | | | | 49-040-0 | | | 31-063 | 31-063 | 31-919 |
| | 33-342 | | | | | 49-040-0 | 49-204 | 36-027 | 31-063 | 31-063 | 31-068 |
| | 33-342 | | | | 36-102 | 49-040-0 | 49-041-0 | | 43-100 | 43-400-0 | |
| | 33-362 STD, 33-342 ELE | 49-006 | | | 36-102 | 49-040-0 | 49-041-0 | | | | |
| | | | | | | 49-040-0 | 49-204 | | | | |

X

# Briggs & Stratton Quick X-Reference

| Model | | Foam Air Cleaner | Cartridge | Pre-Cleaner | Air Cleaner Gasket | Carb. Mtg. Gasket | Manifold Gasket | Head Gasket #1 | Head Gasket #2 | Gasket Set | Valve Cover Gasket |
|---|---|---|---|---|---|---|---|---|---|---|---|
| 112200 | 0016-0799 | 30-906 | 30-132 | 30-923 | 49-131 | 49-074 | | 50-547 | | | 49-107 |
| 112200 | 0016-0799 | | 30-710 | 30-927 | 49-131 | 49-095 | | 50-547 | | | 49-107 |
| 112700 | | | 30-700 | 30-038 | 49-129 | 49-125 | | 50-547 | | 49-163 | 49-100 |
| 112900 | | 30-903 | 30-094 | 30-923 | 49-131 | 49-125 | | 50-547 | | 49-163 | 49-100 |
| 113400 | | | 30-033 | 30-915 | | | | | | | |
| 113900 | | 30-903 | | | 49-131 | 49-125 | | 50-547 | | 49-163 | 49-100 |
| 114P00 | | | 30-172 | 30-181 | | | | | | | |
| 114700 | | | 30-094 | 30-923 | 49-129 | 49-125 | | 50-547 | | 49-163 | 49-100 |
| 114900 | | 30-903 | 30-094 | 30-923 | 49-131 | 49-125 | | 50-547 | | 49-163 | 49-100 |
| 115400 | | | 30-735 | 30-928 | | | | | | | |
| 117400 | | | 30-710 | 30-927 | | | | | | | |
| 118400 | | | 30-710 | 30-927 | | | | | | | |
| 12A100 | | | | | | | | | | | |
| 12A300 | | | | | | | | | | | |
| 12A400 | | | | | | | | | | | |
| 12A600 | | | 30-710 | 30-961 | | | | | | | |
| 12A700 | | | | | | | | | | | |
| 12A800 | | | 30-710 | 30-927 | 49-069 | 49-108 | | 50-543 | | | 49-132 |
| 12B400 | | | | | | | | | | | |
| 12B600 | | | | | | | | | | | |
| 12C100 | | | | | | | | | | | |
| 12C300 | | | | | | | | | | | |
| 12C400 | | | | | | | | | | | |
| 12C600 | | | 30-710 | 30-961 | | | | | | | |
| 12C700 | | | 30-710 | 30-961 | | | | | | | |
| 12C800 | | | 30-710 | 30-927 | 49-069 | 49-108 | | 50-441 | | | 49-132 |
| 12D100 | | | | | | | | | | | |
| 12D200 | | | | | | | | | | | |
| 12D300 | Intek Snow | | | | | | | | | | |
| 12D400 | | | | | | | | | | | |
| 12D600 | | | 30-710 | 30-961 | | | | | | | |
| 12D800 | | | 30-710 | 30-927 | 49-069 | 49-108 | | 50-441 | | | 49-132 |
| 12E100 | | | | | | | | | | | |
| 12E300 | | | | | | | | | | | |
| 12E400 | | | | | | | | | | | |
| 12E600 | | | 30-710 | 30-961 | | | | | | | |
| 12E700 | | | 30-710 | 30-927 | 49-069 | 49-108 | | 50-441 | | | 49-132 |
| 12E800 | | | 30-710 | 30-927 | 49-069 | 49-108 | | 50-441 | | | 49-132 |
| 12F600 | | | | | | | | | | | |
| 12F700 | | | 30-710 | 30-927 | 49-069 | 49-108 | | 50-441 | | | 49-132 |
| 12F800 | | | 30-710 | 30-927 | 49-069 | 49-108 | | 50-441 | | | 49-132 |
| 12G600 | | | | | | | | | | | |
| 12G700 | | | 30-710 | 30-927 | 49-069 | 49-108 | | 50-441 | | | 49-132 |
| 12G800 | | | 30-710 | 30-927 | 49-069 | 49-108 | | 50-441 | | | 49-132 |
| 12H100 | | | 30-710 | 30-961 | | | | | | | |
| 12H200 | | | 30-710 | 30-961 | | | | | | | |
| 12H300 | | | 30-710 | 30-961 | | | | | | | |
| 12H600 | | | 30-033 | 30-915 | | | | | | | |
| 12H700 | | | 30-710 | 30-961 | | | | | | | |
| 12H800 | | | 30-710 | 30-961 | | | | | | | |
| 12J600 | | | 30-710 | 30-961 | | | | | | | |
| 12J700 | | | 30-710 | 30-961 | | | | | | | |
| 12J800 | | | 30-710 | 30-927 | 49-069 | 49-108 | | 50-441 | | | 49-132 |
| 12J900 | | | 30-710 | 30-961 | | | | | | | |
| 12K300 | | | | | | | | | | | |
| 12K600 | | | 30-033 | 30-915 | | | | | | | |
| 12L200 | | | 30-710 | 30-961 | | | | | | | |
| 12L300 | | | 30-710 | 30-961 | | | | | | | |
| 12L800 | | | 30-710 | 30-961 | | | | | | | |
| 12L900 | | | | | | | | | | | |
| 12M800 | | | | | | | | | | | |
| 12P800 | | | 30-710 | 30-961 | | | | | | | |
| 12Q500 | | | 30-033 | 30-915 | | | | | | | |
| 12Q800 | | | 30-710 | 30-961 | | | | | | | |
| 12Q900 | | | 30-172 | 30-181 | | | | | | | |
| 12R100 | | | | | | | | | | | |
| 12R500 | | | 30-033 | 30-915 | | | | | | | |
| 12R600 | | | 30-033 | 30-915 | | | | | | | |
| 12R900 | | | 30-172 | 30-181 | | | | | | | |
| 12S100 | | | 30-033 | 30-915 | | | | | | | |
| 12S200 | | | 30-710 | 30-961 | | | | | | | |
| 12S400 | | | 30-033 | 30-915 | | | | | | | |

# Briggs & Stratton Quick X-Reference

| Base Gasket | Igition Armature | Diaphragm | Float Valve | Carb. Overhaul | Rod | Mag Oil Seal | PTO Oil Seal | Rings-Std | Starter Pulley | Recoil Spring | Recoil Starter |
|---|---|---|---|---|---|---|---|---|---|---|---|
| 50-101 | 33-362 STD, 33-342 ELE | 49-037 | | 49-078 | 36-102 | 49-040-0 | 49-040-0 | | 43-100 | 43-400-0 | |
| 50-101 | 33-362 STD, 33-342 ELE | 49-037 | | 49-078 | 36-102 | 49-040-0 | | | 43-100 | 43-400-0 | |
| 50-101 | 33-342 | | 49-036 | | 36-102 | 49-040-0 | 49-041-0 | | 43-100 | 43-400-0 | |
| 50-101 | 33-362 STD, 33-342 ELE | 49-006 | | | 36-102 | 49-040-0 | 49-041-0 | | 43-100 | 43-400-0 | |
| | 33-353 | | | | | 49-040-0 | | | 31-063 | 31-063 | 31-919 |
| 50-101 | 33-362 STD, 33-342 ELE | 49-006 | | | 36-102 | 49-040-0 | 49-041-0 | | 43-100 | 43-400-0 | |
| | | | | | | 49-040-0 | 49-204 | | | | |
| 50-101 | 33-342 | | 49-036 | | 36-102 | 49-040-0 | 49-041-0 | | 43-100 | 43-400-0 | |
| 50-101 | 33-342 | 49-006 | | | 36-102 | 49-040-0 | 49-041-0 | | 43-100 | 43-400-0 | |
| | | | 49-359 | | | | | | 43-014 | 43-403 | |
| | | | 49-359 | | | | | | | | |
| | | | | | | | | | | | |
| | 33-353 | | | | | 49-040-0 | | | | | |
| | 33-353 | | | | | 49-040-0 | | | | | |
| | 33-353 | | | | | 49-040-0 | | | | | |
| | 33-341 | | | | | 49-040-0 | 49-204 | | 31-063 | 31-063 | 31-068 |
| | | | | | | 49-040-0 | | | 43-014 | 43-403 | 31-061 |
| 49-114 | 33-341 | | 49-036 | 49-305 | 36-102 | 49-040-0 | 49-204 | 36-027 | 31-063<br>43-014 | 31-063<br>43-403 | 31-068<br>31-061 |
| | 33-353 | | | | | 49-040-0 | | | | | |
| | 33-341 | | | | | 49-040-0 | 49-204 | | 31-063 | 31-063 | 31-068 |
| | 33-353 | | | | | 49-040-0 | | | | | |
| | 33-353 | | | | | 49-040-0 | | | | | |
| | 33-353 | | | | | 49-040-0 | | | | | |
| | 33-341 | | | | | 49-040-0 | 49-204 | | 31-063 | 31-063 | 31-068 |
| | 33-341 | | | | | 49-040-0 | 49-204 | 36-027 | 43-014 | 43-403 | 31-061 |
| 49-114 | 33-341 | | 49-036 | 49-305 | 36-102 | 49-040-0 | 49-204 | 36-027 | 31-063<br>43-014 | 31-063<br>43-403 | 31-068<br>31-061 |
| | 33-353 | | | | | 49-040-0 | | | | | |
| | 33-353 | | | | | 49-040-0 | | | | | |
| | 33-353 | | 49-036 | | | 49-040-0 | | | 31-063 | 31-063 | |
| | 33-353 | | | | | 49-040-0 | | | | | |
| | 33-341 | | | | | 49-040-0 | 49-204 | | 31-063 | 31-063 | 31-068 |
| 49-114 | 33-341 | | 49-036 | 49-305 | 36-102 | 49-040-0 | 49-204 | 36-027 | 31-063<br>43-014 | 31-063<br>43-403 | 31-068<br>31-061 |
| | 33-353 | | | | | 49-040-0 | | | | | |
| | 33-353 | | | | | 49-040-0 | | | | | |
| | 33-353 | | | | | 49-040-0 | | | | | |
| | 33-341 | | | | | 49-040-0 | 49-204 | | 31-063 | 31-063 | 31-068 |
| 49-114 | 33-341 | | 49-036 | 49-305 | 36-102 | 49-040-0 | 49-204 | 36-027 | 31-063<br>43-014 | 31-063<br>43-403 | 31-068<br>31-061 |
| 49-114 | 33-341 | | 49-036 | 49-305 | 36-102 | 49-040-0 | 49-204 | 36-027 | 31-063<br>43-014 | 31-063<br>43-403 | 31-068<br>31-061 |
| | 33-341 | | | | | 49-040-0 | 49-204 | | 31-063 | 31-063 | 31-068 |
| 49-114 | 33-341 | | 49-036 | 49-305 | 36-102 | 49-040-0 | 49-204 | 36-027 | 31-063<br>43-014 | 31-063<br>43-403 | 31-068<br>31-061 |
| 49-114 | 33-341 | | 49-036 | | 36-102 | 49-040-0 | 49-204 | 36-027 | 31-063<br>43-014 | 31-063<br>43-403 | 31-068<br>31-061 |
| | 33-341 | | | | | 49-040-0 | 49-204 | | 31-063 | 31-063 | 31-068 |
| 49-114 | 33-341 | | 49-036 | 49-305 | 36-102 | 49-040-0 | 49-204 | 36-027 | 31-063<br>43-014 | 31-063<br>43-403 | 31-068<br>31-061 |
| 49-114 | 33-341 | | 49-036 | 49-305 | 36-102 | 49-040-0 | 49-204 | 36-027 | 31-063<br>43-014 | 31-063<br>43-403 | 31-068<br>31-061 |
| | 33-353 | | | | | 49-040-0 | | | 31-063 | 31-063 | 31-919 |
| | 33-353 | | | | | 49-040-0 | | | 31-063 | 31-063 | 31-919 |
| | 33-353 | | | | | 49-040-0 | | | 31-063 | 31-063 | 31-919 |
| | 33-341 | | | | | 49-040-0 | 49-204 | | 31-063 | 31-063 | 31-068 |
| | 33-341 | | | | | 49-040-0 | 49-204 | 36-027 | 31-063 | 31-063 | 31-068 |
| | 33-341 | | | | | 49-040-0 | 49-204 | 36-027 | 31-063 | 31-063 | 31-068 |
| | 33-341 | | | | | 49-040-0 | 49-204 | | 31-063 | 31-063 | 31-068 |
| | 33-341 | | | | | 49-040-0 | 49-204 | 36-027 | 31-063 | 31-063 | 31-068 |
| 49-114 | 33-341 | | 49-036 | | 36-102 | 49-040-0 | 49-204 | 36-027 | 31-063<br>43-014 | 31-063<br>43-403 | 31-068<br>31-061 |
| | 33-341 | | | | | 49-040-0 | 49-204 | 36-027 | 31-063 | 31-063 | 31-068 |
| | 33-353 | | | | | 49-040-0 | | | 31-063 | 31-063 | 31-919 |
| | 33-341 | | | | | 49-040-0 | 49-204 | | 31-063 | 31-063 | 31-068 |
| | | | | | | 49-040-0 | | | 31-063 | 31-063 | 31-919 |
| | 33-353 | | | | | 49-040-0 | | | 31-063 | 31-063 | 31-919 |
| | 33-341 | | | | | 49-040-0 | 49-204 | 36-027 | 31-063<br>43-014 | 31-063<br>43-403 | 31-068<br>31-061 |
| | 33-341 | | | | | 49-040-0 | 49-204 | | 31-063 | 31-063 | 31-068 |
| | 33-341 | | | | | 49-040-0 | 49-204 | 36-027 | 31-063<br>43-014 | 31-063<br>43-403 | 31-068<br>31-061 |
| | 33-341 | | | | | 49-040-0 | 49-204 | 36-027 | 31-063 | 31-063 | 31-068 |
| | 33-341 | | | | | 49-040-0 | 49-204 | | 31-063 | 31-063 | 31-068 |
| | 33-341 | | | | | 49-040-0 | 49-204 | 36-027 | 31-063 | 31-063 | 31-068 |
| | 33-353 | | | | | 49-040-0 | | | 31-063 | 31-063 | 31-068 |
| | | | | | | 49-040-0 | 49-204 | | | | |
| | | | | | | 49-040-0 | 49-204 | | | | |
| | | | | | | 49-040-0 | 49-204 | | | | |
| | 33-353 | | | | | 49-040-0 | | | 31-063 | 31-063 | 31-919 |
| | 33-353 | | | | | 49-040-0 | | | 31-063 | 31-063 | 31-919 |
| | 33-353 | | | | | 49-040-0 | | | 31-063 | 31-063 | 31-919 |

X

# Briggs & Stratton Quick X-Reference

| Model | | Foam Air Cleaner | Cartridge | Pre-Cleaner | Air Cleaner Gasket | Carb. Mtg. Gasket | Manifold Gasket | Head Gasket #1 | Head Gasket #2 | Gasket Set | Valve Cover Gasket |
|---|---|---|---|---|---|---|---|---|---|---|---|
| 12S500 | | | 30-033 | 30-915 | | | | | | | |
| 12S600 | | | 30-033 | 30-915 | | | | | | | |
| 12S700 | | | | | | | | | | | |
| 12S800 | | | 30-710 | 30-927 | 49-069 | 49-108 | | 50-441 | | | 49-132 |
| 12S900 | | | 30-172 | 30-181 | | | | | | | |
| 12T100 | | | 30-033 | 30-915 | | | | | | | |
| 12T200 | | | | | | | | | | | |
| 12T300 | | | 30-710 | 30-961 | | | | | | | |
| 12T400 | | | 30-033 | 30-915 | | | | | | | |
| 12T700 | | | 30-710 | 30-927 | 49-069 | 49-108 | | 50-441 | | | 49-132 |
| 12T800 | | | 30-710 | 30-927 | 49-069 | 49-108 | | 50-441 | | | 49-132 |
| 12U800 | | | 30-029 | 30-930 | 49-069 | 49-108 | | 50-441 | | | 49-132 |
| 12V800 | | | 30-029 | 30-930 | | | | | | | |
| 12W800 | | | 30-029 | 30-930 | | | | | | | |
| 12X800 | | | 30-710 | 30-961 | | | | | | | |
| 12Y800 | | | 30-710 | 30-961 | | | | | | | |
| 12Z100 | | | | | | | | | | | |
| 12Z300 | | | | | | | | | | | |
| 120200 | | | 30-033 | 30-915 | | | | | | | |
| 120300 | | | 30-033 | 30-915 | | | | | | | |
| 120400 | | | 30-033 | 30-915 | | | | | | | |
| 120500 | | | 30-029 | 30-930 | 49-069 | 49-108 | | 50-441 | | | 49-132 |
| 120600 | | | 30-710 | 30-961 | | | | | | | |
| 120H00 | | | 30-029 | 30-930 | 49-069 | 49-108 | | 50-441 | | | 49-132 |
| 120K00 | | | | | | | | | | | |
| 120L00 | | | 30-449 | | | | | | | | |
| 120T00 | | | 30-449 | | | | | | | | |
| 121A00 | | | 30-033 | 30-915 | | | | | | | |
| 121H00 | | | 30-029 | 30-930 | 49-069 | 49-108 | | 50-441 | | | 49-132 |
| 121K00 | | | | | | | | | | | |
| 121Q00 | | | 30-172 | 30-181 | | | | | | | |
| 121R00 | | | 30-172 | 30-181 | | | | | | | |
| 121S00 | | | 30-172 | 30-181 | | | | | | | |
| 121000 | | | 30-033 | 30-915 | | | | | | | |
| 121100 | | | 30-710 | 30-961 | | | | | | | |
| 121200 | | | 30-033 | 30-915 | | | | | | | |
| 121300 | High mount air filter | | 30-033 | 30-915 | | | | | | | |
| 121300 | Flat panel air filter | | 30-710 | 30-927 | | | | | | | |
| 121400 | | | 30-033 | 30-915 | | | | | | | |
| 121600 | | | 30-033 | 30-915 | 50-438 | | | 50-447 | | | |
| 121700 | | | 30-710 | 30-927 | 49-129 | 49-108 | | 50-543 | | | 49-132 |
| 121800 | | | 30-710 | 30-927 | 49-129 | 49-108 | | 50-543 | | | 49-132 |
| 122H00 | | | 30-029 | 30-930 | 49-069 | 49-108 | | 50-441 | | | 49-132 |
| 122K00 | | | 30-029 | 30-930 | 49-069 | 49-108 | | 50-441 | | | 49-132 |
| 122L00 | | | 30-710 | 30-961 | | | | | | | |
| 122M00 | | | 30-710 | 30-961 | | | | | | | |
| 122Q00 | | | 30-172 | 30-181 | | | | | | | |
| 122R00 | | | 30-172 | 30-181 | | | | | | | |
| 122S00 | | | 30-172 | 30-181 | | | | | | | |
| 122T00 | | | 30-710 | 30-961 | | | | | | | |
| 122000 | | | 30-033 | 30-915 | | | | | | | |
| 122100 | | | | | | | | | | | |
| 122200 | | | 30-710 | 30-961 | | | | | | | |
| 122300 | | | 30-033 | 30-915 | | | | | | | |
| 122400 | | | 30-710 | 30-961 | | | | | | | |
| 122600 | | | 30-033 | 30-915 | | | | 50-447 | | | |
| 122700 | | | 30-710 | 30-927 | 49-129 | 49-108 | | 50-543 | | | 49-132 |
| 122800 | | | | | | | | | | | |
| 123H00 | | | 30-029 | 30-930 | 49-069 | 49-108 | | 50-441 | | | 49-132 |
| 123J00 | | | 30-029 | 30-930 | | | | | | | |
| 123K00 | | | 30-029 | 30-930 | 49-069 | 49-108 | | 50-441 | | | 49-132 |
| 123300 | | | 30-033 | 30-915 | | | | | | | |
| 123400 | | | 30-033 | 30-915 | | | | | | | |
| 123600 | | | 30-033 | 30-915 | | | | 50-447 | | | |
| 123700 | | | 30-710 | 30-927 | 49-129 | 49-108 | | 50-543 | | | 49-132 |
| 123800 | | | 30-710 | 30-927 | 49-129 | 49-108 | | 50-543 | | | 49-132 |
| 124H00 | | | 30-710 | 30-961 | | | | | | | |
| 124K00 | | | 30-710 | 30-961 | | | | | | | |
| 124L00 | | | 30-710 | 30-961 | | | | | | | |
| 124Q00 | | | 30-172 | 30-181 | | | | | | | |
| 124S00 | | | 30-172 | 30-181 | | | | | | | |
| 124T00 | | | 30-710 | 30-961 | | | | | | | |
| 124000 | | | 30-033 | 30-915 | | | | | | | |
| 124300 | | | 30-710 | 30-961 | | | | | | | |
| 124400 | | | 30-710 | 30-961 | | | | | | | |
| 124600 | | | 30-710 | 30-961 | | | | | | | |
| 124700 | | | 30-710 | 30-927 | 49-129 | 49-108 | | 50-543 | | | 49-132 |
| 124800 | | | 30-710 | 30-927 | 49-129 | 49-108 | | 50-543 | | | 49-132 |
| 125H00 | | | 30-710 | 30-961 | | | | | | | |

| Base Gasket | Igition Armature | Diaphragm | Float Valve | Carb. Overhaul | Rod | Mag Oil Seal | PTO Oil Seal | Rings-Std | Starter Pulley | Recoil Spring | Recoil Starter |
|---|---|---|---|---|---|---|---|---|---|---|---|
| | 33-341 | | | | | 49-040-0 | 49-204 | | 31-063 | 31-063 | 31-068 |
| | 33-341 | | | | | 49-040-0 | 49-204 | | 31-063 | 31-063 | 31-068 |
| | 33-341 | | | | | 49-040-0 | 49-204 | 36-027 | 31-063<br>43-014 | 31-063<br>43-403 | 31-068<br>31-061 |
| 49-114 | 33-341 | | 49-036 | 49-305 | 36-102 | 49-040-0 | 49-204 | 36-027 | 31-063<br>43-014 | 31-063<br>43-403 | 31-068<br>31-061 |
| | | | | | | 49-040-0 | 49-204 | | | | |
| | 33-353 | | | | | 49-040-0 | | | 31-063 | 31-063 | 31-919 |
| | 33-353 | | | | | 49-040-0 | | | 31-063 | 31-063 | 31-919 |
| | 33-353 | | | | | 49-040-0 | | | 31-063 | 31-063 | 31-919 |
| | 33-353 | | | | | 49-040-0 | | | 31-063 | 31-063 | 31-919 |
| 49-114 | 33-341 | | 49-036 | 49-305 | 36-102 | 49-040-0 | 49-204 | 36-027 | 31-063<br>43-014 | 31-063<br>43-403 | 31-068<br>31-061 |
| 49-114 | 33-341 | | 49-036 | 49-305 | 36-102 | 49-040-0 | 49-204 | 36-027 | 31-063<br>43-014 | 31-063<br>43-403 | 31-068<br>31-061 |
| 49-114 | 33-341 | | 49-036 | 49-305 | 36-102 | 49-040-0 | 49-204 | 36-027 | 31-063 | 31-063 | 31-068 |
| | 33-341 | | | | | 49-040-0 | 49-204 | 36-027 | 31-063 | 31-063 | 31-068 |
| | 33-341 | | | | | 49-040-0 | 49-204 | 36-027 | 31-063 | 31-063 | 31-068 |
| | 33-341 | | | | | 49-040-0 | 49-204 | 36-027 | 31-063 | 31-063 | 31-068 |
| | 33-341 | | | | | 49-040-0 | 49-204 | 36-027 | 31-063 | 31-063 | 31-068 |
| | 33-353 | | | | | 49-040-0 | 49-204 | | | | |
| | 33-353 | | | | | 49-040-0 | | | | | |
| | 33-353 | | | | | 49-040-0 | | | 31-063 | 31-063 | 31-919 |
| | 33-353 | | | | | 49-040-0 | | | 31-063 | 31-063 | 31-919 |
| | 33-353 | | | | | 49-040-0 | | | 31-063 | 31-063 | 31-919 |
| 49-114 | 33-341 | | 49-036 | 49-305 | 36-102 | 49-040-0 | 49-204 | 36-027 | 43-014 | 43-403 | |
| | 33-341 | | | | | 49-040-0 | 49-204 | | | | |
| 49-114 | 33-341 | | 49-036 | 49-305 | 36-102 | 49-040-0 | 49-204 | 36-027 | 31-063 | 31-063 | 31-068 |
| | 33-341 | | | | | 49-040-0 | 49-204 | | 31-063 | 31-063 | 31-068 |
| | 33-341 | | | | | 49-040-0 | 49-204 | | 31-063 | 31-063 | 31-068 |
| | 33-341 | | | | | 49-040-0 | 49-204 | | 31-063 | 31-063 | 31-068 |
| | 33-353 | | | | | 49-040-0 | | | 31-063 | 31-063 | 31-919 |
| 49-114 | 33-341 | | 49-036 | 49-305 | 36-102 | 49-040-0 | 49-204 | 36-027 | 31-063 | 31-063 | 31-068 |
| | 33-341 | | | | | 49-040-0 | 49-204 | | 31-063 | 31-063 | 31-068 |
| | | | | | | 49-040-0 | 49-204 | | | | |
| | | | | | | 49-040-0 | 49-204 | | | | |
| | | | | | | 49-040-0 | 49-204 | | | | |
| | 33-353 | | | | | 49-040-0 | | | 31-063 | 31-063 | 31-919 |
| | 33-353 | | | | | 49-040-0 | | | 31-063 | 31-063 | 31-919 |
| | 33-353 | | | | | 49-040-0 | | | 31-063 | 31-063 | 31-919 |
| | 33-353 | | 49-036 | | | 49-040-0 | | | 31-063 | 31-063 | 31-919 |
| | 33-353 | | 49-036 | | | 49-040-0 | | | 31-063 | 31-063 | 31-919 |
| | 33-353 | | | | | 49-040-0 | | | 31-063 | 31-063 | 31-919 |
| | 33-341 | | | | | 49-040-0 | 49-204 | | 31-063 | 31-063 | 31-068 |
| 49-114 | 33-341 | | 49-036 | | 36-102 | 49-040-0 | 49-204 | | 43-014 | 43-403 | 31-061 |
| 49-114 | 33-341 | | 49-036 | 49-305 | 36-102 | 49-040-0 | 49-204 | | 43-014 | 43-403 | 31-061 |
| 49-114 | 33-341 | | 49-036 | 49-305 | 36-102 | 49-040-0 | 49-204 | 36-027 | 31-063 | 31-063 | 31-068 |
| 49-114 | 33-341 | | 49-036 | 49-305 | 36-102 | 49-040-0 | 49-204 | 36-027 | 31-063 | 31-063 | 31-068 |
| | 33-341 | | | | | 49-040-0 | 49-204 | | 31-063 | 31-063 | 31-068 |
| | 33-341 | | | | | 49-040-0 | 49-204 | | 31-063 | 31-063 | 31-068 |
| | | | | | | 49-040-0 | 49-204 | | | | |
| | | | | | | 49-040-0 | 49-204 | | | | |
| | | | | | | 49-040-0 | 49-204 | | | | |
| | 33-341 | | | | | 49-040-0 | 49-204 | | 31-063 | 31-063 | 31-068 |
| | 33-353 | | | | | 49-040-0 | | | 31-063 | 31-063 | 31-919 |
| | 33-353 | | | | | 49-040-0 | | | 31-063 | 31-063 | 31-919 |
| | 33-353 | | | | | 49-040-0 | | | 31-063 | 31-063 | 31-919 |
| | 33-353 | | | | | 49-040-0 | | | 31-063 | 31-063 | 31-919 |
| | 33-353 | | | | | 49-040-0 | | | 31-063 | 31-063 | 31-919 |
| | 33-353 | | | | | 49-040-0 | | | 31-063 | 31-063 | 31-919 |
| | 33-341 | | | | | 49-040-0 | 49-204 | | 31-063 | 31-063 | 31-068 |
| 49-114 | 33-341 | | 49-036 | | 36-102 | 49-040-0 | 49-204 | | 43-014 | 43-403 | 31-061 |
| | 33-341 | | | | | 49-040-0 | 49-204 | | 43-014 | 43-403 | 31-061 |
| 49-114 | 33-341 | | 49-036 | 49-305 | 36-102 | 49-040-0 | 49-204 | 36-027 | 31-063 | 31-063 | 31-068 |
| | 33-341 | | | | | 49-040-0 | 49-204 | 36-027 | 31-063 | 31-063 | 31-068 |
| 49-114 | 33-341 | | 49-036 | 49-305 | 36-102 | 49-040-0 | 49-204 | 36-027 | 31-063 | 31-063 | 31-068 |
| | 33-353 | | 49-036 | | | 49-040-0 | | | 31-063 | 31-063 | |
| | 33-341 | | | | | 49-040-0 | | | | | |
| | 33-341 | | | | | 49-040-0 | 49-204 | | 31-063 | 31-063 | 31-068 |
| 49-114 | 33-341 | | 49-036 | 49-305 | 36-102 | 49-040-0 | 49-204 | | 43-014 | 43-403 | 31-061 |
| 49-114 | 33-341 | | 49-036 | 49-305 | 36-102 | 49-040-0 | 49-204 | | 43-014 | 43-403 | 31-061 |
| | 33-341 | | | | | 49-040-0 | 49-204 | 36-027 | 31-063 | 31-063 | 31-068 |
| | 33-341 | | | | | 49-040-0 | 49-204 | 36-027 | 31-063 | 31-063 | 31-068 |
| | 33-341 | | | | | 49-040-0 | 49-204 | | 31-063 | 31-063 | 31-068 |
| | | | | | | 49-040-0 | 49-204 | | | | |
| | | | | | | 49-040-0 | 49-204 | | | | |
| | 33-341 | | | | | 49-040-0 | 49-204 | | 31-063 | 31-063 | 31-068 |
| | 33-353 | | | | | | | | 31-063 | 31-063 | 31-919 |
| | 33-353 | | | | | 49-040-0 | | | 31-063 | 31-063 | 31-919 |
| | 33-353 | | | | | 49-040-0 | | | 31-063 | 31-063 | 31-919 |
| | 33-341 | | | | | 49-040-0 | 49-204 | | 31-063 | 31-063 | 31-068 |
| 49-114 | 33-341 | | 49-036 | | 36-102 | 49-040-0 | 49-204 | | 43-014 | 43-403 | 31-061 |
| 49-114 | 33-341 | | 49-036 | 49-305 | 36-102 | 49-040-0 | 49-204 | | 43-014 | 43-403 | 31-061 |
| | 33-341 | | | | | 49-040-0 | 49-204 | 36-027 | 31-063 | 31-063 | 31-068 |

# Briggs & Stratton Quick X-Reference

| Model | | Foam Air Cleaner | Cartridge | Pre-Cleaner | Air Cleaner Gasket | Carb. Mtg. Gasket | Manifold Gasket | Head Gasket #1 | Head Gasket #2 | Gasket Set | Valve Cover Gasket |
|---|---|---|---|---|---|---|---|---|---|---|---|
| 125K00 | | | 30-710 | 30-961 | | | | | | | |
| 125600 | | | 30-710 | 30-961 | | | | | | | |
| 125700 | | | 30-710 | 30-927 | 49-129 | 49-108 | | 50-543 | | | 49-132 |
| 126K00 | | | 30-710 | 30-961 | | | | | | | |
| 126L00 | | | 30-710 | 30-961 | | | | | | | |
| 126M00 | | | 30-710 | 30-961 | | | | | | | |
| 126T00 | | | 30-710 | 30-961 | | | | | | | |
| 126300 | High mount air filter | | 30-033 | 30-915 | | | | | | | |
| 126300 | Flat panel air filter | | 30-710 | 30-927 | | | | | | | |
| 126400 | | | 30-033 | 30-915 | | | | | | | |
| 126600 | | | 30-033 | 30-915 | | | | | | | |
| 126700 | | | 30-710 | 30-927 | 49-129 | 49-108 | | 50-543 | | | 49-132 |
| 126800 | | | 30-710 | 30-927 | 49-129 | 49-108 | | 50-543 | | | 49-132 |
| 127300 | | | 30-033 | 30-915 | | | | | | | |
| 127400 | | | 30-033 | 30-915 | | | | | | | |
| 127600 | | | | | | | | | | | |
| 127700 | | | 30-710 | 30-927 | 49-069 | 49-108 | | 50-543 | | | 49-132 |
| 127800 | | | 30-710 | 30-927 | 49-069 | 49-108 | | 50-543 | | | 49-132 |
| 127H00 | | | 30-710 | 30-961 | | | | | | | |
| 128300 | | | 30-033 | 30-915 | | | | | | | |
| 128400 | | | 30-033 | 30-915 | | | | | | | |
| 128600 | | | 30-033 | 30-915 | | | | | | | |
| 128700 | | | 30-710 | 30-927 | 49-069 | 49-108 | | 50-543 | | | 49-132 |
| 128800 | | | 30-710 | 30-927 | 49-069 | 49-108 | | 50-543 | | | 49-132 |
| 128H00 | | | 30-710 | 30-961 | | | | | | | |
| 128L00 | | | 30-710 | 30-961 | | | | | | | |
| 128M00 | | | 30-710 | 30-961 | | | | | | | |
| 128T00 | | | 30-710 | 30-961 | | | | | | | |
| 129600 | | | 30-033 | 30-915 | | | | | | | |
| 129700 | | | 30-710 | 30-927 | 49-069 | 49-108 | | 50-543 | | | 49-132 |
| 129800 | | | 30-710 | 30-927 | 49-069 | 49-108 | | 50-543 | | | 49-132 |
| 129H00 | | | 30-710 | 30-961 | | | | | | | |
| 13H100 | | | 30-173 | | | | | | | | |
| 13H300 | | | 30-173 | | | | | | | | |
| 13L100 | | | 30-173 | | | | | | | | |
| 13L300 | | | 30-173 | | | | | | | | |
| 130200 | 2300 or less, 5100-5199 | 30-906 | 30-094 | 30-923 | 49-131 | 49-355 | | 50-542 | | 50-410 | 49-107 |
| 130200 | 2900-4100, 5200-5600 | | 30-710 | 30-927 | 49-131 | 49-355 | | 50-542 | | 50-410 | 49-107 |
| 130400 | | | 30-094 | 30-923 | 49-131 | 49-355 | | 50-542 | | 50-410 | 49-107 |
| 130700 | | | 30-700 | 30-038 | 49-129 | 49-311 | | 50-542 | | 50-411 | 49-107 |
| 130900 | | 30-910 | 30-094 | 30-923 | 49-131 | 49-311 | | 50-542 | | 50-411 | 49-107 |
| 131200 | | 30-906 | 30-094 | 30-923 | 49-131 | 49-099 | | 50-542 | | 50-410 | 49-107 |
| 131400 | | | 30-094 | 30-923 | 49-131 | 49-355 | | 50-542 | | 50-410 | 49-107 |
| 131700 | | | 30-700 | 30-038 | 49-129 | 49-311 | | 50-542 | | 50-411 | 49-107 |
| 131900 | | | 30-094 | 30-923 | 49-131 | 49-311 | | 50-542 | | 50-411 | 49-107 |
| 132200 | 0100-0300, 2000-2200 | | 30-094 | 30-923 | 49-131 | 49-355 | | 50-542 | | 50-410 | 49-107 |
| 132200 | 0301-0499, 200-2299, 4000 or greater | | 30-710 | 30-927 | | 49-095 | | 50-542 | | 50-410 | 49-107 |
| 132400 | | | 30-094 | 30-923 | 49-131 | 49-355 | | 50-542 | | 50-410 | 49-107 |
| 132900 | | | 30-094 | 30-923 | 49-131 | 49-311 | | 50-542 | | 50-411 | 49-107 |
| 133200 | | | 30-310 | 30-927 | | 49-095 | | 50-542 | | 50-410 | 49-107 |
| 133400 | | | 30-735 | 30-928 | | 49-095 | | 50-542 | | | 49-107 |
| 133700 | | | 30-310 | 30-927 | 49-069 | 49-311 | | 50-542 | | | 49-107 |
| 134200 | | | 30-310 | 30-927 | | | | | | | |
| 134400 | | | 30-735 | 30-928 | | | | | | | |
| 135200 | | | 30-094 | 30-923 | | 49-095 | | 50-542 | | 50-410 | 49-107 |
| 135400 | | | 30-735 | 30-928 | | | | | | | |
| 135700 | | | 30-710 | 30-927 | 49-069 | 49-311 | | 50-542 | | | 49-107 |
| 136200 | | | 30-094 | 30-923 | | 49-095 | | 50-542 | | 50-410 | 49-107 |
| 137200 | | | 30-310 | 30-927 | | | | | | | |
| 138400 | | | 30-710 | 30-927 | | | | | | | |
| 14B900 | | | 30-172 | 30-181 | | | | | | | |
| 144201 | | | | | | | | | | | |
| 144402 | | | | | | | | | | | |
| 144701 | | | | | | | | | | | |
| 145201 | | | | | | | | | | | |
| 145401 | | | | | | | | | | | |
| 145701 | | | | | | | | | | | |
| 146400 | | 30-916 | 30-097 | | | | | | | | 49-112 |
| 146700 | | 30-909 | | | | | | | | | 49-112 |
| 147400 | | 30-913 | | | | | | | | | |
| 147700 | | 30-909 | | | | | | | | | |
| 15A100 | Powerbuilt snow | | | | | | | | | | |
| 15B100 | Intek snow | | | | | | | | | | |
| 152C100 | | | | | | | | | | | |
| 15D100 | | | | | | | | | | | |
| 15R100 | | | | | | | | | | | |

X

| Base Gasket | Igition Armature | Diaphragm | Float Valve | Carb. Overhaul | Rod | Mag Oil Seal | PTO Oil Seal | Rings-Std | Starter Pulley | Recoil Spring | Recoil Starter |
|---|---|---|---|---|---|---|---|---|---|---|---|
| | 33-341 | | | | | 49-040-0 | 49-204 | 36-027 | 31-063 | 31-063 | 31-068 |
| | 33-341 | | | | | 49-040-0 | 49-204 | | 31-063 | 31-063 | 31-068 |
| 49-114 | 33-341 | | 49-036 | | 36-102 | 49-040-0 | 49-204 | | 43-014 | 43-403 | 31-061 |
| | 33-341 | | | | | 49-040-0 | 49-204 | | 31-063 | 31-063 | 31-068 |
| | 33-341 | | | | | 49-040-0 | 49-204 | | 31-063 | 31-063 | 31-068 |
| | 33-341 | | | | | 49-040-0 | 49-204 | | 31-063 | 31-063 | 31-068 |
| | 33-341 | | | | | 49-040-0 | 49-204 | | 31-063 | 31-063 | 31-068 |
| | 33-353 | | 49-036 | | | 49-040-0 | | | 31-063 | 31-063 | 31-919 |
| | 33-353 | | 49-036 | | | 49-040-0 | | | 31-063 | 31-063 | 31-919 |
| | 33-353 | | | | | 49-040-0 | | | 31-063 | 31-063 | 31-919 |
| | 33-341 | | | | | 49-040-0 | 49-204 | | 31-063 | 31-063 | 31-068 |
| 49-114 | 33-341 | | 49-036 | 49-305 | 36-102 | 49-040-0 | 49-204 | | 43-014 | 43-403 | 31-061 |
| 49-114 | 33-341 | | 49-036 | 49-305 | 36-102 | 49-040-0 | 49-204 | | 43-014 | 43-403 | 31-061 |
| | 33-353 | | | | | 49-040-0 | | | 31-063 | 31-063 | 31-919 |
| | 33-353 | | | | | 49-040-0 | | | 31-063 | 31-063 | 31-919 |
| | 33-341 | | | | | 49-040-0 | 49-204 | | 31-063 | 31-063 | 31-068 |
| 49-114 | 33-341 | | 49-036 | 49-305 | 36-102 | 49-040-0 | 49-204 | 36-027 | 31-063<br>43-014 | 31-063<br>43-403 | 31-068<br>31-061 |
| 49-114 | 33-341 | | 49-036 | 49-305 | 36-102 | 49-040-0 | 49-204 | 36-027 | 31-063<br>43-014 | 31-063<br>43-403 | 31-068<br>31-061 |
| | 33-341 | | | | | | | | 31-063 | 31-063 | 31-068 |
| | 33-353 | | | | | 49-040-0 | | | 31-063 | 31-063 | 31-919 |
| | 33-353 | | | | | 49-040-0 | | | 31-063 | 31-063 | 31-919 |
| | 33-341 | | | | | 49-040-0 | | | 31-063 | 31-063 | 31-068 |
| 49-114 | 33-341 | | 49-036 | 49-305 | 36-102 | 49-040-0 | | 36-027 | 31-063<br>43-014 | 31-063<br>43-403 | 31-068<br>31-061 |
| 49-114 | 33-341 | | 49-036 | 49-305 | 36-102 | 49-040-0 | 49-204 | 36-027 | 31-063<br>43-014 | 31-063<br>43-403 | 31-068<br>31-061 |
| | 33-341 | | | | | 49-040-0 | 49-204 | | 31-063 | 31-063 | 31-068 |
| | 33-341 | | | | | 49-040-0 | 49-204 | | 31-063 | 31-063 | 31-068 |
| | 33-341 | | | | | 49-040-0 | 49-204 | | 31-063 | 31-063 | 31-068 |
| | 33-341 | | | | | 49-040-0 | 49-204 | | 31-063 | 31-063 | 31-068 |
| | 33-341 | | | | | 49-040-0 | 49-204 | | 31-063 | 31-063 | 31-068 |
| 49-114 | 33-341 | | 49-036 | 49-305 | 36-102 | 49-040-0 | 49-204 | 36-027 | 31-063<br>43-014 | 31-063<br>43-403 | 31-068<br>31-061 |
| 49-114 | 33-341 | | 49-036 | 49-305 | 36-102 | 49-040-0 | 49-204 | 36-027 | 31-063<br>43-014 | 31-063<br>43-403 | 31-068<br>31-061 |
| | 33-341 | | | | | 49-040-0 | 49-204 | 36-027 | 31-063 | 31-063 | 31-068 |
| | | | | | | 49-040-0 | 49-204 | | | | |
| | | | | | | 49-040-0 | 49-204 | | | | |
| | | | | | | 49-040-0 | 49-204 | | | | |
| | | | | | | 49-040-0 | 49-204 | | | | |
| 50-102 | 33-340 | 49-037 | | 49-078 | 36-100 | 49-040-0 | | | 43-200 | 43-400-0 | |
| 50-102 | 33-340 | 49-037 | | 49-078 | 36-100 | 49-040-0 | | | 43-200 | 43-400-0 | |
| 50-102 | 33-340 | | | | 36-100 | 49-040-0 | 49-060 | | 43-200 | 43-400-0 | |
| 50-102 | 33-340 | | 49-036 | 49-145 | 36-100 | 49-040-0 | 49-049 | | 43-200 | 43-400-0 | |
| 50-102 | 33-340 | 49-037 | | 49-076 | 36-100 | 49-040-0 | 49-049 | | 43-200 | 43-400-0 | |
| 50-102 | 33-340 | 49-037 | | 49-078 | 36-100 | 49-040-0 | | | 43-200 | 43-400-0 | |
| 50-102 | 33-340 | | | | 36-100 | 49-040-0 | | | 43-200 | 43-400-0 | |
| 50-103 | 33-340 | | 49-036 | 49-145 | 36-100 | 49-060 | 49-049 | | 43-200 | 43-400-0 | |
| 50-103 | 33-340 | 49-037 | | 49-076 | 36-100 | 49-040-0 | 49-049 | | 43-200 | 43-400-0 | |
| 50-102 | 33-340 | 49-037 | | 49-078 | 36-100 | 49-040-0 | 49-049 | | 43-200 | 43-400-0 | |
| 50-102 | 33-340 | 49-037 | | 49-078 | 36-100 | 49-040-0 | 49-049 | | 43-200 | 43-400-0 | |
| 50-102 | 33-340 | | 49-385 | | 36-100 | 49-040-0 | 49-049 | | 43-200 | 43-400-0 | |
| 50-103 | 33-340 | 49-037 | | 49-076 | 36-100 | 49-040-0 | 49-049 | | 43-200 | 43-400-0 | |
| 50-102 | 33-340 | 49-037 | | | 36-100 | 49-040-0 | 49-060 | | 43-014 | 43-403 | 31-062 |
| 50-102 | 33-340 | | 49-036 | 49-305 | 36-100 | 49-040-0 | 49-060 | | 43-014 | 43-403 | 31-062 |
| 50-103 | 33-340 | | 49-036 | 49-305 | 36-100 | 49-040-0 | 49-049 | | 43-014 | 43-403 | 31-062 |
| | 33-340 | | | | | 49-040-0 | | | 43-014 | 43-403 | 31-062 |
| | 33-340 | | | | | 49-040-0 | | | | | |
| 50-102 | 33-340 | 49-037 | | | 36-100 | 49-040-0 | 49-049 | 36-028 | 43-014 | 43-403 | 31-062 |
| | 33-340 | | | | | 49-040-0 | | | | | |
| 50-103 | 33-340 | | 49-036 | 49-305 | 36-100 | 49-040-0 | 49-049 | | 43-014 | 43-403 | 31-062 |
| 50-102 | 33-340 | 49-037 | | | 36-100 | 49-046 | 49-048 | 36-028 | 43-014 | 43-403 | 31-062 |
| | 33-340 | | | | | 49-040-0 | | 36-028 | 43-014 | 43-403 | 31-062 |
| 30-962 | | | | | | | | | | | |
| | | | | | | 49-040-0 | 49-204 | | | | |
| | 33-365 | | | | | | | | | | |
| | 33-365 | | | | | | | | | | |
| | 33-365 | | | | | | | | | | |
| | 33-365 | | | | | | | | | | |
| | 33-365 | | | | | | | | | | |
| | 33-365 | | | | | | | | | | |
| 50-104 | 33-365 | | | 49-693 | | 49-040-0 | 49-060 | | 43-200 | 43-400-0 | |
| 50-104 | 33-365 | | | 49-693 | | 49-040-0 | 49-060 | | 43-200 | 43-400-0 | |
| 50-104 | 33-365 | | | 49-693 | | 49-040-0 | 49-060 | | | 43-400-0 | |
| 50-104 | 33-365 | | | 49-693 | | 49-040-0 | 49-049 | | | 43-400-0 | |
| | 33-353 | | 49-036 | | | 49-040-0 | | | 31-063 | 31-063 | |
| | 33-353 | | 49-036 | | | 49-040-0 | | | 31-063 | 31-063 | |
| | 33-353 | | | | | 49-040-0 | | | | | |
| | 33-353 | | | | | 49-040-0 | | | | | |
| | 33-353 | | | | | 49-040-0 | | | | | |

X

# Briggs & Stratton Quick X-Reference

| Model | | Foam Air Cleaner | Cartridge | Pre-Cleaner | Air Cleaner Gasket | Carb. Mtg. Gasket | Manifold Gasket | Head Gasket #1 | Head Gasket #2 | Gasket Set | Valve Cover Gasket |
|---|---|---|---|---|---|---|---|---|---|---|---|
| 15T100 | | | 30-710 | 30-961 | | | | | | | |
| 15T200 | | | 30-710 | 30-961 | | | | | | | |
| 15Z100 | | | | | | | | | | | |
| 15Z300 | | | | | | | | | | | |
| 150100 | | | 30-710 | 30-961 | | | | | | | |
| 150200 | | | 30-710 | 30-961 | | | | | | | |
| 150300 | | | 30-710 | 30-961 | | | | | | | |
| 157100 | | | 30-710 | 30-961 | | | | | | | |
| 157200 | | | 30-710 | 30-961 | | | | | | | |
| 157300 | | | 30-710 | 30-961 | | | | | | | |
| 161400 | | | 30-731 | 30-928 | | | | | | | |
| 170400 | 0500-1999 | 30-913 | 30-097 | 30-920 | | 49-126 | | 50-541 | | 50-409 | 49-112 |
| 170400 | 2000 or greater | 30-916 | 30-097 | 30-920 | | 49-126 | | 50-541 | | 50-409 | 49-112 |
| 170700 | | 30-909 | 30-106 | | | 49-098 | | 50-541 | | 50-409 | 49-112 |
| 171400 | | | 30-097 | 30-920 | | 49-126 | | 50-541 | | 50-409 | 49-112 |
| 171700 | | 30-909 | | | | | | 50-541 | | | |
| 176400 | | | 30-028 | 30-928 | | | | 50-541 | | | 49-112 |
| 185400 | | | 30-762 | 30-962 | | | | | | | |
| 187400 | | | 30-762 | 30-962 | | | | | | | |
| 19A400 | | | 30-028 | 30-928 | | | | | | | |
| 19B400 | | | 30-028 | 30-928 | | | | 50-541 | | | 49-112 |
| 19C400 | | | 30-028 | 30-928 | | | | | | | |
| 19E400 | | | 30-028 | 30-928 | | | | 50-541 | | | 49-112 |
| 19F400 | | | 30-028 | 30-928 | | | | 50-541 | | | 49-112 |
| 19G400 | | | 30-028 | 30-928 | | | | 50-541 | | | 49-112 |
| 19H100 | | | | | | | | | | | |
| 19H200 | | | | | | | | | | | |
| 19K400 | | | 30-028 | 30-928 | | | | | | | |
| 19L100 | | | | | | | | | | | |
| 19L200 | | | | | | | | | | | |
| 190400 | 0010-2100 | 30-916 | 30-097 | 30-920 | | 49-126 | | 50-541 | | 50-409 | 49-112 |
| 190400 | 2500 or greater | | 30-097 | 30-920 | | 49-126 | | 50-541 | | 50-409 | 49-112 |
| 190700 | | 30-909 | 30-106 | | | 49-098 | | 50-541 | | 50-409 | 49-112 |
| 191400 | | 30-916 | | | | | | | | | |
| 191700 | | 30-909 | 30-106 | | | 49-098 | | 50-541 | | 50-409 | 49-112 |
| 192400 | | | 30-028 | 30-928 | | | | 50-541 | | | 49-112 |
| 192700 | | 30-909 | 30-106 | | | | | 50-541 | | 50-409 | 49-112 |
| 193400 | | 30-916 | | | | | | | | | |
| 193700 | | 30-909 | 30-106 | | | | | 50-541 | | 50-409 | 49-112 |
| 194400 | | | 30-044 | 30-920 | | 49-126 | | 50-541 | | 50-409 | 49-112 |
| 194700 | | 30-960 | 30-048 | 30-926 | | | | 50-541 | | 50-409 | 49-112 |
| 195400 | 0100-0400, 2000-2099 | | 30-044 | 30-920 | | 49-126 | | 50-541 | | 50-409 | 49-112 |
| 195400 | 0600-1999, 2100 or greater | | 30-044 | 30-920 | | 49-126 | | 50-541 | | 50-409 | 49-112 |
| 195700 | | 30-960 | 30-048 | 30-926 | | | | 50-541 | | 50-409 | 49-112 |
| 196400 | | | 30-028 | 30-928 | | | | 50-541 | | | 49-112 |
| 196700 | | 30-960 | 30-048 | 30-926 | | | | 50-541 | | 50-409 | 49-112 |
| 197400 | | | 30-028 | 30-928 | | | | | | | |
| 197700 | | | 30-048 | 30-926 | | | 49-119 | | | | |
| 198700 | | | 30-048 | 30-926 | | | 49-119 | | | | |
| 20A113 | | | | | | | | | | | |
| 20A400 | Intek snow | | | | | | | | | | |
| 20B400 | | | | | | | | | | | |
| 20C100 | | | | | | | | | | | |
| 20D400 | Intek snow | | | | | | | | | | |
| 20E300 | | | | | | | | | | | |
| 20F400 | Intek snow | | | | | | | | | | |
| 20G400 | | | | | | | | | | | |
| 20H100 | | | 30-310 | 30-927 | | | | | | | |
| 20H200 | | | 30-310 | 30-927 | | | | | | | |
| 20L100 | | | 30-310 | 30-927 | | | | | | | |
| 20L200 | | | 30-310 | 30-927 | | | | | | | |
| 20M100 | | | | | | | | | | | |
| 20M200 | | | | | | | | | | | |
| 20M300 | | | | | | | | | | | |
| 20M400 | | | | | | | | | | | |
| 20P200 | | | | | | | | | | | |
| 20P400 | | | | | | | | | | | |
| 20S100 | | | 30-310 | 30-927 | | | | | | | |
| 20S200 | | | 30-310 | 30-927 | | | | | | | |
| 20T100 | | | 30-310 | 30-927 | | | | | | | |
| 20T200 | | | 30-310 | 30-927 | | | | | | | |
| 20X300 | | | | | | | | | | | |
| 200400 | | 30-916 | | | | | | 50-106 | | | 49-112 |
| 201300 | | | 30-310 | 30-927 | | | | | | | |
| 201400 | Powerbuilt | | 30-710 | 30-927 | 50-442 | | | | | | |
| 202300 | | | 30-310 | 30-927 | | | | | | | |
| 202400 | Flat panel air filter | | 30-710 | 30-927 | 50-442 | | | | | | |
| 202400 | High mount air filter | | 30-135 | 30-976 | | | | | | | |
| 203400 | Flat panel air filter | | 30-710 | 30-927 | 50-442 | | | | | | |
| 203400 | High mount air filter | | 30-135 | 30-976 | | | | | | | |
| 204300 | | | 30-310 | 30-927 | | | | | | | |
| 204400 | | | 30-710 | 30-927 | 50-442 | | | | | | |

# Briggs & Stratton Quick X-Reference

| Base Gasket | Igition Armature | Diaphragm | Float Valve | Carb. Overhaul | Rod | Mag Oil Seal | PTO Oil Seal | Rings-Std | Starter Pulley | Recoil Spring | Recoil Starter |
|---|---|---|---|---|---|---|---|---|---|---|---|
| | 33-353 | | | | | 49-040-0 | | | 31-063 | 31-063 | 31-919 |
| | 33-353 | | | | | 49-040-0 | | | 31-063 | 31-063 | 31-919 |
| | 33-353 | | | | | 49-040-0 | | | | | |
| | 33-353 | | | | | 49-040-0 | | | | | |
| | 33-353 | | 49-036 | | | 49-040-0 | | | 31-063 | 31-063 | 31-919 |
| | 33-353 | | | | | 49-040-0 | | | 31-063 | 31-063 | 31-919 |
| | 33-353 | | | | | 49-040-0 | | | 31-063 | 31-063 | 31-919 |
| | 33-353 | | | | | 49-040-0 | | | 31-063 | 31-063 | 31-919 |
| | 33-353 | | | | | 49-040-0 | | | 31-063 | 31-063 | 31-919 |
| | 33-353 | | | | | 49-040-0 | | | 31-063 | 31-063 | 31-919 |
| | 33-347 | | | | | | | | | | |
| 50-104 | 33-365 | | 49-033 | 49-693 | | 49-046 | 49-045 | | 43-200 | 43-400-0 | |
| 50-104 | 33-344 | | 49-033 | 49-693 | | 49-046 | 49-045 | | 31-063 | 31-063 | 31-065 |
| 50-104 | 33-365 | | 49-033 | 49-102 | | 49-046 | 49-045 | | 31-063 | 31-063 | 31-065 |
| 50-104 | 33-344 | | 49-033 | 49-693 | | 49-046 | 49-045 | | 31-063 | 31-063 | 31-065 |
| 50-104 | 33-365 | | 49-033 | 49-102 | | 49-046 | 49-045 | | 31-063 | 31-063 | 31-065 |
| 50-104 | 33-344 | | | 49-148 | | 49-045 | 49-045 | | 31-063 | 31-063 | 31-065 |
| | 33-365 | | 49-361 | | | | | | | | |
| | | | | | | | | | | | |
| | 33-347 | | | | | | | | 31-063 | 31-063 | 31-065 |
| 50-104 | 33-347 | | | 49-148 | 36-103 | 49-045 | 49-045 | | 31-063 | 31-063 | 31-065 |
| | 33-347 | | | | | | | | | | |
| 50-104 | 33-347 | | | | 36-103 | 49-045 | 49-045 | | 31-063 | 31-063 | 31-065 |
| 50-104 | 33-347 | | | | 36-103 | 49-045 | 49-045 | | 31-063 | 31-063 | 31-065 |
| 50-104 | 33-347 | | | | 36-103 | 49-045 | 49-045 | | 31-063 | 31-063 | 31-065 |
| | 33-347 | | | | | | | | | | |
| | 33-347 | | | | | | | | | | |
| | 33-344 | | | | | | | | 31-063 | 31-063 | 31-065 |
| | 33-347 | | | | | | | | | | |
| | 33-347 | | | | | | | | | | |
| 50-104 | 33-365 | | 49-033 | 49-693 | 36-103 | 49-046 | 49-045 | | 43-200 | 43-400-0 | |
| 50-104 | 33-344 | | 49-033 | | 36-103 | 49-046 | 49-045 | | 31-063 | 31-063 | 31-065 |
| 50-104 | 33-344 | | 49-033 | 49-102 | 36-103 | 49-046 | 49-045 | | 31-063 | 31-063 | 31-065 |
| | | | | | | | | | | | |
| 50-104 | 33-344 | | 49-033 | 49-102 | 36-103 | 49-046 | 49-045 | | 31-063 | 31-063 | 31-065 |
| 50-104 | 33-344 | | | 49-148 | 36-103 | 49-045 | 49-045 | | 31-063 | 31-063 | 31-065 |
| 50-104 | 33-344 | | 49-033 | 49-102 | 36-103 | 49-046 | 49-045 | | 31-063 | 31-063 | 31-065 |
| | 33-365 | | | | | | | | | | |
| 50-104 | 33-344 | | 49-033 | 49-102 | 36-103 | 49-046 | 49-045 | | 31-063 | 31-063 | 31-065 |
| 50-104 | 33-344 | | 49-033 | | 36-103 | 49-046 | 49-045 | | 31-063 | 31-063 | 31-065 |
| 50-104 | 33-344 | | | 49-147 | 36-103 | 49-046 | 49-045 | | 31-063 | 31-063 | 31-065 |
| 50-104 | 33-344 | | 49-033 | 49-693 | 36-103 | 49-046 | 49-045 | | 43-200 | 43-400-0 | |
| 50-104 | 33-344 | | 49-033 | 49-693 | 36-103 | 49-046 | 49-045 | | 31-063 | 31-063 | 31-065 |
| 50-104 | 33-344 | | | 49-147 | 36-103 | 49-046 | 49-045 | | 31-063 | 31-063 | 31-065 |
| 50-104 | 33-344 | | | 49-148 | 36-103 | 49-045 | 49-045 | | 31-063 | 31-063 | 31-065 |
| 50-104 | 33-344 | | | 49-147 | 36-103 | 49-046 | 49-045 | | 31-063 | 31-063 | 31-065 |
| | 33-344 | | | | | | | | 31-063 | 31-063 | 31-065 |
| | 33-344 | | | 49-147 | | | | | 31-063 | 31-063 | 31-065 |
| | 33-344 | | | 49-147 | | | | | 31-063 | 31-063 | 31-065 |
| | 33-347 | | | | | | | | | | |
| | 33-347 | | | | | 49-045 | 49-045 | | 31-063 | 31-063 | |
| | 33-347 | | | | | | | | | | |
| | 33-347 | | | | | | | | | | |
| | 33-347 | | | | | 49-045 | 49-045 | | 31-063 | 31-063 | |
| | 33-347 | | | | | | | | | | |
| | 33-347 | | | | | 49-045 | 49-045 | | 31-063 | 31-063 | |
| | 33-347 | | | | | | | | | | |
| | 33-347 | | | | | | | | | | |
| | 33-347 | | | | | | | | | | |
| | 33-347 | | | | | | | | | | |
| | 33-347 | | | | | | | | | | |
| | 33-347 | | | | | | | | | | |
| | 33-347 | | | | | | | | | | |
| | 33-347 | | | | | | | | | | |
| | 33-347 | | | | | | | | | | |
| | 33-347 | | | | | | | | | | |
| | 33-347 | | | | | | | | | | |
| | 33-347 | | | | | | | | | | |
| | 33-347 | | | | | | | | | | |
| 50-106 | 33-365 | | 49-033 | 49-693 | | 49-045 | 49-045 | | 43-200 | 43-400-0 | |
| | 33-347 | | | | | | | | | | |
| | 33-347 | | | | | 49-045 | 49-045 | | 31-063 | 31-063 | |
| | 33-347 | | | | | | | | | | |
| | 33-347 | | | | | 49-045 | 49-045 | | 31-063 | 31-063 | |
| | 33-347 | | | | | 49-045 | 49-045 | | 31-063 | 31-063 | |
| | 33-347 | | | | | 49-045 | 49-045 | | 31-063 | 31-063 | |
| | 33-347 | | | | | 49-045 | 49-045 | | 31-063 | 31-063 | |
| | 33-347 | | | | | | | | | | |
| | 33-347 | | | | | 49-045 | 49-045 | | 31-063 | 31-063 | 31-068 |

# Briggs & Stratton Quick X-Reference

| Model | | Foam Air Cleaner | Cartridge | Pre-Cleaner | Air Cleaner Gasket | Carb. Mtg. Gasket | Manifold Gasket | Head Gasket #1 | Head Gasket #2 | Gasket Set | Valve Cover Gasket |
|---|---|---|---|---|---|---|---|---|---|---|---|
| 205300 | | | 30-310 | 30-927 | | | | | | | |
| 205400 | Flat panel air filter | | 30-710 | 30-927 | 50-442 | | | | | | |
| 205400 | High mount air filter | | 30-135 | 30-976 | | | | | | | |
| 206400 | Intek pro | | 30-135 | 30-976 | | | | | | | |
| 207400 | | | | | | | | | | | |
| 21A100 | | | | | | | | | | | |
| 21A400 | | | | | | | | | | | |
| 21A700 | | | 30-073 | 30-077 | | | | 50-435 | | | |
| 21A800 | | | 30-073 | 30-077 | | | | 50-435 | | | |
| 21A900 | | | 30-073 | 30-077 | | | | 50-435 | | | |
| 21B400 | | | | | | | | | | | |
| 21B700 | | | 30-073 | 30-077 | | | | | | | |
| 21B800 | | | 30-073 | 30-077 | | | | 50-435 | | | |
| 21B900 | Intek | | 30-073 | 30-077 | | | | 50-435 | | | |
| 21C100 | | | | | | | | | | | |
| 21C200 | | | | | | | | | | | |
| 21C300 | | | | | | | | | | | |
| 21D800 | | | 30-852 | | | | | | | | |
| 21M100 | | | | | | | | | | | |
| 21M200 | | | | | | | | | | | |
| 21M300 | | | | | | | | | | | |
| 21M400 | | | | | | | | | | | |
| 21P214 | | | | | | | | | | | |
| 21R500 | | | | | | | | | | | |
| 21R600 | | | | | | | | | | | |
| 21R700 | | | | | | | | | | | |
| 21R800 | | | | | | | | | | | |
| 21S100 | | | 30-310 | 30-927 | | | | | | | |
| 21S200 | | | 30-310 | 30-927 | | | | | | | |
| 21T100 | | | 30-310 | 30-927 | | | | | | | |
| 21T200 | | | 30-310 | 30-927 | | | | | | | |
| 21X300 | | | | | | | | | | | |
| 21Z100 | | | | | | | | | | | |
| 21Z300 | | | | | | | | | | | |
| 210300 | | | 30-310 | 30-927 | | | | | | | |
| 210400 | Flat panel air filter | | 30-710 | 30-927 | 50-442 | | | | | | |
| 210400 | High mount air filter | | 30-135 | 30-976 | | | | | | | |
| 210700 | | | 30-073 | 30-077 | | | | 50-435 | | | |
| 210800 | | | 30-073 | 30-077 | | | | 50-435 | | | |
| 212300 | | | 30-310 | 30-927 | | | | | | | |
| 212400 | | | 30-310 | 30-927 | | | | | | | |
| 212700 | | | 30-073 | 30-077 | | | | 50-435 | | | |
| 212800 | | | 30-073 | 30-077 | | | | 50-435 | | | |
| 212900 | | | 30-073 | 30-077 | | | | 50-435 | | | |
| 213400 | | | 30-310 | 30-927 | | | | | | | |
| 214700 | | | 30-073 | 30-077 | | | | 50-435 | | | |
| 214900 | | | 30-073 | 30-077 | | | | 50-435 | | | |
| 215700 | Powerbuilt | | 30-073 | 30-077 | | | | 50-435 | | | 49-161 |
| 215800 | | | 30-073 | 30-077 | | | | 50-435 | | | |
| 215900 | Intek | | 30-073 | 30-077 | | | | 50-435 | | | |
| 216100 | | | | | | | | | | | |
| 216300 | | | 30-310 | 30-927 | | | | | | | |
| 216700 | | | 30-073 | 30-077 | | | | | | | |
| 216800 | | | 30-073 | 30-077 | | | | | | | |
| 216900 | | | 30-073 | 30-077 | | | | 50-435 | | | |
| 217300 | | | 30-310 | 30-927 | | | | | | | |
| 217700 | | | 30-073 | 30-077 | | | | | | | |
| 217800 | | | 30-073 | 30-077 | | | | 50-435 | | | |
| 217900 | Intek | | 30-073 | 30-077 | | | | 50-435 | | | |
| 218700 | | | 30-073 | 30-077 | | | | 50-435 | | | |
| 218800 | | | 30-073 | 30-077 | | | | | | | |
| 219700 | Powerbuilt | | 30-073 | 30-077 | | | | 50-435 | | | |
| 219800 | | | 30-073 | 30-077 | | | | 50-435 | | | |
| 219900 | | | 30-073 | 30-077 | | | | 50-435 | | | |
| 220400 | | | 30-044 | 30-920 | | | | 50-025 | | | 49-112 |
| 220700 | | 30-911 | 30-105 | | 49-410 | | | 50-025 | | 49-412 | 49-112 |
| 221400 | | | 30-044 | 30-920 | | | | 50-025 | | | 49-112 |
| 222400 | | | 30-044 | 30-920 | | | | 50-025 | | | 49-112 |
| 226400 | | | 30-028 | 30-928 | | | | 50-025 | | | 49-112 |
| 231400 | | 30-916 | | | | | | | | | |
| 233400 | 0010-0350 | 30-916 | 30-916 | | | 49-118 | | | | | 49-112 |
| 233400 | 0500 or greater | 30-916 | 30-044 | 30-920 | | 49-118 | | | | | 49-112 |
| 235400 | | | 30-762 | 30-962 | | | | | | | |
| 243400 | | 30-916 | 30-044 | 30-920 | | 49-118 | | | | | 49-112 |
| 245400 | | | 30-762 | 30-962 | | | | | | | |
| 246400 | | | 30-310 | 30-927 | | | | | | | |
| 247400 | | | 30-762 | 30-962 | | | | | | | |
| 250400 | | | 30-028 | 30-928 | | | | | | | |
| 251400 | | | 30-044 | 30-920 | | | | 50-025 | | | 49-112 |
| 251700 | | 30-911 | | | | | | 50-025 | | | 49-112 |
| 252400 | | | 30-044 | 30-920 | | | | 50-025 | | | 49-112 |

X

| Base Gasket | Igition Armature | Diaphragm | Float Valve | Carb. Overhaul | Rod | Mag Oil Seal | PTO Oil Seal | Rings-Std | Starter Pulley | Recoil Spring | Recoil Starter |
|---|---|---|---|---|---|---|---|---|---|---|---|
| | 33-347 | | | | | | | | | | |
| | 33-347 | | | | | 49-045 | 49-045 | | 31-063 | 31-063 | 31-068 |
| | 33-347 | | | | | 49-045 | 49-045 | | 31-063 | 31-063 | 31-068 |
| | 33-347 | | | | | 49-045 | 49-045 | | 31-063 | 31-063 | |
| | 33-347 | | | | | | | | | | |
| | 33-347 | | | | | | | | | | |
| | 33-347 | | | | | | | | | | |
| | 33-347 | | | | | 49-045 | | | | | |
| | 33-347 | | | | | 49-045 | | | | | |
| | 33-347 | | | | | 49-045 | | | | | |
| | 33-347 | | | | | | | | | | |
| | 33-347 | | | | | | | | | | |
| | 33-347 | | | | | 49-045 | | | | | |
| | 33-347 | | | | | 49-045 | | | | | |
| | 33-347 | | | | | | | | | | |
| | 33-347 | | | | | | | | | | |
| | 33-347 | | | | | | | | | | |
| | | | | | | | | | | | |
| | 33-347 | | | | | | | | | | |
| | 33-347 | | | | | | | | | | |
| | 33-347 | | | | | | | | | | |
| | 33-347 | | | | | | | | | | |
| | 33-347 | | | | | | | | | | |
| | 33-347 | | | | | | | | | | |
| | 33-347 | | | | | | | | | | |
| | 33-347 | | | | | | | | | | |
| | 33-347 | | | | | | | | | | |
| | 33-347 | | | | | | | | | | |
| | 33-347 | | | | | | | | | | |
| | 33-347 | | | | | | | | | | |
| | 33-347 | | | | | | | | | | |
| | 33-347 | | | | | | | | | | |
| | 33-347 | | | | | | | | | | |
| | 33-347 | | | | | 49-045 | 49-045 | | 31-063 | 31-063 | |
| | 33-347 | | | | | 49-045 | 49-045 | | 31-063 | 31-063 | |
| | 33-347 | | | | | 49-045 | | | | | |
| | 33-347 | | | | | 49-045 | | | | | |
| | 33-347 | | | | | | | | | | |
| | 33-347 | | | | | | | | | | |
| | 33-347 | | | | | 49-045 | | | | | |
| | 33-347 | | | | | 49-045 | | | | | |
| | 33-347 | | | | | 49-045 | | | | | |
| | 33-347 | | | | | | | | | | |
| | 33-347 | | | | | 49-045 | | | | | |
| | 33-347 | | | | | 49-045 | | | | | |
| | 33-347 | | 49-210 Walbro | | | 49-045 | | | | | |
| | 33-347 | | | | | 49-045 | | | | | |
| | 33-347 | | | | | 49-045 | | | | | |
| | 33-347 | | | | | | | | | | |
| | 33-347 | | | | | | | | | | |
| | 33-347 | | | | | | | | | | |
| | 33-347 | | | | | | | | | | |
| | 33-347 | | | | | 49-045 | | | | | |
| | 33-347 | | | | | | | | | | |
| | 33-347 | | | | | | | | | | |
| | 33-347 | | | | | 49-045 | | | | | |
| | 33-347 | | | | | 49-045 | | | | | |
| | 33-347 | | | | | 49-045 | | | | | |
| | 33-347 | | | | | | | | | | |
| | 33-347 | | | | | 49-045 | | | | | |
| | 33-347 | | | | | 49-045 | | | | | |
| | 33-347 | | | | | 49-045 | | | | | |
| | 33-344 | | 49-033 | 49-071 | | 49-045 | 49-047 | 36-005 | 31-063 | 31-063 | 31-065 |
| 50-105 | 33-344 | | 49-033 | 49-102 | | 49-045 | 49-047 | 36-005 | 31-063 | 31-063 | 31-065 |
| | 33-344 | | 49-033 | 49-071 | | 49-045 | 49-047 | 36-005 | 31-063 | 31-063 | 31-065 |
| | 33-344 | | 49-033 | 49-071 | | 49-045 | 49-047 | 36-005 | 43-200 | 43-400-0 | |
| | 33-344 | | | | | 49-045 | 49-047 | | 31-063 | 31-063 | 31-065 |
| | 33-344 | | | 49-693 | | 49-045 | 49-045 | | 43-200 | 43-400-0 | |
| | 33-344 | | 49-033 | 49-693 | | 49-040-0 | 49-045 | | | 43-400-0 | |
| | 33-344 | | 49-033 | 49-693 | | 49-040-0 | 49-045 | | | 43-400-0 | |
| | 33-347 | | | | | 49-047 | 49-047 | | | | |
| | 33-344 | | 49-033 | 49-071 | | 49-040-0 | 49-047 | | | 43-400-0 | |
| | 33-347 | | | | | 49-047 | 49-047 | | | | |
| | 33-347 | | | | | | | | | | |
| | 33-347 | | | | | | | | | | |
| | 33-344 | | | | | | | | 31-063 | 31-063 | 31-065 |
| | 33-344 | | 49-033 | 49-071 | 36-104 | 49-045 | 49-047 | 36-005 | 31-063 | 31-063 | 31-065 |
| 50-105 | 33-344 | | | 49-102 | 36-104 | 49-045 | 49-047 | 36-005 | 31-063 | 31-063 | 31-065 |
| 50-105 | 33-344 | | 49-033 | 49-071 | 36-104 | 49-045 | 49-047 | 36-005 | 31-063 | 31-063 | 31-065 |

X

# Briggs & Stratton Quick X-Reference

| Model | | Foam Air Cleaner | Cartridge | Pre-Cleaner | Air Cleaner Gasket | Carb. Mtg. Gasket | Manifold Gasket | Head Gasket #1 | Head Gasket #2 | Gasket Set | Valve Cover Gasket |
|---|---|---|---|---|---|---|---|---|---|---|---|
| 252700 | | 30-911 | 30-105 | | 49-410 | | | 50-025 | | 49-412 | 49-112 |
| 253400 | | | | | | | | | | | 49-112 |
| 253700 | | 30-911 | 30-105 | 90-924 | 49-410 | | | 50-025 | | 49-412 | 49-112 |
| 254400 | | | 30-044 | 30-920 | | | | 50-025 | | | 49-112 |
| 254700 | | 30-960 | | | | | | 50-025 | | 49-412 | 49-112 |
| 255400 | | | | | | | | | | | 49-112 |
| 255700 | | 30-911 | | | 49-410 | | | 50-025 | | 49-412 | 49-112 |
| 256400 | | | 30-028 | 30-928 | | | | 50-025 | | | 49-112 |
| 256700 | | 30-911 | 30-105 | 30-924 | 49-410 | 49-119 | | 50-025 | | 49-412 | 49-112 |
| 257400 | | | 30-028 | 30-928 | | | | | | | |
| 257700 | | 30-960 | 30-048 | 30-926 | | 50-443 | 49-119 | 50-025 | | 49-412 | 49-112 |
| 258700 | | 30-960 | | | | 50-443 | 49-119 | 50-025 | | 49-412 | 49-112 |
| 259700 | | | 30-048 | 30-926 | | 50-443 | 49-119 | 50-025 | | 49-412 | 49-112 |
| 260700 | | | 30-134 | 30-444 | | | | | | | |
| 261700 | | | 30-134 | 30-444 | | | | | | | |
| 28A700 | | | 30-048 | 30-926 | | 50-443 | 49-119 | 50-025 | | 50-412 | 49-112 |
| 28B700 | | | 30-048 | 30-926 | | 50-443 | 49-119 | 50-025 | | 50-412 | 49-112 |
| 28C700 | | | 30-048 | 30-926 | | 50-443 | 49-119 | 50-025 | | 50-412 | 49-112 |
| 28D700 | | | 30-048 | 30-926 | | 50-443 | 49-119 | 50-025 | | 50-412 | 49-112 |
| 28E700 | | | 30-049 | 30-925 | | 50-443 | 49-119 | | | 50-412 | |
| 28M700 | | | 30-049 | 30-925 | | 50-443 | 49-119 | 50-025 | | 50-412 | 49-112 |
| 28N700 | | | 30-049 | 30-925 | | 50-443 | 49-119 | 50-435 | | | |
| 28P700 | | | 30-049 | 30-925 | | 50-443 | 49-119 | 50-435 | | | |
| 28Q700 | | | 30-049 | 30-925 | | 50-443 | 49-119 | 50-435 | | | |
| 28R700 | | | 30-049 | 30-925 | | 50-443 | 49-119 | 50-435 | | | |
| 28S700 | | | 30-049 | 30-925 | | 50-443 | 49-119 | 50-435 | | | |
| 28T700 | | | 30-049 | 30-925 | | 50-443 | 49-119 | 50-435 | | | |
| 28U700 | | | 30-049 | 30-925 | | 50-443 | 49-119 | 50-435 | | | |
| 28V700 | | | 30-049 | 30-925 | | 50-443 | 49-119 | 50-435 | | | |
| 28W700 | | | 30-049 | 30-925 | | | | | | | |
| 280H00 | Intek I/C | | 30-074 (non-washable)<br>30-122 (washable) | 30-076 | | 49-165 | | 50-435 | | | 49-161 |
| 280J00 | | | 30-074 (non-washable)<br>30-122 (washable) | 30-076 | | | | | | | |
| 280700 | | | 30-107 | 30-924 | 49-410 | 49-119 | | 50-025 | | 50-412 | 49-112 |
| 281H00 | | | 30-074 (non-washable)<br>30-122 (washable) | 30-076 | | | | | | | |
| 281700 | | | 30-107 | 30-924 | 49-410 | 49-119 | | 50-025 | | 50-412 | 49-112 |
| 282H00 | | | 30-074 (non-washable)<br>30-122 (washable) | 30-076 | | | | | | | |
| 282700 | | | 30-049 | 30-925 | | | | 50-025 | | 50-412 | 49-112 |
| 283H00 | | | 30-074 (non-washable)<br>30-122 (washable) | 30-076 | | | | | | | |
| 283700 | | | 30-049 | 30-925 | | | | 50-025 | | 50-412 | 49-112 |
| 284H00 | | | 30-074 (non-washable)<br>30-122 (washable) | 30-076 | | | | | | | |
| 284700 | | | 30-049 | 30-925 | | | | 50-025 | | 50-412 | 49-112 |
| 28Ch00 | Extende life | | 30-122 | 30-076 | | 49-165 | | 50-435 | | | 49-161 |
| 285H00 | Intek I/C | | 30-074 (non-washable)<br>30-122 (washable) | 30-076 | | 49-165 | | 50-435 | | | 49-161 |
| 285700 | | | 30-049 | 30-925 | | | | 50-025 | | 50-412 | 49-112 |
| 286H00 | | | 30-074 (non-washable)<br>30-122 (washable) | 30-076 | | | | | | | |
| 286700 | | | 30-049 | 30-925 | | | | 50-025 | | 50-412 | 49-112 |
| 287700 | | | 30-049 | 30-925 | | | | | | | |
| 288700 | | | 30-049 | 30-925 | | | | 50-025 | | 50-412 | 49-112 |
| 289700 | | | 30-049 | 30-925 | | | | 50-025 | | 50-412 | 49-112 |
| 290400 | | | 30-044 | 30-920 | | | | | | | |
| 290700 | | | 30-101 round<br>30-736 rectangle | 30-929 round<br>30-450 rectangle | | | | | | | |
| 294400 | | | 30-044 | 30-920 | | | 50-439 | | | | |
| 294700 | | | 30-101 round<br>30-736 rectangle | 30-929 round<br>30-450 rectangle | | | 50-439 | | | | |
| 295347 | | | 30-101 | 30-929 | | | | | | | |
| 295400 | | | 30-101 | 30-929 | | | | | | | |
| 295700 | | | 30-101 | 30-929 | | | | | | | |
| 296400 | | | 30-101 | 30-929 | | | | | | | |
| 297300 | | | 30-101 | 30-929 | | | | | | | |
| 297400 | | | 30-101 | 30-929 | | | | | | | |
| 300400 | | 30-916 | | | | 49-118 | | | | | 49-112 |
| 301400 | | | 30-044 | 30-920 | | | | | | | |
| 302400 | | | 30-044 | 30-920 | | 49-118 | | | | | 49-112 |
| 303400 | | | 30-044 | 30-920 | | | | | | | |
| 303700 | | | 30-101 round<br>30-736 rectangle | 30-929 round<br>30-450 rectangle | | | | | | | |
| 304400 | | | 30-101 | 30-929 | | | | | | | |
| 305400 | | | 30-101 | 30-929 | | | 50-439 | 49-173 | 49-173 | | 49-172 |
| 305700 | | | 30-101 round<br>30-736 rectangle | 30-929 round<br>30-450 rectangle | | | 50-439 | 49-173 | 49-173 | | 49-172 |
| 309400 | | | 30-101 | 30-929 | | | | | | | |
| 31A500 | | | 30-074 (non-washable)<br>30-122 (washable) | 30-076 | | | | | | | |
| 31A600 | | | 30-074 (non-washable)<br>30-122 (washable) | 30-076 | | | | | | | |

# Briggs & Stratton Quick X-Reference

| Base Gasket | Igition Armature | Diaphragm | Float Valve | Carb. Overhaul | Rod | Mag Oil Seal | PTO Oil Seal | Rings-Std | Starter Pulley | Recoil Spring | Recoil Starter |
|---|---|---|---|---|---|---|---|---|---|---|---|
| 50-105 | 33-344 | | 49-033 | 49-102 | 36-104 | 49-045 | 49-047 | 36-005 | 31-063 | 31-063 | 31-065 |
| 50-105 | 33-344 | | 49-033 | | 36-104 | 49-045 | 49-047 | 36-005 | 31-063 | 31-063 | 31-065 |
| 50-105 | 33-344 | | 49-033 | 49-102 | 36-104 | 49-045 | 49-047 | 36-022 | 31-063 | 31-063 | 31-065 |
| | 33-344 | | 49-033 | 49-989 | 36-104 | 49-045 | 49-047 | 36-022 | 31-063 | 31-063 | 31-065 |
| 50-105 | 33-344 | | | | 36-104 | 49-045 | 49-047 | 36-005 | 31-063 | 31-063 | 31-065 |
| | 33-344 | | 49-033 | | 36-104 | 49-045 | 49-047 | 36-022 | 43-200 | 43-400-0 | |
| 50-105 | 33-347 | | 49-033 | 49-102 | 36-104 | 49-045 | 49-047 | 36-005 | 31-063 | 31-063 | 31-065 |
| | 33-344 | | | | 36-104 | 49-045 | 49-047 | | 31-063 | 31-063 | 31-065 |
| 50-105 | 33-344 | | 49-033 | | 36-104 | 49-045 | 49-047 | 36-022 | 31-063 | 31-063 | 31-065 |
| | 33-344 | | | | | | | | 31-063 | 31-063 | 31-065 |
| 50-105 | 33-344 | | | | 36-104 | 49-045 | 49-047 | 36-005 | 31-063 | 31-063 | 31-065 |
| 50-105 | 33-344 | | | | 36-104 | 49-045 | 49-047 | 36-005 | 31-063 | 31-063 | 31-065 |
| 50-105 | 33-344 | | | | 36-104 | 49-045 | 49-047 | 36-005 | 43-200 | 43-400-0 | |
| | 33-347 | | | | | 49-045 | 49-047 | | | 43-400-0 | |
| | 33-347 | | | | | | | | | | |
| 49-115 | 33-347 | | | 49-146 | 36-104 | 49-045 | 49-047 | 36-005 | 31-063 | 31-063 | 31-065 |
| 49-115 | 33-347 | | | 49-146 | 36-104 | 49-045 | 49-047 | 36-005 | 31-063 | 31-063 | 31-065 |
| 49-115 | 33-347 | | | 49-146 | 36-104 | 49-045 | 49-047 | 36-005 | 31-063 | 31-063 | 31-065 |
| 49-115 | 33-347 | | | 49-146 | 36-104 | 49-045 | 49-047 | | 31-063 | 31-063 | 31-065 |
| 49-115 | 33-347 | | | 49-146 | | 49-045 | 49-047 | | | | |
| 49-115 | 33-347 | | | | 36-104 | 49-045 | 49-047 | 36-005 | 31-063 | 31-063 | 31-065 |
| 49-115 | 33-347 | | | | | 49-045 | 49-047 | | 31-063 | 31-063 | 31-065 |
| 49-115 | 33-347 | | | | | 49-045 | 49-047 | | | | |
| 49-115 | 33-347 | | | | | 49-045 | 49-047 | | | | |
| 49-115 | 33-347 | | | | | 49-045 | 49-047 | | | | |
| 49-115 | 33-347 | | | | | 49-045 | 49-047 | | | | |
| 49-115 | 33-347 | | | | | 49-045 | 49-047 | | | | |
| 49-115 | 33-347 | | | | | 49-045 | 49-047 | | | | |
| 49-115 | 33-347 | | | | | 49-045 | 49-047 | | | | |
| | 33-347 | | | | | | | | | | |
| | 33-347 | | 49-210 Walbro | | | 49-045 | | | | | |
| | 33-347 | | | | | | | | | | |
| 49-115 | 33-347 | | 49-033 | 49-102 | 36-104 | 49-045 | 49-047 | 36-005 | 43-200 | 43-400-0 | |
| | 33-347 | | | | | | | | | | |
| 49-115 | 33-347 | | 49-033 | 49-102 | 36-104 | 49-045 | 49-047 | | 31-063 | 31-063 | 31-065 |
| | 33-347 | | | | | | | | | | |
| 49-115 | 33-347 | | | 49-146 | 36-104 | 49-045 | 49-047 | 36-005 | | | |
| | 33-347 | | | | | | | | | | |
| 49-115 | 33-347 | | | 49-146 | 36-104 | 49-045 | 49-047 | | 31-063 | 31-063 | 31-065 |
| | 33-347 | | | | | | | | | | |
| 49-115 | 33-347 | | | 49-146 | 36-104 | 49-045 | 49-047 | | | | |
| | 33-347 | | 49-210 Walbro | | | 49-045 | | | | | |
| | 33-347 | | 49-210 Walbro | | | 49-045 | | | | | |
| 49-115 | 33-347 | | | 49-146 | 36-104 | 49-045 | 49-047 | 36-005 | | | |
| | 33-347 | | | | | | | | | | |
| 49-115 | 33-347 | | | 49-146 | 36-104 | 49-045 | 49-047 | | 31-063 | 31-063 | 31-065 |
| 49-115 | 33-347 | | | | | 49-045 | 49-047 | | 31-063 | 31-063 | 31-065 |
| 49-115 | 33-347 | | | | 36-104 | 49-045 | 49-047 | 36-005 | | | |
| 49-115 | 33-347 | | | | 36-104 | 49-045 | 49-047 | 36-005 | 31-063 | 31-063 | 31-065 |
| | 33-347 | | | | | | | | | | |
| | 33-347 | | | | | | | | | | |
| | 33-347 | | | | | | | | | | |
| | 33-347 | | | | | | | | | | |
| | | | | | | | | | | | |
| | | | | | | | | | | | |
| | | | | | | | | | | | |
| | | | | | | | | | | | |
| | | | | | | | | | | | |
| | 33-365 | | 49-033 | | | | | | | | |
| | 33-365 | | | | | | | | | | |
| | 33-365 | | 49-033 | 49-071 | | | | | | 43-400-0 | |
| | 33-347 | | | | | | | | | | |
| | 33-347 | | | | | | | | | | |
| | 33-347 | | | | | | | | | | |
| 49-162 | 33-347 | | | | | 49-169 | 49-168 | | | | |
| 49-162 | 33-347 | | | | | 49-169 | 49-168 | | | | |
| | 33-347 | | | | | | | | | | |
| | 33-347 | | | | | | | | | | |
| | 33-347 | | | | | | | | | | |

X

# Briggs & Stratton Quick X-Reference

| Model | | Foam Air Cleaner | Cartridge | Pre-Cleaner | Air Cleaner Gasket | Carb. Mtg. Gasket | Manifold Gasket | Head Gasket #1 | Head Gasket #2 | Gasket Set | Valve Cover Gasket |
|---|---|---|---|---|---|---|---|---|---|---|---|
| 31A700 | | | 30-074 (non-washable)<br>30-122 (washable) | 30-076 | | | | | | | |
| 31B700 | | | 30-074 (non-washable)<br>30-122 (washable) | 30-076 | | | | | | | |
| 31C700 | | | 30-074 (non-washable)<br>30-122 (washable) | 30-076 | | | | | | | |
| 31D700 | | | 30-074 (non-washable)<br>30-122 (washable) | 30-076 | | | | | | | |
| 31E500 | | | 30-074 (non-washable)<br>30-122 (washable) | 30-076 | | | | | | | |
| 31E600 | | | 30-074 (non-washable)<br>30-122 (washable) | 30-076 | | | | | | | |
| 31E700 | | | 30-074 (non-washable)<br>30-122 (washable) | 30-076 | | | | | | | |
| 31E800 | | | 30-167 | 30-448 | | | | | | | |
| 31F700 | | | 30-074 (non-washable)<br>30-122 (washable) | 30-076 | | | | | | | |
| 31G700 | Intek | | 30-074 (non-washable)<br>30-122 (washable) | 30-076 | | 49-165 | | | | | 49-161 |
| 31H700 | | | 30-074 (non-washable)<br>30-122 (washable) | 30-076 | | | | | | | |
| 31L700 | Extended life | | 30-074 (non-washable)<br>30-122 (washable) | 30-076 | | 49-165 | | | | | 49-161 |
| 31M700 | | | 30-074 (non-washable)<br>30-122 (washable) | 30-076 | | | | | | | |
| 31M900 | | | 30-074 (non-washable)<br>30-122 (washable) | 30-076 | | | | | | | |
| 31N600 | | | 30-074 (non-washable)<br>30-122 (washable) | 30-076 | | | | | | | |
| 31N700 | Intek I/C | | 30-074 (non-washable)<br>30-122 (washable) | 30-076 | | 49-165 | | | | | 49-161 |
| 31P600 | | | 30-074 (non-washable)<br>30-122 (washable) | 30-076 | | | | | | | |
| 31P700 | | | 30-074 (non-washable)<br>30-122 (washable) | 30-076 | | | | | | | |
| 31P800 | | | 30-074 (non-washable)<br>30-122 (washable) | 30-076 | | | | | | | |
| 31P900 | | | 30-074 (non-washable)<br>30-122 (washable) | 30-076 | | | | | | | |
| 31Q500 | | | | | | | | | | | |
| 31Q600 | | | 30-074 (non-washable)<br>30-122 (washable) | 30-076 | | | | | | | |
| 31Q700 | Extended life | | 30-074 (non-washable)<br>30-122 (washable) | 30-076 | | 49-165 | | | | | 49-161 |
| 31R500 | | | | | | | | | | | |
| 31R700 | | | | | | | | | | | |
| 31R900 | | | | | | | | | | | |
| 31S700 | | | 30-167 | 30-448 | | | | | | | |
| 31S800 | | | 30-167 | 30-448 | | | | | | | |
| 31S900 | | | 30-167 | 30-448 | | | | | | | |
| 31X700 | | | | | | | | | | | |
| 310700 | | | 30-049 | 30-925 | | | | | | | |
| 311700 | | | 30-049 | 30-925 | | | | | | | |
| 312700 | | | 30-049 | 30-925 | | | | | | | |
| 313700 | | | 30-049 | 30-925 | | | | | | | |
| 319700 | | | 30-074 (non-washable)<br>30-122 (washable) | 30-076 | | | | | | | |
| 320400 | | | | | | 49-118 | | | | | 49-112 |
| 325400 | | | 30-044 | 30-920 | | | | | | | |
| 326400 | | | 30-044 | 30-920 | | 49-118 | | | | | 49-112 |
| 33M600 | | | 30-167 | 30-448 | | | | | | | |
| 33M700 | | | 30-167 | 30-448 | | | | | | | |
| 33M900 | | | 30-167 | 30-448 | | | | | | | |
| 33R700 | | | 30-167 | 30-448 | | | | | | | |
| 33R800 | | | 30-167 | 30-448 | | | | | | | |
| 33S700 | | | 30-167 | 30-448 | | | | | | | |
| 33S800 | | | 30-167 | 30-448 | | | | | | | |
| 331700 | | | 30-167 | 30-448 | | | | | | | |
| 331800 | | | 30-167 | 30-448 | | | | | | | |
| 331900 | | | 30-167 | 30-448 | | | | | | | |
| 350400 | | | 30-101 | 30-929 | | | | | | | |
| 350700 | Vanguard | | 30-101 round<br>30-736 rectangle | 30-929 round<br>30-450 rectangle | | | | | | | |
| 351400 | | | 30-101 | 30-929 | | | | | | | |
| 351700 | Vanguard | | 30-101 | 30-929 | | | | | | | |
| 354400 | | | 30-101 | 30-929 | | | | | | | |
| 356400 | | | 30-044 | 30-920 | | | | | | | |
| 356700 | Vanguard | | 30-101 | 30-929 | | | 50-439 | | | | 49-172 |
| 358700 | Vanguard | | 30-087 | 30-929 | | | 50-439 | | | | 49-172 |
| 359400 | | | | 30-929 | | | | | | | |
| 380400 | | | 30-087 | 30-974 | | | | | | | |
| 380700 | Vanguard | | 30-087 | 30-974 | | | | | | | 49-172 |
| 381400 | | | 30-087 | 30-974 | | | | | | | |
| 381700 | | | 30-087 | 30-974 | | | | | | | |
| 384400 | | | | 30-929 | | | 50-439 | | | | |
| 385400 | Vanguard | | 30-087 | 30-974 | | | | | | | 49-172 |

X

| Base Gasket | Igition Armature | Diaphragm | Float Valve | Carb. Overhaul | Rod | Mag Oil Seal | PTO Oil Seal | Rings-Std | Starter Pulley | Recoil Spring | Recoil Starter |
|---|---|---|---|---|---|---|---|---|---|---|---|
| | 33-347 | | | | | | | | | | |
| | 33-347 | | | | | | | | | | |
| | 33-347 | | | | | | | | | | |
| | 33-347 | | | | | | | | | | |
| | 33-347 | | | | | | | | | | |
| | 33-347 | | | | | | | | | | |
| | 33-347 | | | | | | | | | | |
| | | | | | | | | | | | |
| | 33-347 | | | | | | | | | | |
| | 33-347 | | 49-210 Walbro | | | 49-045 | | | | | |
| | 33-347 | | | | | | | | | | |
| | 33-347 | | 49-210 Walbro | | | 49-045 | | | | | |
| | 33-347 | | | | | | | | | | |
| | 33-347 | | | | | | | | | | |
| | 33-347 | | | | | | | | | | |
| | 33-347 | | 49-210 Walbro | | | 49-045 | | | | | |
| | | | | | | | | | | | |
| | | | | | | | | | | | |
| | 33-347 | | | | | | | | | | |
| | 33-347 | | | | | | | | | | |
| | 33-347 | | | | | | | | | | |
| | 33-347 | | | | | | | | | | |
| | 33-347 | | 49-210 Walbro | | | 49-045 | | | | | |
| | 33-347 | | | | | | | | | | |
| | 33-347 | | | | | | | | | | |
| | 33-347 | | | | | | | | | | |
| | | | | | | | | | | | |
| | 33-347 | | | | | | | | | | |
| | 33-347 | | | | | | | | | | |
| | 33-347 | | | | | | | | | | |
| | 33-347 | | | | | | | | | | |
| | 33-347 | | | | | | | | | | |
| | 33-347 | | | | | | | | | | |
| | 33-365 | | 49-033 | | | | | | | | |
| | 33-365 | | | | | | | | | | |
| | 33-365 | | 49-033 | 49-989 | | | | | | | 43-400-0 |
| | | | | | | | | | | | |
| | | | | | | | | | | | |
| | | | | | | | | | | | |
| | | | | | | | | | | | |
| | | | | | | | | | | | |
| | | | | | | | | | | | |
| | | | | | | | | | | | |
| | 33-347 | | | | | | | | | | |
| | 33-347 | | | | | | | | | | |
| | 33-347 | | | | | | | | | | |
| | 33-347 | | | | | | | | | | |
| | 33-347 | | | | | | | | | | |
| | | | | | | | | | | | |
| 49-162 | 33-347 | | | | | | 49-169 | 49-168 | | | |
| 49-162 | 33-347 | | | | | | 49-169 | 49-168 | | | |
| | | | | | | | | | | | |
| | 33-347 | | | | | | | | | | |
| | 33-347 | | | | | | 49-169 | 49-168 | | | |
| | 33-347 | | | | | | | | | | |
| | 33-347 | | | | | | | | | | |
| | 33-347 | | | | | | | | | | |
| | 33-347 | | | | | | 49-169 | 49-168 | | | |

X

# Briggs & Stratton Quick X-Reference

| Model | | Foam Air Cleaner | Cartridge | Pre-Cleaner | Air Cleaner Gasket | Carb. Mtg. Gasket | Manifold Gasket | Head Gasket #1 | Head Gasket #2 | Gasket Set | Valve Cover Gasket |
|---|---|---|---|---|---|---|---|---|---|---|---|
| 385700 | | | 30-087 | 30-974 | | | | | | | |
| 386400 | Vanguard | | 30-087 | 30-974 | | | | | | | 49-172 |
| 386700 | Vanguard | | 30-087 | 30-974 | | | | | | | 49-172 |
| 389400 | | | | 30-929 | | | | | | | |
| 40R500 | | | 30-851 | | | | | | | | |
| 40R600 | | | 30-851 | | | | | | | | |
| 40A700 | | | 30-104 | 30-929 | 49-081 | | 50-440 | 50-545 | 50-546 | 50-436 | 49-112 |
| 40F700 | | | 30-032 (non-washable)<br>30-136 (washable) | 30-914 | | | | | | | |
| 40G700 | | | 30-032 (non-washable)<br>30-136 (washable) | 30-914 | | | | | | | |
| 40H700 | Extended life | | 30-032 (non-washable)<br>30-136 (washable) | 30-914 | | | | | | | |
| 40N700 | | | 30-851 | | | | | | | | |
| 40R700 | | | 30-851 | | | | | | | | |
| 40S700 | | | 30-145 | | | | | | | | |
| 40N800 | | | 30-851 | | | | | | | | |
| 40R800 | | | 30-851 | | | | | | | | |
| 40S800 | | | 30-145 | | | | | | | | |
| 400400 | | | 30-101 | 30-929 | 49-081 | | 50-440 | 50-545 | 50-546 | 50-436 | 49-112 |
| 400700 | | | 30-104 | 30-929 | 49-081 | | 50-440 | 50-545 | 50-546 | 50-436 | 49-112 |
| 401500 | | | 30-032 (non-washable)<br>30-136 (washable) | 30-914 | | | | | | | |
| 401400 | | | 30-101 | 30-929 | 49-081 | | 50-440 | 50-545 | 50-546 | 50-436 | 49-112 |
| 401700 | | | 30-104 | 30-929 | 49-081 | | 50-440 | 50-545 | 50-546 | 50-436 | 49-112 |
| 402400 | | | | 30-929 | 49-081 | | 50-440 | 50-545 | 50-546 | 50-436 | 49-112 |
| 402500 | | | 30-032 (non-washable)<br>30-136 (washable) | 30-914 | | | | | | | |
| 402700 | | | 30-104 | 30-929 | 49-081 | | 50-440 | 50-545 | 50-546 | 50-436 | 49-112 |
| 403500 | | | | | | | | | | | |
| 403600 | | | 30-032 (non-washable)<br>30-136 (washable) | 30-917 | | | | | | | |
| 404400 | | | 30-101 | 30-929 | 49-081 | | 50-440 | 50-545 | 50-546 | 50-436 | 49-112 |
| 404500 | | | 30-032 (non-washable)<br>30-136 (washable) | 30-914 | | | | | | | |
| 404700 | | | 30-104 | 30-929 | 49-081 | | 50-440 | 50-545 | 50-546 | 50-436 | 49-112 |
| 405500 | | | 30-032 (non-washable)<br>30-136 (washable) | 30-914 | | | | | | | |
| 405700 | | | 30-032 (non-washable)<br>30-136 (washable) | 30-914 | | | | | | | |
| 406500 | | | 30-032 (non-washable)<br>30-136 (washable) | 30-914 | | | | | | | |
| 406600 | | | 30-032 (non-washable)<br>30-136 (washable) | 30-914 | | | | | | | |
| 406700 | | | 30-032 (non-washable)<br>30-136 (washable) | 30-914 | | | | | | | |
| 407500 | Intek | | 30-032 (non-washable)<br>30-136 (washable) | 30-914 | | | | | | | |
| 407600 | | | 30-032 (non-washable)<br>30-136 (washable) | 30-914 | | | | | | | |
| 407700 | | | 30-032 (non-washable)<br>30-136 (washable) | 30-914 | | | | | | | |
| 409700 | | | 30-182 | | | | | | | | |
| 42A700 | | | 30-104 | 30-929 | 49-081 | | 50-440 | 50-545 | 50-546 | 40-436 | 49-112 |
| 42B700 | | | 30-104 | 30-929 | 49-081 | | 50-440 | 50-545 | 50-546 | 50-436 | 49-112 |
| 42C700 | | | 30-104 | 30-929 | 49-081 | | 50-440 | 50-545 | 50-546 | 50-436 | 49-112 |
| 42D700 | | | 30-104 | 30-929 | 49-081 | | 50-440 | 50-545 | 50-546 | 50-436 | 49-112 |
| 42E700 | | | 30-104 | 30-929 | 49-081 | | 50-440 | 50-545 | 50-546 | 50-436 | 49-112 |
| 421400 | | | 30-101 | 30-929 | 49-081 | | 50-440 | 50-545 | 50-546 | 50-436 | 49-112 |
| 421700 | | | 30-104 | 30-929 | 49-081 | | 50-440 | 50-545 | 50-546 | 50-436 | 49-112 |
| 422400 | | | 30-101 | 30-929 | 49-081 | | 50-440 | 50-545 | 50-546 | 50-436 | 49-112 |
| 422700 | | | 30-104 | 30-929 | 49-081 | | 50-440 | 50-545 | 50-546 | 50-436 | 49-112 |
| 433400 | | | 30-075 | | | | | | | | |
| 437400 | | | 30-075 | | | | | | | | |
| 44R500 | | | 30-851 | | | | | | | | |
| 44S500 | | | 30-145 | 30-975 | | | | | | | |
| 44N600 | | | 30-851 | | | | | | | | |
| 44R600 | | | 30-851 | | | | | | | | |
| 44S600 | | | | | | | | | | | |
| 44T600 | | | 30-182 | | | | | | | | |
| 44H700 | | | 30-145 | 30-975 | | | | | | | |
| 44K700 | Extended life | | 30-145 | 30-975 | | | | | | | |
| 44L700 | | | 30-145 | 30-975 | | | | | | | |
| 44M700 | | | 30-145 | 30-975 | | | | | | | |
| 44N700 | | | 30-145 | 30-975 | | | | | | | |
| 44P700 | Extended life | | 30-145 | 30-975 | | | | | | | |
| 44Q700 | | | 30-145 | 30-975 | | | | | | | |
| 44R700 | | | 30-851 | | | | | | | | |
| 44S700 | | | 30-145 | 30-975 | | | | | | | |
| 44T700 | | | 30-182 | | | | | | | | |
| 44N800 | | | 30-851 | | | | | | | | |
| 44R800 | | | 30-851 | | | | | | | | |
| 44S800 | | | | | | | | | | | |
| 44T800 | | | 30-182 | | | | | | | | |
| 44M900 | | | 30-182 | | | | | | | | |

| Base Gasket | Igition Armature | Diaphragm | Float Valve | Carb. Overhaul | Rod | Mag Oil Seal | PTO Oil Seal | Rings-Std | Starter Pulley | Recoil Spring | Recoil Starter |
|---|---|---|---|---|---|---|---|---|---|---|---|
| | 33-347 | | | | | 49-169 | 49-168 | | | | |
| | 33-347 | | | | | 49-169 | 49-168 | | | | |
| | 33-347 | | | | | | | | | | |
| | 33-352-0 | | | | | | | | | | |
| | 33-352-0 | | | | | | | | | | |
| 50-444 | 33-345 | | | 49-149 | | 49-045 | 49-047 | | | | |
| | 33-345 | | | | | 49-045 | | | | | |
| | 33-345 | | | | | 49-045 | | | | | |
| | 33-345 | | | | | | | | | | |
| | 33-352-0 | | | | | | | | | | |
| | 33-352-0 | | | | | | | | | | |
| | 33-352-0 | | | | | | | | | | |
| | 33-352-0 | | | | | | | | | | |
| | 33-352-0 | | | | | | | | | | |
| | 33-352-0 | | | | | | | | | | |
| 50-444 | 33-345 | | 49-033 | 49-149 | | 49-045 | 49-047 | | | | |
| 50-444 | 33-345 | | 49-033 | 49-149 | | 49-045 | 49-047 | | | | |
| | 33-352-0 | | | | | | | | | | |
| 50-444 | 33-345 | | 49-033 | 49-149 | | 49-045 | 49-047 | | | | |
| 50-444 | 33-345 | | 49-033 | 49-149 | | 49-045 | 49-047 | | | | |
| 50-444 | 33-345 | | 49-033 | 49-149 | | 49-045 | 49-047 | | | | |
| | 33-345 | | | | | 49-045 | | | | | |
| 50-444 | 33-345 | | 49-033 | 49-149 | | 49-045 | 49-047 | | | | |
| | 33-352-0 | | | | | | | | | | |
| | 33-352-0 | | | | | | | | | | |
| 50-444 | 33-345 | | 49-033 | 49-149 | | 49-045 | 49-047 | | | | |
| | 33-352-0 | | | | | 49-045 | | | | | |
| 50-444 | 33-345 | | 49-033 | 49-149 | | 49-045 | 49-047 | | | | |
| | 33-352-0 | | | | | | | | | | |
| | 33-352-0 | | | | | 49-045 | | | | | |
| | 33-352-0 | | | | | | | | | | |
| | 33-352-0 | | | | | | | | | | |
| | 33-352-0 | | | | | 49-045 | | | | | |
| | 33-352-0 | | | | | 49-045 | | | | | |
| | 33-352-0 | | | | | 49-045 | | | | | |
| | 33-352-0 | | | | | 49-045 | | | | | |
| | 33-352-0 | | | | | | | | | | |
| 50-444 | 33-345 | | | 49-149 | | 49-045 | 49-047 | | | | |
| 50-444 | 33-345 | | | 49-149 | | 49-045 | 49-047 | | | | |
| 50-444 | 33-345 | | | | | 49-045 | 49-047 | | | | |
| 50-444 | 33-345 | | | 49-149 | | 49-045 | 49-047 | | | | |
| 50-444 | 33-345 | | | 49-149 | | 49-045 | 49-047 | | | | |
| 50-444 | 33-345 | | 49-033 | 49-149 | | 49-045 | 49-047 | | | | |
| 50-444 | 33-345 | | | 49-149 | | 49-045 | 49-047 | | | | |
| 50-444 | 33-345 | | 49-033 | 49-149 | | 49-045 | 49-047 | | | 43-400-0 | |
| 50-444 | 33-345 | | 49-033 | 49-149 | | 49-045 | 49-047 | | | | |
| | | | | | | | | | | | |
| | 33-352-0 | | | | | | | | | | |
| | 33-352-0 | | | | | | | | | | |
| | 33-352-0 | | | | | | | | | | |
| | 33-352-0 | | | | | | | | | | |
| | 33-352-0 | | | | | | | | | | |
| | 33-352-0 | | | | | | | | | | |
| | 33-352-0 | | | | | | | | | | |
| | 33-352-0 | | | | | 49-045 | | | | | |
| | 33-352-0 | | | | | | | | | | |
| | 33-352-0 | | | | | | | | | | |
| | 33-352-0 | | | | | | | | | | |
| | 33-352-0 | | | | | 49-045 | | | | | |
| | 33-352-0 | | | | | | | | | | |
| | 33-352-0 | | | | | | | | | | |
| | 33-352-0 | | | | | | | | | | |
| | 33-352-0 | | | | | | | | | | |
| | 33-352-0 | | | | | | | | | | |
| | 33-352-0 | | | | | | | | | | |
| | 33-352-0 | | | | | | | | | | |
| | 33-352-0 | | | | | | | | | | |
| | 33-352-0 | | | | | | | | | | |
| | 33-352-0 | | | | | | | | | | |

X

# Briggs & Stratton Quick X-Reference

| Model | | Foam Air Cleaner | Cartridge | Pre-Cleaner | Air Cleaner Gasket | Carb. Mtg. Gasket | Manifold Gasket | Head Gasket #1 | Head Gasket #2 | Gasket Set | Valve Cover Gasket |
|---|---|---|---|---|---|---|---|---|---|---|---|
| 44P900 | | | 30-182 | | | | | | | | |
| 44Q900 | | | 30-182 | | | | | | | | |
| 44S900 | | | 30-145 | 30-975 | | | | | | | |
| 44T900 | | | 30-182 | | | | | | | | |
| 441500 | | | 30-032 (non-washable)<br>30-136 (washable) | 30-914 | | | | | | | |
| 441600 | | | 30-032 (non-washable)<br>30-136 (washable) | 30-914 | | | | | | | |
| 441700 | Intek | | 30-032 (non-washable)<br>30-136 (washable) | 30-914 | | | | | | | |
| 442500 | | | 30-032 (non-washable)<br>30-136 (washable) | 30-914 | | | | | | | |
| 445500 | | | 30-032 (non-washable)<br>30-136 (wa shable) | 30-914 | | | | | | | |
| 445600 | | | 30-032 (non-washable)<br>30-136 (washable) | 30-914 | | | | | | | |
| 445700 | Intek | | 30-032 (non-washable)<br>30-136 (washable, 05082200 or less)<br>30-139 (0508210 or greater) | 30-914 | | | | | | | |
| 445800 | | | 30-032 (non-washable)<br>30-136 (washable, 05082200 or less)<br>30-139 (0508210 or greater) | 30-914 | | | | | | | |
| 445900 | | | 30-032 (non-washable)<br>30-136 (washable, 05082200 or less)<br>30-139 (0508210 or greater) | 30-914 | | | | | | | |
| 446600 | | | 30-032 (non-washable)<br>30-136 (washable, 05082200 or less)<br>30-139 (0508210 or greater) | 30-914 | | | | | | | |
| 446700 | | | 30-032 (non-washable)<br>30-136 (washable) | 30-914 | | | | | | | |
| 446800 | | | 30-032 (non-washable)<br>30-136 (washable, 05082200 or less)<br>30-139 (0508210 or greater) | 30-914 | | | | | | | |
| 446900 | | | 30-032 (non-washable)<br>30-136 (washable) | 30-914 | | | | | | | |
| 460700 | Extended life | | 30-104 | 30-929 | 49-081 | | 50-440 | 50-545 | 50-546 | 50-436 | 49-112 |
| 461700 | | | 30-104 | 30-929 | 49-081 | | 50-440 | 50-545 | 50-546 | 50-436 | 49-112 |
| 462700 | | | 30-104 | 30-929 | 49-081 | | 50-440 | 50-545 | 50-546 | 50-436 | 49-112 |
| 463700 | | | 30-104 | 30-929 | 49-081 | | 50-400 | 50-545 | 50-546 | 50-436 | 49-112 |
| 473100 | | | 30-075 | | | | | | | | |
| 474100 | | | 30-075 | | | | | | | | |
| 49G500 | | | | | | | | | | | |
| 49L900 | | | 30-182 | | | | | | | | |
| 49M700 | | | 30-145 | 30-975 | | | | | | | |
| 49M800 | | | 30-145 | 30-975 | | | | | | | |
| 49M900 | | | 30-182 | | | | | | | | |
| 49S700 | | | 30-145 | 30-975 | | | | | | | |
| 49S800 | | | 30-145 | 30-975 | | | | | | | |
| 49T700 | | | 30-182 | | | | | | | | |
| 49T800 | | | 30-182 | | | | | | | | |
| 49V600 | | | | | | | | | | | |
| 540400 | | | 30-087 | 30-974 | | | | | | | |
| 541400 | | | 30-087 | 30-974 | | | | | | | |
| 542400 | | | 30-087 | 30-974 | | | | | | | |
| 543400 | Vanguard | | 30-087 | 30-974 | | | | | | | |
| 543700 | | | 30-087 | 30-974 | | | | | | | |
| 58A400 | | | 30-075 | | | | | | | | |
| 582400 | | | 30-075 | | | | | | | | |
| 584400 | | | 30-075 | | | | | | | | |
| 588400 | | | 30-075 | | | | | | | | |
| 589400 | | | | | | | | | | | |
| 611400 | | | 30-087 | 30-974 | | | | | | | |
| 613400 | Vanguard | | 30-087 | 30-974 | | | | | | | |
| 613700 | | | 30-087 | 30-974 | | | | | | | |

X

| Base Gasket | Igition Armature | Diaphragm | Float Valve | Carb. Overhaul | Rod | Mag Oil Seal | PTO Oil Seal | Rings-Std | Starter Pulley | Recoil Spring | Recoil Starter |
|---|---|---|---|---|---|---|---|---|---|---|---|
| | 33-352-0 | | | | | | | | | | |
| | 33-352-0 | | | | | | | | | | |
| | 33-352-0 | | | | | | | | | | |
| | 33-352-0 | | | | | | | | | | |
| | 33-352-0 | | | | | | | | | | |
| | 33-352-0 | | | | | | | | | | |
| | 33-352-0 | | | | | 49-045 | | | | | |
| | 33-352-0 | | | | | | | | | | |
| | 33-352-0 | | | | | | | | | | |
| | 33-352-0 | | | | | | | | | | |
| | 33-352-0 | | | | | 49-045 | | | | | |
| | 33-352-0 | | | | | | | | | | |
| | 33-352-0 | | | | | | | | | | |
| | 33-352-0 | | | | | | | | | | |
| | 33-352-0 | | | | | | | | | | |
| | 33-352-0 | | | | | | | | | | |
| 50-444 | 33-345 | | | 49-149 | | 49-045 | 49-047 | | | | |
| 50-444 | 33-345 | | | 49-149 | | 49-045 | 49-047 | | | | |
| 50-444 | 33-345 | | | 49-149 | | 49-045 | 49-047 | | | | |
| 50-444 | 33-345 | | | 49-149 | | 49-045 | 49-047 | | | | |
| | | | | | | | | | | | |
| | 33-352-0 | | | | | | | | | | |
| | 33-352-0 | | | | | | | | | | |
| | 33-352-0 | | | | | | | | | | |
| | 33-352-0 | | | | | | | | | | |
| | 33-352-0 | | | | | | | | | | |
| | 33-352-0 | | | | | | | | | | |
| | 33-352-0 | | | | | | | | | | |
| | 33-352-0 | | | | | | | | | | |
| | 33-352-0 | | | | | | | | | | |
| | 33-352-0 | | | | | | | | | | |
| | | | | | | | | | | | |
| | 33-352-0<br>04090100 & less | | | | | | | | | | |

# 2019 OEM X-Reference

| OEM No. | OREGON | Page |
|---|---|---|
| **ACE HARDWARE** | | |
| 754-0145 | 75-145 | LG 300 |
| 754-0151 | 75-004 | LG 301 |
| 754-0178 | 75-179 | LG 310 |
| 754-0201 | 75-441 | LG 334 |
| 754-0230 | 75-008 | LG 301 |
| 754-0234 | 75-441 | LG 334 |
| 754-0240 | 75-009 | LG 301 |
| 754-0241 | 75-012 | LG 301 |
| 754-0266 | 75-016 | LG 301 |
| 754-0293 | 75-018 | LG 301 |
| 754-0349 | 75-021 | LG 274 |
| 754-0350 | 75-035 | LG 302 |
| 754-0935 | 75-092 | LG 304 |
| 954-0145 | 75-145 | LG 300 |
| 954-0145A | 75-145 | LG 300 |
| 954-0151 | 75-004 | LG 301 |
| 954-015A | 75-145 | LG 300 |
| 954-0178 | 75-179 | LG 310 |
| 954-0201 | 75-441 | LG 334 |
| 954-0230 | 75-008 | LG 301 |
| 954-0234 | 75-441 | LG 334 |
| 954-0240 | 75-009 | LG 301 |
| 954-0241 | 75-012 | LG 301 |
| 954-0241A | 75-012 | LG 301 |
| 954-0266 | 75-016 | LG 301 |
| 954-0266A | 75-016 | LG 301 |
| 954-0293 | 75-018 | LG 301 |
| 954-0350 | 75-035 | LG 302 |
| 954-0935 | 75-092 | LG 304 |
| GW-7540350 | 75-035 | LG 302 |
| **AFFILIATED EXPORT** | | |
| 754-0935 | 75-092 | LG 304 |
| 954-0935 | 75-092 | LG 304 |
| **AFFILIATED LANDMASTER** | | |
| 754-0935 | 75-092 | LG 304 |
| 954-0935 | 75-092 | LG 304 |
| **AGWAY** | | |
| 37X11 | 75-111 | LG 306 |
| 37X22 | 75-022 | LG 307 |
| 37X40 | 75-040 | LG 306 |
| 754-0145 | 75-145 | LG 300 |
| 754-0151 | 75-004 | LG 301 |
| 754-0178 | 75-179 | LG 310 |
| 754-0201 | 75-441 | LG 334 |
| 754-0230 | 75-008 | LG 301 |
| 754-0234 | 75-441 | LG 334 |
| 754-0240 | 75-009 | LG 301 |
| 754-0241 | 75-012 | LG 301 |
| 754-0266 | 75-016 | LG 301 |
| 754-0935 | 75-092 | LG 304 |
| 954-0145 | 75-145 | LG 300 |
| 954-0145A | 75-145 | LG 300 |
| 954-0151 | 75-004 | LG 301 |
| 954-015A | 75-145 | LG 300 |
| 954-0178 | 75-179 | LG 310 |
| 954-0201 | 75-441 | LG 334 |
| 954-0230 | 75-008 | LG 301 |
| 954-0234 | 75-441 | LG 334 |
| 954-0240 | 75-009 | LG 301 |
| 954-0241 | 75-012 | LG 301 |
| 954-0241A | 75-012 | LG 301 |
| 954-0266 | 75-016 | LG 301 |
| 954-0266A | 75-016 | LG 301 |
| 954-0935 | 75-092 | LG 304 |
| **AIMCEE WHOLESALE** | | |
| 754-0935 | 75-092 | LG 304 |
| 954-0935 | 75-092 | LG 304 |
| **AIRCAP** | | |
| 754-0145 | 75-145 | LG 300 |
| 754-0151 | 75-004 | LG 301 |
| 754-0240 | 75-009 | LG 301 |
| 754-0241 | 75-012 | LG 301 |
| 954-0145 | 75-145 | LG 300 |
| 954-0145A | 75-145 | LG 300 |
| 954-0151 | 75-004 | LG 301 |
| 954-015A | 75-145 | LG 300 |
| 954-0240 | 75-009 | LG 301 |
| 954-0241 | 75-012 | LG 301 |
| 954-0241A | 75-012 | LG 301 |
| **ALDENS** | | |
| 754-0151 | 75-004 | LG 301 |
| 754-0158 | 75-012 | LG 301 |
| 754-0935 | 75-092 | LG 304 |
| 954-0151 | 75-004 | LG 301 |
| 954-0935 | 75-092 | LG 304 |
| **ALLIED HARDWARE** | | |
| 754-0145 | 75-145 | LG 300 |
| 754-0151 | 75-004 | LG 301 |
| 754-0178 | 75-179 | LG 310 |
| 754-0234 | 75-441 | LG 334 |
| 754-0935 | 75-092 | LG 304 |
| 954-0145 | 75-145 | LG 300 |
| 954-0145A | 75-145 | LG 300 |
| 954-0151 | 75-004 | LG 301 |
| 954-015A | 75-145 | LG 300 |
| 954-0178 | 75-179 | LG 310 |
| 954-0935 | 75-092 | LG 304 |
| **ALLIED STORE CORP.** | | |
| 754-0145 | 75-145 | LG 300 |
| 954-0145 | 75-145 | LG 300 |
| 954-0145A | 75-145 | LG 300 |
| 954-015A | 75-145 | LG 300 |
| **ALLIS CHALMERS** | | |
| 101096 | 34-044 | LG 821 |
| 1652231 | 45-259 | LG 224 |
| 1675342 | 75-498 | LG 335 |
| 1737228A | 599-132* | LG 522 |
| 1737228A | 99-132 | LG 539 |
| 1737228BZYP | 599-132* | LG 522 |
| 1737228BZYP | 99-132 | LG 539 |
| 1737816BM | 391-605* | LG 544 |
| 1737816BM | 91-605 | LG 544 |
| 1737816BMYP | 391-605* | LG 544 |
| 1737816BMYP | 91-605 | LG 544 |
| 2026082 | 34-009 | LG 821 |
| 2026320 | 34-044 | LG 821 |
| 2026357 | 78-114 | LG 829 |
| 2028960 | 34-009 | LG 821 |
| 2029824 | 34-002 | LG 821 |
| 2087950 | 34-017 | LG 821 |
| 536986 | 45-295 | LG 232 |
| **ALLISON-ERWIN** | | |
| 754-0151 | 75-004 | LG 301 |
| 754-0178 | 75-179 | LG 310 |
| 954-0151 | 75-004 | LG 301 |
| 954-0178 | 75-179 | LG 310 |
| **ALPINA** | | |
| 3630210 | 49-021 | LG 629 |
| 66844 | 49-816 | LG 612 |
| 8723450 | 49-812 | LG 612 |
| **AMERICAN HARDWARE** | | |
| 37X38 | 75-038 | LG 307 |
| 754-0145 | 75-145 | LG 300 |
| 754-0178 | 75-179 | LG 310 |
| 754-0194 | 75-090 | LG 301 |
| 754-0201 | 75-441 | LG 334 |
| 754-0230 | 75-008 | LG 301 |
| 754-0230954-0226 | 75-008 | LG 301 |
| 754-0234 | 75-441 | LG 334 |
| 754-0240 | 75-009 | LG 301 |
| 754-0240954-0230 | 75-009 | LG 301 |
| 754-0241 | 75-012 | LG 301 |
| 754-0241954-0240 | 75-012 | LG 301 |
| 754-0280 | 75-002 | LG 301 |
| 754-0280A | 75-002 | LG 301 |
| 754-0281 | 75-281 | LG 301 |
| 754-0293 | 75-018 | LG 301 |
| 754-0935 | 75-092 | LG 304 |
| 954-0145 | 75-145 | LG 300 |
| 954-0145A | 75-145 | LG 300 |
| 954-015A | 75-145 | LG 300 |
| 954-0178 | 75-179 | LG 310 |
| 954-0194 | 75-090 | LG 301 |
| 954-0201 | 75-441 | LG 334 |
| 954-0234 | 75-441 | LG 334 |
| 954-0241 | 75-012 | LG 301 |
| 954-0241A | 75-012 | LG 301 |
| 954-0280 | 75-002 | LG 301 |
| 954-0280A | 75-002 | LG 301 |
| 954-0281 | 75-281 | LG 301 |
| 954-0293 | 75-018 | LG 301 |
| 954-0935 | 75-092 | LG 304 |
| **AMF** | | |
| 13469 | 34-013 | LG 824 |
| 13469 | 34-017 | LG 821 |
| 20304 | 02-178 | LG 676 |
| 2125 | 02-531 | |
| 21275 | 45-104 | LG 939 |
| 25812 | 75-120 | LG 300 |
| 27332 | 34-005 | LG 821 |
| 27788 | 34-037 | LG 821 |
| 300142 | 75-038 | LG 307 |
| 300295 | 33-386 | LG 942 |
| 300575 | 15-649 | LG 309 |
| 300680 | 75-136 | LG 309 |
| 300687 | 33-396 | LG 944 |
| 300841 | 34-820 | LG 833 |
| 300842 | 75-137 | LG 309 |
| 300920 | 34-023 | LG 822 |
| 301935 | 75-214 | LG 309 |
| 302031 | 33-032 | LG 742 |
| 3021 | 02-535 | |
| 302289 | 15-650 | LG 259 |
| 302418 | 73-022 | LG 847 |
| 302611 | 72-100 | |
| 303241 | 15-651 | LG 259 |
| 303534 | 82-493 | LG 869 |
| 305148 | 15-652 | LG 259 |
| 305530 | 06-004 | LG 805 |
| 307534 | 82-493 | LG 869 |
| 308701 | 15-653 | LG 310 |
| 310240 | 82-514 | LG 869 |
| 310326 | 34-820 | LG 833 |
| 310675 | 82-020 | LG 903 |
| 313823 | 82-493 | LG 869 |
| 313907 | 82-514 | LG 869 |
| 314108 | 75-138 | LG 310 |
| 315542 | 31-907 | LG 929 |
| 33125 | 15-654 | LG 309 |
| 33200 | 80-014 | LG 727 |
| 332489 | 04-723 | |
| 33486 | 02-535 | |
| 35374 | 34-034 | LG 821 |
| 35384 | 45-295 | LG 232 |
| 36576 | 72-301 | LG 1037 |
| 39456 | 75-145 | LG 300 |
| 39493 | 82-493 | LG 869 |
| 39498 | 34-011 | LG 821 |
| 39605 | 72-301 | LG 1037 |
| 39628 | 80-036 | LG 727 |
| 39633 | 34-810 | LG 725 |
| 39707 | 70-307 | LG 960 |
| 39828 | 70-334 | LG 959 |
| 39831 | 72-106 | LG 1029 |
| 39831 | 72-304 | LG 1038 |
| 39979 | 45-079 | LG 249 |
| 40195 | 45-098 | LG 243 |
| 40223 | 34-009 | LG 821 |
| 40501 | 34-022 | LG 822 |
| 41585 | 72-301 | LG 1037 |
| 42690 | 07-392 | LG 767 |
| 42879 | 07-400 | LG 767 |
| 43066 | 75-168 | LG 310 |
| 44257 | 34-019 | LG 821 |
| 44280 | 34-038 | LG 821 |
| 44745 | 33-386 | LG 942 |
| 45074 | 34-030 | LG 821 |
| 45074 | 34-033 | LG 821 |
| 45186 | 15-657 | LG 259 |
| 45651 | 34-033 | LG 821 |
| 45927 | 02-190 | LG 676 |
| 46476 | 34-016 | LG 824 |
| 46993 | 34-002 | LG 821 |
| 47781 | 34-031 | LG 821 |
| 47782 | 34-001 | LG 821 |
| 48044 | 75-179 | LG 310 |
| 49580 | 75-038 | LG 307 |
| 49878 | 15-659 | LG 309 |
| 50334 | 82-514 | LG 869 |
| 50335 | 82-514 | LG 869 |
| 50632 | 82-493 | LG 869 |
| 51134 | 34-019 | LG 821 |
| 51438 | 82-514 | LG 869 |
| 51448 | 34-012 | LG 821 |
| 51450 | 82-493 | LG 869 |
| 52204 | 72-307 | LG 1038 |
| 52323 | 33-330 | LG 729 |
| 52584 | 72-304 | LG 1038 |
| 52694 | 34-013 | LG 824 |
| 53243 | 34-031 | LG 821 |
| 53244 | 34-036 | LG 821 |
| 53415 | 514366 | LG 700 |
| 53415 | 60-400 | LG 700 |
| 53716 | 33-330 | LG 729 |
| 54446 | 72-108 | LG 1031 |
| 54765 | 35-021 | LG 810 |
| 54766 | 35-021 | LG 810 |
| 54837 | 73-025 | LG 855 |
| 56283 | 82-514 | LG 869 |
| 56424 | 82-493 | LG 869 |
| 57214 | 75-142 | LG 310 |
| 57353 | 514366 | LG 700 |
| 57353 | 60-400 | LG 700 |
| 57556 | 15-660 | LG 309 |
| 57736 | 34-019 | LG 821 |
| 58170 | 75-143 | LG 310 |
| 64761 | 34-016 | LG 824 |
| 782966 | 33-330 | LG 729 |
| **ANN & HOPE** | | |
| 754-0201 | 75-441 | LG 334 |
| 754-0234 | 75-441 | LG 334 |
| 954-0201 | 75-441 | LG 334 |
| 954-0234 | 75-441 | LG 334 |
| **ARIENS** | | |
| 00173800 | 92-040 | LG 369 |
| 00173800 | 96-040* | LG 369 |
| 00191700 | 33-130 | LG 733 |
| 00272800 | 96-040* | LG 369 |
| 00272900 | 94-615* | LG 370 |
| 0027300 | 396-809* | LG 370 |
| 0027300 | 596-816* | LG 451 |
| 00273000 | 396-716* | LG 451 |
| 00273000 | 596-310* | LG 447 |
| 00273000 | 92-153 | LG 370 |

X



* OREGON® Gator™ replacement blade

## ARIENS

| OEM No. | OREGON | Page |
|---|---|---|
| 00273000 | 96-310* | LG 444 |
| 00273000 | 99-127 | LG 375 |
| 00273100 | 396-806* | LG 453 |
| 00273100 | 596-817* | LG 371 |
| 00300300 | 76-067-0 | LG 726 |
| 00450200 | 396-809* | LG 370 |
| 00450200 | 596-816* | LG 451 |
| 00450200 | 92-153 | LG 370 |
| 00450300 | 396-806* | LG 453 |
| 00450300 | 596-817* | LG 371 |
| 00450300 | 92-151 | LG 453 |
| 00522100 | 33-002 | LG 946 |
| 0055430 | 33-117 | LG 733 |
| 00574100 | 33-117 | LG 733 |
| 00574200 | 33-121 | LG 734 |
| 00873700 | 07-122 | LG 775 |
| 01016500 | 73-100 | LG 850 |
| 01019500 | 80-740 | LG 852 |
| 01019800 | 04-723 | |
| 01027400 | 45-035 | LG 226 |
| 01027500 | 45-000 | LG 237 |
| 01027800 | 33-375 | LG 942 |
| 01027900 | 76-067-0 | LG 726 |
| 01028000 | 76-070-0 | LG 726 |
| 01028100 | 04-721 | |
| 01028200 | 33-350 | LG 949 |
| 01028300 | 30-920 | LG 186 |
| 01028400 | 30-044 | LG 179 |
| 01028500 | 30-825 | LG 179 |
| 01028600 | 73-028 | LG 850 |
| 01028700 | 73-100 | LG 850 |
| 01028800 | 45-104 | LG 939 |
| 01028900 | 33-330 | LG 729 |
| 01029000 | 33-330 | LG 729 |
| 01029200 | 33-113 | LG 740 |
| 01029300 | 33-027 | LG 947 |
| 01029400 | 45-114 | LG 938 |
| 01029500 | 45-117 | LG 938 |
| 01029600 | 33-393 | LG 943 |
| 01029700 | 83-300 | LG 819 |
| 01029900 | 83-300 | LG 819 |
| 01030100 | 76-070-0 | LG 726 |
| 01030300 | 33-393 | LG 943 |
| 01030400 | 45-114 | LG 938 |
| 01030500 | 33-334 | LG 730 |
| 01030600 | 33-336 | LG 730 |
| 01030700 | 33-111 | LG 735 |
| 01030800 | 33-410 | LG 947 |
| 01030900 | 33-112 | LG 735 |
| 01031000 | 34-019 | LG 821 |
| 01031200 | 45-206 | LG 231 |
| 01031300 | 45-205 | LG 228 |
| 01031400 | 45-035 | LG 226 |
| 01031500 | 45-002 | LG 237 |
| 01031600 | 45-257 | LG 245 |
| 01032000 | 45-295 | LG 232 |
| 01032100 | 45-000 | LG 237 |
| 01032200 | 45-208 | LG 245 |
| 01032400 | 45-295 | LG 232 |
| 01032600 | 45-259 | LG 224 |
| 01032700 | 45-000 | LG 237 |
| 01032800 | 45-208 | LG 245 |
| 01033000 | 45-260 | LG 224 |
| 01033100 | 45-000 | LG 237 |
| 01033200 | 45-010 | LG 238 |
| 01033400 | 45-208 | LG 245 |
| 01033500 | 45-260 | LG 224 |
| 01033600 | 45-257 | LG 245 |
| 01033900 | 45-295 | LG 232 |
| 01034200 | 45-295 | LG 232 |
| 01034300 | 45-003 | LG 244 |
| 01034400 | 45-013 | LG 853 |
| 01034500 | 45-007 | LG 853 |
| 01034600 | 45-006 | LG 249 |
| 01034700 | 45-007 | LG 853 |
| 01034800 | 45-098 | LG 243 |
| 01034900 | 45-009 | LG 853 |
| 01035000 | 45-008 | LG 853 |
| 01035100 | 45-009 | LG 853 |
| 01035200 | 45-007 | LG 853 |
| 01035300 | 45-009 | LG 853 |
| 01035400 | 45-008 | LG 853 |
| 01035500 | 33-117 | LG 733 |
| 01035600 | 33-117 | LG 733 |
| 01036500 | 80-742 | LG 852 |
| 01036600 | 04-723 | |
| 01036700 | 02-535 | |
| 01036800 | 02-531 | |
| 01036900 | 04-721 | |
| 01037000 | 72-737 | LG 1045 |
| 01037100 | 72-737 | LG 1045 |
| 01037200 | 75-098 | LG 251 |
| 01037300 | 75-080 | LG 862 |
| 01037400 | 75-096 | LG 265 |
| 01037600 | 75-096 | LG 265 |
| 01037700 | 75-096 | LG 265 |
| 01037800 | 75-067 | LG 862 |
| 01037900 | 75-096 | LG 265 |
| 01038000 | 75-117 | LG 265 |
| 01038100 | 75-096 | LG 265 |
| 01038300 | 75-086 | LG 265 |
| 01038400 | 75-084 | LG 265 |
| 01038500 | 75-087 | LG 265 |
| 01038600 | 75-086 | LG 265 |
| 01038700 | 75-087 | LG 265 |
| 01038800 | 34-012 | LG 821 |
| 01038900 | 34-007 | LG 826 |
| 01039000 | 34-024 | LG 822 |
| 01039100 | 34-030 | LG 821 |
| 01039200 | 34-037 | LG 821 |
| 01039300 | 34-012 | LG 821 |
| 01039400 | 34-029 | LG 821 |
| 01039500 | 34-019 | LG 821 |
| 01039600 | 34-002 | LG 821 |
| 01039700 | 34-001 | LG 821 |
| 01039800 | 34-029 | LG 821 |
| 01040000 | 07-392 | LG 767 |
| 01040100 | 07-392 | LG 767 |
| 01040200 | 33-028 | LG 947 |
| 01120300 | 91-005 | LG 458 |
| 01120300 | 96-041* | LG 372 |
| 01128500 | 91-005 | LG 458 |
| 01128500 | 96-041* | LG 372 |
| 01137000 | 91-005 | LG 458 |
| 01137000 | 96-041* | LG 372 |
| 01137051 | 91-005 | LG 458 |
| 01137051 | 96-041* | LG 372 |
| 01137059 | 91-005 | LG 458 |
| 01137059 | 96-041* | LG 372 |
| 01182400 | 91-005 | LG 458 |
| 01182400 | 96-041* | LG 372 |
| 01209600 | 75-223 | LG 269 |
| 01545600 | 33-002 | LG 946 |
| 01584500 | 92-602* | LG 455 |
| 01584500 | 96-041* | LG 372 |
| 01588100 | 70-710 | LG 964 |
| 01588100 | 72-725 | LG 1044 |
| 02451800 | 30-920 | LG 186 |
| 02483859 | 73-028 | LG 850 |
| 02483859 | 73-100 | LG 850 |
| 02526400 | 82-010 | LG 869 |
| 02526400 | 82-011 | LG 869 |
| 02961600 | 92-217 | LG 369 |
| 02961600 | 96-808* | LG 450 |
| 02961700 | 596-818* | LG 453 |
| 02961700 | 92-157 | LG 453 |
| 02982000 | 396-809* | LG 370 |
| 02982000 | 596-816* | LG 451 |
| 02982000 | 92-153 | LG 370 |
| 03027800 | 91-003 | LG 370 |
| 03027851 | 91-003 | LG 370 |
| 03027859 | 91-003 | LG 370 |
| 03037500 | 82-010 | LG 869 |
| 03037500 | 82-011 | LG 869 |
| 03123700 | 91-003 | LG 370 |
| 03123751 | 91-003 | LG 370 |
| 03123759 | 91-003 | LG 370 |
| 03253800 | 396-806* | LG 453 |
| 03253800 | 596-817* | LG 371 |
| 03253800 | 92-151 | LG 453 |
| 03253900 | 396-807* | LG 454 |
| 03253900 | 596-815* | LG 578 |
| 03253900 | 92-159 | LG 578 |
| 0327859 | 91-003 | LG 370 |
| 0341900 | 82-010 | LG 869 |
| 0341900 | 82-011 | LG 869 |
| 03450500 | 33-118-1 | LG 733 |
| 03485500 | 82-010 | LG 869 |
| 03485500 | 82-011 | LG 869 |
| 03498400 | 92-040 | LG 369 |
| 03498400 | 96-040* | LG 369 |
| 03498451 | 92-040 | LG 369 |
| 03551000 | 33-336 | LG 730 |
| 03607059 | 191-015 | LG 372 |
| 03607059 | 96-677* | LG 372 |
| 03615300 | 82-011 | LG 869 |
| 03615400 | 82-010 | LG 869 |
| 03624700 | 191-015 | LG 372 |
| 03624700 | 96-677* | LG 372 |
| 03624751 | 191-015 | LG 372 |
| 03624751 | 96-677* | LG 372 |
| 03624759 | 191-015 | LG 372 |
| 03624759 | 96-677* | LG 372 |
| 03625000 | 82-010 | LG 869 |
| 03625000 | 82-011 | LG 869 |
| 03643100 | 33-112 | LG 735 |
| 03789800 | 40-130 | LG 586 |
| 04159600 | 92-415 | LG 374 |
| 04159600 | 96-415* | LG 456 |
| 04916400 | 396-806* | LG 453 |
| 04916400 | 596-817* | LG 371 |
| 04919100 | 396-716* | LG 451 |
| 04919100 | 596-310* | LG 447 |
| 04919100 | 91-183 | LG 370 |
| 04919100 | 92-153 | LG 370 |
| 04919100 | 96-310* | LG 444 |
| 04920600 | 396-716* | LG 451 |
| 04920600 | 596-310* | LG 447 |
| 04920600 | 92-153 | LG 370 |
| 04920600 | 96-310* | LG 444 |
| 04920600 | 99-127 | LG 375 |
| 05403900 | 45-242 | LG 243 |
| 05404400 | 45-206 | LG 231 |
| 05404500 | 45-205 | LG 228 |
| 05405500 | 45-205 | LG 228 |
| 05406300 | 45-035 | LG 226 |
| 05406900 | 45-002 | LG 237 |
| 05407000 | 45-295 | LG 232 |
| 05408000 | 45-267 | LG 235 |
| 05408900 | 45-000 | LG 237 |
| 05408900 | 45-010 | LG 238 |
| 05408900 | 45-260 | LG 224 |
| 05409300 | 45-268 | LG 227 |
| 05412000 | 82-010 | LG 869 |
| 05412000 | 82-011 | LG 869 |
| 05412300 | 45-259 | LG 224 |
| 05415100 | 45-000 | LG 237 |
| 05415100 | 45-010 | LG 238 |
| 05416000 | 45-269 | LG 227 |
| 05416200 | 45-000 | LG 237 |
| 05416200 | 45-010 | LG 238 |
| 05417700 | 45-270 | LG 227 |
| 05418200 | 45-271 | LG 227 |
| 05418800 | 45-257 | LG 245 |
| 05435200 | 45-272 | LG 227 |
| 05500111 | 45-275 | LG 225 |
| 05502800 | 45-003 | LG 244 |
| 05503000 | 45-013 | LG 853 |
| 05503500 | 45-006 | LG 249 |
| 055039 | 45-007 | LG 853 |
| 05503900 | 45-007 | LG 853 |
| 05505800 | 45-098 | LG 243 |
| 05511000 | 45-008 | LG 853 |
| 05511200 | 45-009 | LG 853 |
| 06201800 | 81-012 | LG 802 |
| 06444200 | 82-010 | LG 869 |
| 06444200 | 82-011 | LG 869 |
| 07100124 | 72-725 | LG 1044 |
| 07200004 | 75-906 | LG 251 |
| 07200007 | 75-907 | LG 264 |
| 07200020 | 75-908 | LG 265 |
| 07200021 | 75-909 | LG 251 |
| 07200026 | 15-152 | LG 264 |
| 07200027 | 15-153 | LG 286 |
| 07200028 | 15-154 | LG 286 |
| 07200030 | 15-155 | LG 264 |
| 07200032 | 15-156 | LG 286 |
| 07200039 | 15-157 | LG 286 |
| 07200116 | 15-158 | LG 286 |
| 07200433 | 15-159 | LG 286 |
| 07200623 | 75-908 | LG 265 |
| 07202300 | 15-221 | LG 265 |
| 07204700 | 75-098 | LG 251 |
| 07205200 | 15-190 | LG 265 |
| 07205600 | 75-080 | LG 862 |
| 07206000 | 75-010 | LG 311 |
| 07206100 | 75-096 | LG 265 |
| 07206700 | 75-096 | LG 265 |
| 07207200 | 75-096 | LG 265 |
| 07207400 | 75-067 | LG 862 |
| 07208100 | 15-192 | LG 265 |
| 07208300 | 75-096 | LG 265 |
| 07208600 | 75-117 | LG 265 |
| 07208800 | 75-322 | LG 334 |
| 07209800 | 15-193 | LG 266 |
| 07210800 | 75-096 | LG 265 |
| 07211300 | 75-086 | LG 265 |
| 07211400 | 75-084 | LG 265 |
| 07212300 | 75-889 | LG 252 |
| 07213000 | 15-194 | LG 265 |
| 07213100 | 15-195 | LG 265 |
| 07213800 | 75-087 | LG 265 |
| 07216900 | 75-086 | LG 265 |
| 07217100 | 75-087 | LG 265 |
| 07219100 | 75-909 | LG 251 |
| 07223100 | 15-200 | LG 285 |
| 07223800 | 15-201 | LG 285 |
| 07224200 | 15-202 | LG 285 |
| 07225000 | 15-203 | LG 286 |
| 07225800 | 15-222 | LG 285 |
| 07226000 | 15-205 | LG 266 |
| 07232100 | 15-193 | LG 266 |
| 07234500 | 15-208 | LG 266 |
| 07234600 | 15-164 | LG 286 |
| 07234900 | 15-165 | LG 286 |
| 07235100 | 15-167 | LG 286 |
| 07236200 | 75-096 | LG 265 |
| 07236200 | 75-983 | LG 862 |
| 07236300 | 15-211 | LG 266 |
| 07238200 | 15-213 | LG 286 |
| 07239200 | 15-169 | LG 266 |
| 07239300 | 15-170 | LG 266 |
| 07239400 | 15-171 | LG 286 |
| 07240700 | 15-173 | LG 287 |
| 07241300 | 15-174 | LG 287 |
| 07241500 | 15-215 | LG 287 |
| 0724160 | 115-200 | LG 287 |
| 07241600 | 115-200 | LG 287 |
| 07241700 | 15-216 | LG 266 |

* OREGON® Gator™ replacement blade

# 2019 OEM X-Reference

| OEM No. | OREGON | Page |
|---|---|---|
| **ARIENS** | | |
| 07241800 | 15-217 | LG 287 |
| 07242300 | 15-180 | LG 287 |
| 07242800 | 15-181 | LG 266 |
| 07300101 | 34-019 | LG 821 |
| 07305400 | 78-033 | LG 834 |
| 07312559 | 34-019 | LG 821 |
| 07312700 | 34-012 | LG 821 |
| 07314000 | 34-029 | LG 821 |
| 08844200 | 34-019 | LG 821 |
| 08861600 | 396-805* | LG 452 |
| 08861600 | 91-242 | LG 371 |
| 08866800 | 396-805* | LG 452 |
| 08899100 | 396-807* | LG 454 |
| 08899100 | 596-815* | LG 578 |
| 08899100 | 92-159 | LG 578 |
| 08899300 | 396-805* | LG 452 |
| 08899300 | 91-242 | LG 371 |
| 09081200 | 396-807* | LG 454 |
| 09081200 | 596-815* | LG 578 |
| 09081200 | 92-159 | LG 578 |
| 09225400 | 33-119-1 | LG 734 |
| 09232700 | 33-120 | LG 734 |
| 09232700 | 33-138 | LG 738 |
| 09254700 | 392-416* | LG 374 |
| 09290500 | 392-416* | LG 374 |
| 09290500 | 92-416 | LG 456 |
| 09290600 | 392-416* | LG 374 |
| 09407700 | 33-121 | LG 734 |
| 10164 | 73-029 | LG 847 |
| 1016400 | 73-029 | LG 847 |
| 1016459 | 73-029 | LG 847 |
| 10165 | 73-100 | LG 850 |
| 10195 | 80-740 | LG 852 |
| 10198 | 04-723 | |
| 10274 | 45-035 | LG 226 |
| 1120300 | 91-005 | LG 458 |
| 11228 | 45-000 | LG 237 |
| 11285 | 91-005 | LG 458 |
| 1128500 | 91-005 | LG 458 |
| 11370 | 91-005 | LG 458 |
| 1137000 | 91-005 | LG 458 |
| 1137051 | 91-005 | LG 458 |
| 1137059 | 91-005 | LG 458 |
| 1182400 | 91-005 | LG 458 |
| 1545600 | 33-002 | LG 946 |
| 1584500 | 92-602* | LG 455 |
| 1588100 | 72-725 | LG 1044 |
| 15883 | 33-375 | LG 942 |
| 1588300 | 33-375 | LG 942 |
| 1600500 | 96-040* | LG 369 |
| 17080 | 76-067-0 | LG 726 |
| 170800 | 76-067-0 | LG 726 |
| 191256 | 33-028 | LG 947 |
| 191700 | 33-130 | LG 733 |
| 192507 | 33-334 | LG 730 |
| 20033200 | 35-006 | LG 808 |
| 200675 | 45-000 | LG 237 |
| 200675 | 45-208 | LG 245 |
| 206377 | 45-000 | LG 237 |
| 206377 | 45-208 | LG 245 |
| 20637700 | 45-000 | LG 237 |
| 20637700 | 45-208 | LG 245 |
| 210798 | 34-037 | LG 821 |
| 21085400 | 91-003 | LG 370 |
| 21397200 | 83-404 | LG 818 |
| 21535800 | 69-282 | LG 817 |
| 21535800 | 83-501 | LG 817 |
| 21535900 | 30-527 | LG 202 |
| 21536900 | 30-845 | LG 208 |
| 21538200 | 30-835 | LG 200 |
| 21538200 | 69-322 | LG 200 |
| 21541500 | 07-103 | LG 775 |
| 21542700 | 30-130 | LG 205 |
| 21546095 | 195-032 | LG 425 |
| 21546095 | 596-900* | LG 380 |
| 21546095 | 96-900* | LG 526 |
| 21546235 | 195-072 | LG 530 |
| 21546235 | 595-605* | LG 422 |
| 21546235 | 95-605* | LG 463 |
| 21546611 | 195-070 | LG 469 |
| 21546611 | 596-370* | LG 427 |
| 21546611 | 96-370* | LG 533 |
| 21546848 | 595-605* | LG 422 |
| 21546848 | 95-082 | LG 372 |
| 21546848 | 95-605* | LG 463 |
| 21547257 | 596-615* | LG 529 |
| 21547257 | 95-068 | LG 376 |
| 21547257 | 96-615* | LG 461 |
| 21547939 | 195-062 | LG 376 |
| 21547939 | 596-615* | LG 529 |
| 21547939 | 96-615* | LG 461 |
| 22013 | 76-070-0 | LG 726 |
| 22153 | 04-721 | |
| 23478 | 33-350 | LG 949 |
| 24518 | 30-920 | LG 186 |
| 24519 | 30-044 | LG 179 |
| 24519 | 30-825 | LG 179 |
| 24599 | 73-028 | LG 850 |
| 24599 | 73-100 | LG 850 |
| 2483859 | 73-028 | LG 850 |
| 2483859 | 73-100 | LG 850 |
| 2526400 | 82-010 | LG 869 |
| 2526400 | 82-011 | LG 869 |
| 273000 | 92-153 | LG 370 |
| 29171 | 45-104 | LG 939 |
| 2961700 | 92-157 | LG 453 |
| 3003 | 76-067-0 | LG 726 |
| 300300 | 76-067-0 | LG 726 |
| 30278 | 91-003 | LG 370 |
| 3027800 | 91-003 | LG 370 |
| 3027851 | 91-003 | LG 370 |
| 3027859 | 91-003 | LG 370 |
| 3037500 | 82-010 | LG 869 |
| 3037500 | 82-011 | LG 869 |
| 30387 | 33-330 | LG 729 |
| 3042800 | 33-317-0 | LG 729 |
| 30577 | 33-330 | LG 729 |
| 30577 | 33-331 | LG 730 |
| 3057700 | 33-330 | LG 729 |
| 3057700 | 33-331 | LG 730 |
| 3057700 | 33-337 | LG 730 |
| 30908 | 33-113 | LG 740 |
| 3090800 | 33-113 | LG 740 |
| 30957 | 33-027 | LG 947 |
| 3095700 | 33-027 | LG 947 |
| 31129 | 45-114 | LG 938 |
| 31130 | 45-117 | LG 938 |
| 31152 | 33-393 | LG 943 |
| 3123700 | 91-003 | LG 370 |
| 3123751 | 91-003 | LG 370 |
| 3123759 | 91-003 | LG 370 |
| 31486 | 83-300 | LG 819 |
| 31928 | 83-300 | LG 819 |
| 319460 | 82-010 | LG 869 |
| 32483 | 76-070-0 | LG 726 |
| 3253800 | 92-151 | LG 453 |
| 3253900 | 92-159 | LG 578 |
| 327859 | 91-003 | LG 370 |
| 341900 | 82-010 | LG 869 |
| 341900 | 82-011 | LG 869 |
| 3450500 | 33-118-1 | LG 733 |
| 3485500 | 82-010 | LG 869 |
| 3485500 | 82-011 | LG 869 |
| 34909 | 33-393 | LG 943 |
| 3498400 | 92-040 | LG 369 |
| 3498451 | 92-040 | LG 369 |
| 34986 | 45-114 | LG 938 |
| 35510 | 33-334 | LG 730 |
| 35510 | 33-336 | LG 730 |
| 3551000 | 33-334 | LG 730 |
| 3551000 | 33-335 | LG 730 |
| 3551000 | 33-336 | LG 730 |
| 357100 | 33-015 | LG 948 |
| 36018 | 33-111 | LG 735 |
| 3601800 | 33-111 | LG 735 |
| 36024 | 33-410 | LG 947 |
| 3602400 | 33-410 | LG 947 |
| 3615300 | 82-011 | LG 869 |
| 3615400 | 82-010 | LG 869 |
| 3625000 | 82-010 | LG 869 |
| 3625000 | 82-011 | LG 869 |
| 36431 | 33-112 | LG 735 |
| 3643100 | 33-112 | LG 735 |
| 41545 | 15-184 | LG 285 |
| 41599 | 15-185 | LG 285 |
| 432100 | 33-317-0 | LG 729 |
| 450300 | 92-151 | LG 453 |
| 49029 | 15-220 | LG 285 |
| 4919100 | 92-153 | LG 370 |
| 4920600 | 92-153 | LG 370 |
| 49270 | 15-187 | LG 285 |
| 510015 | 80-740 | LG 852 |
| 51001500 | 80-740 | LG 852 |
| 510016 | 80-741 | LG 852 |
| 510016 | 80-742 | LG 852 |
| 51001600 | 80-741 | LG 852 |
| 51001600 | 80-742 | LG 852 |
| 51134 | 34-019 | LG 821 |
| 51213 | 15-188 | LG 285 |
| 522100 | 33-002 | LG 946 |
| 532005 | 80-742 | LG 852 |
| 53200500 | 80-742 | LG 852 |
| 54044 | 45-206 | LG 231 |
| 5404400 | 45-206 | LG 231 |
| 54045 | 45-205 | LG 228 |
| 5404500 | 45-205 | LG 228 |
| 5405500 | 45-205 | LG 228 |
| 54063 | 45-035 | LG 226 |
| 5406300 | 45-035 | LG 226 |
| 54069 | 45-002 | LG 237 |
| 5406900 | 45-002 | LG 237 |
| 54071 | 45-257 | LG 245 |
| 54073 | 45-295 | LG 232 |
| 54089 | 45-000 | LG 237 |
| 54089 | 45-208 | LG 245 |
| 5408900 | 45-000 | LG 237 |
| 5408900 | 45-010 | LG 238 |
| 54120 | 45-295 | LG 232 |
| 5412000 | 82-010 | LG 869 |
| 5412000 | 82-011 | LG 869 |
| 54123 | 45-259 | LG 224 |
| 54141 | 45-000 | LG 237 |
| 54151 | 45-208 | LG 245 |
| 5415100 | 45-000 | LG 237 |
| 5415100 | 45-010 | LG 238 |
| 54161 | 45-260 | LG 224 |
| 54162 | 45-000 | LG 237 |
| 54162 | 45-010 | LG 238 |
| 54162 | 45-208 | LG 245 |
| 54162 | 45-260 | LG 224 |
| 5416200 | 45-000 | LG 237 |
| 5416200 | 45-010 | LG 238 |
| 54188 | 45-257 | LG 245 |
| 5418800 | 45-257 | LG 245 |
| 54248 | 45-295 | LG 232 |
| 54355 | 45-295 | LG 232 |
| 55028 | 45-003 | LG 244 |
| 5502800 | 45-003 | LG 244 |
| 55030 | 45-013 | LG 853 |
| 5503000 | 45-013 | LG 853 |
| 55034 | 45-007 | LG 853 |
| 55035 | 45-006 | LG 249 |
| 5503500 | 45-006 | LG 249 |
| 55039 | 45-007 | LG 853 |
| 5503900 | 45-007 | LG 853 |
| 55058 | 45-098 | LG 243 |
| 5505800 | 45-098 | LG 243 |
| 55102 | 45-009 | LG 853 |
| 55110 | 45-008 | LG 853 |
| 5511000 | 45-008 | LG 853 |
| 55112 | 45-009 | LG 853 |
| 5511200 | 45-009 | LG 853 |
| 55113 | 45-007 | LG 853 |
| 55114 | 45-009 | LG 853 |
| 55152 | 45-008 | LG 853 |
| 55430 | 33-117 | LG 733 |
| 554300 | 33-117 | LG 733 |
| 574100 | 33-117 | LG 733 |
| 574200 | 33-121 | LG 734 |
| 59071 | 80-742 | LG 852 |
| 5907100 | 80-741 | LG 852 |
| 59201000 | 82-041 | LG 890 |
| 59202600 | 82-042 | LG 891 |
| 62828 | 15-715 | LG 315 |
| 62870 | 04-723 | |
| 6444200 | 82-010 | LG 869 |
| 6444200 | 82-011 | LG 869 |
| 66003 | 02-535 | |
| 66009 | 02-531 | |
| 690003 | 45-002 | LG 237 |
| 69000300 | 45-002 | LG 237 |
| 70511 | 04-721 | |
| 70760900 | 396-807* | LG 454 |
| 70760900 | 596-815* | LG 578 |
| 70760900 | 92-159 | LG 578 |
| 70763400 | 596-818* | LG 453 |
| 70763400 | 92-157 | LG 453 |
| 7100124 | 72-725 | LG 1044 |
| 71253 | 72-737 | LG 1045 |
| 7125300 | 72-737 | LG 1045 |
| 71301 | 72-737 | LG 1045 |
| 7130100 | 72-737 | LG 1045 |
| 7200004 | 75-906 | LG 251 |
| 7200007 | 75-907 | LG 264 |
| 7200020 | 75-908 | LG 265 |
| 7200021 | 75-909 | LG 251 |
| 7200435 | 15-160 | LG 253 |
| 7200623 | 75-908 | LG 265 |
| 72023 | 15-221 | LG 265 |
| 72047 | 75-098 | LG 251 |
| 7204700 | 75-098 | LG 251 |
| 72052 | 15-190 | LG 265 |
| 72056 | 75-080 | LG 862 |
| 7205600 | 75-080 | LG 862 |
| 72061 | 75-096 | LG 265 |
| 7206100 | 75-096 | LG 265 |
| 7206600 | 75-634 | LG 314 |
| 72067 | 75-096 | LG 265 |
| 7206700 | 75-096 | LG 265 |
| 72072 | 75-096 | LG 265 |
| 7207200 | 75-096 | LG 265 |
| 72074 | 75-067 | LG 862 |
| 7207400 | 75-067 | LG 862 |
| 72081 | 15-192 | LG 265 |
| 72083 | 75-096 | LG 265 |
| 7208300 | 75-096 | LG 265 |
| 72086 | 75-117 | LG 265 |
| 7208600 | 75-117 | LG 265 |
| 72098 | 15-193 | LG 266 |
| 7209900 | 75-631 | LG 314 |
| 72108 | 75-096 | LG 265 |
| 7210800 | 75-096 | LG 265 |
| 72113 | 75-086 | LG 265 |
| 7211300 | 75-086 | LG 265 |
| 72114 | 75-084 | LG 265 |
| 7211400 | 75-084 | LG 265 |
| 72130 | 15-194 | LG 265 |
| 72131 | 15-195 | LG 265 |
| 72138 | 75-087 | LG 265 |

X



* OREGON® Gator™ replacement blade

| OEM No. | OREGON | Page |
|---|---|---|
| **ARIENS** | | |
| 7213800 | 75-087 | LG 265 |
| 72169 | 75-086 | LG 265 |
| 7216900 | 75-086 | LG 265 |
| 72171 | 75-087 | LG 265 |
| 7217100 | 75-087 | LG 265 |
| 7219100 | 75-909 | LG 251 |
| 72231 | 15-200 | LG 285 |
| 72238 | 15-201 | LG 285 |
| 72242 | 15-202 | LG 285 |
| 72258 | 15-222 | LG 285 |
| 72260 | 15-205 | LG 266 |
| 72345 | 15-208 | LG 266 |
| 7235500 | 15-210 | LG 266 |
| 7236200 | 75-983 | LG 862 |
| 72363 | 15-211 | LG 266 |
| 72382 | 15-213 | LG 286 |
| 7241500 | 15-215 | LG 287 |
| 724160 | 115-200 | LG 287 |
| 7241600 | 115-200 | LG 287 |
| 7241700 | 15-216 | LG 266 |
| 7241800 | 15-217 | LG 287 |
| 7242000 | 15-179 | LG 287 |
| 73054 | 34-012 | LG 821 |
| 73061 | 34-007 | LG 826 |
| 73061 | 34-024 | LG 822 |
| 7306100 | 78-021 | LG 832 |
| 73109 | 34-030 | LG 821 |
| 73114 | 34-037 | LG 821 |
| 73123 | 34-012 | LG 821 |
| 73123 | 34-029 | LG 821 |
| 73125 | 34-019 | LG 821 |
| 73127 | 34-002 | LG 821 |
| 73128 | 34-001 | LG 821 |
| 73140 | 34-029 | LG 821 |
| 7500108 | 33-089 | LG 946 |
| 75093 | 07-392 | LG 767 |
| 75114 | 07-392 | LG 767 |
| 88281 | 33-028 | LG 947 |
| 8828100 | 33-028 | LG 947 |
| 8861600 | 91-242 | LG 371 |
| 8899100 | 92-159 | LG 578 |
| 8899300 | 91-242 | LG 371 |
| 9081200 | 92-159 | LG 578 |
| 9225400 | 33-119-1 | LG 734 |
| 9232700 | 33-120 | LG 734 |
| 9240 | 15-218 | LG 285 |
| 9407700 | 33-121 | LG 734 |
| TCU18744 | 72-032 | LG 1038 |
| **ARTSWAY & ROTECH** | | |
| 66102 | 91-591 | LG 481 |
| 66967 | 91-590 | LG 492 |
| **ATLAS** | | |
| 9924 | 75-120 | LG 300 |
| **AUTOMOTIVE ASSOCIATES** | | |
| 754-0145 | 75-145 | LG 300 |
| 754-0151 | 75-004 | LG 301 |
| 754-0178 | 75-179 | LG 310 |
| 754-0201 | 75-441 | LG 334 |
| 754-0234 | 75-441 | LG 334 |
| 754-0935 | 75-092 | LG 304 |
| 954-0145 | 75-145 | LG 300 |
| 954-0145A | 75-145 | LG 300 |
| 954-0151 | 75-004 | LG 301 |
| 954-015A | 75-145 | LG 300 |
| 954-0178 | 75-179 | LG 310 |
| 954-0201 | 75-441 | LG 334 |
| 954-0234 | 75-441 | LG 334 |
| 954-0935 | 75-092 | LG 304 |
| **AYP** | | |
| 009040 | 45-057 | LG 249 |

| OEM No. | OREGON | Page |
|---|---|---|
| 100140M | 95-014 | LG 374 |
| 100140M | 95-607* | LG 397 |
| 100669K | 95-015 | LG 400 |
| 100699X | 82-678 | LG 904 |
| 101273 | 35-021 | LG 810 |
| 101273M | 35-021 | LG 810 |
| 101273X | 35-021 | LG 810 |
| 101344L | 78-121 | LG 827 |
| 101477X | 82-677 | LG 903 |
| 101479X | 82-677 | LG 903 |
| 101674X | 05-072 | LG 1023 |
| 102050X | 82-677 | LG 903 |
| 102403X | 78-110 | LG 833 |
| 102655X | 15-688 | LG 315 |
| 102792X | 45-128 | LG 228 |
| 102972X | 33-397 | LG 942 |
| 103R | 33-331 | LG 730 |
| 103R | 33-334 | LG 730 |
| 103R | 33-335 | LG 730 |
| 103R | 33-336 | LG 730 |
| 104360X | 34-046 | LG 824 |
| 104445X | 33-027 | LG 947 |
| 104679X | 34-008 | LG 821 |
| 104679X | 34-015 | LG 821 |
| 104926X | 82-678 | LG 904 |
| 105307X | 34-036 | LG 821 |
| 105313X | 78-043 | LG 824 |
| 105477X | 82-679 | LG 870 |
| 105483X | 82-680 | LG 870 |
| 105722X | 82-678 | LG 904 |
| 106037X | 82-680 | LG 870 |
| 106038X | 82-679 | LG 870 |
| 106038X | 95-058 | LG 458 |
| 106040X | 82-495 | LG 870 |
| 106041X | 396-716* | LG 451 |
| 106041X | 596-310* | LG 447 |
| 106041X | 82-495 | LG 870 |
| 106041X | 96-310* | LG 444 |
| 106085X | 75-107 | LG 254 |
| 106316 | 33-114 | LG 734 |
| 106316X | 33-114 | LG 734 |
| 106634X | 95-015 | LG 400 |
| 106635X | 95-014 | LG 374 |
| 106635X | 95-607* | LG 397 |
| 106734 | 05-020 | LG 913 |
| 106863X | 15-691 | LG 260 |
| 107610 | 72-094 | LG 1042 |
| 108218 | 33-110 | LG 735 |
| 108218X | 33-110 | LG 735 |
| 10830 | 75-974 | LG 294 |
| 108597X | 15-691 | LG 260 |
| 108824X | 33-035 | LG 742 |
| 109081X | 33-331 | LG 730 |
| 109081X | 33-334 | LG 730 |
| 109081X | 33-335 | LG 730 |
| 109081X | 33-336 | LG 730 |
| 109550X | 33-114 | LG 734 |
| 109553X | 33-028 | LG 947 |
| 109685X | 82-678 | LG 904 |
| 109748 | 33-317-0 | LG 729 |
| 109748X | 33-317-0 | LG 729 |
| 109869X | 33-027 | LG 947 |
| 109946 | 33-334 | LG 730 |
| 109946X | 33-331 | LG 730 |
| 109946X | 33-334 | LG 730 |
| 109946X | 33-335 | LG 730 |
| 109946X | 33-336 | LG 730 |
| 110411 | 15-472 | LG 259 |
| 1104585XMS | 45-257 | LG 245 |
| 110484X | 34-034 | LG 821 |
| 110485 | 45-257 | LG 245 |
| 110485X | 45-257 | LG 245 |
| 110485XCS | 45-257 | LG 245 |
| 110832 | 15-473 | LG 288 |
| 110832X | 33-331 | LG 730 |

| OEM No. | OREGON | Page |
|---|---|---|
| 110832X | 33-337 | LG 730 |
| 110883 | 75-108 | LG 289 |
| 110883X | 75-108 | LG 289 |
| 110884X | 75-194 | LG 289 |
| 111924X | 15-693 | LG 311 |
| 112053 | 195-072 | LG 530 |
| 112053 | 595-605* | LG 422 |
| 112053 | 95-605* | LG 463 |
| 112529 | 15-474 | LG 288 |
| 12000029 | 02-020 | |
| 120262X | 95-034 | LG 377 |
| 120382X | 45-128 | LG 228 |
| 120626X | 95-034 | LG 377 |
| 120754X | 45-128 | LG 228 |
| 121263X | 95-031 | LG 377 |
| 121305 | 33-019 | LG 948 |
| 121305X | 33-019 | LG 948 |
| 121617X | 82-679 | LG 870 |
| 121622X | 82-680 | LG 870 |
| 121657X | 82-679 | LG 870 |
| 121657X | 95-058 | LG 458 |
| 121658X | 82-680 | LG 870 |
| 121676X | 82-678 | LG 904 |
| 121687 | 82-678 | LG 904 |
| 121687X | 82-678 | LG 904 |
| 121687XCS | 82-678 | LG 904 |
| 121687XMS | 82-678 | LG 904 |
| 121704X | 82-495 | LG 870 |
| 121705X | 396-716* | LG 451 |
| 121705X | 596-310* | LG 447 |
| 121705X | 82-495 | LG 870 |
| 121705X | 96-310* | LG 444 |
| 121922X | 45-073 | LG 227 |
| 122265X | 95-014 | LG 374 |
| 122265X | 95-607* | LG 397 |
| 123713X | 05-020 | LG 913 |
| 123848X | 45-128 | LG 228 |
| 124293X | 15-695 | LG 260 |
| 125104X | 33-386 | LG 942 |
| 125907X | 175-171 | LG 261 |
| 125907X | 75-171 | LG 289 |
| 126112X | 33-110 | LG 735 |
| 126338X | 95-034 | LG 377 |
| 126520X | 75-935 | LG 255 |
| 126847 | 45-128 | LG 228 |
| 126847X | 45-128 | LG 228 |
| 127783 | 34-049 | LG 824 |
| 12784 | 195-033 | LG 400 |
| 12784 | 595-601* | LG 400 |
| 12784 | 95-601* | LG 423 |
| 127841 | 595-613* | LG 463 |
| 127841 | 95-036 | LG 463 |
| 127841 | 95-613* | LG 463 |
| 127842 | 195-033 | LG 400 |
| 127842 | 595-601* | LG 400 |
| 127842 | 95-601* | LG 423 |
| 127843 | 195-032 | LG 425 |
| 127843 | 596-900* | LG 380 |
| 127843 | 96-900* | LG 526 |
| 128774 | 82-024 | LG 871 |
| 128774 | 82-220 | LG 871 |
| 128774CS | 82-220 | LG 871 |
| 128774MS | 82-220 | LG 871 |
| 129206 | 44-371 | LG 834 |
| 129861 | 44-370 | LG 834 |
| 129895 | 45-259 | LG 224 |
| 129963 | 09-260 | LG 870 |
| 130652 | 95-006 | LG 397 |
| 130794 | 82-014 | LG 871 |
| 130794 | 82-225 | LG 871 |
| 130794CS | 82-014 | LG 871 |
| 130794CS | 82-225 | LG 871 |
| 130794MS | 82-014 | LG 871 |
| 130794MS | 82-225 | LG 871 |
| 130794WA | 82-014 | LG 871 |

| OEM No. | OREGON | Page |
|---|---|---|
| 130794WA | 82-225 | LG 871 |
| 130801 | 75-167 | LG 289 |
| 130861 | 46-325 | LG 701 |
| 130969 | 175-106 | LG 261 |
| 130969 | 75-106 | LG 261 |
| 130969MS | 75-106 | LG 261 |
| 131006 | 75-163 | LG 261 |
| 131264 | 75-097 | LG 289 |
| 131264MS | 75-097 | LG 289 |
| 131290 | 75-936 | LG 290 |
| 131322 | 595-601* | LG 400 |
| 131322 | 95-047 | LG 378 |
| 131322 | 95-601* | LG 423 |
| 131491 | 76-034 | |
| 131494 | 34-046 | LG 824 |
| 132801 | 75-889 | LG 252 |
| 133035 | 75-890 | LG 289 |
| 133107 | 60-105 | LG 702 |
| 133346 | 95-051 | LG 465 |
| 133348 | 195-021 | LG 468 |
| 133348 | 595-602* | LG 403 |
| 133348 | 95-602* | LG 403 |
| 133957 | 72-094 | LG 1042 |
| 134148 | 195-003 | LG 400 |
| 134148 | 595-601* | LG 400 |
| 134148 | 95-601* | LG 423 |
| 134148M | 195-003 | LG 400 |
| 134148M | 595-601* | LG 400 |
| 134148M | 95-601* | LG 423 |
| 134148X | 195-003 | LG 400 |
| 134148X | 595-601* | LG 400 |
| 134148X | 95-601* | LG 423 |
| 134149 | 195-005 | LG 373 |
| 134149 | 596-900* | LG 380 |
| 134149 | 96-900* | LG 526 |
| 134768 | 195-021 | LG 468 |
| 134768 | 595-602* | LG 403 |
| 134768 | 95-602* | LG 403 |
| 134871 | 95-051 | LG 465 |
| 136376 | 81-013 | LG 802 |
| 136572 | 44-302 | LG 841 |
| 136818 | 82-680 | LG 870 |
| 136819 | 82-680 | LG 870 |
| 136874 | 76-040 | LG 941 |
| 137078 | 175-164 | LG 262 |
| 137078 | 75-164 | LG 262 |
| 137140 | 33-110 | LG 735 |
| 137152 | 82-221 | LG 872 |
| 137153 | 175-195 | LG 289 |
| 137153 | 75-195 | LG 254 |
| 137380 | 595-609* | LG 461 |
| 137380 | 95-018 | LG 399 |
| 137380 | 95-609* | LG 376 |
| 137553 | 85-023 | LG 907 |
| 137645 | 85-017 | LG 907 |
| 137646 | 85-017 | LG 907 |
| 138255 | 75-167 | LG 289 |
| 138255CS | 75-167 | LG 289 |
| 138255MS | 75-167 | LG 289 |
| 138255WA | 75-167 | LG 289 |
| 138406 | 33-331 | LG 730 |
| 138406 | 33-334 | LG 730 |
| 138406X | 33-334 | LG 730 |
| 138406X | 33-335 | LG 730 |
| 138406X | 33-336 | LG 730 |
| 138496 | 595-613* | LG 463 |
| 138496 | 95-036 | LG 463 |
| 138496 | 95-613* | LG 463 |
| 138497 | 195-003 | LG 400 |
| 138497 | 595-601* | LG 400 |
| 138497 | 95-601* | LG 423 |
| 138498 | 195-032 | LG 425 |
| 138498 | 596-900* | LG 380 |
| 138498 | 96-900* | LG 526 |
| 138791 | 195-032 | LG 425 |

X

* OREGON® Gator™ replacement blade

# 2019 OEM X-Reference

| OEM No. | OREGON | Page |
|---|---|---|
| **AYP** | | |
| 138791 | 596-900* | LG 380 |
| 138791 | 96-900* | LG 526 |
| 138970 | 195-033 | LG 400 |
| 138970 | 595-601* | LG 400 |
| 138970 | 95-601* | LG 423 |
| 138971 | 195-032 | LG 425 |
| 138971 | 596-900* | LG 380 |
| 138971 | 96-900* | LG 526 |
| 139245 | 34-049 | LG 824 |
| 139573 | 175-169 | LG 290 |
| 139573 | 75-169 | LG 290 |
| 139744MS | 195-003 | LG 400 |
| 139744MS | 595-601* | LG 400 |
| 139744MS | 95-601* | LG 423 |
| 139774 | 195-003 | LG 400 |
| 139774 | 595-601* | LG 400 |
| 139774 | 95-601* | LG 423 |
| 139775 | 195-019 | LG 466 |
| 139775 | 596-900* | LG 380 |
| 139775 | 96-900* | LG 526 |
| 139868 | 76-015 | LG 804 |
| 140218 | 75-196 | LG 290 |
| 140294 | 175-000 | LG 262 |
| 140294 | 75-000 | LG 262 |
| 140294MS | 75-000 | LG 262 |
| 140301 | 33-383 | LG 944 |
| 140401 | 33-099 | LG 946 |
| 140402 | 33-099 | LG 946 |
| 140403 | 33-099 | LG 946 |
| 140404 | 33-081 | LG 946 |
| 141114 | 195-021 | LG 468 |
| 141114 | 595-602* | LG 403 |
| 141114 | 95-602* | LG 403 |
| 141416 | 15-700 | LG 259 |
| 142204 | 72-458 | LG 1031 |
| 142600 | 33-110 | LG 735 |
| 143427 | 72-458 | LG 1031 |
| 143596 | 72-458 | LG 1031 |
| 143651 | 82-510 | LG 872 |
| 143969 | 95-034 | LG 377 |
| 143978 | 95-031 | LG 377 |
| 144200 | 175-099 | LG 262 |
| 144200 | 75-099 | LG 262 |
| 144200CS | 75-099 | LG 262 |
| 144200MS | 75-099 | LG 262 |
| 144767 | 595-614* | LG 459 |
| 144767 | 95-052 | LG 398 |
| 144767 | 95-614* | LG 375 |
| 144959 | 175-197 | LG 290 |
| 144959 | 75-197 | LG 262 |
| 145 14 50-28 | 33-111 | LG 735 |
| 145028 | 33-111 | LG 735 |
| 145106 | 95-051 | LG 465 |
| 145499 | 33-397 | LG 942 |
| 145673 | 33-334 | LG 730 |
| 145708 | 595-614* | LG 459 |
| 145708 | 95-045 | LG 374 |
| 145708 | 95-614* | LG 375 |
| 146154 | 33-331 | LG 730 |
| 146154 | 33-334 | LG 730 |
| 146154 | 33-336 | LG 730 |
| 146154CS | 33-334 | LG 730 |
| 146154MS | 33-334 | LG 730 |
| 146283 | 33-081 | LG 946 |
| 146323 | 46-322 | LG 701 |
| 1465 | 75-164 | LG 262 |
| 146527 | 75-164 | LG 262 |
| 148699 | 33-350 | LG 949 |
| 148763 | 175-170 | LG 290 |
| 148763 | 75-170 | LG 290 |
| 149416 | 33-081 | LG 946 |
| 150340 | 72-001 | LG 1031 |
| 150340 | 72-458 | LG 1031 |
| 150341 | 72-139 | LG 1032 |
| 151140 | 45-146 | LG 804 |
| 151141 | 45-145 | LG 804 |
| 151156 | 72-458 | LG 1031 |
| 152202 | 195-021 | LG 468 |
| 152202 | 595-602* | LG 403 |
| 152202 | 95-602* | LG 403 |
| 152443 | 595-614* | LG 459 |
| 152443 | 95-045 | LG 374 |
| 152443 | 95-614* | LG 375 |
| 153532 | 44-371 | LG 834 |
| 153535 | 44-370 | LG 834 |
| 153535CS | 44-370 | LG 834 |
| 153535MS | 44-370 | LG 834 |
| 153664 | 33-026 | LG 947 |
| 154959 | 33-081 | LG 946 |
| 154963 | 33-081 | LG 946 |
| 155191 | 34-046 | LG 824 |
| 1553H | 45-205 | LG 228 |
| 1553H | 45-206 | LG 231 |
| 1554H | 45-205 | LG 228 |
| 1554H | 45-206 | LG 231 |
| 155944 | 72-458 | LG 1031 |
| 156493 | 78-053 | LG 824 |
| 156546 | 76-041 | LG 940 |
| 156581 | 60-108 | LG 703 |
| 157013 | 72-458 | LG 1031 |
| 157033 | 595-614* | LG 459 |
| 157033 | 95-052 | LG 398 |
| 157033 | 95-614* | LG 375 |
| 157101 | 195-021 | LG 468 |
| 157101 | 595-602* | LG 403 |
| 157101 | 95-602* | LG 403 |
| 157179 | 72-458 | LG 1031 |
| 157769 | 75-164 | LG 262 |
| 158913 | 33-397 | LG 942 |
| 159267 | 595-621* | LG 467 |
| 159267 | 95-071 | LG 402 |
| 159267 | 95-621* | LG 402 |
| 159705 | 595-614* | LG 459 |
| 159705 | 95-052 | LG 398 |
| 159705 | 95-614* | LG 375 |
| 160395 | 76-042 | LG 939 |
| 160793 | 42-555 | LG 803 |
| 160855 | 75-167 | LG 289 |
| 160889 | 33-112 | LG 735 |
| 161343 | 33-026 | LG 947 |
| 161740 | 72-458 | LG 1031 |
| 1629J | 75-115 | LG 260 |
| 163819 | 595-614* | LG 459 |
| 163819 | 95-045 | LG 374 |
| 163819 | 95-614* | LG 375 |
| 163968 | 33-376 | LG 942 |
| 165481 | 85-034 | LG 908 |
| 165482 | 85-034 | LG 908 |
| 165555 | 15-704 | LG 311 |
| 165626 | 78-045 | LG 828 |
| 165631 | 15-705 | LG 315 |
| 165632 | 75-897 | LG 262 |
| 165746 | 72-312 | LG 1038 |
| 165833 | 595-621* | LG 467 |
| 165833 | 95-057 | LG 380 |
| 165833 | 95-621* | LG 402 |
| 166060 | 75-911 | LG 262 |
| 166917 | 72-458 | LG 1031 |
| 168552 | 60-108 | LG 703 |
| 169022 | 05-022 | LG 913 |
| 169178 | 15-708 | LG 312 |
| 169416 | 33-081 | LG 946 |
| 169417 | 33-081 | LG 946 |
| 169676 | 60-525 | LG 702 |
| 169778 | 15-223 | LG 259 |
| 169832 | 45-142 | LG 939 |
| 170140 | 15-711 | LG 259 |
| 170146 | 81-013 | LG 802 |
| 170263 | 72-458 | LG 1031 |
| 170698 | 595-614* | LG 459 |
| 170698 | 95-052 | LG 398 |
| 170698 | 95-614* | LG 375 |
| 173436 | 44-370 | LG 834 |
| 173437 | 78-054 | LG 824 |
| 173438 | 34-046 | LG 824 |
| 173535 | 44-371 | LG 834 |
| 173901 | 78-053 | LG 824 |
| 173920 | 195-062 | LG 376 |
| 173920 | 596-615* | LG 529 |
| 173920 | 96-615* | LG 461 |
| 173921 | 596-615* | LG 529 |
| 173921 | 95-068 | LG 376 |
| 173921 | 96-615* | LG 461 |
| 174356 | 82-015 | |
| 174358 | 82-015 | |
| 174367 | 33-122-1 | LG 734 |
| 174368 | 75-912 | LG 255 |
| 174368A | 175-912 | LG 291 |
| 174368A | 75-912 | LG 255 |
| 174369 | 175-654 | LG 263 |
| 174369 | 75-654 | LG 263 |
| 174549 | 45-257 | LG 245 |
| 174651 | 33-081 | LG 946 |
| 174652 | 33-081 | LG 946 |
| 174653 | 33-081 | LG 946 |
| 174762 | 73-052 | LG 850 |
| 174762X431 | 73-052 | LG 850 |
| 174762X479 | 73-052 | LG 850 |
| 174873 | 72-031 | LG 1038 |
| 174883 | 175-913 | LG 262 |
| 174883 | 75-913 | LG 291 |
| 174978 | 75-898 | LG 262 |
| 175064 | 595-621* | LG 467 |
| 175064 | 95-057 | LG 380 |
| 175064 | 95-621* | LG 402 |
| 175121 | 45-143 | LG 939 |
| 175436 | 75-914 | LG 291 |
| 175442 | 33-376 | LG 942 |
| 175566 | 33-376 | LG 942 |
| 175689 | 76-031 | LG 804 |
| 175820 | 78-052 | LG 824 |
| 176066 | 72-313 | LG 1038 |
| 176084 | 595-614* | LG 459 |
| 176084 | 95-052 | LG 398 |
| 176084 | 95-614* | LG 375 |
| 176138 | 33-026 | LG 947 |
| 176556 | 60-107 | LG 703 |
| 177284 | 78-051 | LG 824 |
| 177968 | 78-013 | LG 825 |
| 178138 | 115-029 | LG 255 |
| 178777 | 73-053 | LG 850 |
| 178777X431 | 73-053 | LG 850 |
| 178777X479 | 73-053 | LG 850 |
| 179092 | 15-712 | LG 260 |
| 179114 | 78-056 | LG 825 |
| 179748 | 05-021 | LG 913 |
| 180054 | 195-062 | LG 376 |
| 180054 | 596-615* | LG 529 |
| 180054 | 96-615* | LG 461 |
| 180074 | 82-225 | LG 871 |
| 180214 | 75-899 | LG 263 |
| 180755 | 72-458 | LG 1031 |
| 180767 | 72-014 | LG 1031 |
| 180773 | 72-076 | LG 1031 |
| 180775 | 72-077 | LG 1031 |
| 180808 | 175-654 | LG 263 |
| 180808 | 75-654 | LG 263 |
| 182158 | 60-000 | LG 702 |
| 182212 | 15-224 | LG 260 |
| 183281 | 60-110 | LG 703 |
| 183533 | 115-222 | LG 264 |
| 183567 | 60-109 | LG 703 |
| 183688 | 15-225 | LG 260 |
| 184058 | 78-014 | LG 825 |
| 184093 | 73-052 | LG 850 |
| 184094 | 73-053 | LG 850 |
| 184588 | 60-103 | LG 702 |
| 184590 | 65-002 | LG 340 |
| 185476 | 15-226 | LG 260 |
| 187254 | 195-072 | LG 530 |
| 187254 | 595-605* | LG 422 |
| 187254 | 95-605* | LG 463 |
| 187255 | 595-605* | LG 422 |
| 187255 | 95-082 | LG 372 |
| 187255 | 95-605* | LG 463 |
| 187256 | 195-072 | LG 530 |
| 187256 | 595-605* | LG 422 |
| 187256 | 95-605* | LG 463 |
| 187281 | 82-126 | LG 873 |
| 187283 | 75-810 | LG 257 |
| 187284 | 78-051 | LG 824 |
| 187291 | 85-032 | |
| 187292 | 82-026 | LG 872 |
| 187690 | 09-260 | LG 870 |
| 188606 | 72-162 | LG 1038 |
| 189028 | 195-067 | LG 380 |
| 189028 | 595-621* | LG 467 |
| 189028 | 95-621* | LG 402 |
| 189182 | 60-104 | LG 702 |
| 189403 | 76-039 | LG 1037 |
| 189993 | 78-014 | LG 825 |
| 191273 | 175-810 | LG 263 |
| 191273 | 75-810 | LG 257 |
| 191723 | 75-810 | LG 257 |
| 192682 | 595-602* | LG 403 |
| 192682 | 95-073 | LG 533 |
| 192682 | 95-602* | LG 403 |
| 192870 | 82-026 | LG 872 |
| 193144 | 72-001 | LG 1031 |
| 193144 | 72-458 | LG 1031 |
| 193214 | 75-892 | LG 255 |
| 193350 | 33-376 | LG 942 |
| 1935957 | 595-024* | LG 465 |
| 1935957 | 95-024 | LG 465 |
| 193707 | 65-002 | LG 340 |
| 193825 | 65-007 | LG 342 |
| 193957 | 195-003 | LG 400 |
| 193957 | 595-601* | LG 400 |
| 193957 | 95-601* | LG 423 |
| 194231x427 | 72-033 | LG 1031 |
| 194231X460 | 72-138 | LG 1032 |
| 194346 | 15-227 | LG 260 |
| 195945 | 78-062 | LG 835 |
| 196103 | 115-205 | LG 258 |
| 196103 | 175-893 | LG 263 |
| 196853 | 15-228 | LG 260 |
| 196857 | 15-020 | LG 291 |
| 197242 | 175-894 | LG 291 |
| 197242 | 75-894 | LG 263 |
| 197253 | 15-021 | LG 256 |
| 197253 | 175-895 | LG 263 |
| 197253 | 75-895 | LG 263 |
| 2008J | 33-331 | LG 730 |
| 2008J | 33-334 | LG 730 |
| 2008J | 33-335 | LG 730 |
| 2008J | 33-336 | LG 730 |
| 204114-884 | 95-044 | LG 465 |
| 204335256 | 195-021 | LG 468 |
| 204335256 | 595-602* | LG 403 |
| 204335256 | 95-602* | LG 403 |
| 204340218 | 95-044 | LG 465 |
| 21037 | 33-386 | LG 942 |
| 21261 | 33-334 | LG 730 |
| 21261 | 33-335 | LG 730 |
| 21261 | 33-336 | LG 730 |
| 2210R | 33-386 | LG 942 |
| 2295R | 75-179 | LG 310 |
| 2413J | 49-834 | LG 611 |
| 2421J | 49-810 | LG 612 |

X



* OREGON® Gator™ replacement blade

| OEM No. | OREGON | Page |
|---|---|---|
| **AYP** | | |
| 24285 | 33-335 | LG 730 |
| 24285 | 33-336 | LG 730 |
| 24541 | 595-605* | LG 422 |
| 24541 | 95-082 | LG 372 |
| 24541 | 95-605* | LG 463 |
| 24676 | 195-005 | LG 373 |
| 24676 | 596-900* | LG 380 |
| 24676 | 96-900* | LG 526 |
| 24692 | 195-003 | LG 400 |
| 24692 | 595-601* | LG 400 |
| 24692 | 95-601* | LG 423 |
| 25034 | 95-014 | LG 374 |
| 25034 | 95-607* | LG 397 |
| 25036 | 95-015 | LG 400 |
| 25322 | 95-011 | |
| 2683 | 33-393 | LG 943 |
| 2683R | 33-393 | LG 943 |
| 33256 | 195-021 | LG 468 |
| 33256 | 595-602* | LG 403 |
| 33256 | 95-602* | LG 403 |
| 3366R | 45-073 | LG 227 |
| 3367R | 33-334 | LG 730 |
| 3367R | 33-335 | LG 730 |
| 3367R | 33-336 | LG 730 |
| 33954 | 195-072 | LG 530 |
| 33954 | 595-605* | LG 422 |
| 33954 | 95-605* | LG 463 |
| 340218 | 95-044 | LG 465 |
| 3483 | 35-010 | LG 809 |
| 3541R | 75-168 | LG 310 |
| 3612R | 33-386 | LG 942 |
| 3621R | 33-386 | LG 942 |
| 365401R | 33-386 | LG 942 |
| 365402 | 33-386 | LG 942 |
| 3716R | 75-934 | LG 310 |
| 371979 | 07-102 | LG 774 |
| 372644 | 35-006 | LG 808 |
| 3L5402 | 33-386 | LG 942 |
| 401603 | 15-229 | LG 260 |
| 403107 | 596-370* | LG 427 |
| 403107 | 95-074 | LG 533 |
| 403107 | 96-370* | LG 533 |
| 405143 | 15-022 | LG 292 |
| 405380 | 195-070 | LG 469 |
| 405380 | 596-370* | LG 427 |
| 405380 | 96-370* | LG 533 |
| 406706 | 595-621* | LG 467 |
| 406706 | 95-057 | LG 380 |
| 406706 | 95-621* | LG 402 |
| 406707 | 595-602* | LG 403 |
| 406707 | 95-073 | LG 533 |
| 406707 | 95-602* | LG 403 |
| 406712 | 595-621* | LG 467 |
| 406712 | 95-057 | LG 380 |
| 406712 | 95-621* | LG 402 |
| 406713 | 595-602* | LG 403 |
| 406713 | 95-023 | LG 380 |
| 406713 | 95-602* | LG 403 |
| 407755x427 | 72-136 | LG 1032 |
| 407755x460 | 72-137 | LG 1032 |
| 407816 | 60-102 | LG 702 |
| 408007 | 115-220 | LG 264 |
| 408010 | 115-222 | LG 264 |
| 408010 | 15-230 | LG 260 |
| 408019 | 115-221 | LG 862 |
| 419271 | 15-231 | LG 260 |
| 419273 | 595-807* | LG 382 |
| 419273X431 | 595-807* | LG 382 |
| 419274 | 595-807* | LG 382 |
| 420097 | 65-008 | LG 340 |
| 420463 | 95-076 | LG 404 |
| 420463 | 95-615* | LG 426 |
| 42174 | 72-106 | LG 1029 |
| 421825 | 95-076 | LG 404 |
| 421825 | 95-615* | LG 426 |
| 422719 | 195-005 | LG 373 |
| 422719 | 596-900* | LG 380 |
| 422719 | 96-900* | LG 526 |
| 424752 | 195-005 | LG 373 |
| 424752 | 596-900* | LG 380 |
| 424752 | 96-900* | LG 526 |
| 428454 | 115-223 | LG 250 |
| 429636 | 15-023 | LG 256 |
| 429636 | 75-975 | LG 294 |
| 432133957 | 72-094 | LG 1042 |
| 437747 | 76-043 | LG 940 |
| 4406R | 33-386 | LG 942 |
| 440855 | 60-101 | LG 702 |
| 440LR | 33-386 | LG 942 |
| 44429 | 33-334 | LG 730 |
| 44429 | 33-335 | LG 730 |
| 44429 | 33-336 | LG 730 |
| 4445H1 | 71-800 | LG 956 |
| 4459J | 84-102 | LG 954 |
| 4460J | 84-103 | LG 954 |
| 4702H | 34-003 | LG 821 |
| 4827H | 34-030 | LG 821 |
| 4933H | 34-005 | LG 821 |
| 4933H | 34-006 | LG 821 |
| 506 90 96-01 | 33-019 | LG 948 |
| 5091H | 75-179 | LG 310 |
| 5091H | 75-208 | LG 277 |
| 511404 | 33-386 | LG 942 |
| 512258301 | 195-062 | LG 376 |
| 512258301 | 596-615* | LG 529 |
| 512258301 | 96-615* | LG 461 |
| 513897001 | 195-033 | LG 400 |
| 513897001 | 595-601* | LG 400 |
| 513897001 | 95-601* | LG 423 |
| 521981601 | 596-900* | LG 380 |
| 521981601 | 96-900* | LG 526 |
| 5276R | 83-300 | LG 819 |
| 53018 | 34-030 | LG 821 |
| 531005085 | 195-005 | LG 373 |
| 531005085 | 596-900* | LG 380 |
| 531005085 | 96-900* | LG 526 |
| 531007562 | 75-099 | LG 262 |
| 531300765 | 195-067 | LG 380 |
| 531300765 | 595-621* | LG 467 |
| 531300765 | 95-621* | LG 402 |
| 531301252 | 195-021 | LG 468 |
| 531301252 | 595-602* | LG 403 |
| 531301252 | 95-602* | LG 403 |
| 531307212 | 95-044 | LG 465 |
| 531307214 | 195-021 | LG 468 |
| 531307214 | 595-602* | LG 403 |
| 531307214 | 95-602* | LG 403 |
| 531307220 | 195-003 | LG 400 |
| 531307220 | 595-601* | LG 400 |
| 531307220 | 95-601* | LG 423 |
| 531307221 | 195-033 | LG 400 |
| 531307221 | 595-601* | LG 400 |
| 531307221 | 95-601* | LG 423 |
| 531307223 | 195-005 | LG 373 |
| 531307223 | 596-900* | LG 380 |
| 531307223 | 96-900* | LG 526 |
| 531307224 | 195-032 | LG 425 |
| 531307224 | 596-900* | LG 380 |
| 531307224 | 96-900* | LG 526 |
| 531307235 | 595-621* | LG 467 |
| 531307235 | 95-071 | LG 402 |
| 531307235 | 95-621* | LG 402 |
| 531307236 | 195-021 | LG 468 |
| 531307236 | 595-602* | LG 403 |
| 531307236 | 95-602* | LG 403 |
| 531307237 | 195-021 | LG 468 |
| 531307237 | 595-602* | LG 403 |
| 531307237 | 95-602* | LG 403 |
| 531309715 | 596-370* | LG 427 |
| 531309715 | 95-074 | LG 533 |
| 531309715 | 96-370* | LG 533 |
| 532 00 90-40 | 45-057 | LG 249 |
| 532 10 29-72 | 33-397 | LG 942 |
| 532 10 95-53 | 33-028 | LG 947 |
| 532 12 13-05 | 33-019 | LG 948 |
| 532 14 03-01 | 33-383 | LG 944 |
| 532 14 04-04 | 33-081 | LG 946 |
| 532 14 54-99 | 33-397 | LG 942 |
| 532 15 36-64 | 33-026 | LG 947 |
| 532 15 89-13 | 33-397 | LG 942 |
| 532 16 39-68 | 33-376 | LG 942 |
| 532 16 94-17 | 33-081 | LG 946 |
| 532 17 43-67 | 33-122-1 | LG 734 |
| 532 17 46-51 | 33-081 | LG 946 |
| 532 17 55-66 | 33-376 | LG 942 |
| 532 17 61-38 | 33-026 | LG 947 |
| 532009040 | 45-057 | LG 249 |
| 532025034 | 95-014 | LG 374 |
| 532025034 | 95-607* | LG 397 |
| 532059904 | 71-102 | LG 956 |
| 532065139 | 71-002 | LG 957 |
| 532069832 | 45-142 | LG 939 |
| 532104360 | 34-046 | LG 824 |
| 532106085 | 75-107 | LG 254 |
| 532106635 | 95-014 | LG 374 |
| 532106635 | 95-607* | LG 397 |
| 532106734 | 05-020 | LG 913 |
| 532108218 | 33-110 | LG 735 |
| 532108824 | 33-035 | LG 742 |
| 532109081 | 33-331 | LG 730 |
| 532109081 | 33-334 | LG 730 |
| 532109553 | 33-028 | LG 947 |
| 532109748 | 33-317-0 | LG 729 |
| 532109946 | 33-331 | LG 730 |
| 532110485 | 45-257 | LG 245 |
| 532110883 | 75-108 | LG 289 |
| 532110884 | 75-194 | LG 289 |
| 532114884 | 95-044 | LG 465 |
| 532120754 | 45-128 | LG 228 |
| 532121263 | 95-031 | LG 377 |
| 532121305 | 33-019 | LG 948 |
| 532121617 | 82-679 | LG 870 |
| 532121622 | 82-680 | LG 870 |
| 532121658 | 82-680 | LG 870 |
| 532121676 | 82-678 | LG 904 |
| 532121704 | 82-495 | LG 870 |
| 532121705 | 82-495 | LG 870 |
| 532122265 | 95-014 | LG 374 |
| 532122265 | 95-607* | LG 397 |
| 532123713X | 05-020 | LG 913 |
| 532124937 | 45-073 | LG 227 |
| 532124959 | 45-057 | LG 249 |
| 532124970 | 75-890 | LG 289 |
| 532125907 | 75-171 | LG 289 |
| 532126338 | 95-034 | LG 377 |
| 532126520 | 75-935 | LG 255 |
| 532126847 | 45-128 | LG 228 |
| 532127841 | 595-613* | LG 463 |
| 532127841 | 95-036 | LG 463 |
| 532127841 | 95-613* | LG 463 |
| 532127842 | 195-033 | LG 400 |
| 532127842 | 595-601* | LG 400 |
| 532127842 | 95-601* | LG 423 |
| 532128774 | 82-220 | LG 871 |
| 532129206 | 44-371 | LG 834 |
| 532129277 | 95-051 | LG 465 |
| 532129861 | 44-370 | LG 834 |
| 532130652 | 95-006 | LG 397 |
| 532130794 | 82-014 | LG 871 |
| 532130794 | 82-225 | LG 871 |
| 532130801 | 75-167 | LG 289 |
| 532130861 | 46-325 | LG 701 |
| 532130969 | 75-106 | LG 261 |
| 532131264 | 75-097 | LG 289 |
| 532131290 | 75-099 | LG 262 |
| 532131290 | 75-936 | LG 290 |
| 532131322 | 595-601* | LG 400 |
| 532131322 | 95-047 | LG 378 |
| 532131322 | 95-601* | LG 423 |
| 532131323 | 195-048 | LG 430 |
| 532131323 | 596-900* | LG 380 |
| 532131323 | 96-900* | LG 526 |
| 532131491 | 76-034 | |
| 532131494 | 34-046 | LG 824 |
| 532132801 | 75-889 | LG 252 |
| 532133035 | 75-890 | LG 289 |
| 532133107 | 60-105 | LG 702 |
| 532133346 | 95-051 | LG 465 |
| 532134148 | 195-003 | LG 400 |
| 532134148 | 595-601* | LG 400 |
| 532134148 | 95-601* | LG 423 |
| 532134149 | 195-005 | LG 373 |
| 532134149 | 596-900* | LG 380 |
| 532134149 | 96-900* | LG 526 |
| 532134768 | 195-021 | LG 468 |
| 532134768 | 595-602* | LG 403 |
| 532134768 | 95-602* | LG 403 |
| 532134871 | 95-051 | LG 465 |
| 532136572 | 44-302 | LG 841 |
| 532136818 | 82-680 | LG 870 |
| 532136874 | 76-040 | LG 941 |
| 532137078 | 75-164 | LG 262 |
| 532137140 | 33-110 | LG 735 |
| 532137152 | 82-221 | LG 872 |
| 532137153 | 75-195 | LG 254 |
| 532137380 | 595-609* | LG 461 |
| 532137380 | 95-018 | LG 399 |
| 532137380 | 95-609* | LG 376 |
| 532137553 | 85-023 | LG 907 |
| 532137646 | 85-017 | LG 907 |
| 532138255 | 75-167 | LG 289 |
| 532138406 | 33-331 | LG 730 |
| 532138496 | 595-613* | LG 463 |
| 532138496 | 95-036 | LG 463 |
| 532138496 | 95-613* | LG 463 |
| 532138497 | 195-033 | LG 400 |
| 532138497 | 595-601* | LG 400 |
| 532138497 | 95-601* | LG 423 |
| 532138498 | 195-032 | LG 425 |
| 532138498 | 596-900* | LG 380 |
| 532138498 | 96-900* | LG 526 |
| 532138970 | 195-033 | LG 400 |
| 532138970 | 595-601* | LG 400 |
| 532138970 | 95-601* | LG 423 |
| 532138971 | 195-032 | LG 425 |
| 532138971 | 596-900* | LG 380 |
| 532138971 | 96-900* | LG 526 |
| 532139245 | 34-049 | LG 824 |
| 532139573 | 75-169 | LG 290 |
| 532139774 | 195-003 | LG 400 |
| 532139774 | 595-601* | LG 400 |
| 532139774 | 95-601* | LG 423 |
| 532139775 | 195-019 | LG 466 |
| 532139775 | 596-900* | LG 380 |
| 532139775 | 96-900* | LG 526 |
| 532139868 | 76-015 | LG 804 |
| 532140126 | 72-458 | LG 1031 |
| 532140218 | 75-196 | LG 290 |
| 532140294 | 75-000 | LG 262 |
| 532140301 | 33-383 | LG 944 |
| 532140401 | 33-099 | LG 946 |
| 532141114 | 195-021 | LG 468 |
| 532141114 | 595-602* | LG 403 |
| 532141114 | 95-602* | LG 403 |
| 532141416 | 15-700 | LG 259 |
| 532142600 | 33-110 | LG 735 |
| 532143651 | 82-510 | LG 872 |
| 532-143651 | 82-510 | LG 872 |
| 532143669 | 95-034 | LG 377 |

X

* OREGON® Gator™ replacement blade

# 2019 OEM X-Reference

| OEM No. | OREGON | Page |
|---|---|---|
| **AYP** | | |
| 532143978 | 95-031 | LG 377 |
| 532144200 | 75-099 | LG 262 |
| 532144767 | 595-614* | LG 459 |
| 532144767 | 95-052 | LG 398 |
| 532144767 | 95-614* | LG 375 |
| 532144959 | 75-197 | LG 262 |
| 532145028 | 33-111 | LG 735 |
| 532145106 | 95-051 | LG 465 |
| 532145367 | 33-122-1 | LG 734 |
| 532145499 | 33-397 | LG 942 |
| 532145708 | 595-614* | LG 459 |
| 532145708 | 95-045 | LG 374 |
| 532145708 | 95-614* | LG 375 |
| 532146154 | 33-336 | LG 730 |
| 532146323 | 46-322 | LG 701 |
| 532146527 | 75-164 | LG 262 |
| 532148699 | 33-350 | LG 949 |
| 532148763 | 75-170 | LG 290 |
| 532150341 | 72-139 | LG 1032 |
| 532151140 | 45-146 | LG 804 |
| 532151141 | 45-145 | LG 804 |
| 532152202 | 195-021 | LG 468 |
| 532152202 | 595-602* | LG 403 |
| 532152202 | 95-602* | LG 403 |
| 532152443 | 595-614* | LG 459 |
| 532152443 | 95-045 | LG 374 |
| 532152443 | 95-614* | LG 375 |
| 532153532 | 44-371 | LG 834 |
| 532153535 | 44-370 | LG 834 |
| 532153664 | 33-026 | LG 947 |
| 532154959 | 33-081 | LG 946 |
| 532155099 | 45-144 | LG 941 |
| 532155106 | 45-144 | LG 941 |
| 532156546 | 76-041 | LG 940 |
| 532156581 | 60-108 | LG 703 |
| 532157033 | 595-614* | LG 459 |
| 532157033 | 95-052 | LG 398 |
| 532157033 | 95-614* | LG 375 |
| 532157353 | 595-614* | LG 459 |
| 532157353 | 95-052 | LG 398 |
| 532157353 | 95-614* | LG 375 |
| 532157769 | 75-164 | LG 262 |
| 532158913 | 33-397 | LG 942 |
| 532159267 | 595-621* | LG 467 |
| 532159267 | 95-071 | LG 402 |
| 532159267 | 95-621* | LG 402 |
| 532159705 | 595-614* | LG 459 |
| 532159705 | 95-052 | LG 398 |
| 532159705 | 95-614* | LG 375 |
| 532160395 | 76-042 | LG 939 |
| 532160793 | 42-555 | LG 803 |
| 532160889 | 33-112 | LG 735 |
| 532165631 | 15-705 | LG 315 |
| 532165632 | 75-897 | LG 262 |
| 532165746 | 72-312 | LG 1038 |
| 532165833 | 595-621* | LG 467 |
| 532165833 | 95-057 | LG 380 |
| 532165833 | 95-621* | LG 402 |
| 532166060 | 75-911 | LG 262 |
| 532168552 | 60-108 | LG 703 |
| 532169416 | 33-081 | LG 946 |
| 532169417 | 33-081 | LG 946 |
| 532169676 | 60-525 | LG 702 |
| 532170140 | 15-711 | LG 259 |
| 532170698 | 595-614* | LG 459 |
| 532170698 | 95-052 | LG 398 |
| 532170698 | 95-614* | LG 375 |
| 532173436 | 44-370 | LG 834 |
| 532173437 | 78-054 | LG 824 |
| 532173920 | 195-062 | LG 376 |
| 532173920 | 596-615* | LG 529 |
| 532173920 | 96-615* | LG 461 |
| 532173921 | 596-615* | LG 529 |
| 532173921 | 95-068 | LG 376 |
| 532173921 | 96-615* | LG 461 |
| 532174356 | 82-015 | |
| 532174358 | 82-015 | |
| 532174367 | 33-122-1 | LG 734 |
| 532174368 | 75-912 | LG 255 |
| 532174651 | 33-081 | LG 946 |
| 532174652 | 33-081 | LG 946 |
| 532174653 | 33-081 | LG 946 |
| 532174762 | 73-052 | LG 850 |
| 532174762 | 73-053 | LG 850 |
| 532174873 | 72-031 | LG 1038 |
| 532174883 | 75-913 | LG 291 |
| 532175064 | 595-621* | LG 467 |
| 532175064 | 95-057 | LG 380 |
| 532175064 | 95-621* | LG 402 |
| 532175067 | 60-525 | LG 702 |
| 532175121 | 45-143 | LG 939 |
| 532175436 | 75-914 | LG 291 |
| 532175566 | 33-376 | LG 942 |
| 532175689 | 76-031 | LG 804 |
| 532175820 | 78-052 | LG 824 |
| 532176066 | 72-313 | LG 1038 |
| 532176084 | 595-614* | LG 459 |
| 532176084 | 95-052 | LG 398 |
| 532176084 | 95-614* | LG 375 |
| 532176135 | 595-621* | LG 467 |
| 532176135 | 95-057 | LG 380 |
| 532176135 | 95-621* | LG 402 |
| 532176138 | 33-026 | LG 947 |
| 532176556 | 60-107 | LG 703 |
| 532177968 | 78-013 | LG 825 |
| 532178138 | 115-029 | LG 255 |
| 532178138 | 15-029 | LG 291 |
| 532178777 | 73-053 | LG 850 |
| 532179114 | 78-056 | LG 825 |
| 532179748 | 05-021 | LG 913 |
| 532180054 | 195-062 | LG 376 |
| 532180054 | 596-615* | LG 529 |
| 532180054 | 96-615* | LG 461 |
| 532180074 | 82-225 | LG 871 |
| 532180767 | 72-014 | LG 1031 |
| 532180773 | 72-076 | LG 1031 |
| 532180775 | 72-077 | LG 1031 |
| 532180808 | 75-654 | LG 263 |
| 532183567 | 60-109 | LG 703 |
| 532183724 | 81-013 | LG 802 |
| 532184058 | 78-014 | LG 825 |
| 532184093 | 73-052 | LG 850 |
| 532184094 | 73-053 | LG 850 |
| 532184588 | 60-103 | LG 702 |
| 532184590 | 65-002 | LG 340 |
| 532187254 | 195-072 | LG 530 |
| 532187254 | 595-605* | LG 422 |
| 532187254 | 95-605* | LG 463 |
| 532187255 | 595-605* | LG 422 |
| 532187255 | 95-082 | LG 372 |
| 532187255 | 95-605* | LG 463 |
| 532187256 | 195-072 | LG 530 |
| 532187256 | 595-605* | LG 422 |
| 532187256 | 95-605* | LG 463 |
| 532187283 | 75-810 | LG 257 |
| 532187284 | 78-051 | LG 824 |
| 532187291 | 85-032 | |
| 532187292 | 82-026 | LG 872 |
| 532187960 | 09-260 | LG 870 |
| 532189028 | 195-067 | LG 380 |
| 532189028 | 595-621* | LG 467 |
| 532189028 | 95-621* | LG 402 |
| 532189182 | 60-104 | LG 702 |
| 532189993 | 78-014 | LG 825 |
| 532191273 | 75-810 | LG 257 |
| 532191723 | 75-810 | LG 257 |
| 532192682 | 595-602* | LG 403 |
| 532192682 | 95-073 | LG 533 |
| 532192682 | 95-602* | LG 403 |
| 532192870 | 82-026 | LG 872 |
| 532193144 | 72-458 | LG 1031 |
| 532193214 | 75-892 | LG 255 |
| 532193707 | 65-002 | LG 340 |
| 532193957 | 195-003 | LG 400 |
| 532193957 | 595-601* | LG 400 |
| 532193957 | 95-601* | LG 423 |
| 53219478 | 75-898 | LG 262 |
| 532196103 | 115-205 | LG 258 |
| 532196103 | 175-893 | LG 263 |
| 532196103 | 75-893 | LG 263 |
| 532196857 | 15-020 | LG 291 |
| 532197242 | 75-894 | LG 263 |
| 532197253 | 15-021 | LG 256 |
| 532197253 | 75-895 | LG 263 |
| 532197257 | 60-526 | LG 702 |
| 53219946 | 33-334 | LG 730 |
| 532283281 | 60-110 | LG 703 |
| 532365402 | 33-386 | LG 942 |
| 532403107 | 596-370* | LG 427 |
| 532403107 | 95-074 | LG 533 |
| 532403107 | 96-370* | LG 533 |
| 532405143 | 15-022 | LG 292 |
| 532405380 | 195-070 | LG 469 |
| 532405380 | 596-370* | LG 427 |
| 532405380 | 96-370* | LG 533 |
| 532406707 | 595-602* | LG 403 |
| 532406707 | 95-073 | LG 533 |
| 532406707 | 95-602* | LG 403 |
| 532406712 | 595-621* | LG 467 |
| 532406712 | 95-057 | LG 380 |
| 532406712 | 95-621* | LG 402 |
| 532406713 | 595-602* | LG 403 |
| 532406713 | 95-023 | LG 380 |
| 532406713 | 95-602* | LG 403 |
| 532407816 | 60-102 | LG 702 |
| 532408007 | 115-220 | LG 264 |
| 532408010 | 115-222 | LG 264 |
| 532408019 | 115-221 | LG 862 |
| 532408714 | 60-526 | LG 702 |
| 532419273 | 595-807* | LG 382 |
| 532419274 | 595-807* | LG 382 |
| 532420097 | 65-008 | LG 340 |
| 532420463 | 95-076 | LG 404 |
| 532420463 | 95-615* | LG 426 |
| 532421825 | 95-076 | LG 404 |
| 532421825 | 95-615* | LG 426 |
| 532422719 | 195-005 | LG 373 |
| 532422719 | 596-900* | LG 380 |
| 532422719 | 96-900* | LG 526 |
| 532424752 | 195-005 | LG 373 |
| 532424752 | 596-900* | LG 380 |
| 532424752 | 96-900* | LG 526 |
| 532428454 | 115-223 | LG 250 |
| 532428460 | 60-101 | LG 702 |
| 532429636 | 15-023 | LG 256 |
| 532435111 | 60-526 | LG 702 |
| 532436122 | 73-052 | LG 850 |
| 532436125 | 73-053 | LG 850 |
| 532437601 | 95-076 | LG 404 |
| 532437601 | 95-615* | LG 426 |
| 532440855 | 60-101 | LG 702 |
| 532700417 | 60-004 | LG 701 |
| 532700972 | 95-051 | LG 465 |
| 532751646 | 95-051 | LG 465 |
| 532752233 | 95-044 | LG 465 |
| 532752234 | 195-021 | LG 468 |
| 532752234 | 595-602* | LG 403 |
| 532752234 | 95-602* | LG 403 |
| 532850972 | 595-024* | LG 465 |
| 532850972 | 95-024 | LG 465 |
| 532850973 | 595-602* | LG 403 |
| 532850973 | 95-023 | LG 380 |
| 532850973 | 95-602* | LG 403 |
| 532850977 | 65-006 | LG 340 |
| 532851462 | 60-000 | LG 702 |
| 532851514 | 65-007 | LG 342 |
| 535126520 | 75-935 | LG 255 |
| 5375 | 78-043 | LG 824 |
| 539 10 10-80 | 33-028 | LG 947 |
| 539 10 17-68 | 33-081 | LG 946 |
| 539 92 34-08 | 33-027 | LG 947 |
| 539101080 | 33-028 | LG 947 |
| 539107519 | 195-062 | LG 376 |
| 539107519 | 596-615* | LG 529 |
| 539107519 | 96-615* | LG 461 |
| 539107610 | 72-094 | LG 1042 |
| 539110324 | 195-003 | LG 400 |
| 539110324 | 595-601* | LG 400 |
| 539110324 | 95-601* | LG 423 |
| 539110411 | 15-472 | LG 259 |
| 539110460 | 195-005 | LG 373 |
| 539110460 | 596-900* | LG 380 |
| 539110460 | 96-900* | LG 526 |
| 539110832 | 15-473 | LG 288 |
| 539111878 | 195-067 | LG 380 |
| 539111878 | 595-621* | LG 467 |
| 539111878 | 95-621* | LG 402 |
| 539112053 | 195-072 | LG 530 |
| 539112053 | 595-605* | LG 422 |
| 539112053 | 95-605* | LG 463 |
| 539112529 | 15-474 | LG 288 |
| 539174651 | 33-081 | LG 946 |
| 539174652 | 33-081 | LG 946 |
| 544080204 | 595-024* | LG 465 |
| 544080204 | 95-024 | LG 465 |
| 545140301 | 33-383 | LG 944 |
| 55139204 | 595-024* | LG 465 |
| 55139204 | 95-024 | LG 465 |
| 55941 | 75-168 | LG 310 |
| 56823 | 75-179 | LG 310 |
| 574 45 54-01 | 33-383 | LG 944 |
| 574292401 | 195-072 | LG 530 |
| 574292401 | 595-605* | LG 422 |
| 574292401 | 95-605* | LG 463 |
| 575157101 | 195-021 | LG 468 |
| 575157101 | 595-602* | LG 403 |
| 575157101 | 95-602* | LG 403 |
| 575164601 | 95-051 | LG 465 |
| 575937901 | 195-070 | LG 469 |
| 575937901 | 596-370* | LG 427 |
| 575937901 | 96-370* | LG 533 |
| 575938201 | 195-062 | LG 376 |
| 575938201 | 596-615* | LG 529 |
| 575938201 | 96-615* | LG 461 |
| 575938301 | 195-062 | LG 376 |
| 575938301 | 596-615* | LG 529 |
| 575938301 | 96-615* | LG 461 |
| 575938401 | 195-072 | LG 530 |
| 575938401 | 595-605* | LG 422 |
| 575938401 | 95-605* | LG 463 |
| 575938501 | 595-605* | LG 422 |
| 575938501 | 95-082 | LG 372 |
| 575938501 | 95-605* | LG 463 |
| 577203109 | 45-057 | LG 249 |
| 577203119 | 45-257 | LG 245 |
| 5797H | 33-386 | LG 942 |
| 580244001 | 95-615* | LG 426 |
| 580258101 | 595-621* | LG 467 |
| 580258101 | 95-621* | LG 402 |
| 580258102 | 595-621* | LG 467 |
| 580258102 | 95-621* | LG 402 |
| 582931401 | 595-602* | LG 403 |
| 582931401 | 95-073 | LG 533 |
| 582931401 | 95-602* | LG 403 |
| 583068901 | 33-376 | LG 942 |
| 585587701 | 95-615* | LG 426 |
| 5920H | 45-057 | LG 249 |
| 59311 | 75-321 | LG 334 |
| 59904 | 71-102 | LG 956 |

X



* OREGON® Gator™ replacement blade

## AYP

| OEM No. | OREGON | Page |
|---|---|---|
| 6109J | 34-011 | LG 821 |
| 625J | 45-079 | LG 249 |
| 62828 | 15-715 | LG 315 |
| 63688 | 81-012 | LG 802 |
| 6474H | 75-208 | LG 277 |
| 64906 | 45-087 | LG 243 |
| 65139 | 71-002 | LG 957 |
| 6554J | 84-102 | LG 954 |
| 6555J | 84-103 | LG 954 |
| 66465 | 71-500 | |
| 66507 | 45-079 | LG 249 |
| 6774H | 75-208 | LG 277 |
| 677A880 | 33-331 | LG 730 |
| 677A880 | 33-334 | LG 730 |
| 677A880 | 33-335 | LG 730 |
| 677A880 | 33-336 | LG 730 |
| 69229 | 595-024* | LG 465 |
| 69229 | 95-024 | LG 465 |
| 6944R | 75-168 | LG 310 |
| 700417 | 60-004 | LG 701 |
| 700953 | 72-458 | LG 1031 |
| 700973 | 195-021 | LG 468 |
| 700973 | 595-602* | LG 403 |
| 700973 | 95-602* | LG 403 |
| 701211 | 595-024* | LG 465 |
| 701211 | 95-024 | LG 465 |
| 701213 | 595-602* | LG 403 |
| 701213 | 95-023 | LG 380 |
| 701213 | 95-602* | LG 403 |
| 701575 | 72-003 | LG 1031 |
| 701575 | 72-458 | LG 1031 |
| 702245 | 72-456 | LG 1036 |
| 7133203 | 595-024* | LG 465 |
| 7133203 | 95-024 | LG 465 |
| 7133219 | 595-602* | LG 403 |
| 7133219 | 95-023 | LG 380 |
| 7133219 | 95-602* | LG 403 |
| 7133269 | 195-021 | LG 468 |
| 7133269 | 595-602* | LG 403 |
| 7133269 | 95-602* | LG 403 |
| 7151J | 71-277 | LG 956 |
| 7152J | 71-104 | LG 956 |
| 7154J | 71-105 | LG 957 |
| 71577 | 33-386 | LG 942 |
| 72215 | 78-043 | LG 824 |
| 72841 | 33-386 | LG 942 |
| 7486H | 33-386 | LG 942 |
| 74977 | 15-716 | LG 315 |
| 74R | 33-386 | LG 942 |
| 750124 | 72-458 | LG 1031 |
| 750851 | 72-458 | LG 1031 |
| 751646 | 95-051 | LG 465 |
| 752233 | 95-044 | LG 465 |
| 752234 | 195-021 | LG 468 |
| 752234 | 595-602* | LG 403 |
| 752234 | 95-602* | LG 403 |
| 75672 | 34-031 | LG 821 |
| 75673 | 34-002 | LG 821 |
| 77193957 | 595-024* | LG 465 |
| 77193957 | 95-024 | LG 465 |
| 7754R | 33-331 | LG 730 |
| 7754R | 33-334 | LG 730 |
| 7754R | 33-335 | LG 730 |
| 7754R | 33-336 | LG 730 |
| 777134149 | 195-005 | LG 373 |
| 777134149 | 596-900* | LG 380 |
| 777134149 | 96-900* | LG 526 |
| 777187256 | 195-072 | LG 530 |
| 777187256 | 595-605* | LG 422 |
| 777187256 | 95-605* | LG 463 |
| 777193957 | 195-003 | LG 400 |
| 777193957 | 595-601* | LG 400 |
| 777193957 | 95-601* | LG 423 |
| 777405380 | 195-070 | LG 469 |
| 777405380 | 596-370* | LG 427 |
| 777405380 | 96-370* | LG 533 |
| 777419274 | 595-807* | LG 382 |
| 7838R | 45-109 | LG 939 |
| 78777 | 73-053 | LG 850 |
| 801156 | 72-458 | LG 1031 |
| 81200029 | 02-020 | |
| 83059 | 49-170 | LG 758 |
| 83079 | 55-820 | LG 935 |
| 850053 | 15-717 | LG 260 |
| 850690 | 72-458 | LG 1031 |
| 850972 | 595-024* | LG 465 |
| 850972 | 95-024 | LG 465 |
| 8509725 | 595-024* | LG 465 |
| 8509725 | 95-024 | LG 465 |
| 850973 | 595-602* | LG 403 |
| 850973 | 95-023 | LG 380 |
| 850973 | 95-602* | LG 403 |
| 850977 | 65-006 | LG 340 |
| 850986 | 72-456 | LG 1036 |
| 851462 | 60-000 | LG 702 |
| 851514 | 65-007 | LG 342 |
| 88074 | 15-718 | LG 259 |
| 88558 | 72-458 | LG 1031 |
| 9040 | 45-057 | LG 249 |
| 9040H | 45-043 | LG 243 |
| 9040H | 45-057 | LG 249 |
| 9040HR | 45-057 | LG 249 |
| 913532193957 | 595-024* | LG 465 |
| 913532193957 | 95-024 | LG 465 |
| 917109946X | 33-334 | LG 730 |
| 917110485XCS | 45-257 | LG 245 |
| 917110485XMS | 45-257 | LG 245 |
| 917121263X | 95-031 | LG 377 |
| 917121263XMS | 95-031 | LG 377 |
| 917122265X | 95-014 | LG 374 |
| 917122265X | 95-607* | LG 397 |
| 917126338X | 95-034 | LG 377 |
| 917127842 | 195-033 | LG 400 |
| 917127842 | 595-601* | LG 400 |
| 917127842 | 95-601* | LG 423 |
| 917127843 | 195-032 | LG 425 |
| 917127843 | 596-900* | LG 380 |
| 917127843 | 96-900* | LG 526 |
| 917129277 | 95-051 | LG 465 |
| 917130652MS | 95-006 | LG 397 |
| 917131322 | 595-601* | LG 400 |
| 917131322 | 95-047 | LG 378 |
| 917131322 | 95-601* | LG 423 |
| 917131323 | 195-032 | LG 425 |
| 917131323 | 596-900* | LG 380 |
| 917131323 | 96-900* | LG 526 |
| 917131694 | 95-051 | LG 465 |
| 917134148MS | 195-003 | LG 400 |
| 917134148MS | 595-601* | LG 400 |
| 917134148MS | 95-601* | LG 423 |
| 917134148X | 195-003 | LG 400 |
| 917134148X | 595-601* | LG 400 |
| 917134148X | 95-601* | LG 423 |
| 917137380MS | 595-609* | LG 461 |
| 917137380MS | 95-018 | LG 399 |
| 917137380MS | 95-609* | LG 376 |
| 917137380P | 595-609* | LG 461 |
| 917137380P | 95-018 | LG 399 |
| 917137380P | 95-609* | LG 376 |
| 917138497MS | 195-033 | LG 400 |
| 917138497MS | 595-601* | LG 400 |
| 917138497MS | 95-601* | LG 423 |
| 917138498MS | 195-032 | LG 425 |
| 917138498MS | 596-900* | LG 380 |
| 917138498MS | 96-900* | LG 526 |
| 917138970 | 195-033 | LG 400 |
| 917138970 | 595-601* | LG 400 |
| 917138970 | 95-601* | LG 423 |
| 917139774 | 195-003 | LG 400 |
| 917139774 | 595-601* | LG 400 |
| 917139774 | 95-601* | LG 423 |
| 917139774MS | 195-003 | LG 400 |
| 917139774MS | 595-601* | LG 400 |
| 917139774MS | 95-601* | LG 423 |
| 917139775P | 195-019 | LG 466 |
| 917139775P | 596-900* | LG 380 |
| 917139775P | 96-900* | LG 526 |
| 917144767 | 595-614* | LG 459 |
| 917144767 | 95-052 | LG 398 |
| 917144767 | 95-614* | LG 375 |
| 917145106CS | 595-024* | LG 465 |
| 917145106CS | 95-024 | LG 465 |
| 917145106CS | 95-051 | LG 465 |
| 917145499 | 33-397 | LG 942 |
| 917145499CS | 33-397 | LG 942 |
| 917145499MS | 33-397 | LG 942 |
| 917145708 | 595-614* | LG 459 |
| 917145708 | 95-045 | LG 374 |
| 917145708 | 95-614* | LG 375 |
| 917145708CS | 595-614* | LG 459 |
| 917145708CS | 95-045 | LG 374 |
| 917145708CS | 95-614* | LG 375 |
| 917145708MS | 595-614* | LG 459 |
| 917145708MS | 95-045 | LG 374 |
| 917145708MS | 95-614* | LG 375 |
| 917146283 | 33-081 | LG 946 |
| 917152443P | 595-614* | LG 459 |
| 917152443P | 95-045 | LG 374 |
| 917152443P | 95-614* | LG 375 |
| 917153664 | 33-026 | LG 947 |
| 917154959 | 33-081 | LG 946 |
| 917154963 | 33-081 | LG 946 |
| 917157033 | 595-614* | LG 459 |
| 917157033 | 95-052 | LG 398 |
| 917157033 | 95-614* | LG 375 |
| 917157101 | 195-021 | LG 468 |
| 917157101 | 595-602* | LG 403 |
| 917157101 | 95-602* | LG 403 |
| 917163819 | 595-614* | LG 459 |
| 917163819 | 95-045 | LG 374 |
| 917163819 | 95-614* | LG 375 |
| 917169416 | 33-081 | LG 946 |
| 917169417 | 33-081 | LG 946 |
| 917170698 | 595-614* | LG 459 |
| 917170698 | 95-052 | LG 398 |
| 917170698 | 95-614* | LG 375 |
| 917173920 | 195-062 | LG 376 |
| 917173920 | 596-615* | LG 529 |
| 917173920 | 96-615* | LG 461 |
| 917174652 | 33-081 | LG 946 |
| 917174653 | 33-081 | LG 946 |
| 917175064 | 595-621* | LG 467 |
| 917175064 | 95-057 | LG 380 |
| 917175064 | 95-621* | LG 402 |
| 917175064PB | 595-621* | LG 467 |
| 917175064PB | 95-057 | LG 380 |
| 917175064PB | 95-621* | LG 402 |
| 917176135 | 595-621* | LG 467 |
| 917176135 | 95-057 | LG 380 |
| 917176135 | 95-621* | LG 402 |
| 917178777X431 | 73-053 | LG 850 |
| 917187254 | 195-072 | LG 530 |
| 917187254 | 595-605* | LG 422 |
| 917187254 | 95-605* | LG 463 |
| 917192682 | 595-602* | LG 403 |
| 917192682 | 95-073 | LG 533 |
| 917192682 | 95-602* | LG 403 |
| 917192682X431 | 595-602* | LG 403 |
| 917192682X431 | 95-073 | LG 533 |
| 917192682X431 | 95-602* | LG 403 |
| 91724676 | 195-005 | LG 373 |
| 91724676 | 596-900* | LG 380 |
| 91724676 | 96-900* | LG 526 |
| 91724691 | 95-015 | LG 400 |
| 91733219 | 595-602* | LG 403 |
| 91733219 | 95-023 | LG 380 |
| 91733219 | 95-602* | LG 403 |
| 91733256 | 195-021 | LG 468 |
| 91733256 | 595-602* | LG 403 |
| 91733256 | 95-602* | LG 403 |
| 91733269 | 195-021 | LG 468 |
| 91733269 | 595-602* | LG 403 |
| 91733269 | 95-602* | LG 403 |
| 917436700 | 33-122-1 | LG 734 |
| 917436702 | 33-122-1 | LG 734 |
| 917436734 | 33-122-1 | LG 734 |
| 917532062828 | 15-715 | LG 315 |
| 917532109553 | 33-028 | LG 947 |
| 917532121263 | 95-031 | LG 377 |
| 917532127841 | 595-613* | LG 463 |
| 917532127841 | 95-036 | LG 463 |
| 917532127841 | 95-613* | LG 463 |
| 917532129277 | 95-051 | LG 465 |
| 917532130652 | 95-006 | LG 397 |
| 917532134148 | 195-003 | LG 400 |
| 917532134148 | 595-601* | LG 400 |
| 917532134148 | 95-601* | LG 423 |
| 917532134768 | 195-021 | LG 468 |
| 917532134768 | 595-602* | LG 403 |
| 917532134768 | 95-602* | LG 403 |
| 917532137380 | 595-609* | LG 461 |
| 917532137380 | 95-018 | LG 399 |
| 917532137380 | 95-609* | LG 376 |
| 917532138496 | 595-613* | LG 463 |
| 917532138496 | 95-036 | LG 463 |
| 917532138496 | 95-613* | LG 463 |
| 917532138497 | 195-033 | LG 400 |
| 917532138497 | 595-601* | LG 400 |
| 917532138497 | 95-601* | LG 423 |
| 917532138498 | 195-032 | LG 425 |
| 917532138498 | 596-900* | LG 380 |
| 917532138498 | 96-900* | LG 526 |
| 917532138970 | 195-033 | LG 400 |
| 917532138970 | 595-601* | LG 400 |
| 917532138970 | 95-601* | LG 423 |
| 917532139774 | 195-003 | LG 400 |
| 917532139774 | 595-601* | LG 400 |
| 917532139774 | 95-601* | LG 423 |
| 917532139775 | 195-019 | LG 466 |
| 917532139775 | 596-900* | LG 380 |
| 917532139775 | 96-900* | LG 526 |
| 917532140301 | 33-383 | LG 944 |
| 917532141114 | 195-021 | LG 468 |
| 917532141114 | 595-602* | LG 403 |
| 917532141114 | 95-602* | LG 403 |
| 917532141416 | 15-700 | LG 259 |
| 917532142600 | 33-110 | LG 735 |
| 917532144767 | 595-614* | LG 459 |
| 917532144767 | 95-052 | LG 398 |
| 917532144767 | 95-614* | LG 375 |
| 917532145028 | 33-111 | LG 735 |
| 917532145499 | 33-397 | LG 942 |
| 917532145708 | 595-614* | LG 459 |
| 917532145708 | 95-045 | LG 374 |
| 917532145708 | 95-614* | LG 375 |
| 917532152443 | 595-614* | LG 459 |
| 917532152443 | 95-045 | LG 374 |
| 917532152443 | 95-614* | LG 375 |
| 917532153664 | 33-026 | LG 947 |
| 917532154959 | 33-081 | LG 946 |
| 917532157353 | 595-614* | LG 459 |
| 917532157353 | 95-052 | LG 398 |
| 917532157353 | 95-614* | LG 375 |
| 917532159267 | 595-621* | LG 467 |
| 917532159267 | 95-071 | LG 402 |
| 917532159267 | 95-621* | LG 402 |
| 917532160889 | 33-112 | LG 735 |
| 917532165631 | 15-705 | LG 315 |
| 917532165833 | 595-621* | LG 467 |

X

# 2019 OEM X-Reference

| OEM No. | OREGON | Page |
|---|---|---|
| **AYP** | | |
| 917532165833 | 95-057 | LG 380 |
| 917532165833 | 95-621* | LG 402 |
| 917532169416 | 33-081 | LG 946 |
| 917532170140 | 15-711 | LG 259 |
| 917532170698 | 595-614* | LG 459 |
| 917532170698 | 95-052 | LG 398 |
| 917532170698 | 95-614* | LG 375 |
| 917532173920 | 195-062 | LG 376 |
| 917532173920 | 596-615* | LG 529 |
| 917532173920 | 96-615* | LG 461 |
| 917532173921 | 596-615* | LG 529 |
| 917532173921 | 95-068 | LG 376 |
| 917532173921 | 96-615* | LG 461 |
| 917532174367 | 33-122-1 | LG 734 |
| 917532174651 | 33-081 | LG 946 |
| 917532174653 | 33-081 | LG 946 |
| 917532174762 | 73-052 | LG 850 |
| 917532175064 | 595-621* | LG 467 |
| 917532175064 | 95-057 | LG 380 |
| 917532175064 | 95-621* | LG 402 |
| 917532175566 | 33-376 | LG 942 |
| 917532176084 | 595-614* | LG 459 |
| 917532176084 | 95-052 | LG 398 |
| 917532176084 | 95-614* | LG 375 |
| 917532176135 | 595-621* | LG 467 |
| 917532176135 | 95-057 | LG 380 |
| 917532176135 | 95-621* | LG 402 |
| 917532176138 | 33-026 | LG 947 |
| 917532180054 | 195-062 | LG 376 |
| 917532180054 | 596-615* | LG 529 |
| 917532180054 | 96-615* | LG 461 |
| 917532187254 | 195-072 | LG 530 |
| 917532187254 | 595-605* | LG 422 |
| 917532187254 | 95-605* | LG 463 |
| 917532187255 | 595-605* | LG 422 |
| 917532187255 | 95-082 | LG 372 |
| 917532187255 | 95-605* | LG 463 |
| 917532187256 | 195-072 | LG 530 |
| 917532187256 | 595-605* | LG 422 |
| 917532187256 | 95-605* | LG 463 |
| 917532192682 | 595-602* | LG 403 |
| 917532192682 | 95-073 | LG 533 |
| 917532192682 | 95-602* | LG 403 |
| 917532193957 | 195-003 | LG 400 |
| 917532193957 | 595-601* | LG 400 |
| 917532193957 | 95-601* | LG 423 |
| 917532403107 | 596-370* | LG 427 |
| 917532403107 | 95-074 | LG 533 |
| 917532403107 | 96-370* | LG 533 |
| 917532405380 | 195-070 | LG 469 |
| 917532405380 | 596-370* | LG 427 |
| 917532405380 | 96-370* | LG 533 |
| 917532406707 | 595-602* | LG 403 |
| 917532406707 | 95-073 | LG 533 |
| 917532406707 | 95-602* | LG 403 |
| 917532406713 | 595-602* | LG 403 |
| 917532406713 | 95-023 | LG 380 |
| 917532406713 | 95-602* | LG 403 |
| 917532419273 | 595-807* | LG 382 |
| 917532420463 | 95-076 | LG 404 |
| 917532420463 | 95-615* | LG 426 |
| 917532421825 | 95-076 | LG 404 |
| 917532421825 | 95-615* | LG 426 |
| 917532422719 | 195-005 | LG 373 |
| 917532422719 | 596-900* | LG 380 |
| 917532422719 | 96-900* | LG 526 |
| 917532424752 | 195-005 | LG 373 |
| 917532424752 | 596-900* | LG 380 |
| 917532424752 | 96-900* | LG 526 |
| 917532751646 | 95-051 | LG 465 |
| 917532752233 | 95-044 | LG 465 |
| 917532752234 | 195-021 | LG 468 |
| 917532752234 | 595-602* | LG 403 |
| 917532752234 | 95-602* | LG 403 |
| 917532850972 | 595-024* | LG 465 |
| 917532850972 | 95-024 | LG 465 |
| 917532850972MS | 595-024* | LG 465 |
| 917532850972MS | 95-024 | LG 465 |
| 917532850973 | 595-602* | LG 403 |
| 917532850973 | 95-023 | LG 380 |
| 917532850973 | 95-602* | LG 403 |
| 917539101080 | 33-028 | LG 947 |
| 917539107519 | 195-062 | LG 376 |
| 917539107519 | 596-615* | LG 529 |
| 917539107519 | 96-615* | LG 461 |
| 917539110460 | 195-005 | LG 373 |
| 917539110460 | 596-900* | LG 380 |
| 917539110460 | 96-900* | LG 526 |
| 917539110832 | 15-473 | LG 288 |
| 917539112053 | 195-072 | LG 530 |
| 917539112053 | 595-605* | LG 422 |
| 917539112053 | 95-605* | LG 463 |
| 91756400 | 595-024* | LG 465 |
| 91756400 | 95-024 | LG 465 |
| 91756401 | 595-602* | LG 403 |
| 91756401 | 95-023 | LG 380 |
| 91756401 | 95-602* | LG 403 |
| 917577203106 | 195-062 | LG 376 |
| 917577203106 | 596-615* | LG 529 |
| 917577203106 | 96-615* | LG 461 |
| 917577203109 | 45-057 | LG 249 |
| 917577203119 | 45-257 | LG 245 |
| 917700972 | 95-051 | LG 465 |
| 917700973 | 195-021 | LG 468 |
| 917700973 | 595-602* | LG 403 |
| 917700973 | 95-602* | LG 403 |
| 917701211MS | 595-024* | LG 465 |
| 917701211MS | 95-024 | LG 465 |
| 917701211X417 | 595-024* | LG 465 |
| 917701211X417 | 95-024 | LG 465 |
| 917701213 | 595-602* | LG 403 |
| 917701213 | 95-023 | LG 380 |
| 917701213 | 95-602* | LG 403 |
| 917701213MS | 595-602* | LG 403 |
| 917701213MS | 95-023 | LG 380 |
| 917701213MS | 95-602* | LG 403 |
| 917733203 | 595-024* | LG 465 |
| 917733203 | 95-024 | LG 465 |
| 917751646 | 95-051 | LG 465 |
| 917752234 | 195-021 | LG 468 |
| 917752234 | 595-602* | LG 403 |
| 917752234 | 95-602* | LG 403 |
| 91777419274 | 595-807* | LG 382 |
| 917777134149 | 195-005 | LG 373 |
| 917777134149 | 596-900* | LG 380 |
| 917777134149 | 96-900* | LG 526 |
| 917777187256 | 195-072 | LG 530 |
| 917777187256 | 595-605* | LG 422 |
| 917777187256 | 95-605* | LG 463 |
| 917777405380 | 195-070 | LG 469 |
| 917777405380 | 596-370* | LG 427 |
| 917777405380 | 96-370* | LG 533 |
| 9178 | 34-002 | LG 821 |
| 917850972 | 595-024* | LG 465 |
| 917850972 | 95-024 | LG 465 |
| 917850973 | 595-602* | LG 403 |
| 917850973 | 95-023 | LG 380 |
| 917850973 | 95-602* | LG 403 |
| 917850973MS | 595-602* | LG 403 |
| 917850973MS | 95-023 | LG 380 |
| 917850973MS | 95-602* | LG 403 |
| 9179497R | 95-011 | |
| 9180R | 15-719 | LG 312 |
| 918131494 | 34-046 | LG 824 |
| 918152443 | 595-614* | LG 459 |
| 918152443 | 95-045 | LG 374 |
| 918152443 | 95-614* | LG 375 |
| 918153532 | 44-371 | LG 834 |
| 9292H | 34-017 | LG 821 |
| 9497R | 95-011 | |
| 9541H | 33-386 | LG 942 |
| 954633774 | 195-062 | LG 376 |
| 954633774 | 596-615* | LG 529 |
| 954633774 | 96-615* | LG 461 |
| 954633781 | 596-615* | LG 529 |
| 954633781 | 95-068 | LG 376 |
| 954633781 | 96-615* | LG 461 |
| 954636867 | 195-005 | LG 373 |
| 954636867 | 596-900* | LG 380 |
| 954636867 | 96-900* | LG 526 |
| 9581505F | 44-371 | LG 834 |
| 9585464 | 34-046 | LG 824 |
| 980STD365402R | 33-386 | LG 942 |
| CH11 | 67-005 | LG 965 |
| CH12 | 67-005 | LG 965 |
| CH208 | 67-017 | LG 965 |
| CH208A | 67-017 | LG 965 |
| CH239 | 67-015 | LG 965 |
| LA018 | 67-018 | LG 965 |
| LA018AR | 67-018 | LG 965 |
| LA028 | 67-014 | LG 965 |
| LC06 | 67-002 | LG 965 |
| P121687X | 82-678 | LG 904 |
| STD365402 | 33-386 | LG 942 |
| STD365402R | 33-386 | LG 942 |
| TA128 | 67-015 | LG 965 |
| **BAD BOY** | | |
| 022-5234-98 | 72-311-1 | LG 1039 |
| 041021900 | 15-232 | LG 266 |
| 041-0219-00 | 15-232 | LG 266 |
| 041023600 | 15-233 | LG 266 |
| 041-0236-00 | 15-233 | LG 266 |
| 041025400 | 15-240 | LG 267 |
| 041142000 | 15-234 | LG 267 |
| 041-1420-00 | 15-234 | LG 267 |
| 041-1420-00DC | 15-234 | LG 267 |
| 041147000 | 15-235 | LG 267 |
| 041-1470-00 | 15-235 | LG 267 |
| 041149000 | 15-236 | LG 267 |
| 041-1490-00 | 15-236 | LG 267 |
| 041-1560-00 | 15-237 | LG 267 |
| 041-1650-00 | 115-201 | LG 266 |
| 041189000 | 15-238 | LG 267 |
| 041-1890-00 | 15-238 | LG 267 |
| 041237500 | 15-239 | LG 267 |
| 041-2375-00 | 15-239 | LG 267 |
| 041252500 | 15-240 | LG 267 |
| 041-2525-00 | 15-240 | LG 267 |
| 041504800 | 15-241 | LG 267 |
| 041-5048-00 | 15-241 | LG 267 |
| 041520000 | 15-242 | LG 267 |
| 041-5200-00 | 15-242 | LG 267 |
| 041560000 | 15-237 | LG 267 |
| 041-6027 | 15-243 | LG 267 |
| 041-6027-00 | 15-243 | LG 267 |
| 041-6027-0DF | 15-243 | LG 267 |
| 041640000 | 15-244 | LG 267 |
| 041-6400-00 | 15-244 | LG 267 |
| 063-2004-00 | 69-281 | LG 814 |
| 063-2010-00 | 83-503 | LG 818 |
| 063-5400-00 | 83-284 | LG 818 |
| 063-8019-00 | 30-845 | LG 208 |
| 41021900 | 15-232 | LG 266 |
| 41-0219-00 | 15-232 | LG 266 |
| 41023600 | 15-233 | LG 266 |
| 41-0236-00 | 15-233 | LG 266 |
| 41025400 | 15-240 | LG 267 |
| 41-0254-00 | 15-240 | LG 267 |
| 41142000 | 15-234 | LG 267 |
| 41-1420-00 | 15-234 | LG 267 |
| 41147000 | 15-235 | LG 267 |
| 41-1470-00 | 15-235 | LG 267 |
| 41149000 | 15-236 | LG 267 |
| 41-1490-00 | 15-236 | LG 267 |
| 41156000 | 15-237 | LG 267 |
| 41-1560-00 | 15-237 | LG 267 |
| 41189000 | 15-238 | LG 267 |
| 41-1890-00 | 15-238 | LG 267 |
| 41237500 | 15-239 | LG 267 |
| 41-2375-00 | 15-239 | LG 267 |
| 41252500 | 15-240 | LG 267 |
| 41504800 | 15-241 | LG 267 |
| 41520000 | 15-242 | LG 267 |
| 41602700 | 15-243 | LG 267 |
| 41640000 | 15-244 | LG 267 |
| **BEFCO** | | |
| 000-6641 | 392-301* | LG 382 |
| 000-6641 | 92-301 | LG 382 |
| 000-6690 | 392-302* | LG 382 |
| 000-6690 | 92-302 | LG 382 |
| 000-6795 | 392-300* | LG 382 |
| 000-6795 | 92-300 | LG 382 |
| 000-6845 | 392-133* | LG 382 |
| 000-6845 | 92-133 | LG 382 |
| **BELKNAP INC.** | | |
| 754-0145 | 75-145 | LG 300 |
| 754-0151 | 75-004 | LG 301 |
| 754-0178 | 75-179 | LG 310 |
| 754-0201 | 75-441 | LG 334 |
| 754-0234 | 75-441 | LG 334 |
| 754-0240 | 75-009 | LG 301 |
| 754-0241 | 75-012 | LG 301 |
| 754-0266 | 75-016 | LG 301 |
| 954-0145 | 75-145 | LG 300 |
| 954-0145A | 75-145 | LG 300 |
| 954-0151 | 75-004 | LG 301 |
| 954-015A | 75-145 | LG 300 |
| 954-0178 | 75-179 | LG 310 |
| 954-0201 | 75-441 | LG 334 |
| 954-0234 | 75-441 | LG 334 |
| 954-0240 | 75-009 | LG 301 |
| 954-0241 | 75-012 | LG 301 |
| 954-0241A | 75-012 | LG 301 |
| 954-0266 | 75-016 | LG 301 |
| 954-0266A | 75-016 | LG 301 |
| **BENNY'S** | | |
| 754-0935 | 75-092 | LG 304 |
| 954-0935 | 75-092 | LG 304 |
| **BIG BEE** | | |
| A-19B20 | 91-046 | LG 384 |
| A-19B25 | 91-047 | LG 384 |
| FM04-2A | 91-046 | LG 384 |
| FM04-3A | 91-047 | LG 384 |
| **BILLY GOAT** | | |
| 350205 | 40-707 | LG 590 |
| **BLACK + DECKER** | | |
| 82-024 | 40-121 | LG 584 |
| **BLUE GRASS** | | |
| 754-0145 | 75-145 | LG 300 |
| 754-0151 | 75-004 | LG 301 |
| 754-0178 | 75-179 | LG 310 |
| 754-0201 | 75-441 | LG 334 |
| 754-0230 | 75-008 | LG 301 |
| 754-0234 | 75-441 | LG 334 |
| 754-0240 | 75-009 | LG 301 |
| 754-0241 | 75-012 | LG 301 |
| 754-0266 | 75-016 | LG 301 |
| 954-0145 | 75-145 | LG 300 |
| 954-0145A | 75-145 | LG 300 |
| 954-0151 | 75-004 | LG 301 |
| 954-015A | 75-145 | LG 300 |

X



* OREGON® Gator™ replacement blade

| OEM No. | OREGON | Page |
|---|---|---|
| 954-0178 | 75-179 | LG 310 |
| 954-0201 | 75-441 | LG 334 |
| 954-0230 | 75-008 | LG 301 |
| 954-0234 | 75-441 | LG 334 |
| 954-0240 | 75-009 | LG 301 |
| 954-0241 | 75-012 | LG 301 |
| 954-0241A | 75-012 | LG 301 |
| 954-0266 | 75-016 | LG 301 |
| 954-0266A | 75-016 | LG 301 |
| **BLUEBIRD** | | |
| 0522361 | 89-001 | LG 590 |
| 108111 | 41-899 | LG 590 |
| 343 | 34-028 | LG 821 |
| 5002 | 41-008 | LG 590 |
| 5201 | 40-707 | LG 590 |
| 539005201 | 40-707 | LG 590 |
| 7190 | 89-001 | LG 590 |
| **BMB** | | |
| 5224 | 91-080 | LG 490 |
| **BOBCAT** | | |
| 03239 | 396-716* | LG 451 |
| 03239 | 596-310* | LG 447 |
| 03239 | 93-005 | LG 447 |
| 03239 | 93-009 | LG 476 |
| 03239 | 96-310* | LG 444 |
| 101002 | 78-650 | LG 835 |
| 108078 | 45-104 | LG 939 |
| 108208 | 33-028 | LG 947 |
| 112111-01 | 593-600* | LG 385 |
| 112111-01 | 93-005 | LG 447 |
| 112111-01 | 93-009 | LG 476 |
| 112111-02 | 393-601* | LG 582 |
| 112111-02 | 593-601* | LG 386 |
| 112111-02 | 93-006 | LG 444 |
| 112111-02 | 93-010 | LG 432 |
| 112111-02 | 93-601* | LG 432 |
| 112111-03 | 396-702* | LG 480 |
| 112111-03 | 596-702* | LG 388 |
| 112111-03 | 93-008 | LG 510 |
| 112111-03 | 93-011 | LG 557 |
| 112111-03 | 96-702* | LG 491 |
| 112111-04 | 93-025 | LG 482 |
| 112111-07 | 393-026* | LG 388 |
| 112243-03 | 396-702* | LG 480 |
| 112243-03 | 596-702* | LG 388 |
| 112243-03 | 93-008 | LG 510 |
| 112243-03 | 93-013 | LG 480 |
| 112243-03 | 96-702* | LG 491 |
| 118020-07 | 60-410 | LG 703 |
| 1211-02 | 93-010 | LG 432 |
| 12111-02 | 93-006 | LG 444 |
| 1226028 | 33-183 | LG 735 |
| 1226167 | 33-183 | LG 735 |
| 126026 | 48-320 | LG 238 |
| 126167 | 33-183 | LG 735 |
| 126167/128028 | 33-183 | LG 735 |
| 128003 | 75-193 | LG 269 |
| 128009 | 33-384 | LG 947 |
| 128018 | 78-116 | LG 826 |
| 128028 | 33-183 | LG 735 |
| 128036 | 33-027 | LG 947 |
| 128079 | 45-300 | LG 804 |
| 128099 | 75-125 | LG 269 |
| 128132 | 33-183 | LG 735 |
| 128169 | 78-116 | LG 826 |
| 138011 | 45-302 | LG 804 |
| 138031 | 33-015 | LG 948 |
| 148042 | 45-031 | LG 232 |
| 148042 | 45-063 | LG 230 |
| 16C109 | 48-211 | LG 233 |
| 16N238 | 33-015 | LG 948 |
| 188018 | 33-114 | LG 734 |
| 188019 | 33-114 | LG 734 |
| 2186153 | 82-017 | LG 875 |
| 2186154 | 82-019 | LG 875 |
| 2186205 | 82-019 | LG 875 |
| 2186207 | 82-017 | LG 875 |
| 2188128 | 15-247 | LG 268 |
| 2188134 | 75-207 | LG 256 |
| 2188151 | 33-115 | LG 738 |
| 2188153 | 33-082 | LG 946 |
| 2306005 | 34-007 | LG 826 |
| 2306005 | 78-021 | LG 832 |
| 2308052 | 15-248 | LG 268 |
| 2701410 | 89-001 | LG 590 |
| 2702758 | 82-018 | LG 875 |
| 2720213 | 09-803 | LG 697 |
| 2720459 | 82-016 | LG 875 |
| 2720475 | 72-739 | LG 1046 |
| 2720475-02 | 72-739 | LG 1046 |
| 2720646 | 72-741 | LG 1046 |
| 2720758 | 82-018 | LG 875 |
| 2720759 | 82-016 | LG 875 |
| 2720815 | 15-249 | LG 268 |
| 2720948 | 15-250 | LG 268 |
| 2721337 | 33-115 | LG 738 |
| 2721337 | 33-136 | LG 737 |
| 2721477 | 15-101 | LG 269 |
| 2721478 | 15-102 | LG 269 |
| 2721512 | 72-161 | LG 1038 |
| 2721642 | 15-103 | LG 269 |
| 2721801 | 33-028 | LG 947 |
| 2722016 | 33-114 | LG 734 |
| 2722016 | 33-132 | LG 735 |
| 2722228 | 72-739 | LG 1046 |
| 2722453-03 | 396-702* | LG 480 |
| 2722453-03 | 596-702* | LG 388 |
| 2722453-03 | 96-702* | LG 491 |
| 272254302 | 393-601* | LG 582 |
| 272254302 | 593-601* | LG 386 |
| 272254302 | 93-601* | LG 432 |
| 2722543-03 | 93-008 | LG 510 |
| 2722543-03 | 93-011 | LG 557 |
| 2722543-03 | 93-013 | LG 480 |
| 272543-01 | 93-009 | LG 476 |
| 2725543-01 | 93-005 | LG 447 |
| 2922 | 33-386 | LG 942 |
| 303164 | 09-802 | LG 233 |
| 30613A | 48-205 | LG 694 |
| 31004 | 48-080 | |
| 31008B | 78-649 | LG 841 |
| 31011B | 78-640 | LG 835 |
| 31012A | 78-649 | LG 841 |
| 32022 | 396-726* | LG 391 |
| 32022 | 596-344* | LG 495 |
| 32022 | 93-006 | LG 444 |
| 32022 | 96-344* | LG 536 |
| 32022A | 396-726* | LG 391 |
| 32022A | 596-344* | LG 495 |
| 32022A | 93-006 | LG 444 |
| 32022A | 93-010 | LG 432 |
| 32022A | 96-344* | LG 536 |
| 32022HD | 396-726* | LG 391 |
| 32022HD | 596-344* | LG 495 |
| 32022HD | 93-006 | LG 444 |
| 32022HD | 93-010 | LG 432 |
| 32022HD | 96-344* | LG 536 |
| 32061 | 396-716* | LG 451 |
| 32061 | 596-310* | LG 447 |
| 32061 | 93-005 | LG 447 |
| 32061 | 93-009 | LG 476 |
| 32061 | 96-310* | LG 444 |
| 32061A | 93-005 | LG 447 |
| 32061A | 93-009 | LG 476 |
| 3239 | 396-716* | LG 451 |
| 3239 | 596-310* | LG 447 |
| 3239 | 93-005 | LG 447 |
| 3239 | 93-009 | LG 476 |
| 3239 | 96-310* | LG 444 |
| 33014A | 45-078 | LG 230 |
| 33050 | 45-078 | LG 230 |
| 338875 | 89-001 | LG 590 |
| 35006N | 48-211 | LG 233 |
| 35008N | 45-220 | LG 232 |
| 35010A | 43-075 | |
| 35051-01 | 07-107 | LG 774 |
| 35051A | 07-107 | LG 774 |
| 35062B | 48-211 | LG 233 |
| 35063N | 48-211 | LG 233 |
| 36006N | 82-306 | LG 874 |
| 36013A | 48-205 | LG 694 |
| 36022N | 48-200 | LG 694 |
| 36082N | 82-307-0 | LG 874 |
| 36129 | 48-200 | LG 694 |
| 36306 | 48-205 | LG 694 |
| 36306.7 | 48-205 | LG 694 |
| 36411.2 | 48-135 | LG 694 |
| 36526 | 48-135 | LG 694 |
| 36567 | 82-320 | LG 874 |
| 380101A | 78-021 | LG 832 |
| 38010-1A | 34-007 | LG 826 |
| 38010-2A | 78-031 | LG 826 |
| 38012N | 72-745 | LG 1033 |
| 38015N | 75-072 | LG 268 |
| 38016 | 75-240 | LG 297 |
| 38016N | 75-240 | LG 297 |
| 38017N | 75-221 | LG 280 |
| 38018N | 78-641 | LG 835 |
| 38020 | 06-003 | LG 805 |
| 38022B | 78-643 | LG 835 |
| 38030 | 75-058 | LG 255 |
| 38030N | 75-058 | LG 255 |
| 38042N | 45-014 | LG 225 |
| 38073N | 75-240 | LG 297 |
| 38074N | 75-221 | LG 280 |
| 38076N | 75-072 | LG 268 |
| 38077N | 75-058 | LG 255 |
| 38111 | 75-072 | LG 268 |
| 38136 | 15-253 | LG 267 |
| 38183 | 78-678 | LG 835 |
| 38184-1 | 34-028 | LG 821 |
| 38184-1 | 78-020 | LG 825 |
| 38184-2 | 78-020 | LG 825 |
| 38204 | 48-148 | LG 695 |
| 38212 | 75-212 | LG 268 |
| 38214 | 78-651 | LG 835 |
| 38264 | 72-741 | LG 1046 |
| 38264 | 72-796 | LG 1043 |
| 38273 | 45-121 | LG 230 |
| 38274 | 45-121 | LG 230 |
| 38275 | 15-254 | LG 267 |
| 38283 | 07-107 | LG 774 |
| 38297 | 78-111 | LG 826 |
| 38330 | 15-255 | LG 267 |
| 38331 | 15-256 | LG 267 |
| 38348-01 | 45-225 | LG 232 |
| 38362 | 15-257 | LG 267 |
| 38363 | 15-258 | LG 267 |
| 38382 | 33-015 | LG 948 |
| 38383 | 33-084 | LG 948 |
| 38385 | 15-259 | LG 267 |
| 38389 | 75-128 | LG 253 |
| 38440 | 75-180 | LG 254 |
| 38442 | 75-130 | LG 269 |
| 38456 | 78-641 | LG 835 |
| 38458 | 75-131 | LG 269 |
| 38460 | 78-651 | LG 835 |
| 38462 | 15-260 | LG 268 |
| 38463 | 75-131 | LG 269 |
| 38510 | 72-741 | LG 1046 |
| 38523 | 75-095 | LG 268 |
| 38528 | 15-261 | LG 268 |
| 38528DF | 75-133 | LG 269 |
| 38665 | 33-334 | LG 730 |
| 38665 | 33-335 | LG 730 |
| 38665 | 33-336 | LG 730 |
| 38666 | 07-107 | LG 774 |
| 3970242 | 72-161 | LG 1038 |
| 4118008 | 33-028 | LG 947 |
| 4127338 | 33-015 | LG 948 |
| 4129570 | 33-028 | LG 947 |
| 4143636 | 15-104 | LG 269 |
| 4163569 | 15-105 | LG 269 |
| 42139B | 396-731* | LG 427 |
| 42139B | 93-025 | LG 482 |
| 42180B | 396-727* | LG 467 |
| 42180B | 596-347* | LG 448 |
| 42180B | 93-008 | LG 510 |
| 42180B | 93-011 | LG 557 |
| 42180B | 93-013 | LG 480 |
| 42180B | 96-347* | LG 387 |
| 43180 | 45-188 | LG 230 |
| 48015N | 07-315 | LG 772 |
| 48019 | 15-262 | LG 268 |
| 48032B | 33-386 | LG 942 |
| 48035A | 33-330 | LG 729 |
| 48053-2A | 48-320 | LG 238 |
| 48094A | 45-243 | LG 243 |
| 48094A | 45-257 | LG 245 |
| 48238A | 15-264 | LG 268 |
| 48250 | 45-015 | LG 233 |
| 48280A | 15-265 | LG 268 |
| 48376 | 15-266 | LG 268 |
| 48426 | 30-026 | LG 208 |
| 48587 | 07-315 | LG 772 |
| 503314 | 09-804 | LG 233 |
| 522361 | 89-001 | LG 590 |
| 64123-147 | 72-746 | LG 1032 |
| 64163-07 | 09-808 | LG 697 |
| 64163-12 | 09-802 | LG 233 |
| 64163-14 | 09-801 | LG 229 |
| 64163-22 | 09-803 | LG 697 |
| 64163-22A | 09-804 | LG 233 |
| 64163-71 | 09-801 | LG 229 |
| 71002B | 80-122 | LG 340 |
| 72039B | 93-008 | LG 510 |
| 72039B | 93-011 | LG 557 |
| 72039B | 93-013 | LG 480 |
| 73028-1 | 72-746 | LG 1032 |
| 76009N | 72-746 | LG 1032 |
| 76010 | 72-747 | LG 1036 |
| 76080-1C | 72-746 | LG 1032 |
| 76080-2C | 72-747 | LG 1036 |
| 76081-2C | 72-747 | LG 1036 |
| 76096-1C | 72-746 | LG 1032 |
| 76096-2C | 72-747 | LG 1036 |
| 76104C | 72-746 | LG 1032 |
| 76167 | 72-746 | LG 1032 |
| 76168 | 72-747 | LG 1036 |
| 78001A | 72-746 | LG 1032 |
| 78005N | 72-747 | LG 1036 |
| 78030N | 15-267 | LG 268 |
| 78031N | 15-268 | LG 268 |
| A203603 | 45-257 | LG 245 |
| A203705 | 45-220 | LG 232 |
| A209300 | 48-211 | LG 233 |
| A491014 | 75-072 | LG 268 |
| BAA0028 | 48-211 | LG 233 |
| BAA0031 | 43-075 | |
| BAA0042 | 82-306 | LG 874 |
| BAA0047 | 48-205 | LG 694 |
| BAA0053 | 48-200 | LG 694 |
| BAA0070 | 75-221 | LG 280 |
| BAA0071 | 78-641 | LG 835 |
| BAA0073 | 78-643 | LG 835 |
| BAA0105 | 78-640 | LG 835 |
| BAA0203 | 45-078 | LG 230 |

X

* OREGON® Gator™ replacement blade

# 2019 OEM X-Reference

| OEM No. | OREGON | Page |
|---|---|---|
| **BOBCAT** | | |
| BAA0230 | 07-107 | LG 774 |
| BAA0231 | 07-107 | LG 774 |
| BAA0336 | 45-014 | LG 225 |
| BAA0393 | 33-386 | LG 942 |
| BAA1362 | 45-014 | LG 225 |
| BAA1363 | 45-015 | LG 233 |
| BAE6129 | 48-200 | LG 694 |
| BAF8587 | 07-315 | LG 772 |
| BAM8078 | 45-104 | LG 939 |
| BAP8036 | 33-027 | LG 947 |
| BAQ8011 | 45-302 | LG 804 |
| BAQ8031 | 33-015 | LG 948 |
| BAR8042 | 45-031 | LG 232 |
| H980381 | 45-104 | LG 939 |
| PL0457 | 48-200 | LG 694 |
| PL0617 | 09-802 | LG 233 |
| PL4275 | 75-720 | LG 270 |
| PL4517 | 33-027 | LG 947 |
| PL4518 | 33-015 | LG 948 |
| W036082 | 82-307-0 | LG 874 |
| W036306 | 48-205 | LG 694 |
| W036411 | 48-135 | LG 694 |
| W038183 | 78-678 | LG 835 |
| W038264 | 72-741 | LG 1046 |
| W038283 | 07-107 | LG 774 |
| W048587 | 07-315 | LG 772 |
| W108208 | 33-028 | LG 947 |
| W128009 | 33-384 | LG 947 |
| W128036 | 33-027 | LG 947 |
| W148042 | 45-031 | LG 232 |
| W38274 | 45-121 | LG 230 |
| W38278 | 45-121 | LG 230 |
| WM132022 | 396-726* | LG 391 |
| WM132022 | 596-344* | LG 495 |
| WM132022 | 93-006 | LG 444 |
| WM132022 | 93-010 | LG 432 |
| WM132022 | 96-344* | LG 536 |
| WM132061 | 396-716* | LG 451 |
| WM132061 | 596-310* | LG 447 |
| WM132061 | 93-005 | LG 447 |
| WM132061 | 96-310* | LG 444 |
| WM142139B | 396-731* | LG 427 |
| WM142180B | 396-727* | LG 467 |
| WM142180B | 596-347* | LG 448 |
| WM142180B | 93-008 | LG 510 |
| WM142180B | 93-011 | LG 557 |
| WM142180B | 93-013 | LG 480 |
| WM142180B | 96-347* | LG 387 |
| WMTA3206 | 396-716* | LG 451 |
| WMTA3206 | 596-310* | LG 447 |
| WMTA3206 | 93-005 | LG 447 |
| WMTA3206 | 96-310* | LG 444 |
| WMTA32061 | 396-716* | LG 451 |
| WMTA32061 | 596-310* | LG 447 |
| WMTA32061 | 93-005 | LG 447 |
| WMTA32061 | 96-310* | LG 444 |
| WMTH32061 | 93-005 | LG 447 |
| **BOLENS (ALSO SEE MTD)** | | |
| 110-8460 | 75-727 | LG 319 |
| 110-8463 | 75-101 | LG 269 |
| 110-8478 | 75-090 | LG 301 |
| 118-5275 | 45-205 | LG 228 |
| 118-5276 | 45-206 | LG 231 |
| 118-5828 | 45-295 | LG 232 |
| 170-3896 | 07-400 | LG 767 |
| 171-0566 | 34-005 | LG 821 |
| 171-0567 | 34-030 | LG 821 |
| 1710811 | 75-120 | LG 300 |
| 171-0873 | 34-027 | LG 821 |
| 171-3802 | 34-028 | LG 821 |
| 171-3803 | 34-009 | LG 821 |
| 171-4742 | 34-015 | LG 821 |
| 171-4742 | 78-114 | LG 829 |
| 171-5340 | 34-006 | LG 821 |
| 171-6584 | 34-029 | LG 821 |
| 171-7584 | 34-029 | LG 821 |
| 171-8029 | 07-400 | LG 767 |
| 171-9859 | 83-300 | LG 819 |
| 172-0567 | 34-030 | LG 821 |
| 172-0727 | 75-367 | LG 306 |
| 1720859 | 76-067-0 | LG 726 |
| 172-2883 | 91-093 | LG 389 |
| 172-4488 | 34-015 | LG 821 |
| 172-4488 | 78-114 | LG 829 |
| 172491 | 07-102 | LG 774 |
| 172-5522 | 91-093 | LG 389 |
| 172-6450 | 83-300 | LG 819 |
| 172-6660 | 34-030 | LG 821 |
| 1727491 | 07-102 | LG 774 |
| 172-7926 | 91-097 | LG 388 |
| 172-7978 | 34-031 | LG 821 |
| 172-8255 | 45-259 | LG 224 |
| 172-9440 | 34-002 | LG 821 |
| 173-0412 | 91-096 | LG 389 |
| 173-0634 | 91-586 | LG 485 |
| 173-5583 | 72-306 | LG 1038 |
| 1737899 | 75-066 | LG 251 |
| 173-7899 | 75-066 | LG 251 |
| 173-8433 | 07-392 | LG 767 |
| 173-8571 | 91-096 | LG 389 |
| 174-4090 | 34-003 | LG 821 |
| 174-8302 | 91-714 | LG 543 |
| 175-1569 | 33-330 | LG 729 |
| 175-1736 | 34-023 | LG 822 |
| 175-2137 | 33-334 | LG 730 |
| 175-3539 | 33-334 | LG 730 |
| 175-4637 | 34-003 | LG 821 |
| 175-8846 | 72-306 | LG 1038 |
| 177-2144 | 91-097 | LG 388 |
| 177-2145 | 91-096 | LG 389 |
| 181036 | 72-306 | LG 1038 |
| 189-4272 | 75-635 | LG 314 |
| 742-04043 | 598-640* | LG 405 |
| 742-04043 | 98-640* | LG 574 |
| 742-04049 | 98-637* | LG 512 |
| 742-04124-X | 98-637* | LG 512 |
| 742-04125-X | 598-640* | LG 405 |
| 742-04125-X | 98-640* | LG 574 |
| 742-0610 | 198-058 | LG 517 |
| 742-0610 | 598-628* | LG 517 |
| 742-0610 | 98-628* | LG 389 |
| 742-0610A | 198-058 | LG 517 |
| 742-0610A | 598-628* | LG 517 |
| 742-0610A | 98-628* | LG 389 |
| 742-0610A-0637 | 198-058 | LG 517 |
| 742-0610A-0637 | 598-628* | LG 517 |
| 742-0610A-0637 | 98-628* | LG 389 |
| 742-0611 | 198-063 | LG 513 |
| 742-0611 | 598-640* | LG 405 |
| 742-0611 | 98-640* | LG 574 |
| 742-0611A | 198-063 | LG 513 |
| 742-0611A | 598-640* | LG 405 |
| 742-0611A | 98-640* | LG 574 |
| 742-0611-X | 598-640* | LG 405 |
| 742-0611-X | 98-640* | LG 574 |
| 742-0612 | 98-061 | LG 404 |
| 742-0612 | 98-637* | LG 512 |
| 742-0612A | 98-061 | LG 404 |
| 742-0612A | 98-637* | LG 512 |
| 742-0612-X | 98-637* | LG 512 |
| 742-0616 | 198-059 | LG 403 |
| 742-0616 | 598-629* | LG 575 |
| 742-0616 | 98-629* | LG 412 |
| 742-0616A | 198-059 | LG 403 |
| 742-0616A | 598-629* | LG 575 |
| 742-0616A | 98-629* | LG 412 |
| 742-0640 | 98-068 | LG 389 |
| 742-0654 | 198-052 | LG 389 |
| 742-0654 | 598-628* | LG 517 |
| 742-0654 | 98-628* | LG 389 |
| 742-0740 | 98-066 | LG 409 |
| 742-0741 | 198-049 | LG 518 |
| 742-0741 | 598-631* | LG 390 |
| 742-0741 | 98-631* | LG 390 |
| 754-0468 | 75-993 | LG 303 |
| 942-04124-X | 98-637* | LG 512 |
| 942-04125-X | 598-640* | LG 405 |
| 942-04125-X | 98-640* | LG 574 |
| 942-0610 | 198-058 | LG 517 |
| 942-0610 | 598-628* | LG 517 |
| 942-0610 | 98-628* | LG 389 |
| 942-0610A | 198-058 | LG 517 |
| 942-0610A | 598-628* | LG 517 |
| 942-0610A | 98-628* | LG 389 |
| 942-0611 | 198-063 | LG 513 |
| 942-0611 | 598-640* | LG 405 |
| 942-0611 | 98-640* | LG 574 |
| 942-0611A | 198-063 | LG 513 |
| 942-0611A | 598-640* | LG 405 |
| 942-0611A | 98-640* | LG 574 |
| 942-0612 | 98-061 | LG 404 |
| 942-0612 | 98-637* | LG 512 |
| 942-0612A | 98-061 | LG 404 |
| 942-0612A | 98-637* | LG 512 |
| 942-0612-X | 98-637* | LG 512 |
| 942-0616 | 198-059 | LG 403 |
| 942-0616 | 598-629* | LG 575 |
| 942-0616 | 98-629* | LG 412 |
| 942-0616A | 198-059 | LG 403 |
| 942-0616A | 598-629* | LG 575 |
| 942-0616A | 98-629* | LG 412 |
| 942-0640 | 98-068 | LG 389 |
| 942-0654 | 198-052 | LG 389 |
| 942-0654 | 598-628* | LG 517 |
| 942-0654 | 98-628* | LG 389 |
| 942-0740 | 98-066 | LG 409 |
| 942-0741 | 198-049 | LG 518 |
| 942-0741 | 598-631* | LG 390 |
| 942-0741 | 98-631* | LG 390 |
| 942-0741A | 198-049 | LG 518 |
| 942-0741A | 598-631* | LG 390 |
| 942-0741A | 98-631* | LG 390 |
| 951-3013 | 07-102 | LG 774 |
| 954-0468 | 75-993 | LG 303 |
| GW-7420610 | 198-058 | LG 517 |
| GW-7420610 | 598-628* | LG 517 |
| GW-7420610 | 98-628* | LG 389 |
| OEM-742-0610 | 198-058 | LG 517 |
| OEM-742-0610 | 598-628* | LG 517 |
| OEM-742-0610 | 98-628* | LG 389 |
| OEM-742-0616 | 198-059 | LG 403 |
| OEM-742-0616 | 598-629* | LG 575 |
| OEM-742-0616 | 98-629* | LG 412 |
| **BOSCH** | | |
| 0332 209-150 | 33-319-0 | LG 729 |
| 601053 | 33-317-0 | LG 729 |
| FR8DC | 77-303-1 | LG 865 |
| HS5E | 77-316-1 | LG 865 |
| HS8E | 77-304-1 | LG 865 |
| HS8E | 77-318-1 | LG 865 |
| W2C | 77-323-1 | LG 865 |
| W6D | 77-315-1 | LG 865 |
| W7AC | 77-305-1 | LG 865 |
| W8A | 77-321-1 | LG 865 |
| W8DC | 77-310-1 | LG 865 |
| W8E | 77-317-1 | LG 865 |
| W9ECO | 77-313-1 | LG 865 |
| W9EO | 77-301-1 | LG 864 |
| WR8DS | 77-314-1 | LG 865 |
| WS5F | 77-311-1 | LG 865 |
| WS7E | 77-308-1 | LG 865 |
| WS7F | 77-309-1 | LG 865 |
| WS8E | 77-302-1 | LG 864 |
| WS8F | 77-300-1 | LG 864 |
| WSR5F | 77-307-1 | LG 865 |
| WSR9E | 77-324-1 | LG 865 |
| **BRIGGS & STRATTON** | | |
| 100067 | 42-005 | LG 744 |
| 100068 | 42-005 | LG 744 |
| 189482GS | 30-101 | LG 179 |
| 19374 | 42-452 | LG 867 |
| 199948 | 43-011 | LG 935 |
| 220197 | 33-201 | LG 867 |
| 220790 | 02-107 | LG 723 |
| 220796 | 02-107 | LG 723 |
| 221377 | 53-001 | LG 623 |
| 221995 | 49-209 | LG 625 |
| 222698 | 02-407 | LG 790 |
| 222698S | 02-407 | LG 790 |
| 22372 | 02-115 | LG 723 |
| 230318 | 02-861 | LG 766 |
| 231855 | 49-210 | LG 628 |
| 231855S | 49-210 | LG 628 |
| 24518 | 30-920 | LG 186 |
| 24519 | 30-044 | LG 179 |
| 260584 | 49-083 | LG 913 |
| 262594 | 43-403 | LG 936 |
| 270026 | 49-001 | LG 622 |
| 270026 | 49-004 | LG 622 |
| 270067 | 30-913 | LG 185 |
| 270093 | 30-916 | LG 185 |
| 270239 | 49-100 | LG 749 |
| 270251 | 30-908 | LG 185 |
| 270253 | 49-003 | LG 622 |
| 27034 | 49-160 | LG 747 |
| 270341 | 50-027 | LG 747 |
| 270341 | 50-448 | LG 748 |
| 270344 | 02-644-0 | LG 748 |
| 270344S | 02-644-0 | LG 748 |
| 270345 | 49-111 | LG 748 |
| 270345S | 49-111 | LG 748 |
| 270383 | 50-542 | LG 747 |
| 270430 | 50-541 | LG 747 |
| 270447 | 30-910 | LG 186 |
| 270511 | 49-127 | LG 746 |
| 270528 | 30-909 | LG 186 |
| 270528S | 30-909 | LG 186 |
| 270579 | 30-907 | LG 186 |
| 270579S | 30-907 | LG 186 |
| 270781 | 30-920 | LG 186 |
| 270782 | 30-920 | LG 186 |
| 270824 | 49-119 | LG 746 |
| 270833 | 50-101 | LG 746 |
| 270843 | 30-911 | |
| 270848 | 30-903 | LG 186 |
| 270872 | 49-119 | LG 746 |
| 270917 | 49-031 | LG 746 |
| 270979 | 30-923 | LG 186 |
| 270983 | 50-546 | LG 748 |
| 270984 | 50-545 | LG 748 |
| 270988 | 49-213 | LG 623 |
| 271075 | 50-025-0 | LG 747 |
| 271138S | 49-131 | LG 745 |
| 271139 | 49-131 | LG 745 |
| 271139S | 49-131 | LG 745 |
| 271271 | 30-929 | LG 187 |
| 271271S | 30-929 | LG 187 |
| 271466 | 30-923 | LG 186 |
| 271592 | 49-099 | LG 748 |
| 271794 | 30-920 | LG 186 |
| 2717940S | 30-920 | LG 186 |
| 271794S | 30-920 | LG 186 |
| 271840 | 49-129 | LG 745 |
| 271866 | 50-025-0 | LG 747 |
| 271866S | 50-025-0 | LG 747 |
| 271867 | 50-545 | LG 748 |

X



* OREGON® Gator™ replacement blade

## BRIGGS & STRATTON

| OEM No. | OREGON | Page |
|---|---|---|
| 271867S | 50-545 | LG 748 |
| 271868 | 50-546 | LG 748 |
| 271868S | 50-546 | LG 748 |
| 271904 | 49-132 | LG 749 |
| 271916 | 49-115 | LG 746 |
| 271928 | 49-067 | LG 748 |
| 271933 | 30-927 | LG 187 |
| 271936 | 49-095 | LG 746 |
| 271939 | 30-447 | LG 186 |
| 271962 | 30-924 | LG 186 |
| 271962S | 30-924 | LG 186 |
| 271996 | 49-110 | LG 746 |
| 272157 | 50-542 | LG 747 |
| 272157S | 50-542 | LG 747 |
| 272163 | 50-541 | LG 747 |
| 272163S | 50-541 | LG 747 |
| 272167 | 50-544 | LG 747 |
| 272170 | 50-027 | LG 747 |
| 272170 | 50-448 | LG 748 |
| 272198 | 49-114 | LG 746 |
| 27220 | 50-543 | LG 748 |
| 272200 | 50-543 | LG 748 |
| 272200S | 50-543 | LG 748 |
| 272218 | 30-184 | LG 186 |
| 272235 | 30-917 | LG 186 |
| 272235S | 30-917 | LG 186 |
| 272257 | 49-129 | LG 745 |
| 272293 | 49-031 | LG 746 |
| 272296 | 49-129 | LG 745 |
| 272403 | 30-925 | LG 187 |
| 272403S | 30-925 | LG 187 |
| 272405 | 30-960 | LG 187 |
| 272409 | 49-099 | LG 748 |
| 272409S | 49-099 | LG 748 |
| 272410 | 49-067 | LG 748 |
| 272444 | 30-444 | LG 187 |
| 272475 | 49-161 | LG 747 |
| 272475S | 49-161 | LG 747 |
| 272477 | 30-926 | LG 187 |
| 272477S | 30-926 | LG 187 |
| 272481 | 49-132 | LG 749 |
| 272481S | 49-132 | LG 749 |
| 272489 | 49-109 | LG 748 |
| 272490 | 30-929 | LG 187 |
| 272490S | 30-929 | LG 187 |
| 272533 | 30-930 | LG 187 |
| 272536 | 50-027 | LG 747 |
| 272536 | 50-448 | LG 748 |
| 272536S | 50-027 | LG 747 |
| 272536S | 50-448 | LG 748 |
| 272538 | 49-001 | LG 622 |
| 272538 | 49-004 | LG 622 |
| 272538S | 49-001 | LG 622 |
| 272538S | 49-004 | LG 622 |
| 272554 | 49-119 | LG 746 |
| 272554S | 49-119 | LG 746 |
| 272585 | 49-095 | LG 746 |
| 272602 | 49-100 | LG 749 |
| 272602S | 49-100 | LG 749 |
| 272614 | 50-435 | LG 747 |
| 272637 | 49-001 | LG 622 |
| 272637 | 49-004 | LG 622 |
| 272638 | 49-213 | LG 623 |
| 272638S | 49-213 | LG 623 |
| 272653 | 49-069 | LG 746 |
| 272653S | 49-069 | LG 746 |
| 272694 | 50-445 | LG 748 |
| 272694 | 50-448 | LG 748 |
| 272916 | 50-441 | LG 748 |
| 272922 | 30-960 | LG 187 |
| 272996 | 49-067 | LG 748 |
| 273113 | 49-095 | LG 746 |
| 273113S | 49-095 | LG 746 |
| 273185 | 30-930 | LG 187 |
| 273185S | 30-930 | LG 187 |
| 273280 | 50-435 | LG 747 |
| 273280S | 50-435 | LG 747 |
| 273356 | 30-915 | LG 187 |
| 273356S | 30-915 | LG 187 |
| 273364 | 50-438 | LG 747 |
| 27355 | 49-355 | LG 746 |
| 27355S | 49-355 | LG 746 |
| 273638 | 30-914 | LG 187 |
| 273638S | 30-914 | LG 187 |
| 27549 | 49-107 | LG 749 |
| 27549S | 49-107 | LG 749 |
| 27670 | 50-544 | LG 747 |
| 276890 | 30-145 | LG 184 |
| 27803 | 49-112 | LG 749 |
| 27803S | 49-112 | LG 749 |
| 27911 | 49-099 | LG 748 |
| 27918 | 49-123 | LG 746 |
| 27987 | 30-906 | LG 185 |
| 27987S | 30-906 | LG 185 |
| 280036 | 31-908 | LG 929 |
| 280104 | 43-012 | LG 927 |
| 280104S | 43-012 | LG 927 |
| 280117 | 43-100 | LG 932 |
| 280121 | 31-908 | LG 929 |
| 280136 | 31-908 | LG 929 |
| 280439 | 43-100 | LG 932 |
| 280439S | 43-100 | LG 932 |
| 280469 | 43-100 | LG 932 |
| 281165 | 49-246 | LG 627 |
| 281165S | 49-246 | LG 627 |
| 281165S | 49-315 | LG 627 |
| 281370 | 49-413 | LG 749 |
| 281370S | 49-413 | LG 749 |
| 281503 | 31-057 | LG 930 |
| 281503 | 31-064 | LG 931 |
| 281504 | 31-063 | LG 932 |
| 281505 | 31-057 | LG 930 |
| 281505S | 31-057 | LG 930 |
| 281658 | 49-667 | LG 750 |
| 281658S | 49-667 | LG 750 |
| 291071 | 49-989 | LG 602 |
| 291675 | 49-047 | LG 749 |
| 291675S | 49-047 | LG 749 |
| 292293 | 49-031 | LG 746 |
| 293578 | 43-404 | LG 928 |
| 293739 | 33-201 | LG 867 |
| 294201 | 36-101 | LG 750 |
| 294232 | 36-001 | |
| 294303 | 43-400-0 | LG 936 |
| 294367 | 36-101 | LG 750 |
| 294599 | 35-005 | LG 806 |
| 294599S | 35-005 | LG 806 |
| 294628 | 33-182-0 | LG 789 |
| 294698 | 49-102 | LG 602 |
| 295871 | 43-200 | LG 932 |
| 295924 | 33-320-0 | LG 731 |
| 295984 | 07-001 | LG 765 |
| 296188 | 30-081 | LG 205 |
| 297274 | 35-004 | LG 806 |
| 297506 | 35-004 | LG 806 |
| 297506 | 35-023 | LG 806 |
| 297615 | 50-410 | LG 745 |
| 297616 | 50-411 | LG 745 |
| 298090 | 07-101 | LG 775 |
| 298090S | 07-101 | LG 775 |
| 298185 | 33-601 | LG 789 |
| 298310 | 43-404 | LG 928 |
| 298316 | 33-340 | LG 784 |
| 298425 | 07-303 | LG 770 |
| 298502 | 33-362 | LG 784 |
| 298514 | 49-362 | LG 624 |
| 298798 | 43-404 | LG 928 |
| 298830 | 35-002 | LG 806 |
| 298830 | 35-023 | LG 806 |
| 298968 | 33-365 | LG 784 |
| 298989 | 50-408 | LG 745 |
| 299060 | 49-077 | LG 628 |
| 299061 | 33-182-0 | LG 789 |
| 299096 | 49-033 | LG 628 |
| 299366 | 33-365 | LG 784 |
| 299429 | 36-100 | LG 750 |
| 299430 | 36-100 | LG 750 |
| 299477 | 35-006 | LG 808 |
| 299477 | 35-026 | LG 807 |
| 299477S | 35-006 | LG 808 |
| 299477S | 35-026 | LG 807 |
| 299577 | 50-409 | LG 745 |
| 299629 | 35-016 | LG 809 |
| 299636 | 49-006 | LG 622 |
| 299637 | 49-005 | LG 622 |
| 299707 | 49-214 | LG 624 |
| 299819 | 49-040-0 | LG 749 |
| 299819S | 49-040-0 | LG 749 |
| 299852 | 49-102 | LG 602 |
| 299948 | 43-011 | LG 935 |
| 340018 | 30-101 | LG 179 |
| 369865 | 33-005 | LG 927 |
| 390249 | 35-012 | LG 806 |
| 390401 | 36-103 | LG 750 |
| 390402 | 36-103 | LG 750 |
| 390420 | 30-104 | LG 180 |
| 390492 | 30-097 | LG 179 |
| 390930 | 30-044 | LG 179 |
| 390930 | 30-825 | LG 179 |
| 391071 | 49-071 | LG 602 |
| 391086 | 49-045 | LG 749 |
| 391086S | 49-045 | LG 749 |
| 391178 | 33-719 | LG 915 |
| 391313 | 35-014 | LG 806 |
| 391435 | 35-002 | LG 806 |
| 391435 | 35-023 | LG 806 |
| 391483 | 49-041-0 | LG 749 |
| 391483S | 49-041-0 | LG 749 |
| 391512 | 49-054 | LG 632 |
| 391569 | 35-026 | LG 807 |
| 391569S | 35-026 | LG 807 |
| 391643 | 49-006 | LG 622 |
| 391681 | 49-006 | LG 622 |
| 391775 | 36-104 | LG 750 |
| 391780 | 36-005 | LG 750 |
| 391816 | 36-104 | LG 750 |
| 392134 | 31-056 | LG 927 |
| 392286 | 30-022 | LG 179 |
| 392308 | 30-132 | LG 179 |
| 392308S | 30-132 | LG 179 |
| 392329 | 33-345 | LG 784 |
| 392331 | 36-022 | LG 750 |
| 392642 | 30-101 | LG 179 |
| 392642 | 30-809 | LG 179 |
| 392939 | 36-102 | LG 750 |
| 392989 | 35-006 | LG 808 |
| 392989 | 35-026 | LG 807 |
| 393010 | 35-012 | LG 806 |
| 393010S | 35-012 | LG 806 |
| 393152 | 31-908 | LG 929 |
| 393169 | 07-001 | LG 765 |
| 393232 | 35-006 | LG 808 |
| 393232 | 35-010 | LG 809 |
| 393232 | 35-026 | LG 807 |
| 393232S | 35-006 | LG 808 |
| 393232S | 35-026 | LG 807 |
| 393254 | 33-003 | LG 926 |
| 393254 | 33-005 | LG 927 |
| 393374 | 33-402 | LG 731 |
| 393397 | 49-008 | LG 623 |
| 393406 | 30-106 | LG 179 |
| 393411 | 49-412 | LG 745 |
| 393456 | 33-414 | LG 741 |
| 393615 | 35-004 | LG 806 |
| 393725 | 30-105 | LG 179 |
| 393814 | 33-415 | LG 741 |
| 393862 | 49-040-0 | LG 749 |
| 393957 | 30-044 | LG 179 |
| 393957 | 30-825 | LG 179 |
| 393957S | 30-044 | LG 179 |
| 393957S | 30-825 | LG 179 |
| 394018 | 30-101 | LG 179 |
| 394018 | 30-809 | LG 179 |
| 394018S | 30-101 | LG 179 |
| 394018S | 30-809 | LG 179 |
| 394019 | 30-104 | LG 180 |
| 394019 | 30-811 | LG 180 |
| 394019S | 30-104 | LG 180 |
| 394019S | 30-811 | LG 180 |
| 394157 | 49-001 | LG 622 |
| 394157 | 49-004 | LG 622 |
| 394170 | 35-022 | LG 807 |
| 394180 | 35-022 | LG 807 |
| 394209 | 49-123 | LG 746 |
| 394358 | 07-100 | LG 774 |
| 394358S | 07-100 | LG 774 |
| 394502 | 49-070 | LG 604 |
| 394558 | 43-404 | LG 928 |
| 394569 | 35-002 | LG 806 |
| 394569 | 35-023 | LG 806 |
| 394569S | 35-002 | LG 806 |
| 394569S | 35-023 | LG 806 |
| 394665 | 36-005 | LG 750 |
| 394681 | 49-033 | LG 628 |
| 394682 | 49-038 | LG 628 |
| 394683 | 49-360 | LG 628 |
| 394693 | 49-693 | LG 602 |
| 394698 | 49-102 | LG 602 |
| 394805 | 30-162 | LG 222 |
| 394805 | 33-700 | LG 915 |
| 394805 | 33-708 | LG 915 |
| 394805 | 33-770 | LG 915 |
| 394805 | 33-778 | LG 915 |
| 394808 | 33-709 | LG 916 |
| 394808 | 33-771 | LG 916 |
| 394890 | 33-402 | LG 731 |
| 394891 | 33-345 | LG 784 |
| 394895 | 33-345 | LG 784 |
| 394988 | 33-345 | LG 784 |
| 394989 | 49-989 | LG 602 |
| 395007 | 50-027 | LG 747 |
| 395007 | 50-448 | LG 748 |
| 395008 | 50-542 | LG 747 |
| 395019 | 35-023 | LG 806 |
| 395021 | 49-007 | LG 622 |
| 395021 | 49-037 | LG 622 |
| 395051 | 07-016 | LG 762 |
| 395326 | 33-344 | LG 784 |
| 395488 | 33-342 | LG 784 |
| 395488 | 33-362 | LG 784 |
| 395490 | 33-340 | LG 784 |
| 395491 | 33-340 | LG 784 |
| 395492 | 33-344 | LG 784 |
| 395537 | 33-762-0 | LG 926 |
| 395538 | 33-759-0 | LG 926 |
| 395820 | 43-011 | LG 935 |
| 396244 | 07-408 | LG 766 |
| 396306 | 33-719 | LG 915 |
| 396424 | 30-094 | LG 180 |
| 396424S | 30-094 | LG 180 |
| 396865 | 33-005 | LG 927 |
| 397145 | 50-410 | LG 745 |
| 397358 | 33-340 | LG 784 |
| 397795 | 30-700 | LG 180 |
| 397795 | 30-813 | LG 180 |
| 397795S | 30-700 | LG 180 |
| 397795S | 30-813 | LG 180 |
| 397809 | 33-247 | LG 731 |
| 39795S | 30-700 | LG 180 |

* OREGON® Gator™ replacement blade

# 2019 OEM X-Reference

## BRIGGS & STRATTON

| OEM No. | OREGON | Page |
|---|---|---|
| 397974 | 07-304 | LG 770 |
| 397975 | 07-308 | LG 772 |
| 398003 | 33-007 | LG 926 |
| 398101 | 31-907 | LG 929 |
| 398158 | 49-145 | LG 603 |
| 398183 | 49-304 | LG 603 |
| 398188 | 49-036 | LG 628 |
| 398235 | 49-991 | LG 602 |
| 398265 | 33-344 | LG 784 |
| 398593 | 33-342 | LG 784 |
| 398669 | 49-145 | LG 603 |
| 398811 | 33-344 | LG 784 |
| 398825 | 30-104 | LG 180 |
| 398825 | 30-811 | LG 180 |
| 398992 | 49-216 | LG 602 |
| 399039 | 30-038 | LG 187 |
| 399517 | 07-408 | LG 766 |
| 399671 | 43-404 | LG 928 |
| 399676 | 31-056 | LG 927 |
| 399781 | 49-204 | LG 749 |
| 399781S | 49-204 | LG 749 |
| 399806 | 30-107 | LG 180 |
| 399806 | 30-827 | LG 180 |
| 399806S | 30-107 | LG 180 |
| 399806S | 30-827 | LG 180 |
| 399877 | 30-720 | LG 180 |
| 399877S | 30-720 | LG 180 |
| 399928 | 33-709 | LG 916 |
| 399928 | 33-779 | LG 916 |
| 399959 | 30-710 | LG 181 |
| 399959 | 30-800 | LG 181 |
| 399959 | 69-036 | LG 181 |
| 399968 | 30-108 | LG 180 |
| 4101 | 30-800 | LG 181 |
| 4102 | 30-813 | LG 180 |
| 4104 | 30-907 | LG 186 |
| 4105 | 07-101 | LG 775 |
| 4106 | 30-044 | LG 179 |
| 4106 | 30-825 | LG 179 |
| 4107 | 30-917 | LG 186 |
| 4108 | 30-906 | LG 185 |
| 4109 | 30-923 | LG 186 |
| 4110 | 30-924 | LG 186 |
| 4111 | 30-929 | LG 187 |
| 4112 | 07-100 | LG 774 |
| 4114 | 43-012 | LG 927 |
| 4117 | 49-045 | LG 749 |
| 4118 | 49-041-0 | LG 749 |
| 4119 | 31-908 | LG 929 |
| 4124 | 33-210 | LG 867 |
| 4128 | 49-058 | LG 768 |
| 4129 | 07-107 | LG 774 |
| 4129 | 07-112 | LG 774 |
| 4130 | 31-900-0 | LG 929 |
| 4130 | 31-909 | LG 928 |
| 4133 | 30-909 | LG 186 |
| 4135 | 30-101 | LG 179 |
| 4135 | 30-809 | LG 179 |
| 4136 | 30-101 | LG 179 |
| 4136 | 30-104 | LG 180 |
| 4136 | 30-811 | LG 180 |
| 4137 | 30-094 | LG 180 |
| 4138 | 30-107 | LG 180 |
| 4138 | 30-827 | LG 180 |
| 4139 | 30-803 | LG 181 |
| 4140 | 30-736 | LG 185 |
| 4141 | 30-920 | LG 186 |
| 4142 | 30-925 | LG 187 |
| 4145 | 30-826 | LG 181 |
| 4146 | 30-927 | LG 187 |
| 4147 | 30-961 | LG 187 |
| 4148 | 30-928 | |
| 4153 | 83-283 | LG 818 |
| 4153 | 83-503 | LG 818 |
| 4155 | 43-012 | LG 927 |
| 4156 | 49-069 | LG 746 |
| 4157 | 49-001 | LG 622 |
| 4157 | 49-004 | LG 622 |
| 4166 | 30-048 | LG 182 |
| 4166 | 30-820 | LG 182 |
| 4168 | 49-001 | LG 622 |
| 4168 | 49-004 | LG 622 |
| 4170 | 43-100 | LG 932 |
| 4178 | 49-058 | LG 768 |
| 4180 | 49-079 | LG 768 |
| 4194 | 43-012 | LG 927 |
| 4197 | 30-029 | LG 181 |
| 4197 | 30-821 | LG 181 |
| 4199 | 30-926 | LG 187 |
| 4201 | 30-915 | LG 187 |
| 4202 | 49-246 | LG 627 |
| 4204 | 31-057 | LG 930 |
| 4206 | 83-401 | LG 817 |
| 4207 | 30-033 | LG 183 |
| 4209 | 30-032 | LG 182 |
| 4209 | 30-136 | LG 182 |
| 4211 | 30-074 | LG 183 |
| 4211 | 30-829 | LG 183 |
| 4212 | 30-077 | LG 188 |
| 4213 | 30-073 | LG 183 |
| 4214 | 30-074 | LG 183 |
| 4214 | 30-829 | LG 183 |
| 4215 | 30-076 | LG 188 |
| 4223 | 30-032 | LG 182 |
| 4224 | 30-039 | LG 182 |
| 4232 | 30-087 | LG 182 |
| 4233 | 30-145 | LG 184 |
| 4234 | 30-075 | LG 185 |
| 490017 | 49-054 | LG 632 |
| 490075 | 07-307 | LG 770 |
| 490179 | 43-400-0 | LG 936 |
| 490348 | 36-104 | LG 750 |
| 490420 | 33-700 | LG 915 |
| 490420 | 33-708 | LG 915 |
| 490420 | 33-770 | LG 915 |
| 490420 | 33-778 | LG 915 |
| 490421 | 33-005 | LG 927 |
| 490467 | 33-003 | LG 926 |
| 490467 | 33-005 | LG 927 |
| 490522 | 49-095 | LG 746 |
| 490525 | 50-412 | LG 745 |
| 490547 | 35-027 | LG 807 |
| 490566 | 36-102 | LG 750 |
| 490586 | 33-347 | LG 784 |
| 490652 | 31-900-0 | LG 929 |
| 490652 | 31-909 | LG 928 |
| 490920 | 33-708 | LG 915 |
| 490920 | 33-778 | LG 915 |
| 490931 | 49-145 | LG 603 |
| 490937 | 49-304 | LG 603 |
| 491006 | 49-054 | LG 632 |
| 491021 | 30-134 | LG 180 |
| 491056 | 83-283 | LG 818 |
| 491056 | 83-403 | LG 818 |
| 491056S | 83-283 | LG 818 |
| 491288 | 31-908 | LG 929 |
| 491312 | 33-347 | LG 784 |
| 491384 | 30-731 | LG 180 |
| 491413 | 35-022 | LG 807 |
| 491435 | 30-927 | LG 187 |
| 4914355S | 30-927 | LG 187 |
| 491435S | 30-927 | LG 187 |
| 491519 | 30-107 | LG 180 |
| 491519 | 30-827 | LG 180 |
| 491537S | 30-961 | LG 187 |
| 491539 | 49-070 | LG 604 |
| 491546 | 33-417 | LG 731 |
| 491588 | 30-710 | LG 181 |
| 491588 | 30-800 | LG 181 |
| 491588 | 69-036 | LG 181 |
| 491588S | 30-710 | LG 181 |
| 491588S | 30-800 | LG 181 |
| 491588S | 69-036 | LG 181 |
| 491760 | 33-341 | LG 784 |
| 491760 | 33-353 | LG 785 |
| 491823 | 30-928 | |
| 491889 | 43-403 | LG 936 |
| 491922 | 07-700 | LG 767 |
| 492072 | 49-145 | LG 603 |
| 492141 | 43-014 | LG 932 |
| 492333 | 31-057 | LG 930 |
| 492341 | 33-347 | LG 784 |
| 492386 | 07-107 | LG 774 |
| 492416 | 33-341 | LG 784 |
| 492416 | 33-353 | LG 785 |
| 492495 | 49-304 | LG 603 |
| 492495 | 49-305 | LG 603 |
| 492832 | 43-014 | LG 932 |
| 492836 | 07-107 | LG 774 |
| 492836 | 07-112 | LG 774 |
| 492889 | 30-928 | |
| 492932 | 69-281 | LG 814 |
| 492932 | 83-013 | LG 817 |
| 492932 | 83-401 | LG 817 |
| 492932S | 83-013 | LG 817 |
| 492932S | 83-401 | LG 817 |
| 493206 | 30-184 | LG 186 |
| 493219 | 33-418 | LG 731 |
| 493237 | 33-341 | LG 784 |
| 493295 | 31-061 | LG 922 |
| 493327 | 33-353 | LG 785 |
| 493537 | 30-961 | LG 187 |
| 493537S | 30-961 | LG 187 |
| 493625 | 33-399 | LG 944 |
| 493629 | 07-107 | LG 774 |
| 493629 | 07-112 | LG 774 |
| 493640 | 49-235 | LG 625 |
| 493762 | 49-304 | LG 603 |
| 493762 | 49-305 | LG 603 |
| 493824 | 31-041 | LG 932 |
| 493824 | 43-014 | LG 932 |
| 493909 | 30-049 | LG 181 |
| 493909 | 30-803 | LG 181 |
| 493910 | 30-048 | LG 182 |
| 493910 | 30-820 | LG 182 |
| 493936 | 35-004 | LG 806 |
| 493960 | 07-406 | LG 767 |
| 493982 | 07-303 | LG 770 |
| 494241 | 50-412 | LG 745 |
| 494245 | 30-710 | LG 181 |
| 494245 | 30-800 | LG 181 |
| 494245 | 69-036 | LG 181 |
| 494349 | 49-145 | LG 603 |
| 494384 | 49-147 | LG 603 |
| 494385 | 50-437 | LG 745 |
| 494408 | 49-058 | LG 768 |
| 494511 | 30-735 | LG 181 |
| 494511 | 30-826 | LG 181 |
| 494511S | 30-735 | LG 181 |
| 494511S | 30-826 | LG 181 |
| 494539 | 07-125 | LG 766 |
| 494559 | 07-307 | LG 770 |
| 494585 | 35-004 | LG 806 |
| 494586 | 30-029 | LG 181 |
| 494586 | 30-821 | LG 181 |
| 494624 | 49-078 | LG 603 |
| 494768 | 07-406 | LG 767 |
| 494769 | 07-125 | LG 766 |
| 494782 | 31-062 | LG 922 |
| 494788 | 49-218 | LG 628 |
| 494880 | 49-147 | LG 603 |
| 494990 | 33-700 | LG 915 |
| 494990 | 33-708 | LG 915 |
| 494990 | 33-770 | LG 915 |
| 494990 | 33-778 | LG 915 |
| 495100 | 33-709 | LG 916 |
| 495100 | 33-779 | LG 916 |
| 495246 | 30-928 | |
| 495603 | 50-410 | LG 745 |
| 495606 | 49-078 | LG 603 |
| 495766 | 31-062 | LG 922 |
| 495770 | 49-007 | LG 622 |
| 495770 | 49-037 | LG 622 |
| 495799 | 49-147 | LG 603 |
| 495859 | 33-347 | LG 784 |
| 495877 | 33-003 | LG 926 |
| 495877 | 33-005 | LG 927 |
| 495878 | 33-005 | LG 927 |
| 495933 | 49-219 | LG 625 |
| 495970 | 43-404 | LG 928 |
| 496077 | 30-028 | LG 182 |
| 496106 | 35-027 | LG 807 |
| 496106S | 35-027 | LG 807 |
| 496115 | 49-079 | LG 768 |
| 496416 | 49-006 | LG 622 |
| 496418 | 49-005 | LG 622 |
| 496622 | 49-146 | LG 603 |
| 496650 | 31-062 | LG 922 |
| 496659 | 50-411 | LG 745 |
| 496881 | 33-029-1 | LG 927 |
| 496894 | 30-049 | LG 181 |
| 496894 | 30-803 | LG 181 |
| 496894S | 30-049 | LG 181 |
| 496894S | 30-803 | LG 181 |
| 496914 | 33-342 | LG 784 |
| 496984S | 30-049 | LG 181 |
| 497041 | 49-148 | LG 603 |
| 497401 | 33-708 | LG 915 |
| 497401 | 33-778 | LG 915 |
| 497481 | 49-146 | LG 603 |
| 497525 | 33-700 | LG 915 |
| 497525 | 33-708 | LG 915 |
| 497525 | 33-770 | LG 915 |
| 497525 | 33-778 | LG 915 |
| 497535 | 49-147 | LG 603 |
| 497578 | 49-148 | LG 603 |
| 497586 | 50-657 | LG 596 |
| 497595 | 33-700 | LG 915 |
| 497595 | 33-708 | LG 915 |
| 497595 | 33-770 | LG 915 |
| 497595 | 33-778 | LG 915 |
| 497596 | 33-709 | LG 916 |
| 497596 | 33-771 | LG 916 |
| 497598 | 31-061 | LG 922 |
| 497606 | 33-006 | LG 927 |
| 497608 | 33-760-0 | LG 926 |
| 497680 | 31-068 | LG 922 |
| 497725 | 30-029 | LG 181 |
| 497725 | 30-821 | LG 181 |
| 497725S | 30-029 | LG 181 |
| 497725S | 30-821 | LG 181 |
| 497830 | 31-062 | LG 922 |
| 497856 | 50-657 | LG 596 |
| 498116 | 49-220 | LG 603 |
| 498144 | 31-063 | LG 932 |
| 498148 | 33-709 | LG 916 |
| 498148 | 33-771 | LG 916 |
| 498148 | 33-779 | LG 916 |
| 498170 | 50-657 | LG 596 |
| 498260 | 49-304 | LG 603 |
| 498260 | 49-305 | LG 603 |
| 498261 | 49-304 | LG 603 |
| 498261 | 49-305 | LG 603 |
| 498595 | 33-709 | LG 916 |
| 498595 | 33-771 | LG 916 |
| 498596 | 30-022 | LG 179 |
| 498596 | 30-033 | LG 183 |
| 498596 | 30-824 | LG 183 |
| 498596S | 30-033 | LG 183 |

X



* OREGON® Gator™ replacement blade

## BRIGGS & STRATTON

| OEM No. | OREGON | Page |
|---|---|---|
| 498680 | 36-028 | LG 750 |
| 499059 | 50-658 | LG 596 |
| 499220 | 49-221 | LG 604 |
| 499425 | 36-027 | LG 750 |
| 499447 | 33-352-0 | LG 784 |
| 499486 | 30-032 | LG 182 |
| 499486 | 30-136 | LG 182 |
| 499486 | 30-823 | LG 182 |
| 499486S | 30-032 | LG 182 |
| 499486S | 30-136 | LG 182 |
| 499486S | 30-823 | LG 182 |
| 499521 | 33-700 | LG 915 |
| 499521 | 33-708 | LG 915 |
| 499521 | 33-770 | LG 915 |
| 499521 | 33-778 | LG 915 |
| 499685 | 49-223 | LG 604 |
| 499706 | 31-918 | LG 922 |
| 499897 | 31-041 | LG 932 |
| 499901 | 31-041 | LG 932 |
| 499996 | 36-005 | LG 750 |
| 5001H | 30-906 | LG 185 |
| 5010 | 43-400-0 | LG 936 |
| 5010B | 43-400-0 | LG 936 |
| 5010C | 43-400-0 | LG 936 |
| 5010D | 43-400-0 | LG 936 |
| 5010FC | 43-400-0 | LG 936 |
| 5010H | 43-400-0 | LG 936 |
| 5010K | 43-400-0 | LG 936 |
| 5011 | 35-005 | LG 806 |
| 5019 | 35-023 | LG 806 |
| 5019A | 35-023 | LG 806 |
| 5019B | 35-023 | LG 806 |
| 5019C | 35-023 | LG 806 |
| 5019D | 35-023 | LG 806 |
| 5019H | 35-023 | LG 806 |
| 5019K | 35-023 | LG 806 |
| 5021 | 49-007 | LG 622 |
| 5021 | 49-037 | LG 622 |
| 5021A | 49-007 | LG 622 |
| 5021A | 49-037 | LG 622 |
| 5021B | 49-007 | LG 622 |
| 5021B | 49-037 | LG 622 |
| 5021C | 49-007 | LG 622 |
| 5021C | 49-037 | LG 622 |
| 5021D | 49-001 | LG 622 |
| 5021D | 49-004 | LG 622 |
| 5021D | 49-037 | LG 622 |
| 5021FC | 49-007 | LG 622 |
| 5021FC | 49-037 | LG 622 |
| 5021H | 49-037 | LG 622 |
| 5043 | 30-710 | LG 181 |
| 5043 | 30-800 | LG 181 |
| 5043 | 69-036 | LG 181 |
| 5043D | 69-036 | LG 181 |
| 5043H | 69-036 | LG 181 |
| 5047 | 30-917 | LG 186 |
| 5047H | 30-917 | LG 186 |
| 5047K | 30-917 | LG 186 |
| 5050B | 30-101 | LG 179 |
| 5050K | 30-101 | LG 179 |
| 5052H | 30-929 | LG 187 |
| 5052K | 30-929 | LG 187 |
| 5053D | 30-049 | LG 181 |
| 5053H | 30-049 | LG 181 |
| 5063B | 30-032 | LG 182 |
| 5063D | 30-032 | LG 182 |
| 5063H | 30-032 | LG 182 |
| 5063K | 30-032 | LG 182 |
| 5064 | 30-961 | LG 187 |
| 5064H | 30-961 | LG 187 |
| 5064K | 30-961 | LG 187 |
| 5069H | 30-032 | LG 182 |
| 5069K | 30-032 | LG 182 |
| 5074 | 30-962 | LG 188 |
| 5075H | 30-048 | LG 182 |
| 5075K | 30-048 | LG 182 |
| 5076D | 83-280 | LG 815 |
| 5077H | 30-074 | LG 183 |
| 5077H | 30-076 | LG 188 |
| 5077K | 30-074 | LG 183 |
| 5077K | 30-076 | LG 188 |
| 5083H | 49-007 | LG 622 |
| 5083H | 49-037 | LG 622 |
| 5083K | 49-007 | LG 622 |
| 5083K | 49-037 | LG 622 |
| 5084D | 49-058 | LG 768 |
| 5084H | 49-058 | LG 768 |
| 5084K | 49-058 | LG 768 |
| 5085H | 49-079 | LG 768 |
| 5085K | 49-079 | LG 768 |
| 5086 | 43-012 | LG 927 |
| 5086D | 43-012 | LG 927 |
| 5086H | 43-012 | LG 927 |
| 5086K | 30-919 | LG 188 |
| 5086K | 43-012 | LG 927 |
| 5088 | 30-919 | LG 188 |
| 5088H | 30-919 | LG 188 |
| 5099 | 30-919 | LG 188 |
| 5404H | 30-123 | LG 183 |
| 5404K | 30-123 | LG 183 |
| 5405H | 30-145 | LG 184 |
| 5405K | 30-145 | LG 184 |
| 5406 | 33-700 | LG 915 |
| 5406 | 33-708 | LG 915 |
| 5406 | 33-770 | LG 915 |
| 5406 | 33-778 | LG 915 |
| 5406D | 33-700 | LG 915 |
| 5406D | 33-708 | LG 915 |
| 5406D | 33-770 | LG 915 |
| 5406D | 33-778 | LG 915 |
| 5406H | 33-700 | LG 915 |
| 5406H | 33-708 | LG 915 |
| 5406H | 33-770 | LG 915 |
| 5406H | 33-778 | LG 915 |
| 5406K | 33-700 | LG 915 |
| 5406K | 33-708 | LG 915 |
| 5406K | 33-770 | LG 915 |
| 5406K | 33-778 | LG 915 |
| 5407 | 33-709 | LG 916 |
| 5407 | 33-771 | LG 916 |
| 5407D | 33-709 | LG 916 |
| 5407D | 33-771 | LG 916 |
| 5407H | 33-709 | LG 916 |
| 5407H | 33-771 | LG 916 |
| 5407K | 33-709 | LG 916 |
| 5407K | 33-771 | LG 916 |
| 5410H | 33-334 | LG 730 |
| 5410K | 33-334 | LG 730 |
| 590454 | 33-341 | LG 784 |
| 590777 | 50-408 | LG 745 |
| 590781 | 33-345 | LG 784 |
| 591301 | 31-919 | LG 922 |
| 591334 | 30-851 | LG 184 |
| 591420 | 33-342 | LG 784 |
| 591459 | 33-347 | LG 784 |
| 592846 | 33-352-0 | LG 784 |
| 593260 | 30-168 | LG 185 |
| 593934 | 33-772 | LG 916 |
| 594201 | 30-851 | LG 184 |
| 6002 | 07-101 | LG 775 |
| 613022 | 30-073 | LG 183 |
| 61760 | 02-402 | LG 790 |
| 66728 | 31-900-0 | LG 929 |
| 66728 | 31-909 | LG 928 |
| 66768 | 49-667 | LG 750 |
| 671231 | 30-139 | LG 183 |
| 67218 | 02-860 | LG 766 |
| 672772 | 30-139 | LG 183 |
| 68477 | 49-128 | LG 747 |
| 68838 | 49-413 | LG 749 |
| 690032 | 49-225 | LG 604 |
| 690106 | 30-033 | LG 183 |
| 690191 | 49-222 | LG 604 |
| 690192 | 50-437 | LG 745 |
| 690248 | 33-347 | LG 784 |
| 690610 | 30-033 | LG 183 |
| 690610 | 30-824 | LG 183 |
| 690612 | 07-001 | LG 765 |
| 690766 | 53-001 | LG 623 |
| 691016 | 30-914 | LG 187 |
| 691035 | 07-107 | LG 774 |
| 691035 | 07-112 | LG 774 |
| 691060 | 33-352-0 | LG 784 |
| 691185 | 33-402 | LG 731 |
| 691188 | 33-417 | LG 731 |
| 691262 | 33-700 | LG 915 |
| 691262 | 33-708 | LG 915 |
| 691262 | 33-770 | LG 915 |
| 691262 | 33-778 | LG 915 |
| 691564 | 33-740 | LG 916 |
| 691609 | 02-860 | LG 766 |
| 691642 | 30-049 | LG 181 |
| 691642 | 30-803 | LG 181 |
| 691643 | 30-028 | LG 182 |
| 691667 | 30-048 | LG 182 |
| 691667 | 30-820 | LG 182 |
| 691764 | 02-861 | LG 766 |
| 691874 | 35-022 | LG 807 |
| 691894 | 50-438 | LG 747 |
| 692024 | 33-007 | LG 926 |
| 692038 | 35-027 | LG 807 |
| 692046 | 07-304 | LG 770 |
| 692141 | 80-037 | LG 727 |
| 692179 | 02-115 | LG 723 |
| 692190 | 49-128 | LG 747 |
| 692191 | 80-037 | LG 727 |
| 692207 | 49-083 | LG 913 |
| 692218 | 50-101 | LG 746 |
| 692226 | 49-115 | LG 746 |
| 692232 | 49-114 | LG 746 |
| 692236 | 49-031 | LG 746 |
| 692241 | 49-109 | LG 748 |
| 692249 | 50-441 | LG 748 |
| 692252 | 30-915 | LG 187 |
| 692265 | 49-362 | LG 624 |
| 692288 | 50-027 | LG 747 |
| 692288 | 50-445 | LG 748 |
| 692288 | 50-448 | LG 748 |
| 692299 | 31-057 | LG 930 |
| 692299 | 31-064 | LG 931 |
| 692304 | 35-014 | LG 806 |
| 692313 | 07-700 | LG 767 |
| 692318 | 33-399 | LG 944 |
| 692405 | 49-110 | LG 746 |
| 692446 | 30-039 | LG 182 |
| 692513 | 83-285 | LG 814 |
| 692519 | 30-087 | LG 182 |
| 692520 | 30-974 | LG 188 |
| 692605 | 33-341 | LG 784 |
| 692667 | 50-446 | |
| 692703 | 49-223 | LG 604 |
| 693054 | 33-700 | LG 915 |
| 693054 | 33-708 | LG 915 |
| 693054 | 33-770 | LG 915 |
| 693054 | 33-778 | LG 915 |
| 693058 | 43-012 | LG 927 |
| 693059 | 43-012 | LG 927 |
| 693083 | 30-074 | LG 183 |
| 693083 | 30-829 | LG 183 |
| 693469 | 33-740 | LG 916 |
| 693502 | 49-224 | LG 623 |
| 693503 | 49-149 | LG 604 |
| 693508 | 43-012 | LG 927 |
| 693551 | 33-772 | LG 916 |
| 693900 | 31-065 | LG 922 |
| 694056 | 49-070 | LG 604 |
| 694394 | 49-058 | LG 768 |
| 694395 | 49-079 | LG 768 |
| 695157 | 49-225 | LG 604 |
| 695302 | 30-135 | LG 182 |
| 695396 | 83-280 | LG 815 |
| 695540 | 07-253 | LG 761 |
| 695541 | 07-251 | LG 761 |
| 695542 | 07-255 | LG 761 |
| 695666 | 07-064 | LG 775 |
| 695667 | 30-032 | LG 182 |
| 695667 | 30-136 | LG 182 |
| 695708 | 43-012 | LG 927 |
| 695711 | 33-353 | LG 785 |
| 695740 | 31-907 | LG 929 |
| 695854 | 83-280 | LG 815 |
| 695890 | 49-100 | LG 749 |
| 696537 | 31-056 | LG 927 |
| 696539 | 33-003 | LG 926 |
| 696539 | 33-005 | LG 927 |
| 696540 | 33-003 | LG 926 |
| 696540 | 33-005 | LG 927 |
| 696541 | 33-006 | LG 927 |
| 696854 | 83-280 | LG 815 |
| 697014 | 30-074 | LG 183 |
| 697014 | 30-829 | LG 183 |
| 697015 | 30-076 | LG 188 |
| 697029 | 30-033 | LG 183 |
| 697029 | 30-824 | LG 183 |
| 697036 | 33-342 | LG 784 |
| 697037 | 33-340 | LG 784 |
| 697152 | 30-073 | LG 183 |
| 697153 | 30-074 | LG 183 |
| 697153 | 30-122 | LG 183 |
| 697292 | 30-077 | LG 188 |
| 697634 | 30-074 | LG 183 |
| 697634 | 30-829 | LG 183 |
| 698083 | 30-074 | LG 183 |
| 698083 | 30-829 | LG 183 |
| 698181 | 07-125 | LG 766 |
| 698182 | 07-408 | LG 766 |
| 698183 | 07-406 | LG 767 |
| 698185 | 49-223 | LG 604 |
| 698369 | 30-919 | LG 188 |
| 698413 | 30-073 | LG 183 |
| 698717 | 50-027 | LG 747 |
| 698717 | 50-448 | LG 748 |
| 698754 | 30-032 | LG 182 |
| 698754 | 30-136 | LG 182 |
| 699334 | 31-907 | LG 929 |
| 699655 | 36-101 | LG 750 |
| 699833 | 49-132 | LG 749 |
| 699933 | 50-408 | LG 745 |
| 710265 | 30-761 | LG 183 |
| 710266 | 30-762 | LG 183 |
| 710268 | 30-962 | LG 188 |
| 7102688YP | 30-962 | LG 188 |
| 715075 | 49-359 | LG 628 |
| 715155 | 49-361 | LG 628 |
| 715231 | 33-347 | LG 784 |
| 73111GS | 30-702 | LG 185 |
| 790166 | 30-123 | LG 183 |
| 790717 | 33-341 | LG 784 |
| 791850 | 02-040 | LG 765 |
| 792038 | 30-161 | LG 184 |
| 792101 | 30-139 | LG 183 |
| 792105 | 30-145 | LG 184 |
| 792303 | 30-975 | LG 188 |
| 792383 | 49-223 | LG 604 |
| 792385 | 49-223 | LG 604 |
| 792395 | 33-342 | LG 784 |
| 793281 | 33-342 | LG 784 |
| 793352 | 33-342 | LG 784 |
| 793569 | 30-167 | LG 184 |

X

* OREGON® Gator™ replacement blade

# 2019 OEM X-Reference

## BRIGGS & STRATTON

| OEM No. | OREGON | Page |
|---|---|---|
| 793676 | 30-446 | LG 188 |
| 793685 | 30-448 | LG 188 |
| 794071 | 30-449 | LG 188 |
| 794209 | 50-408 | LG 745 |
| 794360 | 33-417 | LG 731 |
| 794421 | 30-073 | LG 183 |
| 795066 | 30-172 | LG 184 |
| 795083 | 49-007 | LG 622 |
| 795083 | 49-037 | LG 622 |
| 795115 | 30-074 | LG 183 |
| 795121 | 33-700 | LG 915 |
| 795121 | 33-708 | LG 915 |
| 795121 | 33-770 | LG 915 |
| 795121 | 33-778 | LG 915 |
| 795315 | 33-347 | LG 784 |
| 795629 | 49-069 | LG 746 |
| 795890 | 83-280 | LG 815 |
| 795990 | 83-030 | LG 815 |
| 796031 | 30-851 | LG 184 |
| 796032 | 30-852 | LG 184 |
| 796254 | 30-181 | LG 189 |
| 796611 | 49-235 | LG 625 |
| 796964 | 33-353 | LG 785 |
| 797007 | 30-073 | LG 183 |
| 797008 | 30-074 | LG 183 |
| 797033 | 30-173 | LG 184 |
| 797182 | 33-402 | LG 731 |
| 797375 | 33-402 | LG 731 |
| 797704 | 30-445 | LG 189 |
| 797819 | 30-186 | LG 184 |
| 798452 | 30-168 | LG 185 |
| 798853 | 33-347 | LG 784 |
| 798897 | 30-182 | LG 185 |
| 799285 | 33-342 | LG 784 |
| 799471 | 33-342 | LG 784 |
| 799579 | 30-183 | LG 189 |
| 799650 | 33-347 | LG 784 |
| 799651 | 33-352-0 | LG 784 |
| 799868 | 50-657 | LG 596 |
| 802574 | 33-341 | LG 784 |
| 802574 | 33-353 | LG 785 |
| 805113 | 30-736 | LG 185 |
| 805259 | 49-413 | LG 749 |
| 805267 | 30-450 | LG 189 |
| 808106 | 33-740 | LG 916 |
| 808281 | 07-700 | LG 767 |
| 808322 | 07-700 | LG 767 |
| 808656 | 07-700 | LG 767 |
| 820263 | 30-075 | LG 185 |
| 841579 | 49-001 | LG 622 |
| 841579 | 49-004 | LG 622 |
| 845907 | 33-402 | LG 731 |
| 846451 | 33-740 | LG 916 |
| 89660 | 49-040-0 | LG 749 |
| 89838 | 42-452 | LG 867 |
| 89966 | 35-001 | LG 806 |
| 89966 | 35-007 | LG 806 |
| 91539 | 80-037 | LG 727 |
| 93053 | 02-040 | LG 765 |
| 95162 | 02-040 | LG 765 |
| 99158 | 45-259 | LG 224 |
| 99333 | 49-363 | LG 624 |
| AM30950 | 33-362 | LG 784 |
| MIU11286 | 30-139 | LG 183 |
| MU710268 | 30-962 | LG 188 |
| T393152 | 31-908 | LG 929 |
| T398188 | 49-036 | LG 628 |
| T490937 | 49-304 | LG 603 |
| T494245 | 30-710 | LG 181 |

## BUNTON-GOODALL

| OEM No. | OREGON | Page |
|---|---|---|
| 128110 | 15-269 | LG 270 |
| 218134 | 75-207 | LG 256 |
| 2186205 | 82-019 | LG 875 |
| 2186207 | 82-017 | LG 875 |
| 2188134 | 75-207 | LG 256 |
| 2188153 | 33-082 | LG 946 |
| 2702758 | 82-018 | LG 875 |
| 2720759 | 82-016 | LG 875 |
| 2721337 | 33-136 | LG 737 |
| 2722016 | 33-132 | LG 735 |
| 483025 | 78-121 | LG 827 |
| P L7323 | 45-225 | LG 232 |
| P0209 | 45-010 | LG 238 |
| P2189 | 72-410 | LG 1030 |
| PAL0368A | 34-023 | LG 822 |
| PAL0368A | 78-031 | LG 826 |
| PAL0806A | 82-308 | LG 874 |
| PAL0903 | 33-386 | LG 942 |
| PG757 | 75-101 | LG 269 |
| PJH1054 | 09-804 | LG 233 |
| PL0371 | 48-080 | |
| PL0417 | 09-801 | LG 229 |
| PL0458 | 45-078 | LG 230 |
| PL0609 | 45-220 | LG 232 |
| PL0622 | 78-644 | LG 835 |
| PL0642 | 72-745 | LG 1033 |
| PL0878 | 48-211 | LG 233 |
| PL0941 | 45-010 | LG 238 |
| PL1246 | 78-646 | LG 841 |
| PL1443 | 15-270 | LG 270 |
| PL4007 | 33-330 | LG 729 |
| PL4205 | 396-735* | LG 452 |
| PL4205 | 596-308* | LG 548 |
| PL4205 | 96-308* | LG 456 |
| PL4206 | 396-726* | LG 391 |
| PL4206 | 596-344* | LG 495 |
| PL4206 | 91-256 | LG 437 |
| PL4206 | 96-344* | LG 536 |
| PL4275 | 75-720 | LG 270 |
| PL4511 | 15-271 | LG 270 |
| PL4513 | 15-272 | LG 270 |
| PL4518 | 33-015 | LG 948 |
| PL4609 | 45-220 | LG 232 |
| PL4732 | 15-274 | LG 270 |
| PL4732 | 15-277 | LG 270 |
| PL4733 | 15-275 | LG 270 |
| PL4734 | 15-276 | LG 270 |
| PL4740 | 15-278 | LG 270 |
| PL4811 | 15-279 | LG 270 |
| PL4813 | 15-280 | LG 270 |
| PL4969 | 45-242 | LG 243 |
| PL5039 | 15-281 | LG 270 |
| PL6011 | 15-282 | LG 270 |
| PL6062 | 15-283 | LG 270 |
| PL7329 | 396-723* | LG 413 |
| PL7329 | 596-323* | LG 453 |
| PL7329 | 91-505 | LG 477 |
| PL7329 | 96-323* | LG 477 |
| PL7332 | 15-286 | LG 270 |
| PL7436 | 15-287 | LG 270 |
| PL7441 | 396-740* | LG 415 |
| PL7441 | 596-319* | LG 415 |
| PL7441 | 91-506 | LG 473 |
| PL7441 | 96-319* | LG 415 |
| PL7488 | 83-400 | LG 819 |
| PL7540 | 72-311-1 | LG 1039 |
| PL8036A | 34-007 | LG 826 |
| PL8122 | 07-315 | LG 772 |
| PL8519 | 15-288 | LG 270 |
| PL8540A | 78-121 | LG 827 |
| PLO035 | 43-075 | |
| PLO417 | 09-801 | LG 229 |
| PLO457 | 48-200 | LG 694 |
| PLO458 | 45-078 | LG 230 |
| PLO511 | 75-222 | LG 252 |
| PLO543 | 15-289 | LG 269 |
| PLO556 | 48-205 | LG 694 |
| PLO609 | 45-220 | LG 232 |
| PLO617 | 09-802 | LG 233 |
| PLO619 | 75-221 | LG 280 |
| PLO622 | 78-644 | LG 835 |
| PLO642 | 72-745 | LG 1033 |
| PLO643 | 75-223 | LG 269 |
| PLO648 | 15-290 | LG 269 |
| PLO661 | 15-291 | LG 269 |
| PLO848 | 15-292 | LG 270 |
| PLO861 | 15-293 | LG 270 |
| PLO878 | 48-211 | LG 233 |
| PLO941 | 45-010 | LG 238 |
| PM221 | 15-294 | LG 270 |
| PO209 | 45-010 | LG 238 |

## BURTON SUPPLY

| OEM No. | OREGON | Page |
|---|---|---|
| 754-0145 | 75-145 | LG 300 |
| 954-0145 | 75-145 | LG 300 |
| 954-0145A | 75-145 | LG 300 |
| 954-015A | 75-145 | LG 300 |

## BUSH HOG

| OEM No. | OREGON | Page |
|---|---|---|
| 50020136 | 15-295 | LG 271 |
| 50029159 | 396-629* | LG 393 |
| 50029159 | 596-629* | LG 393 |
| 50029160 | 396-737* | LG 583 |
| 50033779 | 91-489 | LG 394 |
| 50034299 | 396-629* | LG 393 |
| 50034299 | 596-629* | LG 393 |
| 50034300 | 396-737* | LG 583 |
| 50034306 | 92-149 | LG 392 |
| 50034307 | 396-737* | LG 583 |
| 50044451 | 92-135 | LG 392 |
| 50055707 | 396-629* | LG 393 |
| 50055707 | 596-629* | LG 393 |
| 50056493 | 392-142* | LG 413 |
| 50056493 | 396-629* | LG 393 |
| 50056493 | 596-629* | LG 393 |
| 50056493 | 92-134 | LG 393 |
| 50056494 | 92-149 | LG 392 |
| 50056495 | 396-737* | LG 583 |
| 50056498 | 92-135 | LG 392 |
| 65482 | 15-296 | LG 270 |
| 66474 | 15-297 | LG 270 |
| 66552 | 15-299 | LG 271 |
| 82324 | 396-629* | LG 393 |
| 82324 | 596-629* | LG 393 |
| 82324 | 91-071 | LG 393 |
| 823242 | 396-629* | LG 393 |
| 823242 | 596-629* | LG 393 |
| 823242 | 91-071 | LG 393 |
| 823242 | 91-539 | LG 393 |
| 823242 | 92-134 | LG 393 |
| 823243 | 396-629* | LG 393 |
| 823243 | 596-629* | LG 393 |
| 823243 | 91-071 | LG 393 |
| 823243 | 91-539 | LG 393 |
| 823243 | 92-134 | LG 393 |
| 82325 | 396-737* | LG 583 |
| 82325 | 91-034 | LG 583 |
| 823250 | 396-737* | LG 583 |
| 823250 | 91-034 | LG 583 |
| 823250 | 92-164 | LG 583 |
| 823259 | 396-737* | LG 583 |
| 823259 | 91-034 | LG 583 |
| 823259 | 92-164 | LG 583 |
| 83120 | 15-313 | LG 271 |
| 83121 | 15-314 | LG 271 |
| 83136 | 15-315 | LG 271 |
| 84302 | 15-317 | LG 271 |
| 84303 | 15-318 | LG 271 |
| 86326 | 15-316 | LG 271 |
| 88667 | 115-203 | LG 271 |
| 88668 | 396-712* | LG 449 |
| 88668 | 596-346* | LG 393 |
| 88668 | 91-035 | LG 393 |
| 88668 | 96-346* | LG 449 |
| 88773 | 396-778* | LG 394 |
| 88773 | 91-036 | LG 450 |
| 88773 | 96-778* | LG 394 |
| 88843 | 115-202 | LG 271 |
| 90880 | 15-302 | LG 271 |
| 93991 | 15-303 | LG 271 |
| 94144 | 15-304 | LG 271 |
| 94897 | 15-305 | LG 271 |
| 94898 | 15-306 | LG 271 |
| 94899 | 15-307 | LG 271 |
| 94900 | 15-308 | LG 271 |
| 95754 | 396-629* | LG 393 |
| 95754 | 596-629* | LG 393 |
| 95755 | 396-737* | LG 583 |
| 96814 | 15-309 | LG 271 |
| 97315 | 15-310 | LG 271 |
| 99073 | 33-028 | LG 947 |

## CALDOR

| OEM No. | OREGON | Page |
|---|---|---|
| 754-0240 | 75-009 | LG 301 |
| 754-0241 | 75-012 | LG 301 |
| 754-0241954-0240 | 75-012 | LG 301 |
| 754-0935 | 75-092 | LG 304 |
| 754-0935954-0241A | 75-092 | LG 304 |
| 954-0241 | 75-012 | LG 301 |

## CANADIAN TIRE

| OEM No. | OREGON | Page |
|---|---|---|
| 754-0151 | 75-004 | LG 301 |

## CANADIANA

| OEM No. | OREGON | Page |
|---|---|---|
| 50793 | 34-002 | LG 821 |
| 51448 | 34-012 | LG 821 |

## CARLISLE

| OEM No. | OREGON | Page |
|---|---|---|
| 13X500-6 | 70-376 | LG 958 |
| 13X650-6 | 70-364 | LG 961 |
| 15X500-6 | 70-362 | LG 958 |
| 15X600-6 | 70-365 | LG 961 |
| 16X650-8 | 70-366 | LG 961 |
| 16X650-8 | 70-375 | LG 958 |
| 16X750-8 | 70-367 | LG 961 |
| 18X850-8 | 70-368 | LG 961 |
| 18X850-8 | 70-378 | LG 958 |
| 18X950-8 | 70-369 | LG 961 |
| 20X1000-10 | 70-371 | LG 961 |
| 20X1000-8 | 70-370 | LG 961 |
| 22X1100-8 | 70-363 | LG 963 |
| 23X1050-12 | 70-373 | LG 961 |
| 23X950-12 | 70-372 | LG 961 |
| 410/350-4 | 70-361 | LG 958 |
| 511051 | 70-145 | LG 959 |
| 511075 | 70-146 | LG 959 |
| 5111021 | 70-144 | LG 959 |
| 5112701 | 70-147 | LG 960 |
| 5112801 | 70-148 | LG 960 |
| 511419 | 70-156 | LG 961 |
| 511433 | 70-154 | LG 961 |
| 511505 | 70-162 | LG 964 |
| 518081 | 70-150 | LG 960 |
| 5193171 | 70-149 | LG 960 |
| 5193191 | 70-151 | LG 960 |
| 5193201 | 70-152 | LG 960 |
| 5193211 | 70-153 | LG 960 |
| 5193431 | 70-157 | LG 960 |
| 55A3N1 | 70-161 | LG 964 |
| 55A3N9 | 70-164 | LG 964 |
| 55A3P2 | 70-163 | LG 964 |
| 560443 | 70-165 | LG 964 |
| 560444 | 70-166 | LG 964 |

X



* OREGON® Gator™ replacement blade

| OEM No. | OREGON | Page |
|---|---|---|
| **CARLTON** | | |
| A3E9-66E | 58-242 | LG 958 |
| A3EP-GL25R | 58-040 | LG 961 |
| N1C-GL-56E | 58-110 | LG 960 |
| N1C-GL-57E | 58-114 | LG 960 |
| N1C-GL-62E | 58-112 | LG 960 |
| **CARONI** | | |
| 30800 | 82-019 | LG 875 |
| 30800 | 82-357 | LG 877 |
| 48007700 | 96-603* | LG 394 |
| 59006200 | 91-141 | LG 394 |
| 59006200 | 96-605* | LG 394 |
| 71001000 | 396-707* | LG 395 |
| 71001000 | 91-142 | LG 395 |
| **CASE** | | |
| 12110 | 45-234 | LG 224 |
| 2289 | 76-067-0 | LG 726 |
| 25139 | 72-094 | LG 1042 |
| 25140 | 72-307 | LG 1038 |
| A70090 | 30-080 | LG 205 |
| C12102 | 45-114 | LG 938 |
| C12110 | 45-000 | LG 237 |
| C12251 | 34-024 | LG 822 |
| C13012 | 34-012 | LG 821 |
| C-13012 | 34-012 | LG 821 |
| C15343 | 34-020 | LG 821 |
| C15343 | 78-037 | LG 822 |
| C-15343 | 34-020 | LG 821 |
| C15672 | 34-005 | LG 821 |
| C17213 | 34-034 | LG 821 |
| C18966 | 34-008 | LG 821 |
| C18966 | 34-024 | LG 822 |
| C20465 | 34-023 | LG 822 |
| C20465 | 78-032 | LG 822 |
| C23359 | 15-320 | LG 272 |
| C23456 | 34-031 | LG 821 |
| C-25139 | 72-306 | LG 1038 |
| C26191 | 83-283 | LG 818 |
| C26191 | 83-403 | LG 818 |
| C26525 | 33-334 | LG 730 |
| C26525 | 33-335 | LG 730 |
| C26525 | 33-336 | LG 730 |
| C-26525 | 33-334 | LG 730 |
| C-26525 | 33-336 | LG 730 |
| C266525 | 33-334 | LG 730 |
| C-28025 | 34-008 | LG 821 |
| C-2883 | 30-080 | LG 205 |
| C28883 | 30-819 | LG 205 |
| C-28971 | 45-295 | LG 232 |
| C29735 | 45-207 | LG 236 |
| C33024 | 33-334 | LG 730 |
| C33024 | 33-335 | LG 730 |
| C33024 | 33-336 | LG 730 |
| C33025 | 33-334 | LG 730 |
| C-33025 | 33-334 | LG 730 |
| C-33025 | 33-336 | LG 730 |
| C33445 | 83-010 | LG 819 |
| C33445 | 83-400 | LG 819 |
| C375569 | 33-117 | LG 733 |
| C37891 | 78-044-1 | LG 834 |
| G900-2518 | 78-044-1 | LG 834 |
| N9552 | 33-720 | LG 920 |
| **CENEX** | | |
| 754-0145 | 75-145 | LG 300 |
| 754-0151 | 75-004 | LG 301 |
| 754-0151754-0179 | 75-004 | LG 301 |
| 754-0194 | 75-090 | LG 301 |
| 754-0194954-0266A | 75-090 | LG 301 |
| 754-0201 | 75-441 | LG 334 |
| 754-0234 | 75-441 | LG 334 |
| 754-0240 | 75-009 | LG 301 |
| 754-0240954-0226 | 75-009 | LG 301 |
| 754-0241 | 75-012 | LG 301 |
| 754-0241954-0240 | 75-012 | LG 301 |
| 754-0266 | 75-016 | LG 301 |
| 754-0266954-0241A | 75-016 | LG 301 |
| 754-0935 | 75-092 | LG 304 |
| 954-0145 | 75-145 | LG 300 |
| 954-0145A | 75-145 | LG 300 |
| 954-015A | 75-145 | LG 300 |
| 954-0194 | 75-090 | LG 301 |
| 954-0201 | 75-441 | LG 334 |
| 954-0234 | 75-441 | LG 334 |
| 954-0241 | 75-012 | LG 301 |
| 954-0266 | 75-016 | LG 301 |
| 954-0935 | 75-092 | LG 304 |
| **CENTRAL HARDWARE** | | |
| 754-0145 | 75-145 | LG 300 |
| 754-0151 | 75-004 | LG 301 |
| 754-0230 | 75-008 | LG 301 |
| 754-0266 | 75-016 | LG 301 |
| 754-0293 | 75-018 | LG 301 |
| 954-0145 | 75-145 | LG 300 |
| 954-0145A | 75-145 | LG 300 |
| 954-0151 | 75-004 | LG 301 |
| 954-015A | 75-145 | LG 300 |
| 954-0230 | 75-008 | LG 301 |
| 954-0266 | 75-016 | LG 301 |
| 954-0266A | 75-016 | LG 301 |
| 954-0293 | 75-018 | LG 301 |
| **CHAMPION** | | |
| CJ6 | 77-308-1 | LG 865 |
| CJ6Y | 77-311-1 | LG 865 |
| CJ7Y | 77-300-1 | LG 864 |
| CJ8 | 77-302-1 | LG 864 |
| CJ8 | 77-404 | |
| CJ8Y | 77-309-1 | LG 865 |
| DJ6J | 77-316-1 | LG 865 |
| DJ7Y | 77-318-1 | LG 865 |
| DJ8J | 77-304-1 | LG 865 |
| J17LM | 77-313-1 | LG 865 |
| J17LM | 77-400-0 | |
| J19LM | 77-301-1 | LG 864 |
| J19LM | 77-313-1 | LG 865 |
| J8C | 77-317-1 | LG 865 |
| L86C | 77-321-1 | LG 865 |
| N11YC | 77-310-1 | LG 865 |
| N2C | 77-323-1 | LG 865 |
| N9YC | 77-315-1 | LG 865 |
| RC12YC | 77-303-1 | LG 865 |
| RCJ6Y | 77-307-1 | LG 865 |
| RCJ7Y | 77-324-1 | LG 865 |
| RCJ8 | 77-306-1 | LG 865 |
| RCJ8Y | 77-319-1 | LG 865 |
| RJ19LM | 77-305-1 | LG 865 |
| RN11YC4 | 77-314-1 | LG 865 |
| RN9YC | 77-312-1 | LG 865 |
| **CHANNEL CO.** | | |
| 754-0935 | 75-092 | LG 304 |
| 954-0935 | 75-092 | LG 304 |
| **CIFARELLI** | | |
| 82.058.00 | 49-021 | LG 629 |
| 82.060.00 | 55-333 | LG 633 |
| 82.078.00 | 55-343 | LG 627 |
| 82.079.00 | 55-342 | LG 627 |
| **CLASSEN MFG CO** | | |
| 100032 | 89-001 | LG 590 |
| **CLINTON** | | |
| 002-0233-00 | 30-081 | LG 205 |
| 135-24 | 33-008 | LG 789 |
| 170-159-500 | 35-007 | LG 806 |
| 216-0050-00 | 55-333 | LG 633 |
| 216-0119-00 | 55-333 | LG 633 |
| 293-32-5 | 07-001 | LG 765 |
| 39-268-500 | 49-401 | LG 605 |
| 39-887-500 | 49-401 | LG 605 |
| 39-914-500 | 49-401 | LG 605 |
| 39-931 | 49-201 | LG 608 |
| **CLUB CAR** | | |
| 1016203 | 15-321 | LG 272 |
| 101916701 | 15-322 | LG 272 |
| 41016-67 | 83-282 | LG 817 |
| 41016-67 | 83-402 | LG 817 |
| **COAST TO COAST** | | |
| 754-0145 | 75-145 | LG 300 |
| 754-0151 | 75-004 | LG 301 |
| 754-0178 | 75-179 | LG 310 |
| 754-0194 | 75-090 | LG 301 |
| 754-0201 | 75-441 | LG 334 |
| 754-0230 | 75-008 | LG 301 |
| 754-0234 | 75-441 | LG 334 |
| 754-0240 | 75-009 | LG 301 |
| 754-0241 | 75-012 | LG 301 |
| 754-0266 | 75-016 | LG 301 |
| 754-0293 | 75-018 | LG 301 |
| 754-0329 | 75-145 | LG 300 |
| 754-0350 | 75-035 | LG 302 |
| 754-0935 | 75-092 | LG 304 |
| 954-0145 | 75-145 | LG 300 |
| 954-0145A | 75-145 | LG 300 |
| 954-0151 | 75-004 | LG 301 |
| 954-015A | 75-145 | LG 300 |
| 954-0178 | 75-179 | LG 310 |
| 954-0194 | 75-090 | LG 301 |
| 954-0201 | 75-441 | LG 334 |
| 954-0230 | 75-008 | LG 301 |
| 954-0234 | 75-441 | LG 334 |
| 954-0240 | 75-009 | LG 301 |
| 954-0241 | 75-012 | LG 301 |
| 954-0241A | 75-012 | LG 301 |
| 954-0266 | 75-016 | LG 301 |
| 954-0266A | 75-016 | LG 301 |
| 954-0293 | 75-018 | LG 301 |
| 954-0350 | 75-035 | LG 302 |
| 954-0935 | 75-092 | LG 304 |
| GW-7540350 | 75-035 | LG 302 |
| **COLUMBIA PRODUCTS** | | |
| 754-0145 | 75-145 | LG 300 |
| 754-0151 | 75-004 | LG 301 |
| 754-0178 | 75-179 | LG 310 |
| 754-0194 | 75-090 | LG 301 |
| 754-0230 | 75-008 | LG 301 |
| 754-0234 | 75-441 | LG 334 |
| 754-0254 | 75-120 | LG 300 |
| 754-0266 | 75-016 | LG 301 |
| 754-0935 | 75-092 | LG 304 |
| 954-0145 | 75-145 | LG 300 |
| 954-0145A | 75-145 | LG 300 |
| 954-0151 | 75-004 | LG 301 |
| 954-015A | 75-145 | LG 300 |
| 954-0178 | 75-179 | LG 310 |
| 954-0194 | 75-090 | LG 301 |
| 954-0230 | 75-008 | LG 301 |
| 954-0266 | 75-016 | LG 301 |
| 954-0266A | 75-016 | LG 301 |
| 954-0935 | 75-092 | LG 304 |
| **COMET** | | |
| 203589A | 84-027 | LG 675 |
| 203590 | 15-331 | LG 272 |
| 203591 | 15-333 | LG 272 |
| 203593 | 15-335 | LG 272 |
| 203593A | 15-335 | LG 272 |
| 203594 | 15-337 | LG 272 |
| 203597 | 15-339 | LG 272 |
| **CONCORD** | | |
| 754-0935 | 75-092 | LG 304 |
| 954-0935 | 75-092 | LG 304 |
| **COUNTRY CLIPPER** | | |
| 1-7043 | 91-123 | LG 395 |
| 1-7043 | 91-126 | LG 548 |
| 1714 | 91-123 | LG 395 |
| 79222 | 91-127 | LG 396 |
| 79222 | 91-128 | LG 424 |
| 7-9222 | 91-127 | LG 396 |
| 7-9222 | 91-128 | LG 424 |
| 79369 | 91-123 | LG 395 |
| 79369 | 91-126 | LG 548 |
| 79371 | 91-127 | LG 396 |
| 79371 | 91-128 | LG 424 |
| 7-9371 | 91-127 | LG 396 |
| 7-9371 | 91-128 | LG 424 |
| 79388 | 91-123 | LG 395 |
| 79388 | 91-126 | LG 548 |
| 7-9388 | 91-123 | LG 395 |
| 7-9388 | 91-126 | LG 548 |
| 942-04312 | 98-099 | LG 412 |
| C2897 | 45-227 | LG 234 |
| C-2897 | 45-227 | LG 234 |
| C28971 | 45-227 | LG 234 |
| C-28971 | 45-227 | LG 234 |
| D3389 | 15-350 | LG 272 |
| D3644 | 15-351 | LG 272 |
| D-3645 | 15-352 | LG 272 |
| D-3664 | 15-353 | LG 272 |
| D3671 | 15-354 | LG 272 |
| D3724 | 15-355 | LG 272 |
| D-3727 | 15-356 | LG 272 |
| D-3727-W | 15-356 | LG 272 |
| D3728 | 15-357 | LG 272 |
| D-3733 | 15-358 | LG 272 |
| D-3733-W | 15-358 | LG 272 |
| D3754 | 15-359 | LG 272 |
| D-3764-W | 15-360 | LG 272 |
| D3769 | 15-361 | LG 272 |
| D-3777 | 15-363 | LG 272 |
| D-3777-W | 15-363 | LG 272 |
| D-3778 | 15-364 | LG 272 |
| DOP33-119-1CC | 33-119-1 | LG 734 |
| E6247 | 33-119-1 | LG 734 |
| E-6247 | 33-119-1 | LG 734 |
| H1665 | 91-557 | LG 545 |
| H1665 | 96-343* | LG 395 |
| H-1665 | 91-536 | LG 395 |
| H-1665 | 91-557 | LG 545 |
| H-1665 | 92-150 | LG 395 |
| H-1665 | 96-343* | LG 395 |
| H1666 | 91-126 | LG 548 |
| H1666 | 99-617* | LG 395 |
| H-1666 | 91-123 | LG 395 |
| H-1666 | 91-126 | LG 548 |
| H-1666 | 99-617* | LG 395 |
| H1667 | 91-127 | LG 396 |
| H1667 | 99-615* | LG 552 |
| H-1667 | 91-127 | LG 396 |
| H-1667 | 91-128 | LG 424 |
| H-1667 | 99-615* | LG 552 |
| H1708 | 91-128 | LG 424 |
| H1708 | 99-615* | LG 552 |
| H-1708 | 91-127 | LG 396 |
| H-1708 | 99-615* | LG 552 |
| H1714 | 91-123 | LG 395 |
| H1714 | 99-617* | LG 395 |
| H-1714 | 91-123 | LG 395 |
| H1715 | 92-150 | LG 395 |
| H1715 | 96-343* | LG 395 |

X

* OREGON® Gator™ replacement blade

# 2019 OEM X-Reference

| OEM No. | OREGON | Page |
|---|---|---|
| **COUNTRY CLIPPER** | | |
| H-1715 | 91-536 | LG 395 |
| H-1715 | 91-557 | LG 545 |
| H-1715 | 92-150 | LG 395 |
| H-1715 | 96-343* | LG 395 |
| H1885 | 45-300 | LG 804 |
| H2013 | 96-343* | LG 395 |
| H-2013 | 91-536 | LG 395 |
| H-2013 | 91-557 | LG 545 |
| H-2013 | 92-150 | LG 395 |
| H-2013 | 96-343* | LG 395 |
| H2122 | 99-615* | LG 552 |
| H-2122 | 91-127 | LG 396 |
| H-2122 | 91-128 | LG 424 |
| H-2122 | 99-615* | LG 552 |
| H2202 | 99-617* | LG 395 |
| H-2202 | 91-123 | LG 395 |
| H-2202 | 91-126 | LG 548 |
| H-2202 | 99-617* | LG 395 |
| H2203 | 99-615* | LG 552 |
| H-2203 | 91-127 | LG 396 |
| H-2203 | 91-128 | LG 424 |
| H-2203 | 99-615* | LG 552 |
| H2246 | 91-129 | LG 396 |
| H2246 | 96-129* | LG 396 |
| H-2246 | 91-129 | LG 396 |
| H2251 | 96-129* | LG 396 |
| H-2251 | 91-129 | LG 396 |
| H-2251 | 96-129* | LG 396 |
| H2387 | 96-129* | LG 396 |
| H-2387 | 91-129 | LG 396 |
| H-2387 | 92-179 | LG 396 |
| H-2387 | 96-129* | LG 396 |
| H2397 | 91-544 | LG 397 |
| H2397 | 96-778* | LG 394 |
| H-2397 | 91-544 | LG 397 |
| H2459 | 96-778* | LG 394 |
| H-2459 | 91-036 | LG 450 |
| H-2459 | 91-533 | LG 394 |
| H-2459 | 91-544 | LG 397 |
| H-2459 | 96-778* | LG 394 |
| H2499 | 91-129 | LG 396 |
| H2499 | 96-129* | LG 396 |
| H-2499 | 91-129 | LG 396 |
| H-2499 | 96-129* | LG 396 |
| H2500 | 91-128 | LG 424 |
| H2500 | 99-615* | LG 552 |
| H-2500 | 91-127 | LG 396 |
| H-2500 | 91-128 | LG 424 |
| H-2500 | 99-615* | LG 552 |
| H2501 | 96-778* | LG 394 |
| H-2501 | 91-036 | LG 450 |
| H-2501 | 91-533 | LG 394 |
| H-2501 | 91-544 | LG 397 |
| H-2501 | 92-178 | LG 397 |
| H-2501 | 96-778* | LG 394 |
| H2649 | 392-138* | LG 397 |
| H2649 | 92-138 | LG 396 |
| H-2650 | 92-162 | LG 397 |
| H-2653 | 592-160* | LG 419 |
| H-2653 | 92-160 | LG 395 |
| H-2654 | 592-137* | LG 396 |
| H-2654 | 92-137 | LG 396 |
| H-2655 | 392-138* | LG 397 |
| H-2655 | 92-138 | LG 396 |
| H-2656 | 92-162 | LG 397 |
| H-2659 | 592-160* | LG 419 |
| H-2659 | 92-161 | LG 395 |
| H-2660 | 592-137* | LG 396 |
| H-2660 | 92-163 | LG 396 |
| H-2665 | 592-160* | LG 419 |
| H-2666 | 592-137* | LG 396 |
| H-2667 | 392-138* | LG 397 |
| H-2882 | 592-160* | LG 419 |
| H-2882 | 91-123 | LG 395 |
| H-2882 | 91-126 | LG 548 |
| H-2882 | 92-160 | LG 395 |
| H-2882 | 92-161 | LG 395 |
| H-2882 | 92-180 | LG 395 |
| H-2882 | 99-617* | LG 395 |
| H-2883 | 592-160* | LG 419 |
| H-2883 | 92-154 | LG 396 |
| H-2884 | 592-137* | LG 396 |
| H-2885 | 392-138* | LG 397 |
| H-2885 | 92-166 | LG 397 |
| H-2886 | 392-138* | LG 397 |
| H-2886 | 92-181 | LG 397 |
| H-37 | 15-358 | LG 272 |
| **CRAFTSMAN** | | |
| 100669K | 95-015 | LG 400 |
| 106634X | 95-015 | LG 400 |
| 106635X | 95-014 | LG 374 |
| 106635X | 95-607* | LG 397 |
| 110785X | 95-034 | LG 377 |
| 114884 | 95-044 | LG 465 |
| 120262X | 95-034 | LG 377 |
| 121263X | 95-031 | LG 377 |
| 121798X | 95-027 | LG 398 |
| 123431X | 95-031 | LG 377 |
| 126338X | 95-034 | LG 377 |
| 127841 | 595-613* | LG 463 |
| 127841 | 95-036 | LG 463 |
| 127841 | 95-613* | LG 463 |
| 127842 | 195-033 | LG 400 |
| 127842 | 595-601* | LG 400 |
| 127842 | 95-601* | LG 423 |
| 127843 | 195-032 | LG 425 |
| 127843 | 596-900* | LG 380 |
| 127843 | 96-900* | LG 526 |
| 129277 | 95-051 | LG 465 |
| 130652 | 95-006 | LG 397 |
| 130652MS | 95-006 | LG 397 |
| 131322 | 595-601* | LG 400 |
| 131322 | 95-047 | LG 378 |
| 131322 | 95-601* | LG 423 |
| 131323 | 195-032 | LG 425 |
| 131323 | 596-900* | LG 380 |
| 131323 | 96-900* | LG 526 |
| 131694 | 95-051 | LG 465 |
| 133128 | 195-005 | LG 373 |
| 133128 | 596-900* | LG 380 |
| 133128 | 96-900* | LG 526 |
| 133346 | 95-051 | LG 465 |
| 133348 | 195-021 | LG 468 |
| 133348 | 595-602* | LG 403 |
| 133348 | 95-602* | LG 403 |
| 134148 | 195-003 | LG 400 |
| 134148 | 595-601* | LG 400 |
| 134148 | 95-601* | LG 423 |
| 134148M | 195-003 | LG 400 |
| 134148M | 595-601* | LG 400 |
| 134148M | 95-601* | LG 423 |
| 134148X | 195-003 | LG 400 |
| 134148X | 595-601* | LG 400 |
| 134148X | 95-601* | LG 423 |
| 134149 | 195-005 | LG 373 |
| 134149 | 596-900* | LG 380 |
| 134149 | 96-900* | LG 526 |
| 134768 | 195-021 | LG 468 |
| 134768 | 595-602* | LG 403 |
| 134768 | 95-602* | LG 403 |
| 134871 | 95-051 | LG 465 |
| 136869 | 95-613* | LG 463 |
| 136969 | 595-613* | LG 463 |
| 136969 | 95-036 | LG 463 |
| 137380 | 595-609* | LG 461 |
| 137380 | 95-018 | LG 399 |
| 137380 | 95-609* | LG 376 |
| 138496 | 595-613* | LG 463 |
| 138496 | 95-036 | LG 463 |
| 138496 | 95-613* | LG 463 |
| 138497 | 195-003 | LG 400 |
| 138497 | 595-601* | LG 400 |
| 138497 | 95-601* | LG 423 |
| 138498 | 195-032 | LG 425 |
| 138498 | 596-900* | LG 380 |
| 138498 | 96-900* | LG 526 |
| 138791 | 195-032 | LG 425 |
| 138791 | 596-900* | LG 380 |
| 138791 | 96-900* | LG 526 |
| 138969 | 595-613* | LG 463 |
| 138969 | 95-036 | LG 463 |
| 138969 | 95-613* | LG 463 |
| 138971 | 195-032 | LG 425 |
| 138971 | 596-900* | LG 380 |
| 138971 | 96-900* | LG 526 |
| 139744MS | 195-003 | LG 400 |
| 139744MS | 595-601* | LG 400 |
| 139744MS | 95-601* | LG 423 |
| 139774 | 195-003 | LG 400 |
| 139774 | 595-601* | LG 400 |
| 139774 | 95-601* | LG 423 |
| 139775 | 195-019 | LG 466 |
| 139775 | 596-900* | LG 380 |
| 139775 | 96-900* | LG 526 |
| 140026 | 98-007 | LG 401 |
| 140026 | 98-102* | LG 410 |
| 141114 | 195-021 | LG 468 |
| 141114 | 595-602* | LG 403 |
| 141114 | 95-602* | LG 403 |
| 143969 | 95-034 | LG 377 |
| 143978X | 95-031 | LG 377 |
| 145106 | 95-051 | LG 465 |
| 145708 | 595-614* | LG 459 |
| 145708 | 95-045 | LG 374 |
| 145708 | 95-614* | LG 375 |
| 152443 | 595-614* | LG 459 |
| 152443 | 95-045 | LG 374 |
| 152443 | 95-614* | LG 375 |
| 157033 | 595-614* | LG 459 |
| 157033 | 95-052 | LG 398 |
| 157033 | 95-614* | LG 375 |
| 157101 | 195-021 | LG 468 |
| 157101 | 595-602* | LG 403 |
| 157101 | 95-602* | LG 403 |
| 159267 | 595-621* | LG 467 |
| 159267 | 95-071 | LG 402 |
| 159267 | 95-621* | LG 402 |
| 163819 | 595-614* | LG 459 |
| 163819 | 95-045 | LG 374 |
| 163819 | 95-614* | LG 375 |
| 170698 | 595-614* | LG 459 |
| 170698 | 95-052 | LG 398 |
| 170698 | 95-614* | LG 375 |
| 1736043AYP | 91-616 | LG 543 |
| 1736043AYP | 96-398* | LG 525 |
| 1736044AYP | 91-615 | LG 522 |
| 173920 | 195-062 | LG 376 |
| 173920 | 596-615* | LG 529 |
| 173920 | 96-615* | LG 461 |
| 173921 | 596-615* | LG 529 |
| 173921 | 95-068 | LG 376 |
| 173921 | 96-615* | LG 461 |
| 175064 | 595-621* | LG 467 |
| 175064 | 95-057 | LG 380 |
| 175064 | 95-621* | LG 402 |
| 176084 | 595-614* | LG 459 |
| 176084 | 95-052 | LG 398 |
| 176084 | 95-614* | LG 375 |
| 180054 | 195-062 | LG 376 |
| 180054 | 596-615* | LG 529 |
| 180054 | 96-615* | LG 461 |
| 187255 | 595-605* | LG 422 |
| 187255 | 95-082 | LG 372 |
| 187255 | 95-605* | LG 463 |
| 187256 | 195-072 | LG 530 |
| 187256 | 595-605* | LG 422 |
| 187256 | 95-605* | LG 463 |
| 189028 | 195-067 | LG 380 |
| 189028 | 595-621* | LG 467 |
| 189028 | 95-621* | LG 402 |
| 24676 | 195-005 | LG 373 |
| 24676 | 596-900* | LG 380 |
| 24676 | 96-900* | LG 526 |
| 24691 | 95-015 | LG 400 |
| 24692 | 195-003 | LG 400 |
| 24692 | 595-601* | LG 400 |
| 24692 | 95-601* | LG 423 |
| 25034 | 95-014 | LG 374 |
| 25034 | 95-607* | LG 397 |
| 25034R | 95-014 | LG 374 |
| 25034R | 95-607* | LG 397 |
| 25036 | 95-015 | LG 400 |
| 25036R | 95-015 | LG 400 |
| 25322 | 95-011 | |
| 25322R | 95-011 | |
| 25744 | 595-024* | LG 465 |
| 25744 | 95-041 | LG 401 |
| 33203 | 595-024* | LG 465 |
| 33203 | 95-024 | LG 465 |
| 33204 | 595-024* | LG 465 |
| 33204 | 95-024 | LG 465 |
| 33214 | 595-602* | LG 403 |
| 33214 | 95-023 | LG 380 |
| 33214 | 95-602* | LG 403 |
| 33219 | 595-602* | LG 403 |
| 33219 | 95-023 | LG 380 |
| 33219 | 95-602* | LG 403 |
| 402463 | 95-076 | LG 404 |
| 402463 | 95-615* | LG 426 |
| 406707 | 595-602* | LG 403 |
| 406707 | 95-073 | LG 533 |
| 406707 | 95-602* | LG 403 |
| 406712 | 595-621* | LG 467 |
| 406712 | 95-057 | LG 380 |
| 406712 | 95-621* | LG 402 |
| 406713 | 595-602* | LG 403 |
| 406713 | 95-023 | LG 380 |
| 406713 | 95-602* | LG 403 |
| 421825 | 95-076 | LG 404 |
| 421825 | 95-615* | LG 426 |
| 422719 | 195-005 | LG 373 |
| 422719 | 596-900* | LG 380 |
| 422719 | 96-900* | LG 526 |
| 424752 | 195-005 | LG 373 |
| 424752 | 596-900* | LG 380 |
| 424752 | 96-900* | LG 526 |
| 532106634 | 95-015 | LG 400 |
| 532121263 | 95-031 | LG 377 |
| 532130652 | 95-049 | LG 459 |
| 532134148 | 195-003 | LG 400 |
| 532134148 | 595-601* | LG 400 |
| 532134148 | 95-601* | LG 423 |
| 532139774 | 195-003 | LG 400 |
| 532139774 | 595-601* | LG 400 |
| 532139774 | 95-601* | LG 423 |
| 532143978 | 95-031 | LG 377 |
| 532406707 | 595-602* | LG 403 |
| 532406707 | 95-073 | LG 533 |
| 532406707 | 95-602* | LG 403 |
| 532406713 | 595-602* | LG 403 |
| 532406713 | 95-023 | LG 380 |
| 532406713 | 95-602* | LG 403 |
| 532752233 | 95-044 | LG 465 |
| 532752234 | 195-021 | LG 468 |
| 532752234 | 595-602* | LG 403 |
| 532752234 | 95-602* | LG 403 |
| 532850973 | 595-602* | LG 403 |
| 532850973 | 95-023 | LG 380 |

X



* OREGON® Gator™ replacement blade

| OEM No. | OREGON | Page |
|---|---|---|
| **CRAFTSMAN** | | |
| 532850973 | 95-602* | LG 403 |
| 56400 | 595-024* | LG 465 |
| 56400 | 95-024 | LG 465 |
| 580244001 | 95-615* | LG 426 |
| 580258101 | 595-621* | LG 467 |
| 580258101 | 95-621* | LG 402 |
| 580258102 | 595-621* | LG 467 |
| 580258102 | 95-621* | LG 402 |
| 582931401 | 595-602* | LG 403 |
| 582931401 | 95-073 | LG 533 |
| 582931401 | 95-602* | LG 403 |
| 585587701 | 95-615* | LG 426 |
| 69229 | 595-024* | LG 465 |
| 69229 | 95-024 | LG 465 |
| 700973 | 195-021 | LG 468 |
| 700973 | 595-602* | LG 403 |
| 700973 | 95-602* | LG 403 |
| 701213 | 595-602* | LG 403 |
| 701213 | 95-023 | LG 380 |
| 701213 | 95-602* | LG 403 |
| 7322H | 95-011 | |
| 742-04154 | 98-094 | LG 514 |
| 742-04154 | 98-671* | LG 514 |
| 742-04154A | 98-094 | LG 514 |
| 742-04154A | 98-671* | LG 514 |
| 752233 | 95-044 | LG 465 |
| 752234 | 195-021 | LG 468 |
| 752234 | 595-602* | LG 403 |
| 752234 | 95-602* | LG 403 |
| 80204 | 595-024* | LG 465 |
| 80204 | 95-024 | LG 465 |
| 8029 | 595-024* | LG 465 |
| 8029 | 95-024 | LG 465 |
| 850972 | 595-024* | LG 465 |
| 850972 | 95-024 | LG 465 |
| 850973 | 595-602* | LG 403 |
| 850973 | 95-023 | LG 380 |
| 850973 | 95-602* | LG 403 |
| 91333256 | 195-021 | LG 468 |
| 91333256 | 595-602* | LG 403 |
| 91333256 | 95-602* | LG 403 |
| 91333269 | 195-021 | LG 468 |
| 91333269 | 595-602* | LG 403 |
| 91333269 | 95-602* | LG 403 |
| 917532406707 | 595-602* | LG 403 |
| 917532406707 | 95-073 | LG 533 |
| 917532406707 | 95-602* | LG 403 |
| 942-04154 | 98-094 | LG 514 |
| 942-04154 | 98-671* | LG 514 |
| 942-04154A | 98-094 | LG 514 |
| 942-04154A | 98-671* | LG 514 |
| 942-04244A | 96-401* | LG 404 |
| 942-04244A | 98-096 | LG 404 |
| 942-04290 | 96-401* | LG 404 |
| 942-04290 | 98-096 | LG 404 |
| 942-04312 | 598-629* | LG 575 |
| 942-04312 | 98-629* | LG 412 |
| 942-04417 | 392-139* | LG 398 |
| 942-04417 | 92-139 | LG 398 |
| 942-0616A | 198-059 | LG 403 |
| 942-0616A | 598-629* | LG 575 |
| 942-0616A | 98-629* | LG 412 |
| 942-0741 | 198-049 | LG 518 |
| 942-0741 | 598-631* | LG 390 |
| 942-0741 | 98-631* | LG 390 |
| 942-0741A | 198-049 | LG 518 |
| 942-0741A | 598-631* | LG 390 |
| 942-0741A | 98-631* | LG 390 |
| 942-0741A-X | 598-631* | LG 390 |
| 942-0741A-X | 98-631* | LG 390 |
| 9485H | 95-011 | |
| 9497R | 95-011 | |
| STD325810 | 75-208 | LG 277 |

| OEM No. | OREGON | Page |
|---|---|---|
| **CRUSADER** | | |
| 754-0935 | 75-092 | LG 304 |
| 954-0935 | 75-092 | LG 304 |
| **CUB CADET** | | |
| 00030779 | 15-581 | LG 273 |
| 00030779 | 15-598 | LG 301 |
| 00030782 | 34-209 | LG 826 |
| 00050441 | 75-820 | LG 273 |
| 00050441P | 75-820 | LG 273 |
| 01000399 | 75-808 | LG 256 |
| 01001315 | 75-822 | LG 254 |
| 01001805 | 91-144 | LG 454 |
| 01001805 | 96-677* | LG 372 |
| 01002108P | 33-184 | LG 737 |
| 01002391 | 75-818 | LG 253 |
| 01002391P | 75-818 | LG 253 |
| 01002932 | 75-701 | LG 273 |
| 01003277 | 33-090 | LG 948 |
| 01003280 | 91-144 | LG 454 |
| 01003280 | 96-677* | LG 372 |
| 01003805 | 91-144 | LG 454 |
| 01003805 | 96-677* | LG 372 |
| 01003968 | 75-821 | LG 254 |
| 01004020 | 60-057 | LG 706 |
| 01004081 | 78-046 | LG 826 |
| 01004101 | 34-201 | LG 822 |
| 01004315 | 75-822 | LG 254 |
| 01004719 | 91-144 | LG 454 |
| 01004719 | 96-677* | LG 372 |
| 01004719P | 91-144 | LG 454 |
| 01004719P | 96-677* | LG 372 |
| 01004752 | 75-701 | LG 273 |
| 01005011 | 75-821 | LG 254 |
| 01005011P | 75-821 | LG 254 |
| 01005012 | 75-822 | LG 254 |
| 01005012P | 75-822 | LG 254 |
| 01005337P | 596-351* | LG 408 |
| 01005337P | 96-351* | LG 408 |
| 01005337P | 98-091 | LG 516 |
| 01005338 | 596-300* | LG 519 |
| 01005338 | 96-300* | LG 519 |
| 01005338 | 98-071 | LG 411 |
| 01005338P | 596-300* | LG 519 |
| 01005338P | 96-300* | LG 519 |
| 01005338P | 98-071 | LG 411 |
| 01005374 | 15-106 | LG 273 |
| 01005374P | 15-106 | LG 273 |
| 01005375 | 15-107 | LG 273 |
| 01005375P | 15-107 | LG 273 |
| 01005376 | 15-108 | LG 273 |
| 01005376P | 15-108 | LG 273 |
| 01005378 | 15-583 | LG 273 |
| 01005378P | 15-583 | LG 273 |
| 01007522 | 396-815* | LG 521 |
| 01008349 | 75-798 | LG 253 |
| 01008349P | 75-798 | LG 253 |
| 01008616 | 596-373* | LG 512 |
| 01008616 | 98-080 | LG 512 |
| 01009787 | 15-109 | LG 273 |
| 01009787P | 15-109 | LG 273 |
| 01010168 | 592-015* | LG 515 |
| 01010168 | 92-015 | LG 407 |
| 01010168-0637 | 592-015* | LG 515 |
| 01010168-0637 | 92-015 | LG 407 |
| 01010168-X | 592-015* | LG 515 |
| 01010168-X | 92-015 | LG 407 |
| 02000103 | 75-811 | LG 254 |
| 02000103P | 75-811 | LG 254 |
| 02000154 | 15-110 | LG 273 |
| 02000154P | 15-110 | LG 273 |
| 02000478 | 60-056 | LG 706 |
| 02002648 | 15-111 | LG 273 |
| 02002648P | 15-111 | LG 273 |
| 02003479P | 60-057 | LG 706 |

| OEM No. | OREGON | Page |
|---|---|---|
| 02003622 | 48-233 | LG 724 |
| 02005017X | 392-139* | LG 398 |
| 02005017X | 92-139 | LG 398 |
| 02005017-X | 392-139* | LG 398 |
| 02005018-X | 596-351* | LG 408 |
| 02005018-X | 96-351* | LG 408 |
| 02005019 | 596-300* | LG 519 |
| 02005019 | 96-300* | LG 519 |
| 02005019 | 98-071 | LG 411 |
| 02005019X | 596-300* | LG 519 |
| 02005019X | 96-300* | LG 519 |
| 02005019X | 98-071 | LG 411 |
| 02005019-X | 596-300* | LG 519 |
| 02005019-X | 96-300* | LG 519 |
| 02005020 | 596-373* | LG 512 |
| 02005020 | 98-080 | LG 512 |
| 02005020-0637 | 596-373* | LG 512 |
| 02005020-0637 | 98-080 | LG 512 |
| 1000399 | 75-808 | LG 256 |
| 1002391 | 75-818 | LG 253 |
| 1002932 | 75-701 | LG 273 |
| 1003277 | 33-090 | LG 948 |
| 1003968 | 75-821 | LG 254 |
| 1004020 | 60-057 | LG 706 |
| 1004081 | 78-046 | LG 826 |
| 1004081 | 78-110 | LG 833 |
| 1004101 | 34-201 | LG 822 |
| 1004315 | 75-822 | LG 254 |
| 1004719-0637 | 91-144 | LG 454 |
| 1004719-0637 | 96-677* | LG 372 |
| 1004752 | 75-701 | LG 273 |
| 1004772 | 96-381* | LG 406 |
| 1004772 | 98-081 | LG 406 |
| 1005011 | 75-821 | LG 254 |
| 1005012 | 75-822 | LG 254 |
| 1005336P | 392-139* | LG 398 |
| 1005336P | 92-139 | LG 398 |
| 1005337 | 596-351* | LG 408 |
| 1005337 | 96-351* | LG 408 |
| 1005337 | 98-091 | LG 516 |
| 1005374 | 15-106 | LG 273 |
| 1005375 | 15-107 | LG 273 |
| 1005376 | 15-108 | LG 273 |
| 1005378 | 15-583 | LG 273 |
| 1008349 | 75-798 | LG 253 |
| 1009787 | 15-109 | LG 273 |
| 117210C1 | 30-098 | LG 206 |
| 1185275 | 45-206 | LG 231 |
| 1185615 | 45-000 | LG 237 |
| 138412 | 33-116 | LG 735 |
| 1737180 | 45-206 | LG 231 |
| 1761083 | 33-019 | LG 948 |
| 1766087 | 72-308-1 | LG 1042 |
| 1767273 | 45-000 | LG 237 |
| 1810014 | 45-206 | LG 231 |
| 1H-545130-R92 | 33-320-0 | LG 731 |
| 2000103 | 75-811 | LG 254 |
| 2000154 | 15-110 | LG 273 |
| 2000478 | 60-056 | LG 706 |
| 2002648 | 15-111 | LG 273 |
| 2004447 | 34-201 | LG 822 |
| 2004558 | 34-209 | LG 826 |
| 2005017 | 392-139* | LG 398 |
| 2005017 | 92-139 | LG 398 |
| 2005018 | 596-351* | LG 408 |
| 2005018 | 96-351* | LG 408 |
| 2005018 | 98-091 | LG 516 |
| 2005077 | 78-046 | LG 826 |
| 30779 | 15-581 | LG 273 |
| 30779 | 15-598 | LG 301 |
| 30782 | 34-209 | LG 826 |
| 384881-R93 | 45-000 | LG 237 |
| 384881-R93 | 45-034 | LG 224 |
| 384881-R94 | 45-000 | LG 237 |
| 385163R2 | 30-081 | LG 205 |

| OEM No. | OREGON | Page |
|---|---|---|
| 385168R2 | 30-080 | LG 205 |
| 385168R2 | 30-819 | LG 205 |
| 395789-R2 | 83-300 | LG 819 |
| 465003R91 | 45-295 | LG 232 |
| 465003R-91 | 45-295 | LG 232 |
| 465003-R91 | 45-295 | LG 232 |
| 470880R91 | 45-295 | LG 232 |
| 470880R-91 | 45-295 | LG 232 |
| 470880-R91 | 45-295 | LG 232 |
| 488619 | 30-070 | LG 216 |
| 488619 | 30-822 | LG 216 |
| 488619R1 | 30-070 | LG 216 |
| 488619R1 | 30-822 | LG 216 |
| 490-100-C089 | 198-049 | LG 518 |
| 490-100-C089 | 598-631* | LG 390 |
| 490-100-C089 | 98-631* | LG 390 |
| 490-100-M084 | 198-049 | LG 518 |
| 490-100-M084 | 598-631* | LG 390 |
| 490-100-M084 | 98-631* | LG 390 |
| 490-110-C109 | 198-059 | LG 403 |
| 490-110-C109 | 598-629* | LG 575 |
| 490-110-C109 | 98-629* | LG 412 |
| 490-110-C119 | 98-090 | LG 519 |
| 490-110-C121 | 596-333* | LG 408 |
| 490-110-C121 | 91-440 | LG 408 |
| 490-110-C121 | 96-333* | LG 408 |
| 490-110-C122 | 198-059 | LG 403 |
| 490-110-C122 | 598-629* | LG 575 |
| 490-110-C122 | 98-629* | LG 412 |
| 490-110-C123 | 198-086 | LG 565 |
| 490-110-C123 | 591-938* | LG 407 |
| 490-110-C123 | 91-938* | LG 514 |
| 490-110-C129 | 591-635* | LG 411 |
| 490-110-C129 | 91-058 | LG 411 |
| 490-110-C129 | 91-635* | LG 411 |
| 490-110-C131 | 96-401* | LG 404 |
| 490-110-C131 | 98-096 | LG 404 |
| 490-110-M108 | 598-629* | LG 575 |
| 490-110-M108 | 98-093 | LG 411 |
| 490-110-M108 | 98-629* | LG 412 |
| 490-110-M115 | 198-059 | LG 403 |
| 490-110-M115 | 598-629* | LG 575 |
| 490-110-M115 | 98-629* | LG 412 |
| 490-110-M126 | 198-086 | LG 565 |
| 490-110-M126 | 591-938* | LG 407 |
| 490-110-M126 | 91-938* | LG 514 |
| 490-201-0002 | 83-300 | LG 819 |
| 491395R1 | 78-114 | LG 829 |
| 491395-R1 | 34-015 | LG 821 |
| 491395-R1 | 78-114 | LG 829 |
| 50441 | 75-820 | LG 273 |
| 50441P | 75-820 | LG 273 |
| 542520R91 | 34-019 | LG 821 |
| 545130R93 | 33-320-0 | LG 731 |
| 545130-R93 | 33-320-0 | LG 731 |
| 548436R1 | 30-082 | LG 205 |
| 61606C1 | 30-093 | LG 206 |
| 61606C1 | 30-812 | LG 206 |
| 617530 | 45-206 | LG 231 |
| 618-0282 | 73-827 | |
| 618-0282A | 73-827 | |
| 618-0282B | 73-827 | |
| 618-0282C | 73-827 | |
| 618-0282D | 73-827 | |
| 618-0282E | 73-827 | |
| 618-0324 | 82-405 | LG 878 |
| 618-0324A | 82-405 | LG 878 |
| 618-04123 | 82-401 | LG 879 |
| 618-04123B | 82-401 | LG 879 |
| 618-04124A | 82-402 | LG 879 |
| 618-04125 | 82-403 | LG 879 |
| 618-04125A | 82-403 | LG 879 |
| 618-04126 | 82-403 | LG 879 |
| 618-04126A | 82-403 | LG 879 |
| 618-04129 | 82-412 | LG 53 |

X

* OREGON® Gator™ replacement blade

# 2019 OEM X-Reference

| OEM No. | OREGON | Page |
|---|---|---|
| **CUB CADET** | | |
| 618-04129A | 82-412 | LG 53 |
| 618-04129B | 82-412 | LG 53 |
| 618-0427 | 82-405 | LG 878 |
| 618-0427A | 82-405 | LG 878 |
| 618-0427C | 82-405 | LG 878 |
| 618-04394 | 82-406 | LG 880 |
| 618-04394 | 82-412 | LG 53 |
| 618-04426 | 82-406 | LG 880 |
| 618-04456 | 82-407 | LG 880 |
| 618-04461 | 82-407 | LG 880 |
| 618-04822 | 82-058 | LG 898 |
| 618-04822A | 82-058 | LG 898 |
| 618-04825 | 82-043 | LG 899 |
| 618-04825B | 82-043 | LG 899 |
| 618-04889 | 82-058 | LG 898 |
| 618-04889A | 82-058 | LG 898 |
| 618-04950 | 82-058 | LG 898 |
| 618-05016 | 82-043 | LG 899 |
| 618-0595 | 82-518 | LG 897 |
| 618-0624 | 82-405 | LG 878 |
| 618-0624 | 82-408 | LG 878 |
| 618-0659 | 82-408 | LG 878 |
| 618-0660 | 82-409 | LG 878 |
| 618-0660A | 82-409 | LG 878 |
| 618-0660B | 82-409 | LG 878 |
| 618-3129 | 82-411 | LG 878 |
| 618-3129A | 82-411 | LG 878 |
| 618-3129B | 82-411 | LG 878 |
| 618-3129C | 82-411 | LG 878 |
| 618-3167 | 82-044 | LG 879 |
| 634-04188 | 72-308-1 | LG 1042 |
| 634-3159 | 72-026 | LG 1039 |
| 651814R1 | 45-205 | LG 228 |
| 651814R1 | 45-206 | LG 231 |
| 651814-R1 | 45-205 | LG 228 |
| 651814-R1 | 45-206 | LG 231 |
| 651815R91 | 45-205 | LG 228 |
| 651815R91 | 45-206 | LG 231 |
| 651815-R91 | 45-205 | LG 228 |
| 651815-R91 | 45-206 | LG 231 |
| 656-3045 | 34-066 | LG 832 |
| 684-04025 | 73-050 | LG 846 |
| 684-04025A | 73-050 | LG 846 |
| 684-04027 | 73-050 | LG 846 |
| 684-04027A | 73-050 | LG 846 |
| 700399 | 75-808 | LG 256 |
| 702391 | 75-818 | LG 253 |
| 703-1890 | 72-027 | LG 1039 |
| 703-1890A | 72-027 | LG 1039 |
| 704752 | 75-701 | LG 273 |
| 705011 | 75-821 | LG 254 |
| 705012 | 75-822 | LG 254 |
| 706-15686-00-11 | 73-050 | LG 846 |
| 708349 | 75-798 | LG 253 |
| 717-04080 | 33-126-1 | LG 736 |
| 717-04163 | 33-133 | LG 736 |
| 717-04163A | 33-133 | LG 736 |
| 717-04174 | 33-134 | LG 736 |
| 717-04174A | 33-134 | LG 736 |
| 717-04183 | 33-255 | LG 736 |
| 717-0949 | 33-110 | LG 735 |
| 717-1425 | 84-014 | LG 856 |
| 717-1434 | 33-110 | LG 735 |
| 717-1459 | 33-112 | LG 735 |
| 717-1708 | 33-125-1 | LG 736 |
| 717-1709 | 33-139 | LG 736 |
| 717-1774B | 33-104 | LG 735 |
| 717-1774C | 33-104 | LG 735 |
| 717-3390 | 33-185 | LG 737 |
| 717-3446 | 33-124 | LG 736 |
| 717-3446P | 33-124 | LG 736 |
| 718-04124A | 82-402 | LG 879 |
| 720103 | 75-811 | LG 254 |
| 723-3014 | 83-300 | LG 819 |
| 725-0268 | 33-240 | LG 948 |
| 725-04019 | 33-106 | LG 943 |
| 725-1657 | 33-084 | LG 948 |
| 7251657A | 33-084 | LG 948 |
| 725-1657A | 33-084 | LG 948 |
| 725-3164 | 33-026 | LG 947 |
| 725-3164A | 33-026 | LG 947 |
| 725-3164AP | 33-026 | LG 947 |
| 725-3166 | 33-019 | LG 948 |
| 725-3232 | 33-024 | LG 945 |
| 731-04869 | 73-833 | LG 855 |
| 731-04869A | 73-833 | LG 855 |
| 731-04894 | 73-831 | LG 856 |
| 731-04894A | 73-831 | LG 856 |
| 731-04894B | 73-831 | LG 856 |
| 731-04894C | 73-831 | LG 856 |
| 731-04894D | 73-831 | LG 856 |
| 731-04896 | 73-829 | LG 856 |
| 731-04896A | 73-829 | LG 856 |
| 731-04896B | 73-829 | LG 856 |
| 731-04913 | 73-828 | LG 856 |
| 731-05632 | 33-256 | LG 946 |
| 731-06451 | 73-830 | LG 856 |
| 731-0823 | 60-008 | LG 703 |
| 731-0851 | 73-832 | LG 855 |
| 731-0851A | 73-832 | LG 855 |
| 731-1313 | 73-834 | LG 856 |
| 731-1313A | 73-834 | LG 856 |
| 731-1313B | 73-834 | LG 856 |
| 731-1313C | 73-834 | LG 856 |
| 734-04039 | 72-015 | LG 1039 |
| 734-04039A | 72-015 | LG 1039 |
| 734-04155 | 72-025 | LG 1039 |
| 734-04223 | 72-078 | |
| 734-1608 | 72-054 | LG 1034 |
| 734-1656 | 72-054 | LG 1034 |
| 734-1781 | 72-054 | LG 1034 |
| 734-1782 | 72-054 | LG 1034 |
| 734-1855 | 72-054 | LG 1034 |
| 734-3058 | 72-308-1 | LG 1042 |
| 734-3058B | 72-015 | LG 1039 |
| 734-3058B | 72-308-1 | LG 1042 |
| 734-3063 | 72-308-1 | LG 1042 |
| 735-0243B | 76-075 | LG 727 |
| 741-0141 | 45-000 | LG 237 |
| 741-0170 | 45-278 | LG 240 |
| 741-04136 | 45-834 | LG 242 |
| 741-04136A | 45-834 | LG 242 |
| 741-04136B | 45-834 | LG 242 |
| 741-04298 | 45-206 | LG 231 |
| 741-0494 | 45-276 | LG 231 |
| 741-0563 | 45-130 | LG 232 |
| 741-0563 | 45-273 | |
| 741-0661 | 45-280 | LG 231 |
| 741-0661A | 45-280 | LG 231 |
| 741-0661B | 45-280 | LG 231 |
| 741-0662 | 45-281 | LG 240 |
| 741-0663 | 45-279 | LG 855 |
| 741-3028 | 45-206 | LG 231 |
| 741-3028P | 45-206 | LG 231 |
| 742-03002-0637 | 91-414 | LG 405 |
| 742-0321 | 91-057 | LG 409 |
| 742-0321 | 96-697* | LG 517 |
| 742-0322 | 91-057 | LG 409 |
| 742-0322 | 96-697* | LG 517 |
| 742-0323 | 98-044 | LG 409 |
| 742-04015 | 98-082 | LG 513 |
| 742-04016 | 98-083 | LG 404 |
| 742-04053 | 198-086 | LG 565 |
| 742-04053 | 591-938* | LG 407 |
| 742-04053 | 91-938* | LG 514 |
| 742-04053A | 198-086 | LG 565 |
| 742-04053A | 591-938* | LG 407 |
| 742-04053A | 91-938* | LG 514 |
| 742-04053B | 198-086 | LG 565 |
| 742-04053B | 591-938* | LG 407 |
| 742-04053B | 91-938* | LG 514 |
| 742-04053C | 198-086 | LG 565 |
| 742-04053C | 591-938* | LG 407 |
| 742-04053C | 91-938* | LG 514 |
| 742-04056 | 591-938* | LG 407 |
| 742-04056 | 91-938* | LG 514 |
| 742-04056 | 98-097 | LG 514 |
| 742-04056A | 591-938* | LG 407 |
| 742-04056A | 91-938* | LG 514 |
| 742-04056A | 98-097 | LG 514 |
| 742-04056A-0637 | 591-938* | LG 407 |
| 742-04056A-0637 | 91-938* | LG 514 |
| 742-04056A-0637 | 98-097 | LG 514 |
| 742-04056B | 591-938* | LG 407 |
| 742-04056B | 91-938* | LG 514 |
| 742-04056B | 98-097 | LG 514 |
| 742-04056B-0637 | 591-938* | LG 407 |
| 742-04056B-0637 | 91-938* | LG 514 |
| 742-04056B-0637 | 98-097 | LG 514 |
| 742-04056C | 591-938* | LG 407 |
| 742-04056C | 91-938* | LG 514 |
| 742-04056C | 98-097 | LG 514 |
| 742-04056C-0637 | 591-938* | LG 407 |
| 742-04056C-0637 | 91-938* | LG 514 |
| 742-04056C-0637 | 98-097 | LG 514 |
| 742-04068 | 596-387* | LG 407 |
| 742-04068 | 96-387* | LG 515 |
| 742-04068 | 98-087 | LG 407 |
| 742-04068C | 596-387* | LG 407 |
| 742-04068C | 96-387* | LG 515 |
| 742-04068C | 98-087 | LG 407 |
| 742-04087 | 198-153 | LG 520 |
| 742-04087 | 598-629* | LG 575 |
| 742-04087 | 98-629* | LG 412 |
| 742-04101 | 591-635* | LG 411 |
| 742-04101 | 91-058 | LG 411 |
| 742-04101 | 91-635* | LG 411 |
| 742-04124 | 98-084 | LG 512 |
| 742-04124 | 98-637* | LG 512 |
| 742-04124-X | 98-637* | LG 512 |
| 742-04125 | 598-640* | LG 405 |
| 742-04125 | 98-085 | LG 561 |
| 742-04125 | 98-640* | LG 574 |
| 742-04125-X | 598-640* | LG 405 |
| 742-04125-X | 98-640* | LG 574 |
| 742-04126 | 98-090 | LG 519 |
| 742-04154 | 98-094 | LG 514 |
| 742-04154 | 98-671* | LG 514 |
| 742-04154A | 98-094 | LG 514 |
| 742-04154A | 98-671* | LG 514 |
| 742-04244 | 96-401* | LG 404 |
| 742-04244 | 98-096 | LG 404 |
| 742-04244A | 96-401* | LG 404 |
| 742-04244A | 98-096 | LG 404 |
| 742-0424-X | 98-637* | LG 512 |
| 742-04276 | 198-049 | LG 518 |
| 742-04276 | 598-631* | LG 390 |
| 742-04276 | 98-631* | LG 390 |
| 742-04276S | 198-049 | LG 518 |
| 742-04276S | 598-631* | LG 390 |
| 742-04276S | 98-631* | LG 390 |
| 742-04290 | 96-401* | LG 404 |
| 742-04290 | 98-096 | LG 404 |
| 742-04290-X | 96-401* | LG 404 |
| 742-04308 | 598-629* | LG 575 |
| 742-04308 | 98-093 | LG 411 |
| 742-04308 | 98-629* | LG 412 |
| 742-04312 | 598-629* | LG 575 |
| 742-04312 | 98-629* | LG 412 |
| 742-04360 | 598-629* | LG 575 |
| 742-04360 | 98-629* | LG 412 |
| 742-04361 | 96-401* | LG 404 |
| 742-04374 | 96-350* | LG 412 |
| 742-04380 | 598-631* | LG 390 |
| 742-04380 | 98-631* | LG 390 |
| 742-04380-0684 | 598-631* | LG 390 |
| 742-04380-0684 | 98-631* | LG 390 |
| 742-04410 | 598-629* | LG 575 |
| 742-04410 | 98-629* | LG 412 |
| 742-04415 | 596-300* | LG 519 |
| 742-04415 | 96-300* | LG 519 |
| 742-04415 | 98-071 | LG 411 |
| 742-04415-X | 596-300* | LG 519 |
| 742-04415-X | 96-300* | LG 519 |
| 742-04415-XG | 596-300* | LG 519 |
| 742-04415-XG | 96-300* | LG 519 |
| 742-04416-X | 596-351* | LG 408 |
| 742-04416-X | 96-351* | LG 408 |
| 742-04417 | 392-139* | LG 398 |
| 742-04417 | 92-139 | LG 398 |
| 742-04417-X | 392-139* | LG 398 |
| 742-04418 | 396-815* | LG 521 |
| 742-04418-0637 | 396-815* | LG 521 |
| 742-0473 | 98-044 | LG 409 |
| 742-0473A | 98-044 | LG 409 |
| 742-0493 | 98-493 | LG 409 |
| 742-0504 | 98-044 | LG 409 |
| 742-0504A | 98-044 | LG 409 |
| 742-0536 | 98-007 | LG 401 |
| 742-0536 | 98-102* | LG 410 |
| 742-0537 | 98-537 | LG 516 |
| 742-0563 | 98-007 | LG 401 |
| 742-0563 | 98-102* | LG 410 |
| 7420616 | 198-059 | LG 403 |
| 7420616 | 598-629* | LG 575 |
| 7420616 | 98-629* | LG 412 |
| 742-0616 | 198-059 | LG 403 |
| 742-0616 | 598-629* | LG 575 |
| 742-0616 | 98-629* | LG 412 |
| 742-0616A | 198-059 | LG 403 |
| 742-0616A | 598-629* | LG 575 |
| 742-0616A | 98-629* | LG 412 |
| 742-0644 | 98-054 | LG 574 |
| 742-0644 | 98-634* | LG 405 |
| 742-0645 | 98-069 | LG 404 |
| 742-0645 | 98-670* | LG 512 |
| 742-0656 | 598-629* | LG 575 |
| 742-0656 | 98-093 | LG 411 |
| 742-0656 | 98-629* | LG 412 |
| 742-0677 | 398-672* | LG 515 |
| 742-0677 | 598-672* | LG 515 |
| 742-0677 | 98-072 | LG 408 |
| 742-0677 | 98-672* | LG 408 |
| 742-0677A | 398-672* | LG 515 |
| 742-0677A | 598-672* | LG 515 |
| 742-0677A | 98-072 | LG 408 |
| 742-0677A | 98-672* | LG 408 |
| 742-0677B | 398-672* | LG 515 |
| 742-0677B | 598-672* | LG 515 |
| 742-0677B | 98-072 | LG 408 |
| 742-0677B | 98-672* | LG 408 |
| 742-0721 | 98-007 | LG 401 |
| 742-0721 | 98-102* | LG 410 |
| 742-0739 | 92-140 | LG 516 |
| 742-0741 | 198-049 | LG 518 |
| 742-0741 | 598-631* | LG 390 |
| 742-0741 | 98-631* | LG 390 |
| 742-0741A | 198-049 | LG 518 |
| 742-0741A | 598-631* | LG 390 |
| 742-0741A | 98-631* | LG 390 |
| 742-0741A-X | 598-631* | LG 390 |
| 742-0741A-X | 98-631* | LG 390 |
| 742-0741-X | 598-631* | LG 390 |
| 742-0741-X | 98-631* | LG 390 |
| 742-3002 | 91-414 | LG 405 |
| 742-3003 | 90-656* | LG 406 |
| 742-3003 | 91-415 | LG 406 |
| 742-3008 | 96-697* | LG 517 |
| 742-3009 | 91-329 | LG 409 |

X



* OREGON® Gator™ replacement blade

## CUB CADET

| OEM No. | OREGON | Page |
|---|---|---|
| 742-3009 | 96-697* | LG 517 |
| 742-3010 | 91-327 | LG 404 |
| 742-3010-0637 | 91-327 | LG 404 |
| 742-3011 | 91-330 | LG 513 |
| 742-3011-0637 | 91-330 | LG 513 |
| 742-3013 | 596-333* | LG 408 |
| 742-3013 | 91-440 | LG 408 |
| 742-3013 | 96-333* | LG 408 |
| 742-3013-0637 | 596-333* | LG 408 |
| 742-3013-0637 | 91-440 | LG 408 |
| 742-3013-0637 | 96-333* | LG 408 |
| 742-3018 | 91-332 | LG 412 |
| 742-3018 | 96-350* | LG 412 |
| 742-3019 | 596-330* | LG 406 |
| 742-3019 | 90-697* | LG 406 |
| 742-3019 | 91-333 | LG 406 |
| 742-3025 | 596-330* | LG 406 |
| 742-3025 | 90-697* | LG 406 |
| 742-3025 | 91-056 | LG 406 |
| 742-3032 | 91-057 | LG 409 |
| 742-3032 | 96-697* | LG 517 |
| 742-3036 | 596-373* | LG 512 |
| 742-3036 | 91-073 | LG 512 |
| 742-3042 | 91-144 | LG 454 |
| 742-3042 | 96-677* | LG 372 |
| 743-04039 | 72-015 | LG 1039 |
| 746-04120 | 60-059 | LG 706 |
| 746-04120t | 60-059 | LG 706 |
| 746-04143 | 60-062 | LG 706 |
| 746-04173 | 60-527 | LG 714 |
| 746-04173A | 60-527 | LG 714 |
| 746-04173B | 60-527 | LG 714 |
| 746-04173C | 60-527 | LG 714 |
| 746-0418 | 60-014 | LG 712 |
| 746-0419 | 60-014 | LG 712 |
| 746-04206 | 60-528 | LG 708 |
| 746-04206A | 60-528 | LG 708 |
| 746-0421 | 60-014 | LG 712 |
| 746-04229 | 46-032 | LG 705 |
| 746-04229B | 46-032 | LG 705 |
| 746-04230 | 46-033 | LG 714 |
| 746-04230A | 46-033 | LG 714 |
| 746-04352 | 60-137 | LG 705 |
| 746-04352A | 60-137 | LG 705 |
| 746-04477 | 46-038 | LG 715 |
| 746-04528A | 46-039 | LG 705 |
| 746-04528B | 46-039 | LG 705 |
| 746-04556 | 60-140 | LG 715 |
| 746-04618A | 46-041 | LG 706 |
| 746-0472 | 60-012-0 | LG 712 |
| 746-0477 | 46-317 | LG 707 |
| 746-0477A | 46-317 | LG 707 |
| 746-0506 | 46-002 | LG 856 |
| 746-0550 | 46-320 | LG 707 |
| 746-0552 | 46-310 | LG 713 |
| 746-0553 | 46-321 | LG 707 |
| 746-0554 | 46-316 | LG 707 |
| 746-0573 | 46-002 | LG 856 |
| 746-0630 | 60-021 | LG 706 |
| 746-0630A | 60-021 | LG 706 |
| 746-0633 | 60-012-0 | LG 712 |
| 746-0634 | 60-014 | LG 712 |
| 746-0634A | 60-014 | LG 712 |
| 746-0635 | 60-014 | LG 712 |
| 746-0636 | 60-014 | LG 712 |
| 746-0641 | 60-014 | LG 712 |
| 746-0672 | 60-012-0 | LG 712 |
| 746-0674 | 60-012-0 | LG 712 |
| 746-0674A | 60-012-0 | LG 712 |
| 746-0713 | 46-004 | LG 707 |
| 746-0713A | 46-004 | LG 707 |
| 746-0777 | 60-014 | LG 712 |
| 746-0841 | 60-012-0 | LG 712 |
| 746-0875 | 60-005 | LG 704 |
| 746-0876 | 60-007 | LG 704 |
| 746-0897 | 46-044 | LG 710 |
| 746-0897A | 46-044 | LG 710 |
| 746-0898 | 46-006 | LG 712 |
| 746-0898A | 46-006 | LG 712 |
| 746-0898B | 46-006 | LG 712 |
| 746-0901 | 46-338 | LG 704 |
| 746-0902 | 46-046 | LG 704 |
| 746-0903 | 46-047 | LG 704 |
| 746-0910 | 46-005 | LG 707 |
| 746-0910A | 46-005 | LG 707 |
| 746-0912 | 60-045 | LG 707 |
| 746-0949 | 46-048 | LG 711 |
| 746-0949A | 46-048 | LG 711 |
| 746-0951 | 46-341 | LG 711 |
| 746-0951A | 46-341 | LG 711 |
| 746-0952 | 46-340 | LG 711 |
| 746-0956 | 46-049 | LG 705 |
| 746-0956A | 46-049 | LG 705 |
| 746-0956B | 46-049 | LG 705 |
| 746-0956C | 46-049 | LG 705 |
| 746-0970 | 46-050 | LG 711 |
| 746-1085 | 60-039 | LG 706 |
| 746-1085A | 60-039 | LG 706 |
| 746-1100 | 60-042 | LG 712 |
| 746-1130 | 46-051 | LG 712 |
| 751-10292 | 77-312-1 | LG 865 |
| 751-10298 | 30-828 | LG 194 |
| 751-10298 | 30-932 | LG 196 |
| 751-10630 | 33-256 | LG 946 |
| 751-10639 | 49-326 | LG 768 |
| 751-10639A | 49-326 | LG 768 |
| 751-10645 | 33-746 | LG 920 |
| 751-10645A | 33-746 | LG 920 |
| 751-11021 | 49-328 | LG 606 |
| 751-11021A | 49-328 | LG 606 |
| 751-11196 | 33-745 | LG 920 |
| 751-11219 | 49-331 | LG 604 |
| 751-11219A | 49-331 | LG 604 |
| 751-11332 | 49-329 | LG 604 |
| 751-11332A | 49-329 | LG 604 |
| 751-11355 | 49-327 | LG 606 |
| 751-11355A | 49-327 | LG 606 |
| 751-12760A | 49-329 | LG 604 |
| 751-12762A | 49-331 | LG 604 |
| 751-12788A | 49-328 | LG 606 |
| 751-14321 | 49-327 | LG 606 |
| 753-04856 | 72-308-1 | LG 1042 |
| 753-04856A | 72-015 | LG 1039 |
| 753-04856A | 72-308-1 | LG 1042 |
| 753-0626 | 73-058 | LG 848 |
| 754-0125 | 15-589 | LG 273 |
| 754-0125A | 15-589 | LG 273 |
| 754-0142 | 15-590 | LG 300 |
| 754-0178 | 75-179 | LG 310 |
| 754-0181 | 15-593 | LG 301 |
| 754-0197 | 75-079 | LG 301 |
| 754-0201 | 75-441 | LG 334 |
| 754-0240 | 75-009 | LG 301 |
| 754-0241 | 75-012 | LG 301 |
| 754-0241A | 75-012 | LG 301 |
| 754-0342 | 75-134 | LG 275 |
| 754-0349 | 75-021 | LG 274 |
| 754-0355 | 75-134 | LG 275 |
| 754-04014 | 15-604 | LG 275 |
| 754-04033 | 75-706 | LG 256 |
| 754-04033A | 75-706 | LG 256 |
| 754-04041 | 15-013 | LG 256 |
| 754-04043 | 75-886 | LG 276 |
| 754-04043A | 75-886 | LG 276 |
| 754-04043B | 75-886 | LG 276 |
| 754-04044 | 75-710 | LG 257 |
| 754-04044A | 75-710 | LG 257 |
| 754-04045 | 75-714 | LG 276 |
| 754-04048 | 75-716 | LG 276 |
| 754-04055 | 15-606 | LG 275 |
| 754-04057 | 75-012 | LG 301 |
| 754-04060 | 75-813 | LG 276 |
| 754-04060A | 75-813 | LG 276 |
| 754-04060B | 75-813 | LG 276 |
| 754-04062 | 75-600 | LG 276 |
| 754-04077 | 75-814 | LG 276 |
| 754-04077A | 75-814 | LG 276 |
| 754-04118 | 75-815 | LG 277 |
| 754-04122 | 15-025 | LG 255 |
| 754-04138 | 15-112 | LG 305 |
| 754-04138A | 15-112 | LG 305 |
| 754-04142 | 15-026 | LG 277 |
| 754-04153 | 75-816 | LG 257 |
| 754-04153A | 75-816 | LG 257 |
| 754-04207 | 15-613 | LG 305 |
| 754-04219 | 15-027 | LG 306 |
| 754-04240 | 15-028 | LG 277 |
| 754-0434 | 75-999 | LG 253 |
| 754-0438 | 15-616 | LG 303 |
| 754-0461 | 75-824 | LG 274 |
| 754-0483 | 15-619 | LG 274 |
| 754-0640 | 75-823 | LG 254 |
| 754-0641 | 15-623 | LG 274 |
| 754-0644 | 75-655 | LG 274 |
| 754-0645 | 75-656 | LG 274 |
| 754-0645A | 75-656 | LG 274 |
| 754-3001 | 15-588 | LG 275 |
| 754-3004 | 15-625 | LG 275 |
| 754-3038 | 75-658 | LG 275 |
| 754-3041 | 115-207 | LG 275 |
| 754-3045 | 15-627 | LG 275 |
| 754-3048 | 15-628 | LG 275 |
| 754-3053 | 15-629 | LG 304 |
| 754-3055 | 75-134 | LG 275 |
| 754-3055A | 75-134 | LG 275 |
| 754-3068 | 75-812 | LG 275 |
| 754-3073 | 75-569 | LG 335 |
| 754-3073 | 75-659 | LG 275 |
| 754-3084 | 115-208 | LG 275 |
| 756-0225 | 34-008 | LG 821 |
| 756-04216 | 34-065 | LG 837 |
| 756-04224 | 78-028 | LG 831 |
| 756-0515 | 34-015 | LG 821 |
| 756-0515 | 78-034 | LG 822 |
| 756-0542 | 34-205 | LG 826 |
| 756-0981 | 78-028 | LG 831 |
| 756-0981A | 78-028 | LG 831 |
| 756-0981B | 78-028 | LG 831 |
| 756-1229 | 78-046 | LG 826 |
| 756-3005 | 34-019 | LG 821 |
| 756-3045 | 34-066 | LG 832 |
| 756-3045A | 34-066 | LG 832 |
| 756-3062 | 34-206 | LG 826 |
| 759-04013 | 91-144 | LG 454 |
| 759-04013 | 96-677* | LG 372 |
| 759-04019 | 98-082 | LG 513 |
| 759-04020 | 98-083 | LG 404 |
| 759-04047 | 596-387* | LG 407 |
| 759-04047 | 96-387* | LG 515 |
| 759-04047 | 98-087 | LG 407 |
| 759-04081 | 591-635* | LG 411 |
| 759-04081 | 91-058 | LG 411 |
| 759-04081 | 91-635* | LG 411 |
| 759-3359 | 30-093 | LG 206 |
| 759-3359 | 30-812 | LG 206 |
| 759-3411 | 91-442 | LG 518 |
| 759-3547 | 30-098 | LG 206 |
| 759-3812 | 91-414 | LG 405 |
| 759-3813 | 90-656* | LG 406 |
| 759-3813 | 91-415 | LG 406 |
| 759-3816 | 96-697* | LG 517 |
| 759-3817 | 91-329 | LG 409 |
| 759-3817 | 96-697* | LG 517 |
| 759-3818 | 91-327 | LG 404 |
| 759-3819 | 91-330 | LG 513 |
| 759-3820 | 596-333* | LG 408 |
| 759-3820 | 91-440 | LG 408 |
| 759-3820 | 96-333* | LG 408 |
| 759-3824 | 91-332 | LG 412 |
| 759-3824 | 96-350* | LG 412 |
| 759-3825 | 596-330* | LG 406 |
| 759-3825 | 90-697* | LG 406 |
| 759-3825 | 91-333 | LG 406 |
| 759-3826 | 596-330* | LG 406 |
| 759-3826 | 90-697* | LG 406 |
| 759-3826 | 91-056 | LG 406 |
| 759-3829 | 91-057 | LG 409 |
| 759-3829 | 96-697* | LG 517 |
| 759-3830 | 591-635* | LG 411 |
| 759-3830 | 91-058 | LG 411 |
| 759-3830 | 91-635* | LG 411 |
| 759-3830-X | 591-635* | LG 411 |
| 759-3830-X | 91-635* | LG 411 |
| 759-3837 | 90-656* | LG 406 |
| 759-3837 | 91-415 | LG 406 |
| 759-3839 | 91-442 | LG 518 |
| 759-3857 | 596-333* | LG 408 |
| 759-3857 | 96-333* | LG 408 |
| 759-3929 | 596-373* | LG 512 |
| 759-3929 | 91-073 | LG 512 |
| 759-3939 | 596-373* | LG 512 |
| 759-3939 | 91-073 | LG 512 |
| 784-5485 | 73-050 | LG 846 |
| 784-5576 | 73-054 | LG 848 |
| 784-5579 | 73-058 | LG 848 |
| 784-5579A | 73-058 | LG 848 |
| 784-5580-0637 | 73-826 | |
| 784-5581A | 73-057 | LG 848 |
| 784-5582 | 73-055 | LG 848 |
| 784-5582A | 73-055 | LG 848 |
| 790-00117-0637 | 73-054 | LG 848 |
| 790-00118-0637 | 73-055 | LG 848 |
| 790-00119-0637 | 73-056 | LG 848 |
| 790-00120-0637 | 73-057 | LG 848 |
| 790-00121 | 73-058 | LG 848 |
| 790-00121-0637 | 73-058 | LG 848 |
| 790-00121-4021 | 73-058 | LG 848 |
| 811-00303 | 60-016 | LG 710 |
| 811-00500 | 60-016 | LG 710 |
| 811-0185 | 60-016 | LG 710 |
| 831-0798 | 60-008 | LG 703 |
| 831-0823A | 60-008 | LG 703 |
| 903-1890 | 72-027 | LG 1039 |
| 917-04080 | 33-126-1 | LG 736 |
| 917-04163A | 33-133 | LG 736 |
| 917-04174 | 33-134 | LG 736 |
| 917-04174A | 33-134 | LG 736 |
| 917-04183 | 33-255 | LG 736 |
| 917-041ZA | 33-134 | LG 736 |
| 917-04622 | 33-255 | LG 736 |
| 917-0949 | 33-110 | LG 735 |
| 917-1425 | 84-014 | LG 856 |
| 917-1434 | 33-110 | LG 735 |
| 917-1459 | 33-112 | LG 735 |
| 917-1708 | 33-125-1 | LG 736 |
| 917-1709 | 33-139 | LG 736 |
| 917-1774B | 33-104 | LG 735 |
| 917-1774C | 33-104 | LG 735 |
| 917-17774B | 33-104 | LG 735 |
| 917-3390 | 33-185 | LG 737 |
| 917-3446 | 33-124 | LG 736 |
| 918-0282D | 73-827 | |
| 918-0282E | 73-827 | |
| 918-0324 | 82-405 | LG 878 |
| 918-04123B | 82-401 | LG 879 |
| 918-04124A | 82-402 | LG 879 |
| 918-04125 | 82-403 | LG 879 |
| 918-04125A | 82-403 | LG 879 |
| 918-04125B | 82-403 | LG 879 |

X

* OREGON® Gator™ replacement blade

# 2019 OEM X-Reference

| OEM No. | OREGON | Page |
|---|---|---|
| **CUB CADET** | | |
| 918-04126 | 82-403 | LG 879 |
| 918-04126A | 82-403 | LG 879 |
| 918-04126B | 82-403 | LG 879 |
| 918-04129 | 82-412 | LG 53 |
| 918-04129A | 82-412 | LG 53 |
| 918-04129B | 82-411 | LG 878 |
| 918-04129B | 82-412 | LG 53 |
| 918-0427 | 82-405 | LG 878 |
| 918-0427A | 82-405 | LG 878 |
| 918-0427C | 82-405 | LG 878 |
| 918-04394 | 82-406 | LG 880 |
| 918-04394 | 82-411 | LG 878 |
| 918-04426 | 82-406 | LG 880 |
| 918-04456 | 82-407 | LG 880 |
| 918-04456A | 82-407 | LG 880 |
| 918-04461 | 82-407 | LG 880 |
| 918-04822 | 82-058 | LG 898 |
| 918-04822A | 82-058 | LG 898 |
| 918-04825 | 82-043 | LG 899 |
| 918-04825B | 82-043 | LG 899 |
| 918-04889 | 82-058 | LG 898 |
| 918-04889A | 82-058 | LG 898 |
| 918-04950 | 82-058 | LG 898 |
| 918-05016 | 82-043 | LG 899 |
| 918-0624 | 82-405 | LG 878 |
| 918-0624 | 82-408 | LG 878 |
| 918-0624A | 82-408 | LG 878 |
| 918-0659 | 82-408 | LG 878 |
| 918-0659A | 82-408 | LG 878 |
| 918-0660 | 82-409 | LG 878 |
| 918-0660A | 82-409 | LG 878 |
| 918-0660B | 82-409 | LG 878 |
| 918-3129 | 82-411 | LG 878 |
| 918-3129A | 82-411 | LG 878 |
| 918-3129B | 82-411 | LG 878 |
| 918-3129C | 82-411 | LG 878 |
| 918-3167 | 82-044 | LG 879 |
| 923-3014 | 83-300 | LG 819 |
| 925-0268 | 33-240 | LG 948 |
| 925-04019 | 33-106 | LG 943 |
| 925-1657A | 33-084 | LG 948 |
| 925-3164A | 33-026 | LG 947 |
| 925-3166 | 33-019 | LG 948 |
| 934-04223 | 72-078 | |
| 935-0243B | 76-075 | LG 727 |
| 941-0141 | 45-000 | LG 237 |
| 941-0170 | 45-278 | LG 240 |
| 941-04089 | 45-205 | LG 228 |
| 941-04089 | 45-206 | LG 231 |
| 941-04298 | 45-206 | LG 231 |
| 941-0475 | 45-833 | LG 855 |
| 941-0563 | 45-130 | LG 232 |
| 941-0563 | 45-273 | |
| 942-04053 | 198-086 | LG 565 |
| 942-04053 | 591-938* | LG 407 |
| 942-04053 | 91-938* | LG 514 |
| 942-04053A | 198-086 | LG 565 |
| 942-04053A | 591-938* | LG 407 |
| 942-04053A | 91-938* | LG 514 |
| 942-04053B | 198-086 | LG 565 |
| 942-04053B | 591-938* | LG 407 |
| 942-04053B | 91-938* | LG 514 |
| 942-04053C | 198-086 | LG 565 |
| 942-04053C | 591-938* | LG 407 |
| 942-04053C | 91-938* | LG 514 |
| 942-04053C-X | 591-938* | LG 407 |
| 942-04053C-X | 91-938* | LG 514 |
| 942-04053-X | 591-938* | LG 407 |
| 942-04053-X | 91-938* | LG 514 |
| 942-04056 | 591-938* | LG 407 |
| 942-04056 | 91-938* | LG 514 |
| 942-04056 | 98-097 | LG 514 |
| 942-04056A | 591-938* | LG 407 |
| 942-04056A | 91-938* | LG 514 |
| 942-04056A | 98-097 | LG 514 |
| 942-04087 | 198-153 | LG 520 |
| 942-04087 | 598-629* | LG 575 |
| 942-04087 | 98-629* | LG 412 |
| 942-04124 | 98-084 | LG 512 |
| 942-04124 | 98-637* | LG 512 |
| 942-04124-X | 98-637* | LG 512 |
| 942-04125 | 598-640* | LG 405 |
| 942-04125 | 98-085 | LG 561 |
| 942-04125 | 98-640* | LG 574 |
| 942-04125-X | 598-640* | LG 405 |
| 942-04125-X | 98-640* | LG 574 |
| 942-04126 | 98-090 | LG 519 |
| 942-04126-X | 598-629* | LG 575 |
| 942-04126-X | 98-629* | LG 412 |
| 942-04154 | 98-094 | LG 514 |
| 942-04154 | 98-671* | LG 514 |
| 94204154A | 98-094 | LG 514 |
| 94204154A | 98-671* | LG 514 |
| 942-04154A | 98-094 | LG 514 |
| 942-04154A | 98-671* | LG 514 |
| 942-04244 | 96-401* | LG 404 |
| 942-04244 | 98-096 | LG 404 |
| 94204244A | 96-401* | LG 404 |
| 94204244A | 98-096 | LG 404 |
| 942-04244A | 96-401* | LG 404 |
| 942-04244A | 98-096 | LG 404 |
| 942-04244A-X | 96-401* | LG 404 |
| 942-04244-X | 96-401* | LG 404 |
| 942-04276 | 198-049 | LG 518 |
| 942-04276 | 598-631* | LG 390 |
| 942-04276 | 98-631* | LG 390 |
| 94204290 | 96-401* | LG 404 |
| 94204290 | 98-096 | LG 404 |
| 942-04290 | 96-401* | LG 404 |
| 942-04290 | 98-096 | LG 404 |
| 94204290X | 96-401* | LG 404 |
| 94204290X | 98-096 | LG 404 |
| 94204308 | 198-059 | LG 403 |
| 94204308 | 198-153 | LG 520 |
| 94204308 | 598-629* | LG 575 |
| 94204308 | 98-093 | LG 411 |
| 94204308 | 98-629* | LG 412 |
| 942-04308 | 598-629* | LG 575 |
| 942-04308 | 98-093 | LG 411 |
| 942-04308 | 98-629* | LG 412 |
| 94204308X | 198-059 | LG 403 |
| 94204308X | 198-153 | LG 520 |
| 94204308X | 598-629* | LG 575 |
| 94204308X | 98-093 | LG 411 |
| 94204308X | 98-629* | LG 412 |
| 942-04308-X | 598-629* | LG 575 |
| 942-04308-X | 98-629* | LG 412 |
| 94204312 | 198-059 | LG 403 |
| 94204312 | 198-153 | LG 520 |
| 94204312 | 598-629* | LG 575 |
| 94204312 | 98-093 | LG 411 |
| 94204312 | 98-629* | LG 412 |
| 942-04312 | 598-629* | LG 575 |
| 942-04312 | 98-629* | LG 412 |
| 942-04312-X | 598-629* | LG 575 |
| 942-04312-X | 98-629* | LG 412 |
| 942-04360 | 598-629* | LG 575 |
| 942-04360 | 98-629* | LG 412 |
| 942-04360-0684 | 598-629* | LG 575 |
| 942-04360-0684 | 98-629* | LG 412 |
| 942-04361 | 96-401* | LG 404 |
| 942-04361-0684 | 96-401* | LG 404 |
| 942-04374 | 96-350* | LG 412 |
| 942-04380 | 598-631* | LG 390 |
| 942-04380 | 98-631* | LG 390 |
| 942-04380-0684 | 598-631* | LG 390 |
| 942-04380-0684 | 98-631* | LG 390 |
| 942-04410 | 598-629* | LG 575 |
| 942-04410 | 98-629* | LG 412 |
| 942-04410-0684 | 598-629* | LG 575 |
| 942-04410-0684 | 98-629* | LG 412 |
| 94204415 | 596-300* | LG 519 |
| 94204415 | 96-300* | LG 519 |
| 94204415 | 98-071 | LG 411 |
| 942-04415 | 596-300* | LG 519 |
| 942-04415 | 96-300* | LG 519 |
| 942-04415 | 98-071 | LG 411 |
| 942-04415-X | 596-300* | LG 519 |
| 942-04415-X | 96-300* | LG 519 |
| 942-04416 | 596-351* | LG 408 |
| 942-04416 | 96-351* | LG 408 |
| 942-04416 | 98-091 | LG 516 |
| 942-04416-X | 596-351* | LG 408 |
| 942-04416-X | 96-351* | LG 408 |
| 94204417 | 392-139* | LG 398 |
| 94204417 | 92-139 | LG 398 |
| 942-04417 | 392-139* | LG 398 |
| 942-04417 | 92-139 | LG 398 |
| 942-04417-X | 392-139* | LG 398 |
| 942-0473A | 91-057 | LG 409 |
| 942-0473A | 96-697* | LG 517 |
| 942-0504 | 98-044 | LG 409 |
| 942-0504A | 98-044 | LG 409 |
| 942-0611-X | 598-640* | LG 405 |
| 942-0611-X | 98-640* | LG 574 |
| 942-0612-X | 98-637* | LG 512 |
| 942-0616 | 198-059 | LG 403 |
| 942-0616 | 598-629* | LG 575 |
| 942-0616 | 98-629* | LG 412 |
| 942-0616A | 198-059 | LG 403 |
| 942-0616A | 598-629* | LG 575 |
| 942-0616A | 98-629* | LG 412 |
| 942-0616-X | 598-629* | LG 575 |
| 942-0616-X | 98-629* | LG 412 |
| 942-0644 | 98-054 | LG 574 |
| 942-0644 | 98-634* | LG 405 |
| 942-0645 | 98-069 | LG 404 |
| 942-0645 | 98-670* | LG 512 |
| 942-0656 | 598-629* | LG 575 |
| 942-0656 | 98-093 | LG 411 |
| 942-0656 | 98-629* | LG 412 |
| 942-0677B | 398-672* | LG 515 |
| 942-0677B | 598-672* | LG 515 |
| 942-0677B | 98-072 | LG 408 |
| 942-0677B | 98-672* | LG 408 |
| 942-0721 | 98-007 | LG 401 |
| 942-0721 | 98-102* | LG 410 |
| 942-0739 | 92-140 | LG 516 |
| 942-0740 | 98-066 | LG 409 |
| 942-0741 | 198-049 | LG 518 |
| 942-0741 | 598-631* | LG 390 |
| 942-0741 | 98-631* | LG 390 |
| 942-0741A | 198-049 | LG 518 |
| 942-0741A | 598-631* | LG 390 |
| 942-0741A | 98-631* | LG 390 |
| 942-0741A-X | 598-631* | LG 390 |
| 942-0741A-X | 98-631* | LG 390 |
| 9420741X | 198-049 | LG 518 |
| 9420741X | 598-631* | LG 390 |
| 9420741X | 98-098 | LG 410 |
| 9420741X | 98-631* | LG 390 |
| 942-0741-X | 598-631* | LG 390 |
| 942-0741-X | 98-631* | LG 390 |
| 946-04143 | 60-062 | LG 706 |
| 946-04173B | 60-527 | LG 714 |
| 946-04173C | 60-527 | LG 714 |
| 946-04206A | 60-528 | LG 708 |
| 946-04229 | 46-032 | LG 705 |
| 946-04229B | 46-032 | LG 705 |
| 946-04230 | 46-033 | LG 714 |
| 946-04230A | 46-033 | LG 714 |
| 946-04352 | 60-137 | LG 705 |
| 946-04352A | 60-137 | LG 705 |
| 946-04477 | 46-038 | LG 715 |
| 946-04477t | 46-038 | LG 715 |
| 946-04528A | 46-039 | LG 705 |
| 946-04528B | 46-039 | LG 705 |
| 946-04556 | 60-140 | LG 715 |
| 946-04618 | 46-041 | LG 706 |
| 946-04618A | 46-041 | LG 706 |
| 946-04618B | 46-041 | LG 706 |
| 946-04618C | 46-041 | LG 706 |
| 946-0477A | 46-317 | LG 707 |
| 946-0506 | 46-002 | LG 856 |
| 946-0550 | 46-320 | LG 707 |
| 946-0552 | 46-310 | LG 713 |
| 946-0553 | 46-321 | LG 707 |
| 946-0554 | 46-316 | LG 707 |
| 946-0630A | 60-021 | LG 706 |
| 946-0634 | 60-014 | LG 712 |
| 946-0674A | 60-012-0 | LG 712 |
| 946-0875 | 60-005 | LG 704 |
| 946-0876 | 60-007 | LG 704 |
| 946-0897 | 46-044 | LG 710 |
| 946-0897A | 46-044 | LG 710 |
| 946-0898 | 46-006 | LG 712 |
| 946-0898B | 46-006 | LG 712 |
| 946-0901 | 46-338 | LG 704 |
| 946-0902 | 46-046 | LG 704 |
| 946-0903 | 46-047 | LG 704 |
| 946-0910A | 46-005 | LG 707 |
| 946-0951A | 46-341 | LG 711 |
| 946-0956B | 46-049 | LG 705 |
| 946-0956C | 46-049 | LG 705 |
| 946-1085A | 60-039 | LG 706 |
| 946-1100 | 60-042 | LG 712 |
| 946-1130 | 46-051 | LG 712 |
| 951-10630 | 33-256 | LG 946 |
| 951-10639 | 49-326 | LG 768 |
| 951-10639A | 49-326 | LG 768 |
| 951-10645 | 33-746 | LG 920 |
| 951-10645A | 33-746 | LG 920 |
| 951-11021 | 49-328 | LG 606 |
| 951-11021A | 49-328 | LG 606 |
| 951-11196 | 33-745 | LG 920 |
| 951-11219 | 49-331 | LG 604 |
| 951-11219A | 49-331 | LG 604 |
| 951-11332 | 49-329 | LG 604 |
| 951-11332A | 49-329 | LG 604 |
| 951-11355 | 49-327 | LG 606 |
| 951-11355A | 49-327 | LG 606 |
| 951-12760A | 49-329 | LG 604 |
| 951-12762A | 49-331 | LG 604 |
| 951-12788A | 49-328 | LG 606 |
| 951-14231 | 49-327 | LG 606 |
| 954-0125 | 15-589 | LG 273 |
| 954-0125A | 15-589 | LG 273 |
| 954-0142 | 15-590 | LG 300 |
| 954-0178 | 75-179 | LG 310 |
| 954-0181 | 15-593 | LG 301 |
| 954-0190 | 15-594 | LG 274 |
| 954-0197 | 75-079 | LG 301 |
| 954-0201 | 75-441 | LG 334 |
| 954-0218 | 15-595 | LG 274 |
| 954-0240 | 75-009 | LG 301 |
| 954-0241A | 75-012 | LG 301 |
| 954-0325 | 15-601 | LG 274 |
| 954-0349 | 75-021 | LG 274 |
| 954-0355 | 75-134 | LG 275 |
| 95404003A | 15-602 | LG 304 |
| 954-04013 | 15-603 | LG 304 |
| 954-04014 | 15-604 | LG 275 |
| 954-04032B | 75-249 | LG 305 |
| 954-04033 | 175-706 | LG 276 |
| 954-04033 | 75-706 | LG 256 |
| 954-04033A | 75-706 | LG 256 |
| 954-04041 | 15-013 | LG 256 |
| 954-04043 | 75-886 | LG 276 |
| 954-04043A | 75-886 | LG 276 |

X



* OREGON® Gator™ replacement blade

## CUB CADET

| OEM No. | OREGON | Page |
|---|---|---|
| 954-04043B | 75-886 | LG 276 |
| 954-04044 | 175-710 | LG 276 |
| 954-04044 | 75-710 | LG 257 |
| 954-04044A | 75-710 | LG 257 |
| 954-04045 | 175-714 | LG 276 |
| 954-04045 | 75-714 | LG 276 |
| 954-04047 | 15-605 | LG 275 |
| 954-04048 | 75-716 | LG 276 |
| 954-04055 | 15-606 | LG 275 |
| 954-04057 | 75-012 | LG 301 |
| 954-04060 | 75-813 | LG 276 |
| 954-04060A | 75-813 | LG 276 |
| 954-04060B | 175-813 | LG 276 |
| 954-04060B | 75-813 | LG 276 |
| 954-04062 | 75-600 | LG 276 |
| 954-04077 | 175-814 | LG 276 |
| 954-04077 | 75-814 | LG 276 |
| 954-04077A | 75-814 | LG 276 |
| 954-04100 | 15-609 | LG 305 |
| 954-04118 | 175-815 | LG 277 |
| 954-04118 | 75-815 | LG 277 |
| 954-04122 | 15-025 | LG 255 |
| 954-04137A | 15-605 | LG 275 |
| 954-04138 | 15-112 | LG 305 |
| 954-04138A | 15-112 | LG 305 |
| 954-04142 | 15-026 | LG 277 |
| 954-04153 | 75-816 | LG 257 |
| 954-04153A | 75-816 | LG 257 |
| 954-04207 | 15-613 | LG 305 |
| 954-04219 | 15-027 | LG 306 |
| 954-04240 | 15-028 | LG 277 |
| 954-0434 | 75-999 | LG 253 |
| 954-0438 | 15-616 | LG 303 |
| 954-0461 | 175-824 | LG 274 |
| 954-0461 | 75-824 | LG 274 |
| 954-0483 | 15-619 | LG 274 |
| 954-0640 | 75-823 | LG 254 |
| 954-0641 | 15-623 | LG 274 |
| 954-0644 | 75-655 | LG 274 |
| 954-0645 | 75-656 | LG 274 |
| 954-0645A | 75-656 | LG 274 |
| 954-3001 | 15-588 | LG 275 |
| 954-3004 | 15-625 | LG 275 |
| 954-3038 | 75-658 | LG 275 |
| 954-3041 | 115-207 | LG 275 |
| 954-3045 | 15-627 | LG 275 |
| 954-3048 | 15-628 | LG 275 |
| 954-3053 | 15-629 | LG 304 |
| 954-3055A | 75-134 | LG 275 |
| 954-3068 | 75-812 | LG 275 |
| 954-3073 | 75-659 | LG 275 |
| 954-3084 | 115-208 | LG 275 |
| 956-04216 | 34-065 | LG 837 |
| 956-04224 | 78-028 | LG 831 |
| 956-0981 | 78-028 | LG 831 |
| 956-0981B | 78-028 | LG 831 |
| 956-3045 | 34-066 | LG 832 |
| 956-3045A | 34-066 | LG 832 |
| 984-04027 | 73-050 | LG 846 |
| 984-04027A | 73-050 | LG 846 |
| 984-5485 | 73-050 | LG 846 |
| CC-742-0741 | 198-049 | LG 518 |
| CC-742-0741 | 598-631* | LG 390 |
| CC-742-0741 | 98-631* | LG 390 |
| CC-742-3033 | 591-635* | LG 411 |
| CC-742-3033 | 91-058 | LG 411 |
| CC-742-3033 | 91-635* | LG 411 |
| GW-1185616 | 45-000 | LG 237 |
| GW-1761083 | 33-019 | LG 948 |
| GW-1767273 | 45-000 | LG 237 |
| GW-1772388 | 33-112 | LG 735 |
| GW-7251657A | 33-084 | LG 948 |
| GW-7420616 | 198-059 | LG 403 |
| GW-7420616 | 598-629* | LG 575 |
| GW-7420616 | 98-629* | LG 412 |
| GW-9401 | 45-206 | LG 231 |
| GW-B1185275 | 45-206 | LG 231 |
| GW-B1185615 | 45-000 | LG 237 |
| GW-B1185616 | 45-000 | LG 237 |
| HR-542520-R1 | 34-019 | LG 821 |
| IH-384881-R1 | 45-000 | LG 237 |
| IH-384881-R1 | 45-034 | LG 224 |
| IH-384881-R93 | 45-000 | LG 237 |
| IH-384881-R93 | 45-034 | LG 224 |
| IH-384881-R94 | 45-000 | LG 237 |
| IH-384881-R94 | 45-034 | LG 224 |
| IH-385168-R2 | 30-080 | LG 205 |
| IH-395789-R2 | 83-300 | LG 819 |
| IH-465003-R91 | 45-295 | LG 232 |
| IH-470880-R91 | 45-295 | LG 232 |
| IH-470880-R92 | 45-295 | LG 232 |
| IH-488619-R1 | 30-070 | LG 216 |
| IH-488619-R1 | 30-822 | LG 216 |
| IH-545130-R93 | 33-320-0 | LG 731 |
| IH-59701-C1 | 15-625 | LG 275 |
| IH-59704-C1 | 91-414 | LG 405 |
| IH-61104-C1 | 90-656* | LG 406 |
| IH-61104-C1 | 91-415 | LG 406 |
| IH-651814-R1 | 45-205 | LG 228 |
| IH-651814-R1 | 45-206 | LG 231 |
| IH-651815-R91 | 45-205 | LG 228 |
| IH-651815-R91 | 45-206 | LG 231 |
| IH-83614-C1 | 91-442 | LG 518 |
| OCC-01004719 | 91-144 | LG 454 |
| OCC-01004719 | 96-677* | LG 372 |
| OCC-01010168 | 592-015* | LG 515 |
| OCC-01010168 | 92-015 | LG 407 |
| OCC-742-04053 | 198-086 | LG 565 |
| OCC-742-04053 | 591-938* | LG 407 |
| OCC-742-04053 | 91-938* | LG 514 |
| OCC-742-04068 | 596-387* | LG 407 |
| OCC-742-04068 | 96-387* | LG 515 |
| OCC-742-04068 | 98-087 | LG 407 |
| OCC-742-04101 | 591-635* | LG 411 |
| OCC-742-04101 | 91-058 | LG 411 |
| OCC-742-04101 | 91-635* | LG 411 |
| OCC-742-04126 | 98-090 | LG 519 |
| OCC-742-04154 | 98-094 | LG 514 |
| OCC-742-04154 | 98-671* | LG 514 |
| OCC-742-04244 | 96-401* | LG 404 |
| OCC-742-04244 | 98-096 | LG 404 |
| OCC-742-04312 | 598-629* | LG 575 |
| OCC-742-04312 | 98-093 | LG 411 |
| OCC-742-04312 | 98-629* | LG 412 |
| OCC-742-0616 | 198-059 | LG 403 |
| OCC-742-0616 | 598-629* | LG 575 |
| OCC-742-0616 | 98-629* | LG 412 |
| OCC-742-0677 | 398-672* | LG 515 |
| OCC-742-0677 | 598-672* | LG 515 |
| OCC-742-0677 | 98-072 | LG 408 |
| OCC-742-0677 | 98-672* | LG 408 |
| OCC-742-0739 | 92-140 | LG 516 |
| OCC-742-3013 | 596-333* | LG 408 |
| OCC-742-3013 | 91-440 | LG 408 |
| OCC-742-3013 | 96-333* | LG 408 |
| OCC-742-3019 | 596-330* | LG 406 |
| OCC-742-3019 | 90-697* | LG 406 |
| OCC-742-3019 | 91-333 | LG 406 |
| OCC-742-3036 | 596-373* | LG 512 |
| OCC-742-3036 | 91-073 | LG 512 |
| OCC-754-04207 | 15-613 | LG 305 |
| OCC-754-04219 | 15-027 | LG 306 |
| OCC-754-04240 | 15-028 | LG 277 |
| OEM-742-04053 | 198-086 | LG 565 |
| OEM-742-04053 | 591-938* | LG 407 |
| OEM-742-04053 | 91-938* | LG 514 |
| OEM-742-04308 | 598-629* | LG 575 |
| OEM-742-04308 | 98-093 | LG 411 |
| OEM-742-04308 | 98-629* | LG 412 |
| OEM-742-0473 | 98-044 | LG 409 |
| OEM-742-0473A | 98-044 | LG 409 |
| OEM-742-0616 | 198-059 | LG 403 |
| OEM-742-0616 | 598-629* | LG 575 |
| OEM-742-0616 | 98-629* | LG 412 |
| OEM-742-0641 | 598-631* | LG 390 |
| OEM-742-0641 | 98-098 | LG 410 |
| OEM-742-0641 | 98-631* | LG 390 |
| OEM-742-0677 | 398-672* | LG 515 |
| OEM-742-0677 | 598-672* | LG 515 |
| OEM-742-0677 | 98-072 | LG 408 |
| OEM-742-0677 | 98-672* | LG 408 |
| OEM-742-0721 | 98-007 | LG 401 |
| OEM-742-0721 | 98-102* | LG 410 |
| OEM-742-0741 | 198-049 | LG 518 |
| OEM-742-0741 | 598-631* | LG 390 |
| OEM-742-0741 | 98-631* | LG 390 |
| OEM-754-0142 | 15-590 | LG 300 |
| OEM-754-0197 | 75-079 | LG 301 |
| OEM-754-04014 | 15-604 | LG 275 |
| OEM-754-0438 | 15-616 | LG 303 |
| OEM-754-0483 | 15-619 | LG 274 |
| ST207 | 45-259 | LG 224 |
| TC30727 | 30-070 | LG 216 |
| TC30727 | 30-822 | LG 216 |
| WD-C38410 | 33-113 | LG 740 |
| YS-756-3062 | 34-206 | LG 826 |

## CURTIS

| | | |
|---|---|---|
| 58237 | 49-834 | LG 611 |
| 58238 | 49-810 | LG 612 |
| 58243-21 | 49-021 | LG 629 |

## CUSHMAN

| | | |
|---|---|---|
| 111836 | 83-300 | LG 819 |
| 825619 | 07-112 | LG 774 |
| 833438 | 83-282 | LG 817 |
| 833438 | 83-402 | LG 817 |
| 834702 | 83-011 | LG 819 |

## DAYCO

| | | |
|---|---|---|
| L320 | 75-320 | LG 334 |
| L321 | 75-321 | LG 334 |
| L322 | 75-322 | LG 334 |
| L323 | 75-323 | LG 334 |
| L324 | 75-324 | LG 334 |
| L325 | 75-325 | LG 334 |
| L326 | 75-326 | LG 334 |
| L327 | 75-327 | LG 334 |
| L328 | 75-328 | LG 334 |
| L329 | 75-329 | LG 334 |
| L330 | 75-330 | LG 334 |
| L331 | 75-331 | LG 334 |
| L332 | 75-332 | LG 334 |
| L333 | 75-333 | LG 334 |
| L334 | 75-334 | LG 334 |
| L335 | 75-335 | LG 334 |
| L336 | 75-336 | LG 334 |
| L337 | 75-337 | LG 334 |
| L338 | 75-338 | LG 334 |
| L339 | 75-339 | LG 334 |
| L340 | 75-340 | LG 334 |
| L341 | 75-341 | LG 334 |
| L342 | 75-342 | LG 334 |
| L343 | 75-343 | LG 334 |
| L344 | 75-344 | LG 334 |
| L345 | 75-345 | LG 334 |
| L346 | 75-346 | LG 334 |
| L348 | 75-348 | LG 334 |
| L349 | 75-349 | LG 334 |
| L350 | 75-350 | LG 334 |
| L4100 | 75-400 | LG 335 |
| L420 | 75-420 | LG 334 |
| L421 | 75-421 | LG 334 |
| L422 | 75-422 | LG 334 |
| L423 | 75-423 | LG 334 |
| L424 | 75-424 | LG 334 |
| L425 | 75-425 | LG 334 |
| L426 | 75-426 | LG 334 |
| L427 | 75-427 | LG 334 |
| L428 | 75-428 | LG 334 |
| L429 | 75-429 | LG 334 |
| L431 | 75-431 | LG 334 |
| L432 | 75-432 | LG 334 |
| L433 | 75-433 | LG 334 |
| L434 | 75-434 | LG 334 |
| L435 | 75-435 | LG 334 |
| L436 | 75-436 | LG 334 |
| L437 | 75-437 | LG 334 |
| L438 | 75-438 | LG 334 |
| L439 | 75-439 | LG 334 |
| L440 | 75-440 | LG 334 |
| L441 | 75-441 | LG 334 |
| L442 | 75-442 | LG 334 |
| L443 | 75-443 | LG 334 |
| L444 | 75-444 | LG 334 |
| L445 | 75-445 | LG 334 |
| L446 | 75-446 | LG 334 |
| L447 | 75-447 | LG 334 |
| L448 | 75-448 | LG 334 |
| L449 | 75-449 | LG 334 |
| L450 | 75-450 | LG 334 |
| L451 | 75-451 | LG 334 |
| L452 | 75-452 | LG 334 |
| L453 | 75-453 | LG 334 |
| L454 | 75-454 | LG 334 |
| L455 | 75-455 | LG 334 |
| L456 | 75-456 | LG 334 |
| L457 | 75-457 | LG 334 |
| L458 | 75-458 | LG 334 |
| L459 | 75-459 | LG 334 |
| L460 | 75-460 | LG 334 |
| L461 | 75-461 | LG 334 |
| L462 | 75-462 | LG 334 |
| L463 | 75-463 | LG 334 |
| L464 | 75-464 | LG 334 |
| L465 | 75-465 | LG 334 |
| L466 | 75-466 | LG 334 |
| L467 | 75-467 | LG 334 |
| L468 | 75-468 | LG 334 |
| L469 | 75-469 | LG 335 |
| L470 | 75-470 | LG 335 |
| L471 | 75-471 | LG 335 |
| L472 | 75-472 | LG 335 |
| L473 | 75-473 | LG 335 |
| L474 | 75-474 | LG 335 |
| L475 | 75-475 | LG 335 |
| L476 | 75-476 | LG 335 |
| L477 | 75-477 | LG 335 |
| L478 | 75-478 | LG 335 |
| L479 | 75-479 | LG 335 |
| L480 | 75-480 | LG 335 |
| L481 | 75-481 | LG 335 |
| L482 | 75-482 | LG 335 |
| L483 | 75-483 | LG 335 |
| L484 | 75-484 | LG 335 |
| L485 | 75-485 | LG 335 |
| L486 | 75-486 | LG 335 |
| L487 | 75-487 | LG 335 |
| L488 | 75-488 | LG 335 |
| L489 | 75-489 | LG 335 |
| L490 | 75-490 | LG 335 |
| L491 | 75-491 | LG 335 |
| L492 | 75-492 | LG 335 |
| L493 | 75-493 | LG 335 |
| L494 | 75-494 | LG 335 |
| L495 | 75-495 | LG 335 |
| L496 | 75-496 | LG 335 |
| L497 | 75-497 | LG 335 |
| L498 | 75-498 | LG 335 |

X

# 2019 OEM X-Reference

| OEM No. | OREGON | Page |
|---|---|---|
| **DAYCO** | | |
| L499 | 75-499 | LG 335 |
| L5100 | 75-500 | LG 335 |
| L527 | 75-527 | LG 334 |
| L528 | 75-528 | LG 334 |
| L529 | 75-529 | LG 334 |
| L530 | 75-530 | LG 334 |
| L531 | 75-531 | LG 334 |
| L532 | 75-532 | LG 334 |
| L533 | 75-533 | LG 334 |
| L534 | 75-534 | LG 334 |
| L535 | 75-535 | LG 334 |
| L536 | 75-536 | LG 334 |
| L537 | 75-537 | LG 334 |
| L538 | 75-538 | LG 334 |
| L539 | 75-539 | LG 334 |
| L540 | 75-540 | LG 334 |
| L541 | 75-541 | LG 334 |
| L542 | 75-542 | LG 334 |
| L543 | 75-543 | LG 334 |
| L544 | 75-544 | LG 334 |
| L545 | 75-545 | LG 334 |
| L546 | 75-546 | LG 334 |
| L547 | 75-547 | LG 334 |
| L548 | 75-548 | LG 334 |
| L549 | 75-549 | LG 334 |
| L550 | 75-550 | LG 334 |
| L551 | 75-551 | LG 334 |
| L552 | 75-552 | LG 334 |
| L553 | 75-553 | LG 334 |
| L554 | 75-554 | LG 334 |
| L555 | 75-555 | LG 334 |
| L556 | 75-556 | LG 334 |
| L557 | 75-557 | LG 334 |
| L558 | 75-558 | LG 253 |
| L559 | 75-559 | LG 334 |
| L560 | 75-560 | LG 334 |
| L561 | 75-561 | LG 334 |
| L562 | 75-562 | LG 334 |
| L563 | 75-563 | LG 253 |
| L564 | 75-564 | LG 334 |
| L565 | 75-565 | LG 253 |
| L566 | 75-566 | LG 334 |
| L567 | 75-567 | LG 334 |
| L568 | 75-568 | LG 334 |
| L569 | 75-569 | LG 335 |
| L570 | 75-570 | LG 335 |
| L571 | 75-571 | LG 335 |
| L572 | 75-572 | LG 335 |
| L573 | 75-573 | LG 335 |
| L574 | 75-574 | LG 335 |
| L575 | 75-575 | LG 335 |
| L576 | 75-576 | LG 335 |
| L577 | 75-577 | LG 335 |
| L578 | 75-578 | LG 335 |
| L579 | 75-579 | LG 335 |
| L580 | 75-580 | LG 335 |
| L581 | 75-208 | LG 277 |
| L581 | 75-581 | LG 335 |
| L582 | 75-582 | LG 254 |
| L583 | 75-583 | LG 335 |
| L584 | 75-584 | LG 335 |
| L585 | 75-585 | LG 335 |
| L586 | 75-586 | LG 335 |
| L587 | 75-587 | LG 335 |
| L588 | 75-588 | LG 335 |
| L589 | 75-589 | LG 335 |
| L590 | 75-590 | LG 335 |
| L591 | 75-591 | LG 335 |
| L592 | 75-592 | LG 335 |
| L593 | 75-593 | LG 335 |
| L594 | 75-594 | LG 335 |
| L595 | 75-595 | LG 335 |
| L596 | 75-596 | LG 335 |
| L597 | 75-597 | LG 335 |
| L598 | 75-598 | LG 335 |
| L599 | 75-599 | LG 335 |
| **DEAN PHIPPS AUTO STOR** | | |
| 754-0935 | 75-092 | LG 304 |
| 954-0935 | 75-092 | LG 304 |
| **DEINES** | | |
| 700136 | 75-072 | LG 268 |
| **DELCO** | | |
| 1118988 | 33-320-0 | LG 731 |
| **DESA/REMINGTON** | | |
| 66841 | 49-021 | LG 629 |
| 66844 | 49-816 | LG 612 |
| 69018 | 49-816 | LG 612 |
| **DEVERE** | | |
| 4195 | 75-120 | LG 300 |
| **DEWEZE** | | |
| 520403 | 83-011 | LG 819 |
| **DIXIE CHOPPER** | | |
| 10161 | 82-322 | LG 883 |
| 10161-HD | 82-322 | LG 883 |
| 10161-L | 82-323 | LG 883 |
| 10161-LHD | 82-323 | LG 883 |
| 10205 | 45-047 | LG 241 |
| 10205 | 45-258 | LG 224 |
| 10214-RB/2 | 70-363 | LG 963 |
| 1057718 | 91-503 | LG 424 |
| 1057718 | 91-506 | LG 473 |
| 1057718 | 91-509 | LG 424 |
| 1057718 | 91-527 | LG 479 |
| 112947 | 91-503 | LG 424 |
| 112947 | 91-506 | LG 473 |
| 112947 | 91-509 | LG 424 |
| 112947 | 91-527 | LG 479 |
| 113579 | 91-502 | LG 477 |
| 113579 | 91-505 | LG 477 |
| 113579 | 91-508 | LG 419 |
| 113579 | 91-525 | LG 477 |
| 113625 | 75-283 | LG 256 |
| 1657517 | 75-283 | LG 256 |
| 1657517SM | 75-283 | LG 256 |
| 2006B103R | 75-283 | LG 256 |
| 2006B130R | 15-368 | LG 277 |
| 2006B38R | 15-366 | LG 277 |
| 2006B78R | 75-208 | LG 277 |
| 2006B80R | 75-199 | LG 254 |
| 2006B80W | 75-199 | LG 254 |
| 2006B84W | 75-661 | LG 277 |
| 20214 | 06-003 | LG 805 |
| 20249 | 60-001 | LG 708 |
| 20256 | 15-366 | LG 277 |
| 227-72H | 91-507 | LG 415 |
| 227-72H | 91-515 | LG 415 |
| 255323 | 33-118-1 | LG 733 |
| 265131 | 75-199 | LG 254 |
| 300441 | 82-322 | LG 883 |
| 300442 | 82-323 | LG 883 |
| 300632 | 392-142* | LG 413 |
| 300632 | 92-142 | LG 413 |
| 300819 | 392-141* | LG 413 |
| 300819 | 92-141 | LG 413 |
| 301067 | 392-142* | LG 413 |
| 301067 | 92-142 | LG 413 |
| 301068 | 392-141* | LG 413 |
| 301068 | 92-141 | LG 413 |
| 30203 | 75-283 | LG 256 |
| 30204 | 75-208 | LG 277 |
| 30218 | 45-225 | LG 232 |
| 30224 | 78-009 | LG 827 |
| 30227-42 | 396-714* | LG 413 |
| 30227-42 | 91-501 | LG 413 |
| 3022750 | 91-502 | LG 477 |
| 3022750 | 91-505 | LG 477 |
| 3022750 | 91-508 | LG 419 |
| 3022750 | 91-525 | LG 477 |
| 30227-50 | 396-723* | LG 413 |
| 30227-50 | 596-323* | LG 453 |
| 30227-50 | 91-502 | LG 477 |
| 30227-50 | 96-323* | LG 477 |
| 30227-50E | 396-723* | LG 413 |
| 30227-50E | 596-323* | LG 453 |
| 30227-50E | 96-323* | LG 477 |
| 3022750H | 91-502 | LG 477 |
| 3022750H | 91-505 | LG 477 |
| 3022750H | 91-508 | LG 419 |
| 3022750H | 91-525 | LG 477 |
| 30227-50H | 396-723* | LG 413 |
| 30227-50H | 596-323* | LG 453 |
| 30227-50H | 91-508 | LG 419 |
| 30227-50H | 96-323* | LG 477 |
| 30227-50T | 396-723* | LG 413 |
| 30227-50T | 596-323* | LG 453 |
| 30227-50T | 96-323* | LG 477 |
| 3022750V | 91-502 | LG 477 |
| 3022750V | 91-505 | LG 477 |
| 3022750V | 91-508 | LG 419 |
| 3022750V | 91-525 | LG 477 |
| 30227-50V | 396-723* | LG 413 |
| 30227-50V | 596-323* | LG 453 |
| 30227-50V | 91-505 | LG 477 |
| 30227-50V | 96-323* | LG 477 |
| 30227-50X | 396-723* | LG 413 |
| 30227-50X | 596-323* | LG 453 |
| 30227-50X | 91-525 | LG 477 |
| 30227-50X | 96-323* | LG 477 |
| 30227-52T | 396-704* | LG 414 |
| 30227-52T | 596-704* | LG 471 |
| 30227-52T | 96-318* | LG 414 |
| 30227-52X | 396-704* | LG 414 |
| 30227-52X | 596-704* | LG 471 |
| 30227-52X | 96-318* | LG 414 |
| 30227-56T | 94-620* | LG 414 |
| 30227-56X | 94-620* | LG 414 |
| 30227-60 | 396-740* | LG 415 |
| 30227-60 | 596-319* | LG 415 |
| 30227-60 | 91-503 | LG 424 |
| 30227-60 | 96-319* | LG 415 |
| 30227-60E | 396-740* | LG 415 |
| 30227-60E | 596-319* | LG 415 |
| 30227-60E | 96-319* | LG 415 |
| 30227-60H | 396-740* | LG 415 |
| 30227-60H | 596-319* | LG 415 |
| 30227-60H | 91-509 | LG 424 |
| 30227-60H | 96-319* | LG 415 |
| 30227-60L | 90-109 | LG 414 |
| 30227-60L | 91-503 | LG 424 |
| 30227-60L | 91-506 | LG 473 |
| 30227-60L | 91-509 | LG 424 |
| 30227-60L | 91-527 | LG 479 |
| 30227-60N | 90-109 | LG 414 |
| 30227-60N | 91-503 | LG 424 |
| 30227-60N | 91-506 | LG 473 |
| 30227-60N | 91-509 | LG 424 |
| 30227-60N | 91-527 | LG 479 |
| 30227-60T | 396-740* | LG 415 |
| 30227-60T | 596-319* | LG 415 |
| 30227-60T | 96-319* | LG 415 |
| 30227-60V | 396-740* | LG 415 |
| 30227-60V | 596-319* | LG 415 |
| 30227-60V | 91-506 | LG 473 |
| 30227-60V | 96-319* | LG 415 |
| 30227-60X | 396-740* | LG 415 |
| 30227-60X | 596-319* | LG 415 |
| 30227-60X | 91-527 | LG 479 |
| 30227-60X | 96-319* | LG 415 |
| 30227-66E | 396-524* | LG 415 |
| 30227-66H | 91-528 | LG 415 |
| 30227-66T | 396-524* | LG 415 |
| 30227-66X | 396-524* | LG 415 |
| 30227-66X | 91-528 | LG 415 |
| 30227-66X2 | 91-528 | LG 415 |
| 30227-72H | 396-752* | LG 415 |
| 30227-72H | 596-752* | LG 415 |
| 30227-72H | 91-507 | LG 415 |
| 30227-72N | 396-752* | LG 415 |
| 30227-72N | 596-752* | LG 415 |
| 30227-72N | 91-515 | LG 415 |
| 30227-72T | 396-752* | LG 415 |
| 30227-72T | 596-752* | LG 415 |
| 30227-72X | 396-752* | LG 415 |
| 30227-72X | 596-752* | LG 415 |
| 30227-74T | 391-526* | LG 416 |
| 30227-74X | 391-526* | LG 416 |
| 30227-74X | 91-526 | LG 416 |
| 30227-74X2 | 91-526 | LG 416 |
| 30227H | 91-502 | LG 477 |
| 30227H | 91-505 | LG 477 |
| 30227H | 91-508 | LG 419 |
| 30227H | 91-525 | LG 477 |
| 30227-H | 396-723* | LG 413 |
| 30227-H | 596-323* | LG 453 |
| 30227-H | 91-508 | LG 419 |
| 30227-H | 96-323* | LG 477 |
| 30227-N | 396-723* | LG 413 |
| 30227-N | 596-323* | LG 453 |
| 30227-N | 91-508 | LG 419 |
| 30227-N | 96-323* | LG 477 |
| 30234 | 78-010 | LG 827 |
| 302360 | 75-211 | LG 277 |
| 30236-0 | 75-211 | LG 277 |
| 40222 | 07-317 | LG 771 |
| 48086 | 75-283 | LG 256 |
| 500017 | 33-106 | LG 943 |
| 50300 | 33-118-1 | LG 733 |
| 60105 | 83-010 | LG 819 |
| 60105 | 83-400 | LG 819 |
| 63227 | 396-714* | LG 413 |
| 63227 | 91-501 | LG 413 |
| 63227-H | 396-714* | LG 413 |
| 63227-N | 396-714* | LG 413 |
| 63227-N | 91-501 | LG 413 |
| 65071 | 27-001 | |
| 65080 | 75-199 | LG 254 |
| 67249 | 60-001 | LG 708 |
| 68140 | 83-010 | LG 819 |
| 68250 | 60-001 | LG 708 |
| 68250-DCM | 60-001 | LG 708 |
| 90122 | 30-026 | LG 208 |
| 93227H | 396-714* | LG 413 |
| 93227H | 91-501 | LG 413 |
| 97346C158 | 15-367 | LG 277 |
| 9907B130 | 15-368 | LG 277 |
| 9907B84 | 75-661 | LG 277 |
| A30227-50N | 91-502 | LG 477 |
| A30227-50N | 91-505 | LG 477 |
| A30227-50N | 91-508 | LG 419 |
| A30227-50N | 91-525 | LG 477 |
| A30227-60N | 396-740* | LG 415 |
| A30227-60N | 596-319* | LG 415 |
| A30227-60N | 90-109 | LG 414 |
| A30227-60N | 96-319* | LG 415 |
| A60227-60N | 91-503 | LG 424 |
| A60227-60N | 91-506 | LG 473 |
| A60227-60N | 91-509 | LG 424 |
| A60227-60N | 91-527 | LG 479 |

X



* OREGON® Gator™ replacement blade

## DIXON

| OEM No. | OREGON | Page |
|---|---|---|
| 10213 | 82-341 | LG 884 |
| 10214 | 82-340 | LG 883 |
| 10215 | 82-342 | LG 884 |
| 10216 | 82-342 | LG 884 |
| 1022 | 72-765 | LG 1043 |
| 10708 | 596-327* | LG 434 |
| 10708 | 96-327* | LG 417 |
| 10710 | 596-327* | LG 434 |
| 10710 | 91-369 | LG 434 |
| 10710 | 96-327* | LG 417 |
| 10715 | 396-726* | LG 391 |
| 10715 | 596-344* | LG 495 |
| 10715 | 96-344* | LG 536 |
| 10782 | 95-085 | LG 462 |
| 10881 | 595-085* | LG 462 |
| 10881 | 95-085 | LG 462 |
| 10947 | 95-085 | LG 462 |
| 11305 | 15-369 | LG 278 |
| 11633 | 396-726* | LG 391 |
| 11633 | 596-344* | LG 495 |
| 11633 | 91-622 | LG 536 |
| 11633 | 96-344* | LG 536 |
| 11645 | 396-735* | LG 452 |
| 11645 | 596-308* | LG 548 |
| 11645 | 91-620 | LG 470 |
| 11645 | 96-308* | LG 456 |
| 11913 | 599-133* | LG 422 |
| 11913 | 96-133* | LG 422 |
| 11914 | 599-133* | LG 422 |
| 11914 | 96-133* | LG 422 |
| 11949 | 599-133* | LG 422 |
| 11949 | 96-133* | LG 422 |
| 12033 | 15-370 | LG 278 |
| 12172 | 15-371 | LG 278 |
| 12339 | 396-764* | LG 537 |
| 12339 | 596-341* | LG 482 |
| 12339 | 91-627 | LG 482 |
| 12339 | 96-341* | LG 446 |
| 12421 | 396-740* | LG 415 |
| 12421 | 596-319* | LG 415 |
| 12421 | 91-253 | LG 415 |
| 12421 | 96-319* | LG 415 |
| 124279 | 15-372 | LG 278 |
| 12441 | 91-253 | LG 415 |
| 12441 | 95-085 | LG 462 |
| 12451 | 396-740* | LG 415 |
| 12451 | 596-319* | LG 415 |
| 12451 | 96-319* | LG 415 |
| 12452 | 396-764* | LG 537 |
| 12452 | 596-341* | LG 482 |
| 12452 | 96-341* | LG 446 |
| 12508 | 396-740* | LG 415 |
| 12508 | 596-319* | LG 415 |
| 12508 | 96-319* | LG 415 |
| 12509 | 396-764* | LG 537 |
| 12509 | 596-341* | LG 482 |
| 12509 | 96-341* | LG 446 |
| 1300A | 15-373 | LG 278 |
| 1324 | 92-149 | LG 392 |
| 1324 | 95-085 | LG 462 |
| 13368 | 396-740* | LG 415 |
| 13368 | 596-319* | LG 415 |
| 13368 | 96-319* | LG 415 |
| 1352 | 91-714 | LG 543 |
| 1352 | 95-085 | LG 462 |
| 13867 | 491-530 | LG 416 |
| 13867 | 496-399* | LG 416 |
| 13869 | 396-740* | LG 415 |
| 13869 | 596-319* | LG 415 |
| 13869 | 96-319* | LG 415 |
| 13870 | 396-740* | LG 415 |
| 13870 | 596-319* | LG 415 |
| 13870 | 96-319* | LG 415 |
| 13871 | 396-764* | LG 537 |
| 13871 | 596-341* | LG 482 |
| 13871 | 96-341* | LG 446 |
| 13918 | 491-530 | LG 416 |
| 13918 | 496-399* | LG 416 |
| 13919 | 590-669* | LG 420 |
| 13919 | 90-669* | LG 420 |
| 13919 | 91-146 | LG 419 |
| 13920 | 596-303* | LG 416 |
| 13920 | 91-167 | LG 416 |
| 13920 | 96-303* | LG 416 |
| 13921 | 396-740* | LG 415 |
| 13921 | 596-319* | LG 415 |
| 13921 | 96-319* | LG 415 |
| 13922 | 396-740* | LG 415 |
| 13922 | 596-319* | LG 415 |
| 13922 | 91-253 | LG 415 |
| 13922 | 96-319* | LG 415 |
| 13923 | 396-764* | LG 537 |
| 13923 | 596-341* | LG 482 |
| 13923 | 91-627 | LG 482 |
| 13923 | 96-341* | LG 446 |
| 13925 | 595-601* | LG 400 |
| 13925 | 95-047 | LG 378 |
| 13925 | 95-601* | LG 423 |
| 13926 | 596-900* | LG 380 |
| 13926 | 95-086 | LG 425 |
| 13926 | 96-900* | LG 526 |
| 13932 | 595-601* | LG 400 |
| 13932 | 95-047 | LG 378 |
| 13932 | 95-601* | LG 423 |
| 13933 | 595-601* | LG 400 |
| 13933 | 95-601* | LG 423 |
| 13938 | 596-303* | LG 416 |
| 13938 | 91-167 | LG 416 |
| 13938 | 96-303* | LG 416 |
| 13939 | 596-303* | LG 416 |
| 13939 | 91-500 | LG 416 |
| 13939 | 96-303* | LG 416 |
| 13940 | 596-303* | LG 416 |
| 13940 | 91-500 | LG 416 |
| 13940 | 96-303* | LG 416 |
| 13942 | 596-303* | LG 416 |
| 13942 | 96-303* | LG 416 |
| 13943 | 491-530 | LG 416 |
| 13943 | 496-399* | LG 416 |
| 13944 | 496-399* | LG 416 |
| 13945 | 496-399* | LG 416 |
| 13947 | 496-399* | LG 416 |
| 13948 | 590-669* | LG 420 |
| 13948 | 90-669* | LG 420 |
| 13949 | 590-669* | LG 420 |
| 13949 | 90-669* | LG 420 |
| 13950 | 590-669* | LG 420 |
| 13950 | 90-669* | LG 420 |
| 13952 | 590-669* | LG 420 |
| 13952 | 90-669* | LG 420 |
| 13955 | 590-669* | LG 420 |
| 13955 | 90-669* | LG 420 |
| 13956 | 396-740* | LG 415 |
| 13956 | 596-319* | LG 415 |
| 13956 | 91-253 | LG 415 |
| 13956 | 96-319* | LG 415 |
| 13957 | 396-740* | LG 415 |
| 13957 | 596-319* | LG 415 |
| 13957 | 96-319* | LG 415 |
| 13958 | 396-740* | LG 415 |
| 13958 | 596-319* | LG 415 |
| 13958 | 96-319* | LG 415 |
| 13960 | 396-740* | LG 415 |
| 13960 | 596-319* | LG 415 |
| 13960 | 96-319* | LG 415 |
| 13961 | 396-764* | LG 537 |
| 13961 | 596-341* | LG 482 |
| 13961 | 91-627 | LG 482 |
| 13961 | 96-341* | LG 446 |
| 13962 | 396-764* | LG 537 |
| 13962 | 596-341* | LG 482 |
| 13962 | 96-341* | LG 446 |
| 13963 | 396-764* | LG 537 |
| 13963 | 596-341* | LG 482 |
| 13963 | 96-341* | LG 446 |
| 13998 | 396-764* | LG 537 |
| 13998 | 596-341* | LG 482 |
| 13998 | 96-341* | LG 446 |
| 1588100 | 72-725 | LG 1044 |
| 1611 | 15-386 | LG 278 |
| 1636451 | 91-714 | LG 543 |
| 1636451 | 95-085 | LG 462 |
| 1657589 | 91-714 | LG 543 |
| 1657589 | 95-085 | LG 462 |
| 1671593 | 91-714 | LG 543 |
| 1671593 | 95-085 | LG 462 |
| 1684 | 15-374 | LG 278 |
| 1685172 | 91-714 | LG 543 |
| 1685172 | 95-085 | LG 462 |
| 1701 | 45-225 | LG 232 |
| 17080 | 72-725 | LG 1044 |
| 1714 | 15-375 | LG 278 |
| 17279 | 491-530 | LG 416 |
| 17279 | 496-399* | LG 416 |
| 17280 | 496-399* | LG 416 |
| 17281 | 496-399* | LG 416 |
| 174-7640 | 95-085 | LG 462 |
| 174-8302 | 91-714 | LG 543 |
| 174-8302 | 95-085 | LG 462 |
| 1751 | 34-009 | LG 821 |
| 1751 | 34-010 | LG 831 |
| 177-2335 | 95-085 | LG 462 |
| 1860 | 15-376 | LG 278 |
| 1893 | 95-085 | LG 462 |
| 18931 | 91-253 | LG 415 |
| 18931 | 95-085 | LG 462 |
| 2483 | 96-631* | LG 428 |
| 2484 | 96-631* | LG 428 |
| 4008 | 33-330 | LG 729 |
| 4008 | 33-331 | LG 730 |
| 4124 | 33-331 | LG 730 |
| 4197 | 33-386 | LG 942 |
| 420463 | 95-076 | LG 404 |
| 420463 | 95-615* | LG 426 |
| 421825 | 95-076 | LG 404 |
| 421825 | 95-615* | LG 426 |
| 4242 | 33-028 | LG 947 |
| 430538 | 33-386 | LG 942 |
| 430686 | 33-028 | LG 947 |
| 510417801 | 595-085* | LG 462 |
| 510417801 | 95-085 | LG 462 |
| 510417901 | 195-048 | LG 430 |
| 510417901 | 596-900* | LG 380 |
| 510417901 | 96-900* | LG 526 |
| 522829301 | 396-727* | LG 467 |
| 522829301 | 596-347* | LG 448 |
| 522829301 | 96-347* | LG 387 |
| 522936601 | 396-727* | LG 467 |
| 522936601 | 596-347* | LG 448 |
| 522936601 | 96-347* | LG 387 |
| 532106712 | 595-621* | LG 467 |
| 532106712 | 95-057 | LG 380 |
| 532106712 | 95-621* | LG 402 |
| 532134149 | 195-019 | LG 466 |
| 532134149 | 596-900* | LG 380 |
| 532134149 | 96-900* | LG 526 |
| 532138971 | 195-032 | LG 425 |
| 532138971 | 596-900* | LG 380 |
| 532138971 | 96-900* | LG 526 |
| 532180054 | 195-062 | LG 376 |
| 532180054 | 596-615* | LG 529 |
| 532180054 | 96-615* | LG 461 |
| 532187756 | 195-072 | LG 530 |
| 532187756 | 595-605* | LG 422 |
| 532187756 | 95-605* | LG 463 |
| 532405380 | 195-070 | LG 469 |
| 532405380 | 596-370* | LG 427 |
| 532405380 | 96-370* | LG 533 |
| 532419274 | 595-807* | LG 382 |
| 532420463 | 95-076 | LG 404 |
| 532420463 | 95-615* | LG 426 |
| 532421825 | 95-076 | LG 404 |
| 532421825 | 95-615* | LG 426 |
| 532437601 | 95-076 | LG 404 |
| 532437601 | 95-615* | LG 426 |
| 539100340 | 396-735* | LG 452 |
| 539100340 | 596-308* | LG 548 |
| 539100340 | 91-620 | LG 470 |
| 539100340 | 96-308* | LG 456 |
| 539100341 | 396-726* | LG 391 |
| 539100341 | 596-344* | LG 495 |
| 539100341 | 91-622 | LG 536 |
| 539100341 | 96-344* | LG 536 |
| 539101080 | 33-028 | LG 947 |
| 539105476 | 396-731* | LG 427 |
| 539105711 | 396-727* | LG 467 |
| 539105711 | 596-347* | LG 448 |
| 539105711 | 95-078 | LG 496 |
| 539105711 | 96-347* | LG 387 |
| 539105712 | 396-726* | LG 391 |
| 539105712 | 596-344* | LG 495 |
| 539105712 | 91-256 | LG 437 |
| 539105712 | 96-344* | LG 536 |
| 539106040 | 596-310* | LG 447 |
| 539106040 | 96-310* | LG 444 |
| 539106040 | 99-127 | LG 375 |
| 539109755 | 396-727* | LG 467 |
| 539109755 | 596-347* | LG 448 |
| 539109755 | 96-347* | LG 387 |
| 539112078 | 595-088* | LG 458 |
| 539112078 | 95-084 | LG 494 |
| 539112078 | 95-088* | LG 458 |
| 539113425 | 595-087* | LG 417 |
| 539113425 | 95-087 | LG 460 |
| 539113948 | 91-146 | LG 419 |
| 539115245 | 91-714 | LG 543 |
| 539115245 | 95-085 | LG 462 |
| 539115279 | 45-225 | LG 232 |
| 539115774 | 33-331 | LG 730 |
| 539115788 | 33-331 | LG 730 |
| 539115802 | 33-028 | LG 947 |
| 539116200 | 15-386 | LG 278 |
| 539117174 | 590-669* | LG 420 |
| 539117174 | 90-669* | LG 420 |
| 539117174 | 91-146 | LG 419 |
| 539117973 | 595-085* | LG 462 |
| 539117973 | 95-085 | LG 462 |
| 539118038 | 596-900* | LG 380 |
| 539118038 | 96-900* | LG 526 |
| 539118672 | 599-133* | LG 422 |
| 539118672 | 96-133* | LG 422 |
| 539118673 | 599-133* | LG 422 |
| 539118673 | 96-133* | LG 422 |
| 539118957 | 396-764* | LG 537 |
| 539118957 | 596-341* | LG 482 |
| 539118957 | 91-627 | LG 482 |
| 539118957 | 96-341* | LG 446 |
| 539119802 | 396-764* | LG 537 |
| 539119802 | 596-341* | LG 482 |
| 539119802 | 96-341* | LG 446 |
| 539119836 | 491-530 | LG 416 |
| 539119836 | 496-399* | LG 416 |
| 539119838 | 596-303* | LG 416 |
| 539119838 | 91-167 | LG 416 |
| 539119838 | 96-303* | LG 416 |
| 539119841 | 396-764* | LG 537 |
| 539119841 | 596-341* | LG 482 |
| 539119841 | 91-627 | LG 482 |
| 539119841 | 96-341* | LG 446 |

X

# 2019 OEM X-Reference

| OEM No. | OREGON | Page |
|---|---|---|
| **DIXON** | | |
| 539119842 | 595-601* | LG 400 |
| 539119842 | 95-047 | LG 378 |
| 539119842 | 95-601* | LG 423 |
| 539119843 | 596-900* | LG 380 |
| 539119843 | 95-086 | LG 425 |
| 539119843 | 96-900* | LG 526 |
| 539119844 | 96-631* | LG 428 |
| 539119845 | 96-631* | LG 428 |
| 539119846 | 96-631* | LG 428 |
| 539119849 | 595-601* | LG 400 |
| 539119849 | 95-047 | LG 378 |
| 539119849 | 95-601* | LG 423 |
| 539119852 | 596-900* | LG 380 |
| 539119852 | 96-900* | LG 526 |
| 539119853 | 596-303* | LG 416 |
| 539119853 | 91-167 | LG 416 |
| 539119853 | 96-303* | LG 416 |
| 539119860 | 595-601* | LG 400 |
| 539119860 | 95-601* | LG 423 |
| 539119862 | 496-399* | LG 416 |
| 539119863 | 590-669* | LG 420 |
| 539119863 | 90-669* | LG 420 |
| 539119863 | 91-146 | LG 419 |
| 539119871 | 396-740* | LG 415 |
| 539119871 | 596-319* | LG 415 |
| 539119871 | 91-253 | LG 415 |
| 539119871 | 96-319* | LG 415 |
| 539119876 | 396-764* | LG 537 |
| 539119876 | 596-341* | LG 482 |
| 539119876 | 91-627 | LG 482 |
| 539119876 | 96-341* | LG 446 |
| 539119877 | 396-764* | LG 537 |
| 539119877 | 596-341* | LG 482 |
| 539119877 | 96-341* | LG 446 |
| 539119909 | 396-764* | LG 537 |
| 539119909 | 596-341* | LG 482 |
| 539119909 | 96-341* | LG 446 |
| 539125010 | 33-386 | LG 942 |
| 539125515 | 45-295 | LG 232 |
| 539125582 | 45-256 | LG 224 |
| 539126275 | 596-303* | LG 416 |
| 539126275 | 91-167 | LG 416 |
| 539126275 | 96-303* | LG 416 |
| 539126431 | 396-723* | LG 413 |
| 539126431 | 596-323* | LG 453 |
| 539126431 | 91-508 | LG 419 |
| 539126431 | 96-323* | LG 477 |
| 539127975 | 91-127 | LG 396 |
| 539127975 | 99-615* | LG 552 |
| 539127977 | 592-160* | LG 419 |
| 539127977 | 92-160 | LG 395 |
| 539128189 | 96-129* | LG 396 |
| 539128711 | 33-119-1 | LG 734 |
| 539128819 | 96-129* | LG 396 |
| 539129543 | 91-500 | LG 416 |
| 539129683 | 596-303* | LG 416 |
| 539129683 | 91-167 | LG 416 |
| 539129683 | 96-303* | LG 416 |
| 539129700 | 596-303* | LG 416 |
| 539129700 | 91-167 | LG 416 |
| 539129700 | 96-303* | LG 416 |
| 539129860 | 99-617* | LG 395 |
| 5565 | 83-010 | LG 819 |
| 5565 | 83-400 | LG 819 |
| 574481301 | 396-727* | LG 467 |
| 574481301 | 596-347* | LG 448 |
| 574481301 | 96-347* | LG 387 |
| 575139201 | 596-303* | LG 416 |
| 575139201 | 96-303* | LG 416 |
| 575265901 | 95-092 | LG 423 |
| 575296401 | 595-087* | LG 417 |
| 575296401 | 95-087 | LG 460 |
| 580244001 | 95-615* | LG 426 |
| 585587701 | 95-615* | LG 426 |
| 6011 | 45-295 | LG 232 |
| 6013 | 91-167 | LG 416 |
| 60292 | 91-126 | LG 548 |
| 60292 | 99-617* | LG 395 |
| 60293 | 91-127 | LG 396 |
| 60293 | 99-615* | LG 552 |
| 60296 | 592-160* | LG 419 |
| 60296 | 92-160 | LG 395 |
| 60460 | 99-617* | LG 395 |
| 60461 | 99-615* | LG 552 |
| 60645 | 96-129* | LG 396 |
| 6092 | 596-303* | LG 416 |
| 6092 | 91-500 | LG 416 |
| 6092 | 96-303* | LG 416 |
| 6111 | 15-386 | LG 278 |
| 61516 | 33-119-1 | LG 734 |
| 61656 | 96-129* | LG 396 |
| 61695 | 96-129* | LG 396 |
| 6231 | 91-500 | LG 416 |
| 6236 | 596-303* | LG 416 |
| 6236 | 96-303* | LG 416 |
| 6894 | 96-631* | LG 428 |
| 6895 | 95-085 | LG 462 |
| 6896 | 596-303* | LG 416 |
| 6896 | 96-303* | LG 416 |
| 6897 | 590-669* | LG 420 |
| 6897 | 90-669* | LG 420 |
| 7100124 | 72-725 | LG 1044 |
| 7725 | 15-388 | LG 278 |
| 79222 | 91-127 | LG 396 |
| 79222 | 91-128 | LG 424 |
| 79222 | 95-085 | LG 462 |
| 7-9222 | 91-127 | LG 396 |
| 7-9222 | 91-128 | LG 424 |
| 7-9222 | 95-085 | LG 462 |
| 79371 | 91-127 | LG 396 |
| 79371 | 91-128 | LG 424 |
| 79371 | 95-085 | LG 462 |
| 7-9371 | 91-127 | LG 396 |
| 7-9371 | 91-128 | LG 424 |
| 7-9371 | 95-085 | LG 462 |
| 8340 | 82-340 | LG 883 |
| 8398 | 82-341 | LG 884 |
| 8399 | 82-342 | LG 884 |
| 8400 | 82-340 | LG 883 |
| 8600 | 91-167 | LG 416 |
| 8659 | 91-167 | LG 416 |
| 8688 | 596-303* | LG 416 |
| 8688 | 91-167 | LG 416 |
| 8688 | 96-303* | LG 416 |
| 917532420463 | 95-076 | LG 404 |
| 917532420463 | 95-615* | LG 426 |
| 917532421825 | 95-076 | LG 404 |
| 917532421825 | 95-615* | LG 426 |
| 9258 | 396-723* | LG 413 |
| 9258 | 596-323* | LG 453 |
| 9258 | 91-508 | LG 419 |
| 9258 | 96-323* | LG 477 |
| 9265 | 396-723* | LG 413 |
| 9265 | 596-323* | LG 453 |
| 9265 | 91-508 | LG 419 |
| 9265 | 96-323* | LG 477 |
| 9383 | 396-740* | LG 415 |
| 9383 | 596-319* | LG 415 |
| 9383 | 91-253 | LG 415 |
| 9383 | 95-085 | LG 462 |
| 9383 | 96-319* | LG 415 |
| 9443 | 590-669* | LG 420 |
| 9443 | 90-669* | LG 420 |
| 9444 | 590-669* | LG 420 |
| 9444 | 90-669* | LG 420 |
| 9444 | 91-146 | LG 419 |
| AM101589 | 72-725 | LG 1044 |
| DIX-1 | 72-765 | LG 1043 |
| DOP33-119-1DI | 33-119-1 | LG 734 |
| H1667 | 91-127 | LG 396 |
| H1667 | 91-128 | LG 424 |
| H1667 | 95-085 | LG 462 |
| H1708 | 91-127 | LG 396 |
| H1708 | 91-128 | LG 424 |
| H1708 | 95-085 | LG 462 |
| **DOLMAR** | | |
| 010.151.020.0 | 49-812 | LG 612 |
| 021.151.180.0 | 55-342 | LG 627 |
| 021.151.540.0 | 49-812 | LG 612 |
| 108.151.190.0 | 49-021 | LG 629 |
| 118.151.210.0 | 49-833 | LG 611 |
| 118.151.520.0 | 49-807 | LG 611 |
| 119.151.540.7 | 49-835 | LG 611 |
| 144.150.030.0 | 55-333 | LG 633 |
| 144.150.360.0 | 49-021 | LG 629 |
| 375.151.060.0 | 49-026 | LG 769 |
| A6000-260-0000 | 43-685 | LG 936 |
| **DR** | | |
| 151691 | 596-900* | LG 380 |
| 151691 | 96-900* | LG 526 |
| 152871 | 396-735* | LG 452 |
| 152871 | 596-308* | LG 548 |
| 152871 | 91-620 | LG 470 |
| 152871 | 96-308* | LG 456 |
| 225381 | 396-726* | LG 391 |
| 225381 | 596-344* | LG 495 |
| 225381 | 91-622 | LG 536 |
| 225381 | 96-344* | LG 536 |
| **DURASTEEL** | | |
| 1609 | 75-120 | LG 300 |
| **DYNAMARK** | | |
| 162313 | 45-087 | LG 243 |
| 300575 | 15-649 | LG 309 |
| 300680P | 75-136 | LG 309 |
| 300842 | 75-137 | LG 309 |
| 301137 | 45-087 | LG 243 |
| 301172 | 80-748 | LG 852 |
| 301503 | 46-330 | LG 701 |
| 302289 | 15-650 | LG 259 |
| 303241 | 15-651 | LG 259 |
| 305148 | 15-652 | LG 259 |
| 306932 | 96-005 | |
| 308701 | 15-653 | LG 310 |
| 309069 | 96-005 | |
| 314108P | 75-138 | LG 310 |
| 319596 | 75-289 | LG 863 |
| 321205 | 75-977 | LG 310 |
| 33125 | 15-654 | LG 309 |
| 3526 | 15-655 | LG 309 |
| 39831 | 72-304 | LG 1038 |
| 39979 | 45-079 | LG 249 |
| 40195 | 45-098 | LG 243 |
| 44745 | 33-386 | LG 942 |
| 45186 | 15-657 | LG 259 |
| 48044 | 75-179 | LG 310 |
| 49562 | 45-257 | LG 245 |
| 49878 | 15-659 | LG 309 |
| 52407 | 45-009 | LG 853 |
| 52584 | 72-304 | LG 1038 |
| 57214P | 75-142 | LG 310 |
| 57299 | 96-005 | |
| 57556 | 15-660 | LG 309 |
| 58170 | 75-143 | LG 310 |
| 58190 | 96-005 | |
| 76860 | 96-005 | |
| 782966 | 33-330 | LG 729 |
| **DYNAMOW** | | |
| DM24 | 96-724* | LG 430 |
| **E.T. RUGG** | | |
| 10858 | 34-031 | LG 821 |
| 21101 | 34-008 | LG 821 |
| **EATON** | | |
| 245223 | 45-259 | LG 224 |
| 754-0151 | 75-004 | LG 301 |
| 754-0935 | 75-092 | LG 304 |
| 954-0151 | 75-004 | LG 301 |
| 954-0935 | 75-092 | LG 304 |
| **ECHO** | | |
| 102152802 | 69-171 | LG 981 |
| 123100-02960 | 49-816 | LG 612 |
| 123100-03930 | 49-812 | LG 612 |
| 123100-03930 | 49-816 | LG 612 |
| 123100-04260 | 49-816 | LG 612 |
| 123100-04261 | 49-816 | LG 612 |
| 123100-04930 | 49-816 | LG 612 |
| 123100-05960 | 49-816 | LG 612 |
| 123100-06520 | 49-816 | LG 612 |
| 123100-07320 | 49-816 | LG 612 |
| 123100-09220 | 49-816 | LG 612 |
| 123100-09320 | 49-816 | LG 612 |
| 123100-09560 | 49-816 | LG 612 |
| 123100-10130 | 49-816 | LG 612 |
| 123100-10530 | 49-816 | LG 612 |
| 123100-10630 | 49-834 | LG 611 |
| 123100-10631 | 49-834 | LG 611 |
| 123100-10633 | 49-834 | LG 611 |
| 123100-11230 | 49-816 | LG 612 |
| 123100-12330 | 49-832 | LG 611 |
| 123100-12430 | 49-834 | LG 611 |
| 123100-12431 | 49-834 | LG 611 |
| 123100-13730 | 49-832 | LG 611 |
| 123100-14330 | 49-832 | LG 611 |
| 123100-15030 | 49-816 | LG 612 |
| 123100-16330 | 49-816 | LG 612 |
| 123100-16430 | 49-834 | LG 611 |
| 123100-19030 | 49-832 | LG 611 |
| 123100-22130 | 49-816 | LG 612 |
| 123100-23230 | 49-816 | LG 612 |
| 123100-37330 | 49-816 | LG 612 |
| 123100-43130 | 49-816 | LG 612 |
| 123101-03930 | 49-812 | LG 612 |
| 123101-05960 | 49-812 | LG 612 |
| 123101-09560 | 49-812 | LG 612 |
| 123101-10530 | 49-812 | LG 612 |
| 123101-12330 | 49-806 | LG 611 |
| 123101-12430 | 49-810 | LG 612 |
| 123101-13730 | 49-835 | LG 611 |
| 123101-16130 | 49-835 | LG 611 |
| 123101-17330 | 49-835 | LG 611 |
| 123101-37330 | 49-812 | LG 612 |
| 123103-10630 | 49-810 | LG 612 |
| 123126-10631 | 55-342 | LG 627 |
| 123137-03930 | 49-021 | LG 629 |
| 123146-03930 | 55-334 | LG 633 |
| 123146-10630 | 55-333 | LG 633 |
| 123168-10631 | 55-343 | LG 627 |
| 123181-26030 | 49-026 | LG 769 |
| 12318139130 | 07-088 | LG 768 |
| 123181-39130 | 07-088 | LG 768 |
| 123-181-39130 | 07-088 | LG 768 |
| 123181-40630 | 49-020 | LG 631 |
| 125200-13123 | 50-620 | LG 595 |
| 125200-13312 | 50-619 | LG 595 |
| 125200-49030 | 50-619 | LG 595 |
| 12530042030 | 49-822-0 | LG 616 |
| 12538108660 | 07-084 | LG 768 |
| 125381-08660 | 07-084 | LG 768 |
| 13030508360 | 55-201 | LG 190 |
| 130305-08360 | 55-201 | LG 190 |
| 13030508361 | 55-201 | LG 190 |
| 130310-00000 | 55-227 | LG 191 |

X



* OREGON® Gator™ replacement blade

| OEM No. | OREGON | Page |
|---|---|---|
| **ECHO** | | |
| 130310-00760 | 30-931 | LG 191 |
| 130310-03360 | 55-227 | LG 191 |
| 130-310-0336-0 | 55-227 | LG 191 |
| 13031004560 | 30-003 | LG 190 |
| 130310-04560 | 30-003 | LG 190 |
| 13031004560A | 30-003 | LG 190 |
| 13031004560LW | 30-003 | LG 190 |
| 13031051730 | 30-009 | LG 190 |
| 130310-51730 | 30-009 | LG 190 |
| 13031051730A | 30-009 | LG 190 |
| 13031051830 | 30-121 | LG 190 |
| 13031051830 | 30-831 | LG 190 |
| 130310-51830 | 30-121 | LG 190 |
| 130310-51830 | 30-831 | LG 190 |
| 130-310-51830 | 30-121 | LG 190 |
| 13031054130 | 30-119 | LG 191 |
| 13031054130 | 30-830 | LG 191 |
| 130310-54130 | 30-119 | LG 191 |
| 130310-54130 | 30-830 | LG 191 |
| 13031700760 | 30-931 | LG 191 |
| 130317-00760 | 30-931 | LG 191 |
| 13100406320 | 55-120 | LG 770 |
| 131004-06320 | 55-120 | LG 770 |
| 131004-06320 | 55-123 | LG 770 |
| 13100406320A | 55-120 | LG 770 |
| 13100406610 | 55-008 | LG 771 |
| 131004-06610 | 55-008 | LG 771 |
| 13100406610A | 55-008 | LG 771 |
| 13100440630 | 55-122 | LG 770 |
| 13100440930 | 55-122 | LG 770 |
| 131004-40930 | 55-122 | LG 770 |
| 13100440930A | 55-122 | LG 770 |
| 13100441030 | 55-122 | LG 770 |
| 13100448730 | 55-122 | LG 770 |
| 131004-48730 | 55-122 | LG 770 |
| 13100453530 | 55-122 | LG 770 |
| 13100455730 | 55-122 | LG 770 |
| 131004-55730 | 55-122 | LG 770 |
| 13100455830 | 55-122 | LG 770 |
| 131004-55830 | 55-122 | LG 770 |
| 13120506530 | 07-206 | LG 776 |
| 131205-06530 | 07-206 | LG 776 |
| 131205-07320 | 07-206 | LG 776 |
| 13120507321 | 07-206 | LG 776 |
| 13130040630 | 55-157 | LG 763 |
| 131300-40630 | 07-007 | LG 689 |
| 13130056430 | 55-157 | LG 763 |
| 131300-56430 | 55-157 | LG 763 |
| 13130056430A | 55-157 | LG 763 |
| 13130056431 | 55-157 | LG 763 |
| 13160002260A | 55-008 | LG 771 |
| 131600-03360 | 07-011 | LG 763 |
| 13160009860 | 55-008 | LG 771 |
| 131600-09860 | 55-008 | LG 771 |
| 13160009861 | 55-008 | LG 771 |
| 131600-09861 | 55-008 | LG 771 |
| 131600-22130 | 55-110 | LG 765 |
| 132007-04920 | 07-010 | LG 764 |
| 132007-07530 | 07-010 | LG 764 |
| 13211544330 | 07-090 | LG 764 |
| 132115-44330 | 07-090 | LG 764 |
| 132115-46730 | 07-126 | LG 764 |
| 132115-55930 | 07-085 | LG 764 |
| 17500905532 | 55-252 | LG 1019 |
| 175009-05532 | 55-252 | LG 1019 |
| 17500955931 | 55-252 | LG 1019 |
| 177202-44330 | 31-093 | LG 932 |
| 177215-43130 | 31-094 | LG 932 |
| 177215-44430 | 55-115 | LG 932 |
| 177218-40630 | 31-091 | LG 930 |
| 177220-42030 | 43-509 | LG 936 |
| 17722800760 | 31-100 | LG 929 |
| 17722801110 | 31-100 | LG 929 |
| 177228-01110 | 31-100 | LG 929 |
| 17801052130 | 55-116 | LG 1018 |
| 178010-52130 | 55-116 | LG 1018 |
| 215407 | 55-807 | LG 994 |
| 215603 | 15-302 | LG 271 |
| 215603 | 55-302-1 | LG 992 |
| 226000031 | 30-439-1 | LG 190 |
| 30 | 55-157 | LG 763 |
| 356000030 | 55-157 | LG 763 |
| 43301402830 | 56-004 | LG 686 |
| 433014-02830 | 56-004 | LG 686 |
| 43301611031 | 56-004 | LG 686 |
| 433016-11031 | 56-004 | LG 686 |
| 43301912330 | 04-008 | LG 686 |
| 448730 | 55-122 | LG 770 |
| 508361 | 55-201 | LG 190 |
| 69601552631 | 40-141 | LG 585 |
| 69601552632 | 40-140 | LG 584 |
| 69601553630 | 40-147 | LG 588 |
| 720237001 | 40-140 | LG 584 |
| 74184566145 | 55-157 | LG 763 |
| 9860 | 55-008 | LG 771 |
| 9861 | 55-008 | LG 771 |
| 99999999999 | 30-003 | LG 190 |
| 99999999999 | 55-122 | LG 770 |
| A02100380 | 50-621 | LG 595 |
| A226000031 | 30-439-1 | LG 190 |
| A226000032 | 30-439-1 | LG 190 |
| A226001410 | 30-119 | LG 191 |
| A356000030 | 55-157 | LG 763 |
| A356000031 | 55-157 | LG 763 |
| AM105998 | 55-122 | LG 770 |
| AM115397 | 55-252 | LG 1019 |
| PT10281 | 55-227 | LG 191 |
| PT8376 | 30-931 | LG 191 |
| **EFCO** | | |
| 2318-139 | 49-026 | LG 769 |
| 2318-283 | 49-816 | LG 612 |
| 2318-285 | 49-816 | LG 612 |
| 2318-303 | 49-816 | LG 612 |
| 2318-308 | 49-812 | LG 612 |
| 2318-353 | 49-816 | LG 612 |
| 2318-441 | 49-816 | LG 612 |
| 2318-450 | 49-816 | LG 612 |
| **ELECTROLEUX** | | |
| 100011 | 55-333 | LG 633 |
| 123625 | 49-812 | LG 612 |
| 123626 | 49-816 | LG 612 |
| 123627 | 49-816 | LG 612 |
| 123627 | 49-831 | LG 612 |
| 123629 | 49-816 | LG 612 |
| 123633 | 49-812 | LG 612 |
| 123634 | 49-816 | LG 612 |
| 123639 | 49-816 | LG 612 |
| 123640 | 49-812 | LG 612 |
| 364400 | 55-342 | LG 627 |
| 364500 | 55-343 | LG 627 |
| 430755 | 49-021 | LG 629 |
| 474626 | 49-834 | LG 611 |
| 475152 | 49-812 | LG 612 |
| 475568 | 49-816 | LG 612 |
| 475569 | 49-834 | LG 611 |
| 475570 | 49-816 | LG 612 |
| 501-4667-01 | 49-021 | LG 629 |
| 501-6661-01 | 55-342 | LG 627 |
| 501-6684-01 | 49-816 | LG 612 |
| 501-6971-01 | 49-814 | LG 614 |
| 501-8834-01 | 49-816 | LG 612 |
| 502-1035-01 | 49-812 | LG 612 |
| 502-1831-01 | 49-020 | LG 631 |
| 503-0818-01 | 55-334 | LG 633 |
| 503-1170-01 | 49-021 | LG 629 |
| 503-5742-01 | 55-333 | LG 633 |
| 504-1000-11 | 55-333 | LG 633 |
| 504-3645-00 | 55-343 | LG 627 |
| 505-3167-31 | 55-342 | LG 627 |
| 505-5201-30 | 49-816 | LG 612 |
| 505-5201-31 | 49-812 | LG 612 |
| 507123625 | 49-812 | LG 612 |
| 507123626 | 49-816 | LG 612 |
| 507123627 | 49-816 | LG 612 |
| 507123627 | 49-831 | LG 612 |
| 507123633 | 49-812 | LG 612 |
| 507123634 | 49-816 | LG 612 |
| 507123639 | 49-816 | LG 612 |
| 507123640 | 49-812 | LG 612 |
| 507432582 | 55-342 | LG 627 |
| 507474626 | 49-834 | LG 611 |
| 507475152 | 49-812 | LG 612 |
| 507475568 | 49-816 | LG 612 |
| 507475569 | 49-834 | LG 611 |
| 507475570 | 49-816 | LG 612 |
| 507520130 | 49-816 | LG 612 |
| 507520131 | 49-812 | LG 612 |
| 507-6667-01 | 55-342 | LG 627 |
| 520107 | 49-021 | LG 629 |
| 520130 | 49-816 | LG 612 |
| 520131 | 49-812 | LG 612 |
| 530035162 | 55-333 | LG 633 |
| 531-0024-38 | 49-020 | LG 631 |
| 935-00119 | 49-812 | LG 612 |
| **EMAK** | | |
| 2318.139 | 49-026 | LG 769 |
| 2318.283 | 49-816 | LG 612 |
| 2318.285 | 49-816 | LG 612 |
| 2318.303 | 49-816 | LG 612 |
| 2318.308 | 49-812 | LG 612 |
| 2318.353 | 49-816 | LG 612 |
| 2318.441 | 49-812 | LG 612 |
| 2318.442 | 49-816 | LG 612 |
| 2318.45 | 49-816 | LG 612 |
| 2318.450 | 49-816 | LG 612 |
| 2318.547 | 49-831 | LG 612 |
| 33.00203 | 49-021 | LG 629 |
| 33.00225 | 49-816 | LG 612 |
| 33.01037 | 49-816 | LG 612 |
| 33-00224 | 49-812 | LG 612 |
| 33-00240 | 55-342 | LG 627 |
| 33-00869 | 49-812 | LG 612 |
| 350.00152 | 49-021 | LG 629 |
| 350.00168 | 55-343 | LG 627 |
| 740-00150 | 49-831 | LG 612 |
| 935.0012 | 49-816 | LG 612 |
| 935.00120 | 49-816 | LG 612 |
| 946-00209 | 49-831 | LG 612 |
| 946-00210 | 49-812 | LG 612 |
| 950.00139 | 55-342 | LG 627 |
| 950-00161 | 49-835 | LG 611 |
| **ENCORE** | | |
| 100353 | 04-125 | LG 694 |
| 253027 | 40-703 | LG 590 |
| 362005 | 48-202 | LG 694 |
| 362063 | 48-148 | LG 695 |
| 363006 | 09-804 | LG 233 |
| 363007 | 45-030 | LG 245 |
| 363007 | 45-127 | LG 244 |
| 363007 | 48-320 | LG 238 |
| 363012 | 45-060 | LG 234 |
| 363058 | 82-305 | LG 908 |
| 363119 | 78-651 | LG 835 |
| 363137 | 78-673 | LG 839 |
| 363146 | 45-220 | LG 232 |
| 363170 | 48-141 | LG 249 |
| 363187 | 45-031 | LG 232 |
| 363191 | 78-680 | LG 840 |
| 363211 | 75-260 | LG 312 |
| 363212 | 75-956 | LG 278 |
| 363216 | 78-642 | LG 841 |
| 363217 | 78-003 | LG 839 |
| 363257 | 07-309 | LG 772 |
| 363264 | 78-300 | LG 833 |
| 363291 | 396-726* | LG 391 |
| 363291 | 596-344* | LG 495 |
| 363291 | 91-622 | LG 536 |
| 363291 | 96-344* | LG 536 |
| 363312 | 75-955 | LG 278 |
| 423014 | 96-324* | LG 431 |
| 423018 | 15-389 | LG 278 |
| 423029 | 91-265 | LG 431 |
| 423029 | 96-324* | LG 431 |
| 423063 | 83-010 | LG 819 |
| 423063 | 83-400 | LG 819 |
| 423173 | 96-324* | LG 431 |
| 423210 | 96-324* | LG 431 |
| 453048 | 83-011 | LG 819 |
| 453068 | 27-503 | LG 724 |
| 453081 | 45-301 | LG 804 |
| 481707 | 396-726* | LG 391 |
| 481707 | 596-344* | LG 495 |
| 481707 | 91-622 | LG 536 |
| 481707 | 96-344* | LG 536 |
| 482462 | 396-726* | LG 391 |
| 482462 | 596-344* | LG 495 |
| 482462 | 91-622 | LG 536 |
| 482462 | 96-344* | LG 536 |
| 483025 | 78-121 | LG 827 |
| 483030 | 75-031 | LG 278 |
| 483031 | 75-154 | LG 312 |
| 483035 | 91-266 | LG 431 |
| 483035 | 96-328* | LG 431 |
| 483049 | 96-328* | LG 431 |
| 483050 | 96-328* | LG 431 |
| 483053 | 15-390 | LG 278 |
| 523025 | 33-185 | LG 737 |
| 523034 | 33-028 | LG 947 |
| 523349 | 15-394 | LG 278 |
| 523366 | 15-395 | LG 278 |
| 523370 | 33-127 | LG 737 |
| 523370 | 33-185 | LG 737 |
| 543293 | 396-322* | LG 438 |
| 543293 | 596-322* | LG 438 |
| 543293 | 92-030 | LG 567 |
| 543293 | 96-322* | LG 567 |
| 543294 | 392-025* | LG 440 |
| 543294 | 596-749* | LG 433 |
| 543294 | 92-031 | LG 433 |
| 543294 | 96-749* | LG 433 |
| 583287 | 93-025 | LG 482 |
| 603035 | 591-259* | LG 438 |
| 603035 | 91-259 | LG 432 |
| 603055 | 591-259* | LG 438 |
| 603056 | 591-259* | LG 438 |
| 604035 | 591-259* | LG 438 |
| 604035 | 91-259 | LG 432 |
| 823004 | 593-601* | LG 386 |
| 823004 | 91-039 | LG 487 |
| 823004 | 93-601* | LG 432 |
| 823006 | 396-702* | LG 480 |
| 823006 | 596-702* | LG 388 |
| 823006 | 91-135 | LG 387 |
| 823006 | 96-702* | LG 491 |
| **ESKA** | | |
| 8-0011 | 75-120 | LG 300 |
| **EVERIDE** | | |
| 181026 | 592-608* | LG 434 |
| 181026 | 91-482 | LG 434 |
| 181042 | 92-607* | LG 434 |
| 191107 | 92-054 | LG 434 |

X

* OREGON® Gator™ replacement blade

# 2019 OEM X-Reference

| OEM No. | OREGON | Page |
|---|---|---|
| **EXCEL** | | |
| 039677 | 45-064 | LG 236 |
| 30866 | 91-178 | LG 471 |
| 350595 | 82-021 | LG 884 |
| 39677 | 45-064 | LG 236 |
| 631560 | 45-066 | LG 236 |
| 781039 | 33-188 | LG 738 |
| 781310 | 75-662 | LG 258 |
| 781385 | 78-023 | LG 822 |
| 781443 | 75-663 | LG 279 |
| 781856 | 78-022 | LG 827 |
| 782292 | 75-664 | LG 279 |
| 784207 | 75-665 | LG 279 |
| 784504 | 78-026 | LG 822 |
| 785030 | 60-053 | LG 708 |
| 786103 | 45-065 | LG 236 |
| 786657 | 60-054 | LG 708 |
| 789388 | 75-755 | LG 258 |
| 791335 | 75-756 | LG 279 |
| 793802 | 92-039 | LG 470 |
| 793828 | 75-757 | LG 256 |
| 793893 | 75-759 | LG 279 |
| **EXMARK** | | |
| 089046 | 91-255 | LG 454 |
| 103-0064 | 72-735 | LG 1045 |
| 103-0065 | 72-736 | LG 1045 |
| 103-0068 | 72-735 | LG 1045 |
| 103-0069 | 72-736 | LG 1045 |
| 103-0070 | 72-736 | LG 1045 |
| 103-0071 | 72-736 | LG 1045 |
| 103-0301 | 396-740* | LG 415 |
| 103-0301 | 596-319* | LG 415 |
| 103-0301 | 91-217 | LG 558 |
| 103-0301 | 91-311 | LG 439 |
| 103-0301 | 96-319* | LG 415 |
| 103-0301-B | 396-740* | LG 415 |
| 103-0301-B | 596-319* | LG 415 |
| 103-0301-B | 91-311 | LG 439 |
| 103-0301-B | 96-319* | LG 415 |
| 103-0301-M | 396-740* | LG 415 |
| 103-0301-M | 596-319* | LG 415 |
| 103-0301-M | 91-311 | LG 439 |
| 103-0301-M | 96-319* | LG 415 |
| 103-0301-S | 396-740* | LG 415 |
| 103-0301-S | 596-319* | LG 415 |
| 103-0301-S | 91-217 | LG 558 |
| 103-0301-S | 91-311 | LG 439 |
| 103-0301-S | 96-319* | LG 415 |
| 103-0431 | 86-033 | LG 781 |
| 103-0662 | 33-135 | LG 737 |
| 103-0664 | 33-115 | LG 738 |
| 103-0665 | 33-135 | LG 737 |
| 103-0665 | 33-136 | LG 737 |
| 103-0690 | 33-137 | LG 737 |
| 103-0690 | 33-153 | LG 737 |
| 103-0690 | 33-187 | LG 738 |
| 103-0881 | 75-957 | LG 282 |
| 103-0960 | 33-137 | LG 737 |
| 103-0960 | 33-153 | LG 737 |
| 103-0960 | 33-187 | LG 738 |
| 103-1140 | 82-344 | LG 885 |
| 103-1140 | 82-346 | LG 885 |
| 103-1183 | 82-346 | LG 885 |
| 103-1184 | 82-346 | LG 885 |
| 103-1224 | 72-722 | LG 1045 |
| 103-1577 | 396-716* | LG 451 |
| 103-1577 | 596-310* | LG 447 |
| 103-1577 | 96-310* | LG 444 |
| 103-1577 | 99-127 | LG 375 |
| 103-1577-S | 396-716* | LG 451 |
| 103-1577-S | 596-310* | LG 447 |
| 103-1577-S | 96-310* | LG 444 |
| 103-1577-S | 99-127 | LG 375 |
| 103-1578 | 396-726* | LG 391 |
| 103-1578 | 596-344* | LG 495 |
| 103-1578 | 91-256 | LG 437 |
| 103-1578 | 96-344* | LG 536 |
| 103-1578-S | 396-726* | LG 391 |
| 103-1578-S | 596-344* | LG 495 |
| 103-1578-S | 91-256 | LG 437 |
| 103-1578-S | 96-344* | LG 536 |
| 103-1579 | 596-327* | LG 434 |
| 103-1579 | 96-327* | LG 417 |
| 103-1579-S | 596-327* | LG 434 |
| 103-1579-S | 96-327* | LG 417 |
| 103-1580 | 396-740* | LG 415 |
| 103-1580 | 596-319* | LG 415 |
| 103-1580 | 96-319* | LG 415 |
| 103-1580-B | 396-740* | LG 415 |
| 103-1580-B | 596-319* | LG 415 |
| 103-1580-B | 96-319* | LG 415 |
| 103-1580-M | 396-740* | LG 415 |
| 103-1580-M | 596-319* | LG 415 |
| 103-1580-M | 96-319* | LG 415 |
| 103-1580-S | 396-740* | LG 415 |
| 103-1580-S | 596-319* | LG 415 |
| 103-1580-S | 91-217 | LG 558 |
| 103-1580-S | 96-319* | LG 415 |
| 103-2171 | 72-722 | LG 1045 |
| 103-2240 | 15-113 | LG 282 |
| 103-2240 | 75-113 | LG 281 |
| 103-2477 | 82-022 | LG 886 |
| 103-2507 | 396-716* | LG 451 |
| 103-2507 | 596-310* | LG 447 |
| 103-2507 | 96-310* | LG 444 |
| 103-2508 | 396-726* | LG 391 |
| 103-2508 | 596-344* | LG 495 |
| 103-2508 | 91-181 | LG 495 |
| 103-2508 | 96-344* | LG 536 |
| 103-2508-S | 396-726* | LG 391 |
| 103-2508-S | 596-344* | LG 495 |
| 103-2508-S | 91-181 | LG 495 |
| 103-2508-S | 96-344* | LG 536 |
| 103-2509 | 596-327* | LG 434 |
| 103-2509 | 96-327* | LG 417 |
| 103-2509-S | 596-327* | LG 434 |
| 103-2509-S | 96-327* | LG 417 |
| 103-2510 | 396-740* | LG 415 |
| 103-2510 | 596-319* | LG 415 |
| 103-2510 | 91-378 | LG 414 |
| 103-2510 | 96-319* | LG 415 |
| 103-2510-S | 396-740* | LG 415 |
| 103-2510-S | 596-319* | LG 415 |
| 103-2510-S | 91-378 | LG 414 |
| 103-2510-S | 96-319* | LG 415 |
| 103-2517 | 396-716* | LG 451 |
| 103-2517 | 596-310* | LG 447 |
| 103-2517 | 91-368 | LG 460 |
| 103-2517 | 96-310* | LG 444 |
| 103-2518 | 396-726* | LG 391 |
| 103-2518 | 596-344* | LG 495 |
| 103-2518 | 91-335 | LG 420 |
| 103-2518 | 96-344* | LG 536 |
| 103-2518-S | 91-181 | LG 495 |
| 103-2518-S | 91-256 | LG 437 |
| 103-2518-S | 91-312 | LG 478 |
| 103-2519 | 596-327* | LG 434 |
| 103-2519 | 91-373 | LG 383 |
| 103-2519 | 96-327* | LG 417 |
| 103-2519-S | 596-327* | LG 434 |
| 103-2519-S | 91-373 | LG 383 |
| 103-2519-S | 96-327* | LG 417 |
| 103-2527 | 396-716* | LG 451 |
| 103-2527 | 596-310* | LG 447 |
| 103-2527 | 91-313 | LG 494 |
| 103-2527 | 96-310* | LG 444 |
| 103-2528 | 396-726* | LG 391 |
| 103-2528 | 596-344* | LG 495 |
| 103-2528 | 91-312 | LG 478 |
| 103-2528 | 96-344* | LG 536 |
| 103-2529 | 596-327* | LG 434 |
| 103-2529 | 91-369 | LG 434 |
| 103-2529 | 96-327* | LG 417 |
| 103-2529-S | 596-327* | LG 434 |
| 103-2529-S | 91-369 | LG 434 |
| 103-2529-S | 96-327* | LG 417 |
| 103-2530 | 396-740* | LG 415 |
| 103-2530 | 596-319* | LG 415 |
| 103-2530 | 91-217 | LG 558 |
| 103-2530 | 91-264 | LG 473 |
| 103-2530 | 96-319* | LG 415 |
| 103-2530-B | 396-740* | LG 415 |
| 103-2530-B | 596-319* | LG 415 |
| 103-2530-B | 91-264 | LG 473 |
| 103-2530-B | 96-319* | LG 415 |
| 103-2530-M | 396-740* | LG 415 |
| 103-2530-M | 596-319* | LG 415 |
| 103-2530-M | 91-264 | LG 473 |
| 103-2530-M | 96-319* | LG 415 |
| 103-2530-S | 396-740* | LG 415 |
| 103-2530-S | 596-319* | LG 415 |
| 103-2530-S | 91-217 | LG 558 |
| 103-2530-S | 91-264 | LG 473 |
| 103-2530-S | 96-319* | LG 415 |
| 103-2531 | 91-374 | LG 442 |
| 103-2531 | 96-699* | LG 442 |
| 103-2531-B | 91-374 | LG 442 |
| 103-2531-B | 96-699* | LG 442 |
| 103-2531-M | 91-374 | LG 442 |
| 103-2531-M | 96-699* | LG 442 |
| 103-2531-S | 91-374 | LG 442 |
| 103-2531-S | 96-699* | LG 442 |
| 103-2533 | 82-022 | LG 886 |
| 103-2547 | 82-022 | LG 886 |
| 103-2548 | 82-022 | LG 886 |
| 103283 | 91-181 | LG 495 |
| 103-3037 | 48-235 | LG 886 |
| 103-3168 | 72-051 | LG 1039 |
| 103-3200 | 82-347 | LG 885 |
| 103-3200 | 82-348 | LG 885 |
| 103-3206 | 82-347 | LG 885 |
| 103-3206 | 82-348 | LG 885 |
| 103-3229 | 91-170 | LG 437 |
| 103-3231 | 396-739* | LG 479 |
| 103-3231 | 91-217 | LG 558 |
| 103-3231 | 91-264 | LG 473 |
| 103-3231 | 94-072 | LG 568 |
| 103-3232 | 91-217 | LG 558 |
| 103-3232 | 91-264 | LG 473 |
| 103-3232-S | 91-217 | LG 558 |
| 103-3232-S | 91-264 | LG 473 |
| 103-3233 | 396-739* | LG 479 |
| 103-3233 | 91-188 | LG 439 |
| 103-3233-S | 396-739* | LG 479 |
| 103-3233-S | 91-188 | LG 439 |
| 103-3246 | 33-157 | LG 738 |
| 103-3785 | 72-735 | LG 1045 |
| 103-3799 | 72-736 | LG 1045 |
| 103-3808 | 30-025 | LG 208 |
| 103-383-S | 92-025 | LG 440 |
| 103-383-S | 92-031 | LG 433 |
| 103-4014 | 115-204 | LG 282 |
| 103-4051 | 72-050 | LG 1039 |
| 103-4051 | 72-164 | LG 1040 |
| 103-4207 | 92-168 | LG 572 |
| 103-4208 | 92-167 | LG 443 |
| 103-4210 | 92-921 | LG 441 |
| 103-4689 | 72-722 | LG 1045 |
| 103-4760 | 75-235 | LG 281 |
| 103-4760 | 75-667 | LG 282 |
| 103-4761 | 15-114 | LG 282 |
| 103-5179 | 72-736 | LG 1045 |
| 103-5188 | 72-736 | LG 1045 |
| 103-5189 | 72-735 | LG 1045 |
| 103-5218 | 91-181 | LG 495 |
| 103-5218-S | 91-181 | LG 495 |
| 103-5221 | 33-002 | LG 946 |
| 103-5362 | 72-735 | LG 1045 |
| 103-5589 | 75-917 | LG 282 |
| 103-5598 | 15-398 | LG 282 |
| 103-6335 | 596-327* | LG 434 |
| 103-6335 | 96-327* | LG 417 |
| 103-6335-S | 596-327* | LG 434 |
| 103-6335-S | 96-327* | LG 417 |
| 103-6336 | 396-716* | LG 451 |
| 103-6336 | 596-310* | LG 447 |
| 103-6336 | 96-310* | LG 444 |
| 103-6336-S | 396-716* | LG 451 |
| 103-6336-S | 596-310* | LG 447 |
| 103-6336-S | 96-310* | LG 444 |
| 103-6337 | 91-181 | LG 495 |
| 103-6337-S | 396-726* | LG 391 |
| 103-6337-S | 596-344* | LG 495 |
| 103-6337-S | 96-344* | LG 536 |
| 103-6338-S | 91-217 | LG 558 |
| 103-6338-S | 91-264 | LG 473 |
| 103-6339 | 96-699* | LG 442 |
| 103-6339-S | 96-699* | LG 442 |
| 103-6381 | 396-321* | LG 562 |
| 103-6381 | 596-321* | LG 562 |
| 103-6381 | 96-321* | LG 436 |
| 103-6381-S | 396-321* | LG 562 |
| 103-6381-S | 596-321* | LG 562 |
| 103-6381-S | 96-321* | LG 436 |
| 103-6382 | 396-322* | LG 438 |
| 103-6382 | 596-322* | LG 438 |
| 103-6382 | 96-322* | LG 567 |
| 103-6382-S | 396-322* | LG 438 |
| 103-6382-S | 596-322* | LG 438 |
| 103-6382-S | 96-322* | LG 567 |
| 103-6383 | 392-025* | LG 440 |
| 103-6383 | 596-749* | LG 433 |
| 103-6383 | 92-025 | LG 440 |
| 103-6383 | 96-749* | LG 433 |
| 103-6383-S | 392-025* | LG 440 |
| 103-6383-S | 596-749* | LG 433 |
| 103-6383-S | 92-025 | LG 440 |
| 103-6383-S | 96-749* | LG 433 |
| 103-6384 | 392-057* | LG 443 |
| 103-6384 | 592-033* | LG 443 |
| 103-6384 | 92-057 | LG 442 |
| 103-6384-S | 392-057* | LG 443 |
| 103-6384-S | 592-033* | LG 443 |
| 103-6384-S | 92-057 | LG 442 |
| 103-6386-S | 92-919 | LG 435 |
| 103-6387 | 396-322* | LG 438 |
| 103-6387 | 596-322* | LG 438 |
| 103-6387 | 96-322* | LG 567 |
| 103-6387-S | 396-322* | LG 438 |
| 103-6387-S | 596-322* | LG 438 |
| 103-6387-S | 96-322* | LG 567 |
| 103-6388 | 392-025* | LG 440 |
| 103-6388 | 596-749* | LG 433 |
| 103-6388 | 92-082 | LG 433 |
| 103-6388 | 96-749* | LG 433 |
| 103-6388-S | 392-025* | LG 440 |
| 103-6388-S | 596-749* | LG 433 |
| 103-6388-S | 92-082 | LG 433 |
| 103-6388-S | 96-749* | LG 433 |
| 103-6389 | 44-501 | LG 836 |
| 103-6390 | 596-327* | LG 434 |
| 103-6390 | 91-373 | LG 383 |
| 103-6390 | 96-327* | LG 417 |
| 103-6390-S | 596-327* | LG 434 |
| 103-6390-S | 91-373 | LG 383 |
| 103-6390-S | 96-327* | LG 417 |
| 103-6391 | 396-321* | LG 562 |
| 103-6391 | 596-321* | LG 562 |
| 103-6391 | 92-026 | LG 435 |

X



* OREGON® Gator™ replacement blade

## EXMARK

| OEM No. | OREGON | Page |
|---|---|---|
| 103-6391 | 96-321* | LG 436 |
| 103-6391-S | 396-321* | LG 562 |
| 103-6391-S | 596-321* | LG 562 |
| 103-6391-S | 92-026 | LG 435 |
| 103-6391-S | 96-321* | LG 436 |
| 103-6392 | 396-322* | LG 438 |
| 103-6392 | 596-322* | LG 438 |
| 103-6392 | 92-027 | LG 432 |
| 103-6392 | 96-322* | LG 567 |
| 103-6392-S | 396-322* | LG 438 |
| 103-6392-S | 596-322* | LG 438 |
| 103-6392-S | 92-027 | LG 432 |
| 103-6392-S | 96-322* | LG 567 |
| 103-6393 | 392-025* | LG 440 |
| 103-6393 | 596-749* | LG 433 |
| 103-6393 | 92-028 | LG 433 |
| 103-6393 | 96-749* | LG 433 |
| 103-6393-S | 392-025* | LG 440 |
| 103-6393-S | 596-749* | LG 433 |
| 103-6393-S | 92-028 | LG 433 |
| 103-6393-S | 96-749* | LG 433 |
| 103-6394 | 392-057* | LG 443 |
| 103-6394 | 592-033* | LG 443 |
| 103-6394 | 92-084 | LG 442 |
| 103-6394-S | 392-057* | LG 443 |
| 103-6394-S | 592-033* | LG 443 |
| 103-6394-S | 92-084 | LG 442 |
| 103-6396 | 396-321* | LG 562 |
| 103-6396 | 596-321* | LG 562 |
| 103-6396 | 96-321* | LG 436 |
| 103-6396-S | 396-321* | LG 562 |
| 103-6396-S | 596-321* | LG 562 |
| 103-6396-S | 96-321* | LG 436 |
| 103-6397 | 396-322* | LG 438 |
| 103-6397 | 596-322* | LG 438 |
| 103-6397 | 96-322* | LG 567 |
| 103-6397-S | 396-322* | LG 438 |
| 103-6397-S | 596-322* | LG 438 |
| 103-6397-S | 96-322* | LG 567 |
| 103-6398 | 392-025* | LG 440 |
| 103-6398 | 596-749* | LG 433 |
| 103-6398 | 96-749* | LG 433 |
| 103-6398-S | 392-025* | LG 440 |
| 103-6398-S | 596-749* | LG 433 |
| 103-6398-S | 96-749* | LG 433 |
| 103-6399 | 392-057* | LG 443 |
| 103-6399 | 592-033* | LG 443 |
| 103-6399-S | 392-057* | LG 443 |
| 103-6399-S | 592-033* | LG 443 |
| 103-6400-S | 91-369 | LG 434 |
| 103-6401 | 396-321* | LG 562 |
| 103-6401 | 396-716* | LG 451 |
| 103-6401 | 596-310* | LG 447 |
| 103-6401 | 596-321* | LG 562 |
| 103-6401 | 92-029 | LG 435 |
| 103-6401 | 96-310* | LG 444 |
| 103-6401 | 96-321* | LG 436 |
| 103-6401-S | 396-321* | LG 562 |
| 103-6401-S | 396-716* | LG 451 |
| 103-6401-S | 596-310* | LG 447 |
| 103-6401-S | 596-321* | LG 562 |
| 103-6401-S | 92-029 | LG 435 |
| 103-6401-S | 96-310* | LG 444 |
| 103-6401-S | 96-321* | LG 436 |
| 103-6402 | 396-322* | LG 438 |
| 103-6402 | 596-322* | LG 438 |
| 103-6402 | 92-030 | LG 567 |
| 103-6402 | 96-322* | LG 567 |
| 103-6402-S | 396-322* | LG 438 |
| 103-6402-S | 596-322* | LG 438 |
| 103-6402-S | 92-030 | LG 567 |
| 103-6402-S | 96-322* | LG 567 |
| 103-6403 | 392-025* | LG 440 |
| 103-6403 | 596-749* | LG 433 |
| 103-6403 | 92-031 | LG 433 |
| 103-6403 | 96-749* | LG 433 |
| 103-6403-S | 392-025* | LG 440 |
| 103-6403-S | 596-749* | LG 433 |
| 103-6403-S | 92-031 | LG 433 |
| 103-6403-S | 96-749* | LG 433 |
| 103-6404 | 392-057* | LG 443 |
| 103-6404 | 592-033* | LG 443 |
| 103-6404 | 92-033 | LG 442 |
| 103-6404-S | 392-057* | LG 443 |
| 103-6404-S | 592-033* | LG 443 |
| 103-6404-S | 92-033 | LG 442 |
| 103-6461 | 92-912 | LG 436 |
| 103-6506 | 15-004 | LG 282 |
| 103-6518 | 91-313 | LG 494 |
| 103-6579 | 33-157 | LG 738 |
| 103-6580 | 396-726* | LG 391 |
| 103-6580 | 596-344* | LG 495 |
| 103-6580 | 96-344* | LG 536 |
| 103-6580-S | 396-726* | LG 391 |
| 103-6580-S | 596-344* | LG 495 |
| 103-6580-S | 96-344* | LG 536 |
| 1036581 | 91-368 | LG 460 |
| 103-6581 | 396-716* | LG 451 |
| 103-6581 | 596-310* | LG 447 |
| 103-6581 | 91-368 | LG 460 |
| 103-6581 | 96-310* | LG 444 |
| 103-6581-S | 396-716* | LG 451 |
| 103-6581-S | 596-310* | LG 447 |
| 103-6581-S | 91-368 | LG 460 |
| 103-6581-S | 96-310* | LG 444 |
| 103-6582 | 396-726* | LG 391 |
| 103-6582 | 596-344* | LG 495 |
| 103-6582 | 91-335 | LG 420 |
| 103-6582 | 96-344* | LG 536 |
| 103-6582-B | 396-726* | LG 391 |
| 103-6582-B | 596-344* | LG 495 |
| 103-6582-B | 91-335 | LG 420 |
| 103-6582-B | 96-344* | LG 536 |
| 103-6582-M | 396-726* | LG 391 |
| 103-6582-M | 596-344* | LG 495 |
| 103-6582-M | 91-335 | LG 420 |
| 103-6582-M | 96-344* | LG 536 |
| 103-6582-S | 396-726* | LG 391 |
| 103-6582-S | 596-344* | LG 495 |
| 103-6582-S | 91-335 | LG 420 |
| 103-6582-S | 96-344* | LG 536 |
| 103-6583 | 396-716* | LG 451 |
| 103-6583 | 596-310* | LG 447 |
| 103-6583 | 91-313 | LG 494 |
| 103-6583 | 96-310* | LG 444 |
| 103-6583-S | 396-716* | LG 451 |
| 103-6583-S | 596-310* | LG 447 |
| 103-6583-S | 91-313 | LG 494 |
| 103-6583-S | 96-310* | LG 444 |
| 103-6584 | 396-726* | LG 391 |
| 103-6584 | 596-344* | LG 495 |
| 103-6584 | 91-312 | LG 478 |
| 103-6584 | 96-344* | LG 536 |
| 103-6584-B | 396-726* | LG 391 |
| 103-6584-B | 596-344* | LG 495 |
| 103-6584-B | 91-312 | LG 478 |
| 103-6584-B | 96-344* | LG 536 |
| 103-6584-M | 396-726* | LG 391 |
| 103-6584-M | 596-344* | LG 495 |
| 103-6584-M | 91-312 | LG 478 |
| 103-6584-M | 96-344* | LG 536 |
| 103-6584-S | 396-726* | LG 391 |
| 103-6584-S | 596-344* | LG 495 |
| 103-6584-S | 91-312 | LG 478 |
| 103-6584-S | 96-344* | LG 536 |
| 103-6738 | 396-716* | LG 451 |
| 103-6738 | 596-310* | LG 447 |
| 103-6738 | 96-310* | LG 444 |
| 103-6738-S | 396-716* | LG 451 |
| 103-6738-S | 596-310* | LG 447 |
| 103-6738-S | 96-310* | LG 444 |
| 103-6906 | 15-399 | LG 282 |
| 103-6906-S | 15-399 | LG 282 |
| 103-7263 | 72-050 | LG 1039 |
| 103-7263 | 72-164 | LG 1040 |
| 103-7363 | 72-050 | LG 1039 |
| 103-8075 | 82-347 | LG 885 |
| 103-8075 | 82-348 | LG 885 |
| 103-8107 | 392-201* | LG 440 |
| 103-8107-S | 392-201* | LG 440 |
| 103-8239 | 392-201* | LG 440 |
| 103-8239-S | 392-201* | LG 440 |
| 103-8240 | 392-201* | LG 440 |
| 103-8240-S | 392-201* | LG 440 |
| 103-8244 | 392-201* | LG 440 |
| 103-8244 | 492-730 | LG 440 |
| 103-8244-S | 392-201* | LG 440 |
| 103-8244-S | 492-730 | LG 440 |
| 103-8250 | 392-205* | LG 436 |
| 103-8250-S | 392-205* | LG 436 |
| 103-8251 | 392-205* | LG 436 |
| 103-8251-S | 392-205* | LG 436 |
| 103-8280 | 82-022 | LG 886 |
| 103-8288 | 392-205* | LG 436 |
| 103-8288-S | 392-205* | LG 436 |
| 103-8296 | 392-205* | LG 436 |
| 103-8296-S | 392-205* | LG 436 |
| 103-8323 | 82-347 | LG 885 |
| 103-8323 | 82-348 | LG 885 |
| 103-8353 | 82-022 | LG 886 |
| 103-8370 | 392-205* | LG 436 |
| 103-8370 | 492-726 | LG 436 |
| 103-8370-S | 392-205* | LG 436 |
| 103-8370-S | 492-726 | LG 436 |
| 103-8396 | 392-201* | LG 440 |
| 103-8396-S | 392-201* | LG 440 |
| 103-8415 | 72-020 | LG 1039 |
| 103-8420 | 392-205* | LG 436 |
| 103-8420-S | 392-205* | LG 436 |
| 103-8431 | 392-201* | LG 440 |
| 103-8431-S | 392-201* | LG 440 |
| 103-8432 | 392-201* | LG 440 |
| 103-8432 | 492-730 | LG 440 |
| 103-8432-S | 392-201* | LG 440 |
| 103-8432-S | 492-730 | LG 440 |
| 103-8433 | 392-205* | LG 436 |
| 103-8433-S | 392-205* | LG 436 |
| 103-9395-S | 392-204* | LG 443 |
| 103-9539 | 82-056 | LG 886 |
| 103-9599 | 392-206* | LG 436 |
| 103-9599-S | 392-206* | LG 436 |
| 103-960 | 33-137 | LG 737 |
| 103-960 | 33-153 | LG 737 |
| 103-960 | 33-187 | LG 738 |
| 103-9600-S | 392-206* | LG 436 |
| 103-9601 | 392-206* | LG 436 |
| 103-9601 | 492-731 | LG 436 |
| 103-9601-S | 392-206* | LG 436 |
| 103-9601-S | 492-731 | LG 436 |
| 103-9605 | 392-206* | LG 436 |
| 103-9605 | 492-731 | LG 436 |
| 103-9605-S | 392-206* | LG 436 |
| 103-9605-S | 492-731 | LG 436 |
| 103-9610-S | 392-206* | LG 436 |
| 103-9612-S | 392-203* | LG 442 |
| 103-9613-S | 392-204* | LG 443 |
| 103-9614-S | 392-205* | LG 436 |
| 103-9615-S | 392-206* | LG 436 |
| 103-9616 | 392-203* | LG 442 |
| 103-9616-S | 392-203* | LG 442 |
| 103-9618 | 392-203* | LG 442 |
| 103-9618 | 492-732 | LG 442 |
| 103-9618-S | 392-203* | LG 442 |
| 103-9618-S | 492-732 | LG 442 |
| 103-9619 | 392-203* | LG 442 |
| 103-9619-S | 392-203* | LG 442 |
| 103-9620 | 392-203* | LG 442 |
| 103-9620 | 492-732 | LG 442 |
| 103-9620-S | 392-203* | LG 442 |
| 103-9620-S | 492-732 | LG 442 |
| 103-9621 | 392-203* | LG 442 |
| 103-9621-S | 392-203* | LG 442 |
| 103-9622 | 392-204* | LG 443 |
| 103-9622-S | 392-204* | LG 443 |
| 103-9624 | 392-204* | LG 443 |
| 103-9624-S | 392-204* | LG 443 |
| 103-9625 | 392-204* | LG 443 |
| 103-9625-S | 392-204* | LG 443 |
| 103-9626 | 392-204* | LG 443 |
| 103-9626-S | 392-204* | LG 443 |
| 103-9629 | 492-730 | LG 440 |
| 103-9629-S | 392-201* | LG 440 |
| 103-9630 | 392-203* | LG 442 |
| 103-9630-S | 392-203* | LG 442 |
| 103-9631 | 392-204* | LG 443 |
| 103-9631-S | 392-204* | LG 443 |
| 103-9818-S | 392-203* | LG 442 |
| 103-9818-S | 492-732 | LG 442 |
| 107-4276 | 94-017 | LG 441 |
| 107-4276-S | 94-017 | LG 441 |
| 108-0954 | 96-660* | LG 441 |
| 108-0954-03 | 96-660* | LG 441 |
| 108-0954-S | 96-660* | LG 441 |
| 108-3762-03 | 94-051 | LG 570 |
| 108-3762-03 | 96-660* | LG 441 |
| 108-3762-03P | 94-051 | LG 570 |
| 108-3762-03P | 96-660* | LG 441 |
| 108-3762-S | 94-051 | LG 570 |
| 108-3762-S | 96-660* | LG 441 |
| 109-0071 | 83-010 | LG 819 |
| 109-0071 | 83-400 | LG 819 |
| 109-0776 | 75-967 | LG 258 |
| 109-0914 | 44-504 | LG 836 |
| 109-0929 | 44-503 | LG 836 |
| 109-1023 | 44-506 | LG 836 |
| 109-2098 | 72-050 | LG 1039 |
| 109-2098 | 72-164 | LG 1040 |
| 109-2102 | 82-361 | LG 887 |
| 109-2180 | 44-501 | LG 836 |
| 109-2339 | 48-236 | LG 724 |
| 109-2584 | 75-186 | LG 281 |
| 109-2916 | 33-137 | LG 737 |
| 109-2916 | 33-153 | LG 737 |
| 109-2916 | 33-187 | LG 738 |
| 109-4180 | 83-010 | LG 819 |
| 109-4180 | 83-400 | LG 819 |
| 109-4994 | 15-115 | LG 282 |
| 109-5364 | 15-005 | LG 282 |
| 109-5396 | 392-201* | LG 440 |
| 109-5396-S | 392-201* | LG 440 |
| 109-5876 | 392-206* | LG 436 |
| 109-5876-S | 33-137 | LG 737 |
| 109-5876-S | 33-153 | LG 737 |
| 109-5876-S | 33-187 | LG 738 |
| 109-5876-S | 392-206* | LG 436 |
| 109-5878 | 392-203* | LG 442 |
| 109-5878-S | 392-203* | LG 442 |
| 109-5879 | 392-204* | LG 443 |
| 109-5879-S | 392-204* | LG 443 |
| 109-6389 | 396-716* | LG 451 |
| 109-6389 | 596-310* | LG 447 |
| 109-6389 | 96-310* | LG 444 |
| 109-6389-S | 396-716* | LG 451 |
| 109-6389-S | 596-310* | LG 447 |
| 109-6389-S | 96-310* | LG 444 |
| 109-6391 | 396-716* | LG 451 |
| 109-6391 | 596-310* | LG 447 |
| 109-6391 | 96-310* | LG 444 |
| 109-6391-S | 396-716* | LG 451 |

X

# 2019 OEM X-Reference

| OEM No. | OREGON | Page |
|---|---|---|
| **EXMARK** | | |
| 109-6391-S | 596-310* | LG 447 |
| 109-6391-S | 96-310* | LG 444 |
| 109-6460 | 392-205* | LG 436 |
| 109-6460-S | 392-205* | LG 436 |
| 109-6461-S | 392-206* | LG 436 |
| 109-6461-S | 492-731 | LG 436 |
| 109-6462-S | 92-913 | LG 438 |
| 109-6463 | 392-201* | LG 440 |
| 109-6463 | 492-730 | LG 440 |
| 109-6463-S | 392-201* | LG 440 |
| 109-6463-S | 492-730 | LG 440 |
| 109-6464 | 392-203* | LG 442 |
| 109-6464 | 492-732 | LG 442 |
| 109-6464-S | 392-203* | LG 442 |
| 109-6464-S | 492-732 | LG 442 |
| 109-6465 | 392-204* | LG 443 |
| 109-6465-S | 392-204* | LG 443 |
| 109-6465-S | 92-910 | LG 443 |
| 109-6466 | 392-201* | LG 440 |
| 109-6466 | 392-203* | LG 442 |
| 109-6466 | 392-205* | LG 436 |
| 109-6466-S | 392-201* | LG 440 |
| 109-6466-S | 392-203* | LG 442 |
| 109-6466-S | 392-205* | LG 436 |
| 109-6467 | 392-206* | LG 436 |
| 109-6467-S | 392-206* | LG 436 |
| 109-6471 | 392-204* | LG 443 |
| 109-6471-S | 392-204* | LG 443 |
| 109-6873 | 396-322* | LG 438 |
| 109-6873 | 596-322* | LG 438 |
| 109-6873 | 92-030 | LG 567 |
| 109-6873 | 96-322* | LG 567 |
| 109-6917 | 82-055 | LG 887 |
| 109-7665 | 33-157 | LG 738 |
| 109-7673 | 33-157 | LG 738 |
| 109-8070 | 15-116 | LG 283 |
| 109-8073 | 15-117 | LG 283 |
| 109-8666 | 44-505 | LG 836 |
| 109-9011 | 72-050 | LG 1039 |
| 109-9126 | 72-735 | LG 1045 |
| 109-9127 | 72-736 | LG 1045 |
| 109-927 | 33-156 | LG 738 |
| 109-9275 | 33-156 | LG 738 |
| 109-9276 | 33-137 | LG 737 |
| 109-9276 | 33-153 | LG 737 |
| 109-9276 | 33-187 | LG 738 |
| 109-9390 | 392-205* | LG 436 |
| 109-9390-S | 392-205* | LG 436 |
| 109-9391-S | 392-206* | LG 436 |
| 109-9393 | 492-730 | LG 440 |
| 109-9393-S | 392-201* | LG 440 |
| 109-9394-S | 392-203* | LG 442 |
| 109-9395-S | 96-699* | LG 442 |
| 109-9511 | 44-502 | LG 836 |
| 110-6568-03 | 596-362* | LG 441 |
| 110-6568-03 | 94-069 | LG 441 |
| 110-6568-03 | 96-362* | LG 570 |
| 115-2454-03 | 396-803* | LG 438 |
| 115-2454-03 | 94-060* | LG 438 |
| 115-2454-03 | 96-803* | LG 567 |
| 115-5059-03 | 594-078* | LG 564 |
| 115-5059-03 | 94-128 | LG 564 |
| 116-0027 | 48-232 | LG 724 |
| 116-0185 | 44-505 | LG 836 |
| 116-1611 | 33-157 | LG 738 |
| 116-1953 | 15-118 | LG 283 |
| 116-3455 | 15-119 | LG 283 |
| 116-4500 | 96-810* | LG 439 |
| 116-4500-03 | 96-810* | LG 439 |
| 116-4500-S | 96-810* | LG 439 |
| 116-4667 | 78-011 | LG 827 |
| 116-5171 | 392-057* | LG 443 |
| 116-5171 | 592-033* | LG 443 |
| 116-5171 | 596-327* | LG 434 |
| 116-5171 | 96-327* | LG 417 |
| 116-5171-S | 392-057* | LG 443 |
| 116-5171-S | 592-033* | LG 443 |
| 116-5171-S | 596-327* | LG 434 |
| 116-5171-S | 96-327* | LG 417 |
| 116-5172 | 96-699* | LG 442 |
| 116-5172-S | 96-699* | LG 442 |
| 116-5173-S | 91-217 | LG 558 |
| 116-5173-S | 91-264 | LG 473 |
| 116-5174 | 392-025* | LG 440 |
| 116-5174 | 596-749* | LG 433 |
| 116-5174 | 96-749* | LG 433 |
| 116-5174-S | 392-025* | LG 440 |
| 116-5174-S | 596-749* | LG 433 |
| 116-5174-S | 96-749* | LG 433 |
| 116-5175 | 396-322* | LG 438 |
| 116-5175 | 596-322* | LG 438 |
| 116-5175 | 96-322* | LG 567 |
| 116-5175-S | 396-322* | LG 438 |
| 116-5175-S | 596-322* | LG 438 |
| 116-5175-S | 96-322* | LG 567 |
| 116-5176 | 396-322* | LG 438 |
| 116-5176 | 596-322* | LG 438 |
| 116-5176 | 91-181 | LG 495 |
| 116-5176 | 96-322* | LG 567 |
| 116-5176-S | 396-322* | LG 438 |
| 116-5176-S | 396-726* | LG 391 |
| 116-5176-S | 596-322* | LG 438 |
| 116-5176-S | 596-344* | LG 495 |
| 116-5176-S | 96-322* | LG 567 |
| 116-5176-S | 96-344* | LG 536 |
| 116-5177 | 396-321* | LG 562 |
| 116-5177 | 596-321* | LG 562 |
| 116-5177 | 96-321* | LG 436 |
| 116-5177-S | 396-321* | LG 562 |
| 116-5177-S | 596-321* | LG 562 |
| 116-5177-S | 96-321* | LG 436 |
| 116-5178 | 396-716* | LG 451 |
| 116-5178 | 596-310* | LG 447 |
| 116-5178 | 96-310* | LG 444 |
| 116-5178-S | 396-716* | LG 451 |
| 116-5178-S | 596-310* | LG 447 |
| 116-5178-S | 96-310* | LG 444 |
| 116-5494 | 392-201* | LG 440 |
| 116-5496-S | 392-205* | LG 436 |
| 116-5497-S | 392-206* | LG 436 |
| 116-5499 | 392-201* | LG 440 |
| 116-5499-S | 392-201* | LG 440 |
| 116-5500-S | 392-203* | LG 442 |
| 116-5501 | 392-204* | LG 443 |
| 116-5501-S | 392-204* | LG 443 |
| 116-6358 | 594-601* | LG 434 |
| 116-6358-03 | 594-601* | LG 434 |
| 116-6358-S | 594-601* | LG 434 |
| 116-6893 | 15-427 | LG 282 |
| 116-7437 | 15-427 | LG 282 |
| 116-8181 | 392-025* | LG 440 |
| 116-8181 | 596-749* | LG 433 |
| 116-8181 | 96-749* | LG 433 |
| 116-8181-S | 392-025* | LG 440 |
| 116-8181-S | 596-749* | LG 433 |
| 116-8181-S | 96-749* | LG 433 |
| 116-8196 | 392-025* | LG 440 |
| 116-8196 | 596-749* | LG 433 |
| 116-8196 | 96-749* | LG 433 |
| 116-8196-S | 392-025* | LG 440 |
| 116-8196-S | 596-749* | LG 433 |
| 116-8196-S | 96-749* | LG 433 |
| 116-8502 | 92-033 | LG 442 |
| 116-8503 | 592-033* | LG 443 |
| 116-9981 | 72-050 | LG 1039 |
| 116-9981 | 72-164 | LG 1040 |
| 117-1197 | 33-334 | LG 730 |
| 117-1197 | 33-335 | LG 730 |
| 117-1197 | 33-336 | LG 730 |
| 117-5299 | 34-210 | LG 834 |
| 117-5372-03 | 596-362* | LG 441 |
| 117-5372-03 | 94-069 | LG 441 |
| 117-5372-03 | 96-362* | LG 570 |
| 119-8819 | 15-142 | LG 323 |
| 119-8820 | 15-143 | LG 323 |
| 121-4894 | 89-001 | LG 590 |
| 1-230-237 | 45-031 | LG 232 |
| 1-302013 | 43-075 | |
| 1-302030 | 82-306 | LG 874 |
| 1-302113-10 | 43-075 | |
| 1-302122 | 48-200 | LG 694 |
| 130-2861 | 92-168 | LG 572 |
| 1-303028 | 78-031 | LG 826 |
| 1-303044 | 09-804 | LG 233 |
| 1-303044 | 45-030 | LG 245 |
| 1-303044 | 45-127 | LG 244 |
| 1-303057 | 45-220 | LG 232 |
| 1-303067 | 48-211 | LG 233 |
| 1-303072 | 78-641 | LG 835 |
| 1-303073 | 78-640 | LG 835 |
| 1-303076 | 78-031 | LG 826 |
| 1-303078 | 75-240 | LG 297 |
| 1-303079 | 75-221 | LG 280 |
| 1-303080 | 75-031 | LG 278 |
| 1-303105 | 06-003 | LG 805 |
| 1-303146 | 396-726* | LG 391 |
| 1-303146 | 596-344* | LG 495 |
| 1-303146 | 91-312 | LG 478 |
| 1-303146 | 96-344* | LG 536 |
| 1-303164 | 09-802 | LG 233 |
| 1-303197 | 07-103 | LG 775 |
| 1-303200 | 45-078 | LG 230 |
| 1-303221 | 45-002 | LG 237 |
| 1-303283 | 396-726* | LG 391 |
| 1-303283 | 596-344* | LG 495 |
| 1-303283 | 91-312 | LG 478 |
| 1-303283 | 96-344* | LG 536 |
| 1-303284 | 07-317 | LG 771 |
| 1-303314 | 09-804 | LG 233 |
| 1-303495 | 396-726* | LG 391 |
| 1-303495 | 596-344* | LG 495 |
| 1-303495 | 91-335 | LG 420 |
| 1-303495 | 96-344* | LG 536 |
| 1-303499 | 75-181 | LG 280 |
| 1-303514 | 09-804 | LG 233 |
| 1-303514 | 45-030 | LG 245 |
| 1-303514 | 45-127 | LG 244 |
| 1-303527 | 396-726* | LG 391 |
| 1-303527 | 596-344* | LG 495 |
| 1-303527 | 91-256 | LG 437 |
| 1-303527 | 96-344* | LG 536 |
| 1-303543 | 45-220 | LG 232 |
| 131-3939-03 | 394-129* | LG 441 |
| 1-322110 | 43-075 | |
| 1-323051 | 75-221 | LG 280 |
| 1-323200 | 75-226 | LG 281 |
| 1-323225 | 75-227 | LG 281 |
| 1-323275 | 48-148 | LG 695 |
| 1-323285 | 34-009 | LG 821 |
| 1-323288 | 75-177 | LG 281 |
| 1-323300 | 75-113 | LG 281 |
| 1-323329 | 45-031 | LG 232 |
| 1-323344 | 15-404 | LG 279 |
| 1-323515 | 396-716* | LG 451 |
| 1-323515 | 596-310* | LG 447 |
| 1-323515 | 91-313 | LG 494 |
| 1-323515 | 96-310* | LG 444 |
| 1-323532 | 82-022 | LG 886 |
| 1-323537 | 09-802 | LG 233 |
| 1-323539 | 09-802 | LG 233 |
| 1-323722 | 75-963 | LG 281 |
| 1-323734 | 15-405 | LG 279 |
| 1323735 | 15-401 | LG 279 |
| 1-323735 | 15-401 | LG 279 |
| 1-324157 | 48-148 | LG 695 |
| 1-363173 | 45-220 | LG 232 |
| 13-6398 | 92-028 | LG 433 |
| 1-373077 | 45-104 | LG 939 |
| 1-402006 | 82-307-0 | LG 874 |
| 1-403024 | 15-408 | LG 279 |
| 1-403025 | 15-409 | LG 280 |
| 1-403026 | 396-716* | LG 451 |
| 1-403026 | 596-310* | LG 447 |
| 1-403026 | 91-313 | LG 494 |
| 1-403026 | 96-310* | LG 444 |
| 1-403059 | 396-716* | LG 451 |
| 1-403059 | 596-310* | LG 447 |
| 1-403059 | 91-313 | LG 494 |
| 1-403059 | 96-310* | LG 444 |
| 1-403075 | 396-716* | LG 451 |
| 1-403075 | 596-310* | LG 447 |
| 1-403075 | 96-310* | LG 444 |
| 1-403086 | 396-716* | LG 451 |
| 1-403086 | 596-310* | LG 447 |
| 1-403086 | 91-368 | LG 460 |
| 1-403086 | 96-310* | LG 444 |
| 1-403088 | 15-410 | LG 280 |
| 1-403105 | 15-411 | LG 280 |
| 1-403121 | 33-024 | LG 945 |
| 1-403148 | 396-716* | LG 451 |
| 1-403148 | 596-310* | LG 447 |
| 1-403148 | 91-368 | LG 460 |
| 1-403148 | 96-310* | LG 444 |
| 1-403149 | 396-716* | LG 451 |
| 1-403149 | 596-310* | LG 447 |
| 1-403149 | 96-310* | LG 444 |
| 1-403174 | 75-963 | LG 281 |
| 1-413093 | 75-230 | LG 281 |
| 1-413094 | 75-292 | LG 281 |
| 1-413096 | 75-231 | LG 281 |
| 1-413308 | 75-232 | LG 281 |
| 1-413438 | 396-716* | LG 451 |
| 1-413438 | 596-310* | LG 447 |
| 1-413438 | 96-310* | LG 444 |
| 1-413438 | 99-127 | LG 375 |
| 1-503031 | 40-703 | LG 590 |
| 1-513009 | 45-038 | LG 224 |
| 1-513016 | 82-022 | LG 886 |
| 1-513051 | 33-015 | LG 948 |
| 1513075 | 33-334 | LG 730 |
| 1-513075 | 33-334 | LG 730 |
| 1-513075 | 33-335 | LG 730 |
| 1-513075 | 33-336 | LG 730 |
| 1-513152 | 33-027 | LG 947 |
| 1-513211 | 83-010 | LG 819 |
| 1-513211 | 83-400 | LG 819 |
| 1-513336 | 45-040 | LG 249 |
| 1-513508 | 07-317 | LG 771 |
| 1-513547 | 48-009 | LG 697 |
| 1-513648 | 72-722 | LG 1045 |
| 1-513807 | 72-722 | LG 1045 |
| 1-513809 | 45-060 | LG 234 |
| 1-513810 | 45-015 | LG 233 |
| 1-513810 | 45-060 | LG 234 |
| 1-513918 | 09-804 | LG 233 |
| 1-513972 | 591-259* | LG 438 |
| 1-513972 | 91-259 | LG 432 |
| 1520843 | 91-313 | LG 494 |
| 1-523027 | 48-236 | LG 724 |
| 1-523175 | 15-412 | LG 280 |
| 1-523328 | 27-500 | LG 724 |
| -1541001 | 33-114 | LG 734 |
| 1-541003 | 33-114 | LG 734 |
| 1-541050 | 33-114 | LG 734 |
| 1-541353 | 33-114 | LG 734 |
| 1-542322 | 33-114 | LG 734 |
| 1-543028 | 15-413 | LG 280 |
| 1-543070 | 33-397 | LG 942 |
| 1-543224 | 75-113 | LG 281 |

X



* OREGON® Gator™ replacement blade

## EXMARK

| OEM No. | OREGON | Page |
|---|---|---|
| 1-543259 | 33-114 | LG 734 |
| 1-543365 | 07-317 | LG 771 |
| 1-543523 | 15-415 | LG 280 |
| 1-543548 | 15-416 | LG 280 |
| 1-543749 | 15-417 | LG 280 |
| 1-543860 | 33-114 | LG 734 |
| 1-543862 | 33-114 | LG 734 |
| 1-551054 | 33-114 | LG 734 |
| 1-583862 | 33-114 | LG 734 |
| 1602501 | 78-021 | LG 832 |
| 1-603045 | 75-114 | LG 281 |
| 1-603193 | 15-418 | LG 280 |
| 1-603283 | 396-739* | LG 479 |
| 1-603283 | 91-188 | LG 439 |
| 1-603295 | 15-419 | LG 280 |
| 1-603299 | 72-311-1 | LG 1039 |
| 1-603306 | 75-115 | LG 260 |
| 1-603306 | 75-178 | LG 281 |
| 1-603321 | 48-007 | LG 1039 |
| 1-603576 | 15-420 | LG 280 |
| 1-603582 | 15-421 | LG 280 |
| 1-603602 | 48-007 | LG 1039 |
| 1-603637 | 91-170 | LG 437 |
| 1-603718 | 27-501 | LG 724 |
| 1-603805 | 78-005 | LG 823 |
| 1-603874 | 396-739* | LG 479 |
| 1-603874 | 91-217 | LG 558 |
| 1-603874 | 91-264 | LG 473 |
| 1-603874 | 94-072 | LG 568 |
| 1-613098 | 78-006 | LG 828 |
| 1-613111 | 396-740* | LG 415 |
| 1-613111 | 596-319* | LG 415 |
| 1-613111 | 91-378 | LG 414 |
| 1-613111 | 96-319* | LG 415 |
| 1-613112 | 396-740* | LG 415 |
| 1-613112 | 596-319* | LG 415 |
| 1-613112 | 91-217 | LG 558 |
| 1-613112 | 91-311 | LG 439 |
| 1-613112 | 96-319* | LG 415 |
| 1-613204 | 45-306 | LG 804 |
| 1-631560 | 45-038 | LG 224 |
| 1-631645 | 33-115 | LG 738 |
| 1-631731 | 33-135 | LG 737 |
| 1-631732 | 33-136 | LG 737 |
| 1-633099 | 33-115 | LG 738 |
| 1-633109 | 78-011 | LG 827 |
| 1-633111 | 33-028 | LG 947 |
| 1-633127 | 75-186 | LG 281 |
| 1-633131 | 06-004 | LG 805 |
| 1-633162 | 15-424 | LG 280 |
| 1-633173 | 75-188 | LG 256 |
| 1-633366 | 75-960 | LG 257 |
| 1-633482 | 396-726* | LG 391 |
| 1-633482 | 596-344* | LG 495 |
| 1-633482 | 91-312 | LG 478 |
| 1-633482 | 96-344* | LG 536 |
| 1-633483 | 396-740* | LG 415 |
| 1-633483 | 596-319* | LG 415 |
| 1-633483 | 91-217 | LG 558 |
| 1-633483 | 91-264 | LG 473 |
| 1-633483 | 96-319* | LG 415 |
| 1-633484 | 396-726* | LG 391 |
| 1-633484 | 596-344* | LG 495 |
| 1-633484 | 91-335 | LG 420 |
| 1-633484 | 96-344* | LG 536 |
| 1-633485 | 396-726* | LG 391 |
| 1-633485 | 596-344* | LG 495 |
| 1-633485 | 91-181 | LG 495 |
| 1-633485 | 96-344* | LG 536 |
| 1-633569 | 75-234 | LG 281 |
| 1-633584 | 45-206 | LG 231 |
| 1-633585 | 45-205 | LG 228 |
| 1-633659 | 75-234 | LG 281 |
| 1-633673 | 33-002 | LG 946 |
| 1-633673-B | 33-002 | LG 946 |
| 1-633673-M | 33-002 | LG 946 |
| 1-633853 | 15-425 | LG 280 |
| 1-634619 | 82-022 | LG 886 |
| 1-634645 | 33-115 | LG 738 |
| 1-634662 | 72-735 | LG 1045 |
| 1-634972 | 82-318 | LG 884 |
| 164-1300 | 33-136 | LG 737 |
| 1-641300 | 33-136 | LG 737 |
| 1-643006 | 91-374 | LG 442 |
| 1-643006 | 96-699* | LG 442 |
| 1-643052 | 75-967 | LG 258 |
| 1-643097 | 91-374 | LG 442 |
| 1643275 | 33-317-0 | LG 729 |
| 1-643275 | 33-317-0 | LG 729 |
| 1-644092 | 82-349 | LG 886 |
| 16-4667 | 78-011 | LG 827 |
| 1-65304 | 33-137 | LG 737 |
| 1-65304 | 33-153 | LG 737 |
| 1-65304 | 33-187 | LG 738 |
| 1653048 | 33-187 | LG 738 |
| 1-653048 | 33-137 | LG 737 |
| 1-653048 | 33-153 | LG 737 |
| 1-653048 | 33-187 | LG 738 |
| 1-653101 | 596-327* | LG 434 |
| 1-653101 | 91-369 | LG 434 |
| 1-653101 | 96-327* | LG 417 |
| 1-653102 | 596-327* | LG 434 |
| 1-653102 | 91-373 | LG 383 |
| 1-653102 | 96-327* | LG 417 |
| 1-653163 | 75-235 | LG 281 |
| 1-653163 | 75-667 | LG 282 |
| 1-653178 | 596-327* | LG 434 |
| 1-653178 | 96-327* | LG 417 |
| 1-653179 | 596-327* | LG 434 |
| 1-653179 | 96-327* | LG 417 |
| 1-653292 | 33-137 | LG 737 |
| 1-653292 | 33-153 | LG 737 |
| 1-653292 | 33-187 | LG 738 |
| 1-653332 | 15-426 | LG 280 |
| 1-653333 | 15-427 | LG 282 |
| 1-653368 | 75-961 | LG 281 |
| 1-653416 | 75-917 | LG 282 |
| 1-653438 | 75-236 | LG 282 |
| 1-740275 | 33-019 | LG 948 |
| 230-237 | 45-031 | LG 232 |
| 302013 | 43-075 | |
| 302030 | 82-306 | LG 874 |
| 302122 | 48-200 | LG 694 |
| 303028 | 78-031 | LG 826 |
| 303044 | 09-804 | LG 233 |
| 303044 | 45-030 | LG 245 |
| 303044 | 45-127 | LG 244 |
| 303057 | 45-220 | LG 232 |
| 303067 | 48-211 | LG 233 |
| 303072 | 78-641 | LG 835 |
| 303073 | 78-640 | LG 835 |
| 303076 | 78-031 | LG 826 |
| 303078 | 75-240 | LG 297 |
| 303079 | 75-221 | LG 280 |
| 303080 | 75-031 | LG 278 |
| 303105 | 06-003 | LG 805 |
| 303146 | 91-181 | LG 495 |
| 303146 | 91-312 | LG 478 |
| 303164 | 09-802 | LG 233 |
| 303200 | 45-078 | LG 230 |
| 303221 | 45-002 | LG 237 |
| 303283 | 396-726* | LG 391 |
| 303283 | 596-344* | LG 495 |
| 303283 | 91-184 | LG 421 |
| 303283 | 96-344* | LG 536 |
| 303284 | 07-317 | LG 771 |
| 303314 | 09-804 | LG 233 |
| 303499 | 75-181 | LG 280 |
| 303514 | 45-030 | LG 245 |
| 303514 | 45-127 | LG 244 |
| 303527 | 396-726* | LG 391 |
| 303527 | 596-344* | LG 495 |
| 303527 | 91-256 | LG 437 |
| 303527 | 96-344* | LG 536 |
| 303543 | 45-220 | LG 232 |
| 322110 | 43-075 | |
| 323051 | 75-221 | LG 280 |
| 323200 | 75-226 | LG 281 |
| 323225 | 75-227 | LG 281 |
| 323275 | 48-148 | LG 695 |
| 323288 | 75-177 | LG 281 |
| 323300 | 75-113 | LG 281 |
| 323329 | 45-031 | LG 232 |
| 323344 | 15-404 | LG 279 |
| 323515 | 396-716* | LG 451 |
| 323515 | 596-310* | LG 447 |
| 323515 | 91-313 | LG 494 |
| 323515 | 96-310* | LG 444 |
| 323539 | 09-802 | LG 233 |
| 323734 | 15-405 | LG 279 |
| 323735 | 15-401 | LG 279 |
| 324157 | 48-148 | LG 695 |
| 363007 | 45-030 | LG 245 |
| 363173 | 45-220 | LG 232 |
| 373077 | 45-104 | LG 939 |
| 38383 | 33-027 | LG 947 |
| 402006 | 82-307-0 | LG 874 |
| 403024 | 15-408 | LG 279 |
| 403025 | 15-409 | LG 280 |
| 403059 | 91-313 | LG 494 |
| 403086 | 396-716* | LG 451 |
| 403086 | 596-310* | LG 447 |
| 403086 | 91-368 | LG 460 |
| 403086 | 96-310* | LG 444 |
| 403088 | 15-410 | LG 280 |
| 403105 | 15-411 | LG 280 |
| 403121 | 33-024 | LG 945 |
| 403148 | 396-716* | LG 451 |
| 403148 | 596-310* | LG 447 |
| 403148 | 91-368 | LG 460 |
| 403148 | 96-310* | LG 444 |
| 403149 | 396-716* | LG 451 |
| 403149 | 596-310* | LG 447 |
| 403149 | 96-310* | LG 444 |
| 403174 | 75-963 | LG 281 |
| 413093 | 75-230 | LG 281 |
| 413094 | 75-292 | LG 281 |
| 413096 | 75-231 | LG 281 |
| 413308 | 75-232 | LG 281 |
| 413438 | 99-127 | LG 375 |
| 42-1000 | 94-017 | LG 441 |
| 42-1000-S | 94-017 | LG 441 |
| 46-5650 | 34-210 | LG 834 |
| 46-6560 | 07-392 | LG 767 |
| 48473 | 78-007 | LG 833 |
| 513009 | 45-038 | LG 224 |
| 513051 | 33-015 | LG 948 |
| 513075 | 33-334 | LG 730 |
| 513075 | 33-335 | LG 730 |
| 513075 | 33-336 | LG 730 |
| 513152 | 33-027 | LG 947 |
| 513211 | 83-010 | LG 819 |
| 513211 | 83-400 | LG 819 |
| 513336 | 45-040 | LG 249 |
| 513508 | 07-317 | LG 771 |
| 513547 | 48-009 | LG 697 |
| 513648 | 72-722 | LG 1045 |
| 513809 | 45-060 | LG 234 |
| 513810 | 45-015 | LG 233 |
| 513918 | 09-804 | LG 233 |
| 513972 | 591-259* | LG 438 |
| 513972 | 91-259 | LG 432 |
| 520843S | 91-313 | LG 494 |
| 523175 | 15-412 | LG 280 |
| 54044 | 45-206 | LG 231 |
| 541001 | 33-114 | LG 734 |
| 541003 | 33-114 | LG 734 |
| 541050 | 33-114 | LG 734 |
| 541352 | 33-114 | LG 734 |
| 543028 | 15-413 | LG 280 |
| 543070 | 33-397 | LG 942 |
| 543224 | 75-113 | LG 281 |
| 543259 | 33-114 | LG 734 |
| 543365 | 07-317 | LG 771 |
| 543523 | 15-415 | LG 280 |
| 543548 | 15-416 | LG 280 |
| 543749 | 15-417 | LG 280 |
| 543860 | 33-114 | LG 734 |
| 543862 | 33-114 | LG 734 |
| 551054 | 33-114 | LG 734 |
| 603045 | 75-114 | LG 281 |
| 603193 | 15-418 | LG 280 |
| 603283 | 396-739* | LG 479 |
| 603283 | 91-188 | LG 439 |
| 603295 | 15-419 | LG 280 |
| 603299 | 72-311-1 | LG 1039 |
| 603306 | 75-115 | LG 260 |
| 603306 | 75-178 | LG 281 |
| 603321 | 48-007 | LG 1039 |
| 603576 | 15-420 | LG 280 |
| 603582 | 15-421 | LG 280 |
| 603602 | 48-007 | LG 1039 |
| 603637 | 91-170 | LG 437 |
| 603805 | 78-005 | LG 823 |
| 603874 | 396-739* | LG 479 |
| 603874 | 91-217 | LG 558 |
| 603874 | 94-072 | LG 568 |
| 613072 | 91-217 | LG 558 |
| 613072 | 91-264 | LG 473 |
| 613098 | 78-006 | LG 828 |
| 613111 | 396-740* | LG 415 |
| 613111 | 596-319* | LG 415 |
| 613111 | 91-378 | LG 414 |
| 613111 | 96-319* | LG 415 |
| 613112 | 91-264 | LG 473 |
| 613117 | 91-217 | LG 558 |
| 613250 | 91-217 | LG 558 |
| 613250 | 91-264 | LG 473 |
| 63111 | 33-028 | LG 947 |
| 631560 | 45-038 | LG 224 |
| 631645 | 33-115 | LG 738 |
| 631731 | 33-135 | LG 737 |
| 631732 | 33-136 | LG 737 |
| 633099 | 33-115 | LG 738 |
| 633109 | 78-011 | LG 827 |
| 633111 | 33-028 | LG 947 |
| 633127 | 75-186 | LG 281 |
| 633131 | 06-004 | LG 805 |
| 633162 | 15-424 | LG 280 |
| 633173 | 75-188 | LG 256 |
| 633366 | 75-960 | LG 257 |
| 633482 | 396-726* | LG 391 |
| 633482 | 596-344* | LG 495 |
| 633482 | 91-312 | LG 478 |
| 633482 | 96-344* | LG 536 |
| 633483 | 396-740* | LG 415 |
| 633483 | 596-319* | LG 415 |
| 633483 | 91-217 | LG 558 |
| 633483 | 91-264 | LG 473 |
| 633483 | 96-319* | LG 415 |
| 633484 | 396-726* | LG 391 |
| 633484 | 596-344* | LG 495 |
| 633484 | 91-335 | LG 420 |
| 633484 | 96-344* | LG 536 |
| 633485 | 396-726* | LG 391 |
| 633485 | 596-344* | LG 495 |
| 633485 | 91-181 | LG 495 |
| 633485 | 96-344* | LG 536 |
| 633569 | 75-234 | LG 281 |

* OREGON® Gator™ replacement blade

# 2019 OEM X-Reference

| OEM No. | OREGON | Page |
|---|---|---|
| **EXMARK** | | |
| 633585 | 45-205 | LG 228 |
| 633673 | 33-002 | LG 946 |
| 633853 | 15-425 | LG 280 |
| 634972 | 82-318 | LG 884 |
| 641300 | 33-136 | LG 737 |
| 643006 | 91-374 | LG 442 |
| 643006 | 96-699* | LG 442 |
| 643052 | 75-967 | LG 258 |
| 644092 | 82-349 | LG 886 |
| 653048 | 33-137 | LG 737 |
| 653048 | 33-153 | LG 737 |
| 653048 | 33-187 | LG 738 |
| 653101 | 91-369 | LG 434 |
| 653102 | 91-373 | LG 383 |
| 653163 | 75-235 | LG 281 |
| 653163 | 75-667 | LG 282 |
| 653332 | 15-426 | LG 280 |
| 653333 | 15-427 | LG 282 |
| 653368 | 75-961 | LG 281 |
| 653416 | 75-917 | LG 282 |
| 653438 | 75-236 | LG 282 |
| 68-2730 | 72-311-1 | LG 1039 |
| 740275 | 33-019 | LG 948 |
| 987249 | 33-317-0 | LG 729 |
| 98-7249 | 33-317-0 | LG 729 |
| 99-4627 | 15-827 | LG 322 |
| 99-4638 | 78-005 | LG 823 |
| BB196-369 | 45-030 | LG 245 |
| E303314 | 09-804 | LG 233 |
| E303514 | 09-804 | LG 233 |
| E303514 | 45-030 | LG 245 |
| E303514 | 45-127 | LG 244 |
| E322110 | 43-075 | |
| E323329 | 45-031 | LG 232 |
| E323515 | 396-716* | LG 451 |
| E323515 | 596-310* | LG 447 |
| E323515 | 91-313 | LG 494 |
| E323515 | 96-310* | LG 444 |
| E323539 | 09-802 | LG 233 |
| E403149 | 396-716* | LG 451 |
| E403149 | 596-310* | LG 447 |
| E403149 | 96-310* | LG 444 |
| E513152 | 33-027 | LG 947 |
| E513547 | 48-009 | LG 697 |
| E515508 | 07-317 | LG 771 |
| E613098 | 78-006 | LG 828 |
| E633482 | 396-726* | LG 391 |
| E633482 | 596-344* | LG 495 |
| E633482 | 91-312 | LG 478 |
| E633482 | 96-344* | LG 536 |
| E633485 | 396-726* | LG 391 |
| E633485 | 596-344* | LG 495 |
| E633485 | 91-181 | LG 495 |
| E633485 | 96-344* | LG 536 |
| **E-Z RAKE** | | |
| 91010 | 43-025 | LG 913 |
| **E-Z ROLL** | | |
| S335 | 75-101 | LG 269 |
| **EZ-GO** | | |
| 14153G1 | 15-428 | LG 283 |
| 1446-G1 | 30-102 | LG 220 |
| 16548G1 | 15-429 | LG 283 |
| 26414G01 | 15-430 | LG 283 |
| 27077G02 | 15-431 | LG 283 |
| 72054G01 | 15-432 | LG 283 |
| **F.D. KEES** | | |
| 363143 | 75-036 | LG 297 |
| 363144 | 75-221 | LG 280 |
| 363145 | 75-240 | LG 297 |
| 363173 | 45-220 | LG 232 |

| OEM No. | OREGON | Page |
|---|---|---|
| 483013 | 75-058 | LG 255 |
| **FARM-ETTE** | | |
| 45-29 | 75-120 | LG 300 |
| **FARWELL, OZMUN, KIRK** | | |
| 754-0230 | 75-008 | LG 301 |
| 754-0240 | 75-009 | LG 301 |
| 754-0241 | 75-012 | LG 301 |
| 754-0266 | 75-016 | LG 301 |
| 754-0293 | 75-018 | LG 301 |
| 954-0230 | 75-008 | LG 301 |
| 954-0240 | 75-009 | LG 301 |
| 954-0241 | 75-012 | LG 301 |
| 954-0241A | 75-012 | LG 301 |
| 954-0266 | 75-016 | LG 301 |
| 954-0266A | 75-016 | LG 301 |
| 954-0293 | 75-018 | LG 301 |
| **FEDERAL MART** | | |
| 754-0935 | 75-092 | LG 304 |
| 954-0935 | 75-092 | LG 304 |
| **FEDERATED DEPT. STORE** | | |
| 754-0151 | 75-004 | LG 301 |
| 754-0178 | 75-179 | LG 310 |
| 954-0151 | 75-004 | LG 301 |
| 954-0178 | 75-179 | LG 310 |
| **FERRIS** | | |
| 0050407X9 | 80-014 | LG 727 |
| 11037 | 33-031 | LG 742 |
| 14672 | 33-024 | LG 945 |
| 1520814 | 78-642 | LG 841 |
| 1520828 | 45-220 | LG 232 |
| 1520828S | 45-220 | LG 232 |
| 1520842 | 91-209 | LG 552 |
| 1520842S | 91-209 | LG 552 |
| 1520843 | 91-183 | LG 370 |
| 1520843S | 91-183 | LG 370 |
| 1520873 | 15-434 | LG 283 |
| 1521083 | 33-114 | LG 734 |
| 1521227 | 91-235 | LG 461 |
| 1521227 | 91-623 | LG 485 |
| 1521227S | 91-235 | LG 461 |
| 1521227S | 91-623 | LG 485 |
| 1521842 | 33-024 | LG 945 |
| 1522040 | 33-115 | LG 738 |
| 15225019-76 | 04-125 | LG 694 |
| 1525019-76 | 04-125 | LG 694 |
| 1530301 | 82-350 | LG 889 |
| 1541476 | 09-803 | LG 697 |
| 1541477 | 09-802 | LG 233 |
| 1541480 | 82-305 | LG 908 |
| 1541657 | 45-188 | LG 230 |
| 1541659 | 45-188 | LG 230 |
| 1550407-9 | 80-014 | LG 727 |
| 1714760 | 72-021 | LG 1040 |
| 20824 | 15-435 | LG 283 |
| 20842 | 396-727* | LG 467 |
| 20842 | 596-347* | LG 448 |
| 20842 | 91-209 | LG 552 |
| 20842 | 96-347* | LG 387 |
| 20842s | 396-727* | LG 467 |
| 20842s | 596-347* | LG 448 |
| 20842s | 91-209 | LG 552 |
| 20842s | 96-347* | LG 387 |
| 20843 | 396-716* | LG 451 |
| 20843 | 596-310* | LG 447 |
| 20843 | 91-183 | LG 370 |
| 20843 | 96-310* | LG 444 |
| 20843S | 396-716* | LG 451 |
| 20843S | 596-310* | LG 447 |
| 20843S | 91-183 | LG 370 |
| 20843S | 96-310* | LG 444 |

| OEM No. | OREGON | Page |
|---|---|---|
| 21063 | 15-436 | LG 283 |
| 21227S | 396-726* | LG 391 |
| 21227S | 596-344* | LG 495 |
| 21227S | 91-235 | LG 461 |
| 21227S | 96-344* | LG 536 |
| 21261 | 15-437 | LG 283 |
| 21297 | 75-946 | LG 283 |
| 21451 | 33-015 | LG 948 |
| 21684 | 15-438 | LG 283 |
| 21769 | 33-027 | LG 947 |
| 22061 | 75-943 | LG 283 |
| 22062 | 15-440 | LG 283 |
| 22095 | 33-028 | LG 947 |
| 22148 | 75-944 | LG 284 |
| 22182 | 33-026 | LG 947 |
| 22314 | 75-954 | LG 284 |
| 22667 | 75-945 | LG 284 |
| 30301 | 82-350 | LG 889 |
| 48112 | 396-764* | LG 537 |
| 48112 | 596-341* | LG 482 |
| 48112 | 91-627 | LG 482 |
| 48112 | 92-035 | LG 537 |
| 48112 | 96-341* | LG 446 |
| 48113 | 396-764* | LG 537 |
| 48113 | 596-341* | LG 482 |
| 48113 | 91-627 | LG 482 |
| 48113 | 92-035 | LG 537 |
| 48113 | 96-341* | LG 446 |
| 481709 | 396-764* | LG 537 |
| 481709 | 596-341* | LG 482 |
| 481709 | 91-627 | LG 482 |
| 481709 | 92-035 | LG 537 |
| 481709 | 96-341* | LG 446 |
| 481711 | 396-726* | LG 391 |
| 481711 | 596-344* | LG 495 |
| 481711 | 91-623 | LG 485 |
| 481711 | 96-344* | LG 536 |
| 481712 | 396-727* | LG 467 |
| 481712 | 596-347* | LG 448 |
| 481712 | 91-628 | LG 387 |
| 481712 | 96-347* | LG 387 |
| 5020824 | 15-435 | LG 283 |
| 5020827 | 45-243 | LG 243 |
| 5020842 | 396-727* | LG 467 |
| 5020842 | 596-347* | LG 448 |
| 5020842 | 91-209 | LG 552 |
| 5020842 | 96-347* | LG 387 |
| 5020842s | 396-727* | LG 467 |
| 5020842s | 596-347* | LG 448 |
| 5020842s | 91-209 | LG 552 |
| 5020842s | 96-347* | LG 387 |
| 5020843 | 396-716* | LG 451 |
| 5020843 | 596-310* | LG 447 |
| 5020843 | 91-183 | LG 370 |
| 5020843 | 96-310* | LG 444 |
| 5020843S | 396-716* | LG 451 |
| 5020843S | 596-310* | LG 447 |
| 5020843S | 91-183 | LG 370 |
| 5020843S | 96-310* | LG 444 |
| 5020843X2 | 396-716* | LG 451 |
| 5020843X2 | 596-310* | LG 447 |
| 5020843X2 | 91-183 | LG 370 |
| 5020843X2 | 96-310* | LG 444 |
| 5020843XS | 91-183 | LG 370 |
| 5021063 | 15-436 | LG 283 |
| 5021227 | 396-726* | LG 391 |
| 5021227 | 596-344* | LG 495 |
| 5021227 | 91-235 | LG 461 |
| 5021227 | 96-344* | LG 536 |
| 5021227S | 396-726* | LG 391 |
| 5021227S | 596-344* | LG 495 |
| 5021227S | 91-235 | LG 461 |
| 5021227S | 96-344* | LG 536 |
| 5021227X2 | 396-726* | LG 391 |
| 5021227X2 | 596-344* | LG 495 |

| OEM No. | OREGON | Page |
|---|---|---|
| 5021227X2 | 91-235 | LG 461 |
| 5021227X2 | 96-344* | LG 536 |
| 5021227XS | 91-235 | LG 461 |
| 5021261 | 15-437 | LG 283 |
| 5021297 | 75-946 | LG 283 |
| 5021357X1 | 83-011 | LG 819 |
| 5021684 | 15-438 | LG 283 |
| 5021769 | 33-027 | LG 947 |
| 5021842 | 33-024 | LG 945 |
| 5022061 | 15-016 | LG 323 |
| 5022062 | 15-440 | LG 283 |
| 5022148 | 75-944 | LG 284 |
| 5022173 | 15-120 | LG 284 |
| 5022314 | 75-954 | LG 284 |
| 5022315 | 75-954 | LG 284 |
| 5022667 | 75-945 | LG 284 |
| 5030301 | 82-350 | LG 889 |
| 5061033 | 82-350 | LG 889 |
| 5061675 | 33-027 | LG 947 |
| 5061827S | 391-608* | LG 443 |
| 5061827S | 91-608 | LG 443 |
| 5100407 | 27-504 | LG 725 |
| 5100555 | 75-954 | LG 284 |
| 5101755 | 396-727* | LG 467 |
| 5101755 | 596-347* | LG 448 |
| 5101755 | 91-209 | LG 552 |
| 5101755 | 96-347* | LG 387 |
| 5101755BM | 396-727* | LG 467 |
| 5101755BM | 596-347* | LG 448 |
| 5101755BM | 91-209 | LG 552 |
| 5101755BM | 96-347* | LG 387 |
| 5101755S | 396-727* | LG 467 |
| 5101755S | 596-347* | LG 448 |
| 5101755S | 91-209 | LG 552 |
| 5101755S | 96-347* | LG 387 |
| 5101755YP | 396-727* | LG 467 |
| 5101755YP | 596-347* | LG 448 |
| 5101755YP | 91-209 | LG 552 |
| 5101755YP | 96-347* | LG 387 |
| 5101756S | 396-726* | LG 391 |
| 5101756S | 596-344* | LG 495 |
| 5101756S | 91-312 | LG 478 |
| 5101756S | 96-344* | LG 536 |
| 5101756X2 | 396-726* | LG 391 |
| 5101756X2 | 596-344* | LG 495 |
| 5101756X2 | 91-312 | LG 478 |
| 5101756X2 | 96-344* | LG 536 |
| 5101986 | 396-716* | LG 451 |
| 5101986 | 596-310* | LG 447 |
| 5101986 | 91-313 | LG 494 |
| 5101986 | 96-310* | LG 444 |
| 5101986S | 396-716* | LG 451 |
| 5101986S | 596-310* | LG 447 |
| 5101986S | 91-313 | LG 494 |
| 5101986S | 96-310* | LG 444 |
| 5102035 | 15-121 | LG 284 |
| 5102040 | 15-122 | LG 284 |
| 5102227S | 396-731* | LG 427 |
| 5102227S | 91-609 | LG 469 |
| 5103303S | 396-716* | LG 451 |
| 5103303S | 596-310* | LG 447 |
| 5103303S | 91-368 | LG 460 |
| 5103303S | 96-310* | LG 444 |
| 5103303X2 | 396-716* | LG 451 |
| 5103303X2 | 596-310* | LG 447 |
| 5103303X2 | 91-368 | LG 460 |
| 5103303X2 | 96-310* | LG 444 |
| 5103304S | 396-726* | LG 391 |
| 5103304S | 596-344* | LG 495 |
| 5103304S | 91-335 | LG 420 |
| 5103304S | 96-344* | LG 536 |
| 5103304X2 | 396-726* | LG 391 |
| 5103304X2 | 596-344* | LG 495 |
| 5103304X2 | 91-335 | LG 420 |
| 5103304X2 | 96-344* | LG 536 |

X



* OREGON® Gator™ replacement blade

| OEM No. | OREGON | Page |
|---|---|---|
| **FERRIS** | | |
| 5103305S | 396-727* | LG 467 |
| 5103305S | 596-347* | LG 448 |
| 5103305S | 96-347* | LG 387 |
| 5103587 | 75-944 | LG 284 |
| 5103871 | 75-943 | LG 283 |
| 552172 | 45-030 | LG 245 |
| 553668 | 09-804 | LG 233 |
| 9622 | 33-024 | LG 945 |
| A48158 | 91-235 | LG 461 |
| A48185 | 396-726* | LG 391 |
| A48185 | 596-344* | LG 495 |
| A48185 | 91-623 | LG 485 |
| A48185 | 96-344* | LG 536 |
| A48304 | 396-727* | LG 467 |
| A48304 | 596-347* | LG 448 |
| A48304 | 91-628 | LG 387 |
| A48304 | 96-347* | LG 387 |
| **FIRESTONE** | | |
| 754-0145 | 75-145 | LG 300 |
| 754-0151 | 75-004 | LG 301 |
| 754-0178 | 75-179 | LG 310 |
| 754-0935 | 75-092 | LG 304 |
| 954-0145 | 75-145 | LG 300 |
| 954-0145A | 75-145 | LG 300 |
| 954-0151 | 75-004 | LG 301 |
| 954-015A | 75-145 | LG 300 |
| 954-0178 | 75-179 | LG 310 |
| 954-0935 | 75-092 | LG 304 |
| **FIX A THREAD** | | |
| 23623 | 42-061 | LG 1018 |
| **FMC** | | |
| 171-0566 | 34-005 | LG 821 |
| 171-3803 | 34-009 | LG 821 |
| 171-4742 | 78-034 | LG 822 |
| 171-5340 | 34-006 | LG 821 |
| 172-0567 | 34-030 | LG 821 |
| 172-7978 | 34-031 | LG 821 |
| 172-9440 | 34-002 | LG 821 |
| 603810 | 78-032 | LG 822 |
| **FOLEY BELSAW** | | |
| 670678 | 75-120 | LG 300 |
| **FORD** | | |
| 160191 | 91-207 | LG 447 |
| 163442 | 96-624* | LG 447 |
| 326217 | 75-208 | LG 277 |
| 330721CJ | 91-342 | LG 447 |
| 500904 | 91-342 | LG 447 |
| 84521624 | 91-207 | LG 447 |
| 8A1216B | 45-205 | LG 228 |
| 8A1217B | 45-206 | LG 231 |
| TR106637 | 90-644* | LG 561 |
| TR106637 | 91-806 | LG 447 |
| TR94D9776 | 90-644* | LG 561 |
| TR94D9776 | 91-806 | LG 447 |
| **FORD / NEW HOLLAND** | | |
| 160191 | 91-207 | LG 447 |
| 163442 | 96-624* | LG 447 |
| 330721CJ | 91-342 | LG 447 |
| 500904 | 91-342 | LG 447 |
| 84521624 | 91-207 | LG 447 |
| TR106637 | 90-644* | LG 561 |
| TR106637 | 91-806 | LG 447 |
| TR94D9776 | 90-644* | LG 561 |
| **FOREST CITY MATERIALS** | | |
| 754-0145 | 75-145 | LG 300 |
| 754-0151 | 75-004 | LG 301 |
| 754-0178 | 75-179 | LG 310 |
| 754-0201 | 75-441 | LG 334 |
| 754-0230 | 75-008 | LG 301 |
| 754-0234 | 75-441 | LG 334 |
| 754-0293 | 75-018 | LG 301 |
| 754-0935 | 75-092 | LG 304 |
| 954-0145 | 75-145 | LG 300 |
| 954-0145A | 75-145 | LG 300 |
| 954-0151 | 75-004 | LG 301 |
| 954-015A | 75-145 | LG 300 |
| 954-0178 | 75-179 | LG 310 |
| 954-0201 | 75-441 | LG 334 |
| 954-0230 | 75-008 | LG 301 |
| 954-0234 | 75-441 | LG 334 |
| 954-0293 | 75-018 | LG 301 |
| 954-0935 | 75-092 | LG 304 |
| **FRED MEYERS INC.** | | |
| 754-0145 | 75-145 | LG 300 |
| 754-0151 | 75-004 | LG 301 |
| 754-0201 | 75-441 | LG 334 |
| 754-0234 | 75-441 | LG 334 |
| 754-0935 | 75-092 | LG 304 |
| 954-0145 | 75-145 | LG 300 |
| 954-0145A | 75-145 | LG 300 |
| 954-0151 | 75-004 | LG 301 |
| 954-015A | 75-145 | LG 300 |
| 954-0201 | 75-441 | LG 334 |
| 954-0234 | 75-441 | LG 334 |
| 954-0935 | 75-092 | LG 304 |
| **FREDERICK WHOLESALE** | | |
| 754-0935 | 75-092 | LG 304 |
| 954-0935 | 75-092 | LG 304 |
| **FUJI ROBIN** | | |
| 261-65902-AO | 83-282 | LG 817 |
| 261-65902-AO | 83-402 | LG 817 |
| 531-600-5620 | 49-026 | LG 769 |
| **G. MC NEW CO.** | | |
| 754-0935 | 75-092 | LG 304 |
| 954-0935 | 75-092 | LG 304 |
| **G.A.C.** | | |
| 754-0145 | 75-145 | LG 300 |
| 954-0145 | 75-145 | LG 300 |
| 954-0145A | 75-145 | LG 300 |
| 954-015A | 75-145 | LG 300 |
| **GAMBLE SKOGMO** | | |
| 21615 | 75-111 | LG 306 |
| 21649 | 75-112 | LG 306 |
| 39456 | 75-145 | LG 300 |
| 43066 | 75-168 | LG 310 |
| 48044 | 75-179 | LG 310 |
| 754-0145 | 75-145 | LG 300 |
| 754-0151 | 75-004 | LG 301 |
| 754-0178 | 75-179 | LG 310 |
| 754-0194 | 75-090 | LG 301 |
| 754-0201 | 75-441 | LG 334 |
| 754-0230 | 75-008 | LG 301 |
| 754-0234 | 75-441 | LG 334 |
| 754-0240 | 75-009 | LG 301 |
| 754-0241 | 75-012 | LG 301 |
| 754-0266 | 75-016 | LG 301 |
| 754-0293 | 75-018 | LG 301 |
| 754-0935 | 75-092 | LG 304 |
| 954-0145 | 75-145 | LG 300 |
| 954-0145A | 75-145 | LG 300 |
| 954-0151 | 75-004 | LG 301 |
| 954-015A | 75-145 | LG 300 |
| 954-0178 | 75-179 | LG 310 |
| 954-0194 | 75-090 | LG 301 |
| 954-0201 | 75-441 | LG 334 |
| 954-0230 | 75-008 | LG 301 |
| 954-0234 | 75-441 | LG 334 |
| 954-0240 | 75-009 | LG 301 |
| 954-0241 | 75-012 | LG 301 |
| 954-0241A | 75-012 | LG 301 |
| 954-0266 | 75-016 | LG 301 |
| 954-0266A | 75-016 | LG 301 |
| 954-0293 | 75-018 | LG 301 |
| 954-0935 | 75-092 | LG 304 |
| **GATES** | | |
| 6981 | 75-208 | LG 277 |
| **GENERAC** | | |
| 070185D | 83-029 | LG 815 |
| 73111GS | 30-702 | LG 185 |
| **GENERAL POWER** | | |
| 630186 | 33-024 | LG 945 |
| **GIANT VAC** | | |
| 21536 | 396-726* | LG 391 |
| 21536 | 596-344* | LG 495 |
| 21536 | 93-006 | LG 444 |
| 21536 | 96-344* | LG 536 |
| 21537 | 396-716* | LG 451 |
| 21537 | 596-310* | LG 447 |
| 21537 | 93-005 | LG 447 |
| 21537 | 96-310* | LG 444 |
| 21538 | 396-727* | LG 467 |
| 21538 | 596-347* | LG 448 |
| 21538 | 93-008 | LG 510 |
| 21538 | 96-347* | LG 387 |
| 3021536 | 396-726* | LG 391 |
| 3021536 | 596-344* | LG 495 |
| 3021536 | 93-006 | LG 444 |
| 3021536 | 96-344* | LG 536 |
| 3021537 | 396-716* | LG 451 |
| 3021537 | 596-310* | LG 447 |
| 3021537 | 93-005 | LG 447 |
| 3021537 | 96-310* | LG 444 |
| 3021538 | 396-727* | LG 467 |
| 3021538 | 596-347* | LG 448 |
| 3021538 | 93-008 | LG 510 |
| 3021538 | 96-347* | LG 387 |
| 3021584 | 396-716* | LG 451 |
| 3021584 | 596-310* | LG 447 |
| 3021584 | 93-005 | LG 447 |
| 3021584 | 96-310* | LG 444 |
| **GIBSON CO-OP** | | |
| 754-0266 | 75-016 | LG 301 |
| 954-0266 | 75-016 | LG 301 |
| 954-0266A | 75-016 | LG 301 |
| **GILSON** | | |
| 1044 | 45-206 | LG 231 |
| 1045 | 45-002 | LG 237 |
| 1046 | 45-002 | LG 237 |
| 1140 | 45-205 | LG 228 |
| 11795 | 34-024 | LG 822 |
| 11964 | 78-034 | LG 822 |
| 18915 | 76-067-0 | LG 726 |
| 200983 | 75-208 | LG 277 |
| 207924 | 34-001 | LG 821 |
| 208918 | 72-307 | LG 1038 |
| 210453 | 72-306 | LG 1038 |
| 212655 | 33-334 | LG 730 |
| 212655 | 33-335 | LG 730 |
| 212655 | 33-336 | LG 730 |
| 229768 | 34-008 | LG 821 |
| 231290 | 78-032 | LG 822 |
| 233214 | 82-013 | LG 891 |
| 23486 | 34-031 | LG 821 |
| 236544 | 45-257 | LG 245 |
| 240247 | 82-013 | LG 891 |
| 241013 | 82-013 | LG 891 |
| 24445 | 34-038 | LG 821 |
| 31625 | 34-003 | LG 821 |
| 32222 | 76-067-0 | LG 726 |
| 36374 | 34-020 | LG 821 |
| 36457 | 33-386 | LG 942 |
| 37094 | 34-022 | LG 822 |
| 6588 | 34-009 | LG 821 |
| 7714 | 34-002 | LG 821 |
| 88213 | 82-013 | LG 891 |
| 88272 | 82-013 | LG 891 |
| **GOLDBLATTS** | | |
| 754-0935 | 75-092 | LG 304 |
| 954-0935 | 75-092 | LG 304 |
| **GOODRICH** | | |
| 754-0145 | 75-145 | LG 300 |
| 754-0151 | 75-004 | LG 301 |
| 754-0178 | 75-179 | LG 310 |
| 754-0201 | 75-441 | LG 334 |
| 754-0234 | 75-441 | LG 334 |
| 754-0935 | 75-092 | LG 304 |
| 954-0145 | 75-145 | LG 300 |
| 954-0145A | 75-145 | LG 300 |
| 954-0151 | 75-004 | LG 301 |
| 954-015A | 75-145 | LG 300 |
| 954-0178 | 75-179 | LG 310 |
| 954-0201 | 75-441 | LG 334 |
| 954-0234 | 75-441 | LG 334 |
| 954-0935 | 75-092 | LG 304 |
| **GOODYEAR** | | |
| 85810 | 75-208 | LG 277 |
| 89002 | 75-354 | LG 319 |
| 89209 | 75-005 | LG 307 |
| 89210 | 75-040 | LG 306 |
| 89211 | 75-045 | LG 307 |
| **GOODYEAR POWER EQUIP** | | |
| 754-0145 | 75-145 | LG 300 |
| 754-0151 | 75-004 | LG 301 |
| 754-0178 | 75-179 | LG 310 |
| 754-0201 | 75-441 | LG 334 |
| 754-0234 | 75-441 | LG 334 |
| 754-0240 | 75-009 | LG 301 |
| 754-0241 | 75-012 | LG 301 |
| 754-0266 | 75-016 | LG 301 |
| 754-0293 | 75-018 | LG 301 |
| 754-0935 | 75-092 | LG 304 |
| 954-0145 | 75-145 | LG 300 |
| 954-0145A | 75-145 | LG 300 |
| 954-0151 | 75-004 | LG 301 |
| 954-015A | 75-145 | LG 300 |
| 954-0178 | 75-179 | LG 310 |
| 954-0201 | 75-441 | LG 334 |
| 954-0234 | 75-441 | LG 334 |
| 954-0240 | 75-009 | LG 301 |
| 954-0241 | 75-012 | LG 301 |
| 954-0241A | 75-012 | LG 301 |
| 954-0266 | 75-016 | LG 301 |
| 954-0266A | 75-016 | LG 301 |
| 954-0293 | 75-018 | LG 301 |
| 954-0935 | 75-092 | LG 304 |
| **GRASSHOPPER** | | |
| 100934 | 69-395 | LG 206 |
| 100941 | 30-430 | LG 211 |
| 100941 | 30-846 | LG 211 |
| 10205 | 45-047 | LG 241 |
| 110080 | 45-227 | LG 234 |
| 110081 | 45-227 | LG 234 |
| 110082 | 45-025 | LG 247 |
| 110082 | 45-227 | LG 234 |
| 11193 | 45-010 | LG 238 |

X

* OREGON® Gator™ replacement blade

# 2019 OEM X-Reference

| OEM No. | OREGON | Page |
|---|---|---|
| **GRASSHOPPER** | | |
| 120050 | 45-047 | LG 241 |
| 120050 | 45-258 | LG 224 |
| 120081 | 45-225 | LG 232 |
| 122043 | 45-404 | LG 234 |
| 122044 | 45-404 | LG 234 |
| 181465 | 33-032 | LG 742 |
| 181470 | 33-035 | LG 742 |
| 183806 | 33-386 | LG 942 |
| 184082 | 33-410 | LG 947 |
| 184251 | 33-334 | LG 730 |
| 184251 | 33-335 | LG 730 |
| 184251 | 33-336 | LG 730 |
| 185530 | 33-249 | LG 731 |
| 265537 | 06-003 | LG 805 |
| 265545 | 06-004 | LG 805 |
| 265615 | 45-103 | LG 938 |
| 265615 | 45-104 | LG 939 |
| 274-2905 | 33-121 | LG 734 |
| 274-2932 | 33-117 | LG 733 |
| 282575 | 45-831 | LG 234 |
| 320231 | 396-713* | LG 577 |
| 320231 | 91-557 | LG 545 |
| 320231 | 96-343* | LG 395 |
| 320232 | 91-536 | LG 395 |
| 320233 | 396-713* | LG 577 |
| 320233 | 96-343* | LG 395 |
| 320234 | 396-713* | LG 577 |
| 320234 | 91-536 | LG 395 |
| 320234 | 96-343* | LG 395 |
| 320235 | 396-713* | LG 577 |
| 320235 | 96-343* | LG 395 |
| 320236 | 396-729* | LG 449 |
| 320236 | 596-329* | LG 578 |
| 320236 | 91-558 | LG 448 |
| 320236 | 96-329* | LG 449 |
| 320238 | 396-729* | LG 449 |
| 320238 | 596-329* | LG 578 |
| 320238 | 91-535 | LG 448 |
| 320238 | 96-329* | LG 449 |
| 320239 | 396-729* | LG 449 |
| 320239 | 596-329* | LG 578 |
| 320239 | 91-532 | LG 448 |
| 320239 | 96-329* | LG 449 |
| 320239B | 91-532 | LG 448 |
| 320239B | 91-535 | LG 448 |
| 320239B | 91-538 | LG 577 |
| 320239B | 91-558 | LG 448 |
| 320240 | 396-729* | LG 449 |
| 320240 | 596-329* | LG 578 |
| 320240 | 91-538 | LG 577 |
| 320240 | 96-329* | LG 449 |
| 320241 | 396-729* | LG 449 |
| 320241 | 596-329* | LG 578 |
| 320241 | 96-329* | LG 449 |
| 320242 | 396-712* | LG 449 |
| 320242 | 596-346* | LG 393 |
| 320242 | 91-547 | LG 449 |
| 320242 | 96-346* | LG 449 |
| 320243 | 396-712* | LG 449 |
| 320243 | 596-346* | LG 393 |
| 320243 | 91-531 | LG 393 |
| 320243 | 96-346* | LG 449 |
| 320244 | 396-712* | LG 449 |
| 320244 | 596-346* | LG 393 |
| 320244 | 91-534 | LG 578 |
| 320244 | 96-346* | LG 449 |
| 320245 | 396-712* | LG 449 |
| 320245 | 596-346* | LG 393 |
| 320245 | 91-531 | LG 393 |
| 320245 | 96-346* | LG 449 |
| 320245B | 396-712* | LG 449 |
| 320245B | 596-346* | LG 393 |
| 320245B | 91-531 | LG 393 |
| 320245B | 96-346* | LG 449 |
| 320246 | 396-712* | LG 449 |
| 320246 | 596-346* | LG 393 |
| 320246 | 91-537 | LG 578 |
| 320246 | 96-346* | LG 449 |
| 320247 | 396-712* | LG 449 |
| 320247 | 596-346* | LG 393 |
| 320247 | 91-539 | LG 393 |
| 320247 | 96-346* | LG 449 |
| 320250 | 396-778* | LG 394 |
| 320250 | 91-544 | LG 397 |
| 320250 | 96-778* | LG 394 |
| 320251 | 396-778* | LG 394 |
| 320251 | 91-533 | LG 394 |
| 320251 | 96-778* | LG 394 |
| 320252 | 396-778* | LG 394 |
| 320252 | 96-778* | LG 394 |
| 320253 | 396-778* | LG 394 |
| 320253 | 91-533 | LG 394 |
| 320253 | 96-778* | LG 394 |
| 320254 | 396-778* | LG 394 |
| 320254 | 96-778* | LG 394 |
| 320255 | 396-778* | LG 394 |
| 320255 | 91-036 | LG 450 |
| 320255 | 96-778* | LG 394 |
| 320320 | 396-713* | LG 577 |
| 320320 | 96-343* | LG 395 |
| 320321 | 396-729* | LG 449 |
| 320321 | 596-329* | LG 578 |
| 320321 | 96-329* | LG 449 |
| 320322 | 396-712* | LG 449 |
| 320322 | 596-346* | LG 393 |
| 320322 | 96-346* | LG 449 |
| 320323 | 396-778* | LG 394 |
| 320323 | 96-778* | LG 394 |
| 36778 | 45-010 | LG 238 |
| 381904 | 15-443 | LG 284 |
| 381914 | 75-144 | LG 284 |
| 38199 | 45-002 | LG 237 |
| 382025 | 15-444 | LG 284 |
| 382034 | 15-123 | LG 284 |
| 382037 | 15-445 | LG 284 |
| 382049 | 15-446 | LG 284 |
| 382064 | 15-125 | LG 284 |
| 382082 | 15-124 | LG 284 |
| 382084 | 15-125 | LG 284 |
| 382090 | 75-216 | LG 257 |
| 382093 | 15-126 | LG 284 |
| 382095 | 75-669 | LG 284 |
| 382097 | 15-127 | LG 284 |
| 382099 | 15-128 | LG 284 |
| 382777 | 15-449 | LG 284 |
| 382800 | 15-450 | LG 285 |
| 382836 | 15-451 | LG 285 |
| 388762 | 33-117 | LG 733 |
| 388766 | 33-113 | LG 740 |
| 388767 | 33-121 | LG 734 |
| 393225 | 78-021 | LG 832 |
| 393225 | 78-031 | LG 826 |
| 393312 | 78-045 | LG 828 |
| 414686 | 45-227 | LG 234 |
| 426122 | 72-133 | LG 1040 |
| 426132 | 72-133 | LG 1040 |
| 430-810 2832 | 33-410 | LG 947 |
| 483800 | 72-723 | LG 1043 |
| 483801 | 72-723 | LG 1043 |
| 483802 | 72-723 | LG 1043 |
| 483803 | 72-723 | LG 1043 |
| 484225 | 72-094 | LG 1042 |
| 6033973 | 72-723 | LG 1043 |
| 603725 | 72-134 | LG 1040 |
| 603924 | 72-723 | LG 1043 |
| 603925 | 72-723 | LG 1043 |
| 603926 | 72-723 | LG 1043 |
| 603927 | 72-723 | LG 1043 |
| 603971 | 72-723 | LG 1043 |
| 604180 | 33-117 | LG 733 |
| 604182 | 33-113 | LG 740 |
| 604796 | 33-410 | LG 947 |
| 606242 | 33-121 | LG 734 |
| 623762 | 82-352 | LG 890 |
| 623763 | 82-351 | LG 890 |
| 623781 | 82-351 | LG 890 |
| 623782 | 82-352 | LG 890 |
| 70134 | 91-531 | LG 393 |
| 70134 | 91-534 | LG 578 |
| 70134 | 91-537 | LG 578 |
| 70134 | 91-539 | LG 393 |
| 70134 | 91-547 | LG 449 |
| 833210 | 45-227 | LG 234 |
| **GRAVELY** | | |
| 00191700 | 33-130 | LG 733 |
| 00201010 | 15-030 | LG 285 |
| 00272800 | 96-040* | LG 369 |
| 00273000 | 91-183 | LG 370 |
| 00273100 | 396-806* | LG 453 |
| 00273100 | 596-817* | LG 371 |
| 00360200 | 92-152 | LG 455 |
| 00450200 | 396-809* | LG 370 |
| 00450200 | 596-816* | LG 451 |
| 00450200 | 92-153 | LG 370 |
| 00450300 | 396-806* | LG 453 |
| 00450300 | 596-817* | LG 371 |
| 00450300 | 92-151 | LG 453 |
| 009240 | 15-218 | LG 285 |
| 010900 | 30-819 | LG 205 |
| 011234 | 396-805* | LG 452 |
| 011234 | 91-242 | LG 371 |
| 0113700 | 91-005 | LG 458 |
| 0113700 | 96-041* | LG 372 |
| 01182400 | 91-005 | LG 458 |
| 01182400 | 96-041* | LG 372 |
| 0137051 | 91-005 | LG 458 |
| 0137051 | 96-041* | LG 372 |
| 014668 | 91-244 | LG 450 |
| 014668 | 96-040* | LG 369 |
| 01584500 | 92-602* | LG 455 |
| 01600500 | 96-040* | LG 369 |
| 018446 | 45-205 | LG 228 |
| 018845 | 45-206 | LG 231 |
| 018846 | 45-205 | LG 228 |
| 019332 | 30-941 | LG 219 |
| 02010100 | 15-030 | LG 285 |
| 025124 | 396-740* | LG 415 |
| 025124 | 596-319* | LG 415 |
| 025124 | 91-239 | LG 454 |
| 025124 | 91-253 | LG 415 |
| 025124 | 96-319* | LG 415 |
| 02961600 | 92-217 | LG 369 |
| 02961600 | 96-808* | LG 450 |
| 02961700 | 596-818* | LG 453 |
| 02961700 | 92-157 | LG 453 |
| 02982000 | 396-809* | LG 370 |
| 02982000 | 596-816* | LG 451 |
| 02982000 | 92-153 | LG 370 |
| 03123700 | 91-003 | LG 370 |
| 03123751 | 91-003 | LG 370 |
| 03253800 | 396-806* | LG 453 |
| 03253800 | 596-817* | LG 371 |
| 03253800 | 92-151 | LG 453 |
| 03253900 | 396-807* | LG 454 |
| 03253900 | 596-815* | LG 578 |
| 03253900 | 92-159 | LG 578 |
| 0347661046344 | 30-093 | LG 206 |
| 0347661046344 | 30-812 | LG 206 |
| 03498400 | 92-040 | LG 369 |
| 03498400 | 96-040* | LG 369 |
| 03498451 | 91-244 | LG 450 |
| 03498451 | 92-040 | LG 369 |
| 03624700 | 191-015 | LG 372 |
| 03624700 | 96-677* | LG 372 |
| 03624751 | 191-015 | LG 372 |
| 03624751 | 96-677* | LG 372 |
| 038199 | 45-002 | LG 237 |
| 041545 | 15-184 | LG 285 |
| 04159600 | 92-415 | LG 374 |
| 04159600 | 96-415* | LG 456 |
| 041599 | 15-185 | LG 285 |
| 042925 | 30-935 | LG 201 |
| 043954 | 30-080 | LG 205 |
| 044767 | 33-388 | LG 943 |
| 046998 | 396-723* | LG 413 |
| 046998 | 596-323* | LG 453 |
| 046998 | 96-323* | LG 477 |
| 046999 | 396-740* | LG 415 |
| 046999 | 596-319* | LG 415 |
| 046999 | 91-239 | LG 454 |
| 046999 | 91-253 | LG 415 |
| 046999 | 96-319* | LG 415 |
| 047685 | 91-254 | LG 456 |
| 048864 | 91-239 | LG 454 |
| 049028 | 15-151 | LG 285 |
| 049029 | 15-220 | LG 285 |
| 04916400 | 396-806* | LG 453 |
| 04916400 | 596-817* | LG 371 |
| 04919100 | 396-716* | LG 451 |
| 04919100 | 596-310* | LG 447 |
| 04919100 | 91-183 | LG 370 |
| 04919100 | 96-310* | LG 444 |
| 04920600 | 91-183 | LG 370 |
| 049270 | 15-187 | LG 285 |
| 05408000 | 45-267 | LG 235 |
| 05416000 | 45-269 | LG 227 |
| 07200026 | 15-152 | LG 264 |
| 07200027 | 15-153 | LG 286 |
| 07200028 | 15-154 | LG 286 |
| 07200030 | 15-155 | LG 264 |
| 07200032 | 15-156 | LG 286 |
| 07200036 | 15-031 | LG 287 |
| 07200038 | 15-032 | LG 287 |
| 07200039 | 15-157 | LG 286 |
| 07200116 | 15-158 | LG 286 |
| 07200433 | 15-159 | LG 286 |
| 07219600 | 15-188 | LG 285 |
| 07220600 | 15-184 | LG 285 |
| 07220700 | 15-185 | LG 285 |
| 07222300 | 15-151 | LG 285 |
| 07222400 | 15-220 | LG 285 |
| 07222700 | 15-187 | LG 285 |
| 07223100 | 15-200 | LG 285 |
| 07223800 | 15-201 | LG 285 |
| 072242 | 15-202 | LG 285 |
| 07224200 | 15-202 | LG 285 |
| 07225000 | 15-203 | LG 286 |
| 072258 | 15-222 | LG 285 |
| 07225800 | 15-222 | LG 285 |
| 072260 | 15-205 | LG 266 |
| 07226000 | 15-205 | LG 266 |
| 07234500 | 15-208 | LG 266 |
| 07234600 | 15-164 | LG 286 |
| 07234900 | 15-165 | LG 286 |
| 07235100 | 15-167 | LG 286 |
| 07238200 | 15-213 | LG 286 |
| 07239200 | 15-169 | LG 266 |
| 07239300 | 15-170 | LG 266 |
| 07239400 | 15-171 | LG 286 |
| 07240700 | 15-173 | LG 287 |
| 07241300 | 15-174 | LG 287 |
| 07241500 | 15-215 | LG 287 |
| 07241600 | 115-200 | LG 287 |
| 07241700 | 15-216 | LG 266 |
| 07241800 | 15-217 | LG 287 |
| 07242300 | 15-180 | LG 287 |
| 07242800 | 15-181 | LG 266 |
| 08779200 | 396-723* | LG 413 |

X



* OREGON® Gator™ replacement blade

| OEM No. | OREGON | Page |
|---|---|---|
| **GRAVELY** | | |
| 08779200 | 596-323* | LG 453 |
| 08779200 | 96-323* | LG 477 |
| 08779251 | 396-723* | LG 413 |
| 08779251 | 596-323* | LG 453 |
| 08779251 | 96-323* | LG 477 |
| 08781800 | 91-239 | LG 454 |
| 08781800 | 91-253 | LG 415 |
| 08781851 | 91-239 | LG 454 |
| 08781851 | 91-253 | LG 415 |
| 08861600 | 396-805* | LG 452 |
| 08861600 | 91-242 | LG 371 |
| 08866800 | 396-805* | LG 452 |
| 08898800 | 91-254 | LG 456 |
| 08898900 | 91-239 | LG 454 |
| 08898900 | 91-253 | LG 415 |
| 08899100 | 91-239 | LG 454 |
| 08899100 | 91-253 | LG 415 |
| 08899100 | 92-159 | LG 578 |
| 08899300 | 396-805* | LG 452 |
| 08899300 | 91-242 | LG 371 |
| 08899800 | 92-040 | LG 369 |
| 08899800 | 96-040* | LG 369 |
| 089046 | 91-239 | LG 454 |
| 089046 | 91-253 | LG 415 |
| 08904651 | 91-239 | LG 454 |
| 08904651 | 91-253 | LG 415 |
| 08979600 | 396-740* | LG 415 |
| 08979600 | 596-319* | LG 415 |
| 08979600 | 91-239 | LG 454 |
| 08979600 | 91-253 | LG 415 |
| 08979600 | 92-159 | LG 578 |
| 08979600 | 96-319* | LG 415 |
| 08979651 | 91-239 | LG 454 |
| 08979651 | 91-253 | LG 415 |
| 08983800 | 91-254 | LG 456 |
| 08983851 | 91-254 | LG 456 |
| 090812 | 91-239 | LG 454 |
| 090812 | 91-253 | LG 415 |
| 09081200 | 396-807* | LG 454 |
| 09081200 | 596-815* | LG 578 |
| 09081200 | 91-239 | LG 454 |
| 09081200 | 91-253 | LG 415 |
| 09081200 | 92-159 | LG 578 |
| 09082400 | 92-158 | LG 453 |
| 09225400 | 33-119-1 | LG 734 |
| 09232700 | 33-120 | LG 734 |
| 09232700 | 33-138 | LG 738 |
| 09246700 | 92-158 | LG 453 |
| 09254700 | 392-416* | LG 374 |
| 09290500 | 392-416* | LG 374 |
| 09290500 | 92-416 | LG 456 |
| 09290600 | 392-416* | LG 374 |
| 09290600 | 92-417 | LG 456 |
| 10792 | 49-101 | LG 602 |
| 10792 | 49-401 | LG 605 |
| 10900 | 30-080 | LG 205 |
| 10900 | 30-819 | LG 205 |
| 111234 | 91-242 | LG 371 |
| 11139 | 45-000 | LG 237 |
| 11193 | 45-010 | LG 238 |
| 11234 | 396-805* | LG 452 |
| 11234 | 91-242 | LG 371 |
| 11641 | 45-295 | LG 232 |
| 11824 | 33-016 | LG 789 |
| 14646 | 45-002 | LG 237 |
| 14647 | 45-002 | LG 237 |
| 14668 | 91-244 | LG 450 |
| 14668 | 92-040 | LG 369 |
| 14673P1 | 75-079 | LG 301 |
| 15373 | 30-082 | LG 205 |
| 15435 | 33-628 | LG 789 |
| 18272 | 33-395 | LG 943 |
| 18445 | 45-206 | LG 231 |
| 18446 | 45-205 | LG 228 |
| 18543 | 35-543 | LG 807 |
| 18563 | 07-400 | LG 767 |
| 18610 | 33-761 | LG 926 |
| 191700 | 33-130 | LG 733 |
| 19223 | 33-393 | LG 943 |
| 19332 | 30-941 | LG 219 |
| 20031900 | 33-332 | LG 730 |
| 20033100 | 60-220 | LG 708 |
| 20034800 | 34-034 | LG 821 |
| 20035300 | 15-218 | LG 285 |
| 20067500 | 45-010 | LG 238 |
| 201010 | 15-030 | LG 285 |
| 2010100 | 15-030 | LG 285 |
| 20259700 | 35-543 | LG 807 |
| 20299 | 30-081 | LG 205 |
| 20321000 | 60-220 | LG 708 |
| 20636900 | 72-737 | LG 1045 |
| 21060 | 34-007 | LG 826 |
| 21060 | 34-019 | LG 821 |
| 21196 | 60-220 | LG 708 |
| 21255800 | 45-002 | LG 237 |
| 21333 | 30-102 | LG 220 |
| 21391200 | 30-938 | LG 202 |
| 21391300 | 30-311 | LG 199 |
| 21391300 | 30-804 | LG 199 |
| 21391300 | 69-031 | LG 199 |
| 21465500 | 33-401 | LG 732 |
| 21495800 | 30-018 | LG 198 |
| 21495900 | 30-018 | LG 198 |
| 21496000 | 30-018 | LG 198 |
| 21511300 | 45-010 | LG 238 |
| 21527800 | 07-062 | LG 775 |
| 21536000 | 30-527 | LG 202 |
| 25124 | 91-239 | LG 454 |
| 25124 | 91-253 | LG 415 |
| 273000 | 91-183 | LG 370 |
| 27892 | 78-032 | LG 822 |
| 2961700 | 92-157 | LG 453 |
| 2982000 | 92-153 | LG 370 |
| 3115200 | 33-393 | LG 943 |
| 32492 | 33-401 | LG 732 |
| 3253800 | 92-151 | LG 453 |
| 3253900 | 92-159 | LG 578 |
| 34286 | 34-023 | LG 822 |
| 3454900 | 33-384 | LG 947 |
| 34766 | 30-093 | LG 206 |
| 34984 | 92-040 | LG 369 |
| 3498400 | 91-244 | LG 450 |
| 3498400 | 92-040 | LG 369 |
| 3498451 | 91-244 | LG 450 |
| 3498451 | 92-040 | LG 369 |
| 355100 | 33-334 | LG 730 |
| 3551000 | 33-334 | LG 730 |
| 360200 | 92-152 | LG 455 |
| 36778 | 45-010 | LG 238 |
| 37526 | 45-002 | LG 237 |
| 37527 | 45-002 | LG 237 |
| 37797 | 72-737 | LG 1045 |
| 37823 | 45-010 | LG 238 |
| 38199 | 45-002 | LG 237 |
| 38947 | 91-255 | LG 454 |
| 389900 | 33-120 | LG 734 |
| 389900 | 33-138 | LG 738 |
| 39128 | 83-300 | LG 819 |
| 39306 | 83-300 | LG 819 |
| 40216 | 33-317-0 | LG 729 |
| 41545 | 15-184 | LG 285 |
| 41599 | 15-185 | LG 285 |
| 42925 | 30-935 | LG 201 |
| 42926 | 30-810 | LG 198 |
| 432100 | 33-317-0 | LG 729 |
| 432101 | 33-317-0 | LG 729 |
| 43954 | 30-080 | LG 205 |
| 44063 | 49-700 | LG 605 |
| 44766 | 33-334 | LG 730 |
| 44766 | 33-335 | LG 730 |
| 44766 | 33-336 | LG 730 |
| 44767 | 33-388 | LG 943 |
| 44941 | 45-303 | LG 804 |
| 450200 | 92-153 | LG 370 |
| 450300 | 92-151 | LG 453 |
| 45071 | 33-334 | LG 730 |
| 45071 | 33-335 | LG 730 |
| 45071 | 33-336 | LG 730 |
| 45205 | 72-737 | LG 1045 |
| 45848 | 33-384 | LG 947 |
| 46999 | 91-239 | LG 454 |
| 46999 | 91-253 | LG 415 |
| 47685 | 91-254 | LG 456 |
| 48864 | 91-239 | LG 454 |
| 48864 | 91-253 | LG 415 |
| 49029 | 15-220 | LG 285 |
| 4919100 | 91-183 | LG 370 |
| 4920600 | 91-183 | LG 370 |
| 49270 | 15-187 | LG 285 |
| 51213 | 15-188 | LG 285 |
| 51510000 | 82-040 | LG 890 |
| 52586 | 72-737 | LG 1045 |
| 53507600 | 33-388 | LG 943 |
| 5404400 | 45-206 | LG 231 |
| 5404500 | 45-205 | LG 228 |
| 5408900 | 45-010 | LG 238 |
| 5415100 | 45-010 | LG 238 |
| 5416200 | 45-010 | LG 238 |
| 58903200 | 72-737 | LG 1045 |
| 59201000 | 82-041 | LG 890 |
| 59202600 | 82-042 | LG 891 |
| 59215400 | 82-042 | LG 891 |
| 59215500 | 82-041 | LG 890 |
| 61527600 | 82-040 | LG 890 |
| 61543800 | 82-040 | LG 890 |
| 69207500 | 82-042 | LG 891 |
| 69219700 | 82-042 | LG 891 |
| 7130100 | 72-737 | LG 1045 |
| 715026 | 91-183 | LG 370 |
| 7200036 | 15-031 | LG 287 |
| 7200038 | 15-032 | LG 287 |
| 7200435 | 15-160 | LG 253 |
| 72023 | 15-221 | LG 265 |
| 72052 | 15-190 | LG 265 |
| 72081 | 15-192 | LG 265 |
| 72098 | 15-193 | LG 266 |
| 72130 | 15-194 | LG 265 |
| 72131 | 15-195 | LG 265 |
| 72231 | 15-200 | LG 285 |
| 72238 | 15-201 | LG 285 |
| 72242 | 15-202 | LG 285 |
| 72258 | 15-222 | LG 285 |
| 72260 | 15-205 | LG 266 |
| 72345 | 15-208 | LG 266 |
| 7235500 | 15-210 | LG 266 |
| 72363 | 15-211 | LG 266 |
| 72382 | 15-213 | LG 286 |
| 7241500 | 15-215 | LG 287 |
| 7241600 | 115-200 | LG 287 |
| 7241700 | 15-216 | LG 266 |
| 7241800 | 15-217 | LG 287 |
| 7242000 | 15-179 | LG 287 |
| 7275 | 33-320-0 | LG 731 |
| 7277 | 33-332 | LG 730 |
| 7314800 | 34-007 | LG 826 |
| 7327800 | 34-023 | LG 822 |
| 79-117 | 91-308 | LG 467 |
| 8226 | 60-220 | LG 708 |
| 8707900 | 07-400 | LG 767 |
| 8763700 | 45-303 | LG 804 |
| 8781800 | 91-239 | LG 454 |
| 8781800 | 91-253 | LG 415 |
| 8781851 | 91-239 | LG 454 |
| 8781851 | 91-253 | LG 415 |
| 886151 | 91-242 | LG 371 |
| 88616 | 91-242 | LG 371 |
| 8861600 | 91-242 | LG 371 |
| 8898800 | 91-254 | LG 456 |
| 8898900 | 91-239 | LG 454 |
| 8898900 | 91-253 | LG 415 |
| 8899100 | 91-239 | LG 454 |
| 8899100 | 91-253 | LG 415 |
| 8899100 | 92-159 | LG 578 |
| 8899300 | 91-242 | LG 371 |
| 8899800 | 91-244 | LG 450 |
| 8899800 | 92-040 | LG 369 |
| 89046 | 91-239 | LG 454 |
| 89046 | 91-253 | LG 415 |
| 8904651 | 91-239 | LG 454 |
| 8904651 | 91-253 | LG 415 |
| 89796 | 91-239 | LG 454 |
| 89796 | 91-253 | LG 415 |
| 8979600 | 91-239 | LG 454 |
| 8979600 | 91-253 | LG 415 |
| 8979600 | 92-159 | LG 578 |
| 8979651 | 396-740* | LG 415 |
| 8979651 | 596-319* | LG 415 |
| 8979651 | 91-239 | LG 454 |
| 8979651 | 91-253 | LG 415 |
| 8979651 | 96-319* | LG 415 |
| 89838 | 91-254 | LG 456 |
| 8983800 | 91-254 | LG 456 |
| 8983851 | 91-254 | LG 456 |
| 90812 | 91-239 | LG 454 |
| 90812 | 91-253 | LG 415 |
| 9081200 | 91-239 | LG 454 |
| 9081200 | 91-253 | LG 415 |
| 9081200 | 92-159 | LG 578 |
| 9082400 | 92-158 | LG 453 |
| 9225400 | 33-119-1 | LG 734 |
| 9231 | 34-034 | LG 821 |
| 9232700 | 33-120 | LG 734 |
| 9232700 | 33-138 | LG 738 |
| 9239400 | 82-041 | LG 890 |
| 9240 | 15-218 | LG 285 |
| 9245 | 45-002 | LG 237 |
| 9246 | 45-002 | LG 237 |
| 9246700 | 92-158 | LG 453 |
| 92537 | 72-135 | LG 1040 |
| 9253700 | 72-135 | LG 1040 |
| 9266700 | 33-120 | LG 734 |
| 9266700 | 33-138 | LG 738 |
| AM103052 | 45-303 | LG 804 |
| C046998 | 396-723* | LG 413 |
| C046998 | 596-323* | LG 453 |
| C046998 | 96-323* | LG 477 |
| CO45205 | 72-737 | LG 1045 |
| D18036 | 91-308 | LG 467 |
| D18037 | 91-235 | LG 461 |
| D18086 | 92-207 | LG 456 |
| E-6247 | 33-119-1 | LG 734 |
| GDU10230 | 396-735* | LG 452 |
| GDU10230 | 596-308* | LG 548 |
| GDU10230 | 92-207 | LG 456 |
| GDU10230 | 96-308* | LG 456 |
| GDU10231 | 396-806* | LG 453 |
| GDU10231 | 596-817* | LG 371 |
| GDU10231 | 91-235 | LG 461 |
| GDU10232 | 396-727* | LG 467 |
| GDU10232 | 596-347* | LG 448 |
| GDU10232 | 91-308 | LG 467 |
| GDU10232 | 96-347* | LG 387 |
| PC005 | 91-308 | LG 467 |
| PL4207 | 91-308 | LG 467 |
| TCU18744 | 72-032 | LG 1038 |
| TCU18848 | 15-033 | LG 287 |

X

* OREGON® Gator™ replacement blade

# 2019 OEM X-Reference

| OEM No. | OREGON | Page |
|---|---|---|
| **GRAZER** | | |
| 900-5005 | 30-101 | LG 179 |
| **GREAT DANE** | | |
| 18032 | 78-300 | LG 833 |
| D118348 | 75-670 | LG 288 |
| D18004 | 15-452 | LG 287 |
| D18005 | 15-453 | LG 287 |
| D18006 | 15-454 | LG 287 |
| D18007 | 15-455 | LG 287 |
| D18030 | 82-328 | LG 891 |
| D18036 | 396-727* | LG 467 |
| D18036 | 596-347* | LG 448 |
| D18036 | 91-308 | LG 467 |
| D18036 | 96-347* | LG 387 |
| D18037 | 396-726* | LG 391 |
| D18037 | 596-344* | LG 495 |
| D18037 | 91-235 | LG 461 |
| D18037 | 96-344* | LG 536 |
| D18086 | 396-735* | LG 452 |
| D18086 | 596-308* | LG 548 |
| D18086 | 92-207 | LG 456 |
| D18086 | 96-308* | LG 456 |
| D18087 | 15-457 | LG 287 |
| D18088 | 15-458 | LG 287 |
| D18090 | 33-024 | LG 945 |
| D18303 | 75-671 | LG 287 |
| D18348 | 75-670 | LG 288 |
| D18361 | 15-459 | LG 288 |
| D28028 | 75-242 | LG 288 |
| D28029 | 75-243 | LG 288 |
| D28030 | 15-460 | LG 288 |
| D28031 | 15-461 | LG 288 |
| D28125 | 15-462 | LG 288 |
| D28241 | 15-463 | LG 288 |
| D38085 | 33-027 | LG 947 |
| GDA10122 | 33-120 | LG 734 |
| GDA10122 | 33-138 | LG 738 |
| GDU10025 | 15-464 | LG 288 |
| GDU10228 | 15-465 | LG 288 |
| GDU10230 | 396-735* | LG 452 |
| GDU10230 | 596-308* | LG 548 |
| GDU10230 | 92-207 | LG 456 |
| GDU10230 | 96-308* | LG 456 |
| GDU10231 | 396-726* | LG 391 |
| GDU10231 | 596-344* | LG 495 |
| GDU10231 | 91-235 | LG 461 |
| GDU10231 | 96-344* | LG 536 |
| GDU10232 | 396-727* | LG 467 |
| GDU10232 | 596-347* | LG 448 |
| GDU10232 | 91-308 | LG 467 |
| GDU10232 | 96-347* | LG 387 |
| TCU18847 | 15-466 | LG 288 |
| TCU18849 | 15-467 | LG 288 |
| **GREEN MACHINE** | | |
| 160611 | 49-812 | LG 612 |
| 160612 | 49-816 | LG 612 |
| 167218 | 55-342 | LG 627 |
| 167304 | 55-820 | LG 935 |
| 170133 | 55-333 | LG 633 |
| 176304 | 55-800 | LG 934 |
| 180601 | 49-812 | LG 612 |
| 180602 | 55-342 | LG 627 |
| 190025 | 55-252 | LG 1019 |
| 190061 | 49-021 | LG 629 |
| 190111 | 55-252 | LG 1019 |
| 210036 | 49-812 | LG 612 |
| 237001 | 40-140 | LG 584 |
| 247223 | 49-020 | LG 631 |
| 287204 | 55-342 | LG 627 |
| 300285 | 43-685 | LG 936 |
| 309891 | 55-231 | LG 212 |
| 4467213 | 49-027 | LG 769 |
| 467213 | 49-027 | LG 769 |
| 467220 | 55-342 | LG 627 |
| 760605 | 49-835 | LG 611 |
| **H.W.I.** | | |
| 754-0145 | 75-145 | LG 300 |
| 754-0151 | 75-004 | LG 301 |
| 754-0201 | 75-441 | LG 334 |
| 754-0230 | 75-008 | LG 301 |
| 754-0234 | 75-441 | LG 334 |
| 754-0240 | 75-009 | LG 301 |
| 754-0241 | 75-012 | LG 301 |
| 754-0266 | 75-016 | LG 301 |
| 754-0935 | 75-092 | LG 304 |
| 954-0145 | 75-145 | LG 300 |
| 954-0145A | 75-145 | LG 300 |
| 954-0151 | 75-004 | LG 301 |
| 954-015A | 75-145 | LG 300 |
| 954-0201 | 75-441 | LG 334 |
| 954-0230 | 75-008 | LG 301 |
| 954-0234 | 75-441 | LG 334 |
| 954-0240 | 75-009 | LG 301 |
| 954-0241 | 75-012 | LG 301 |
| 954-0241A | 75-012 | LG 301 |
| 954-0266 | 75-016 | LG 301 |
| 954-0266A | 75-016 | LG 301 |
| 954-0935 | 75-092 | LG 304 |
| **HABAN** | | |
| 3042 | 34-023 | LG 822 |
| **HAHN ECLIPSE** | | |
| 451179 | 34-008 | LG 821 |
| 451182 | 34-005 | LG 821 |
| 451293 | 34-012 | LG 821 |
| **HECHINGER CO.** | | |
| 754-0145 | 75-145 | LG 300 |
| 754-0151 | 75-004 | LG 301 |
| 754-0201 | 75-441 | LG 334 |
| 754-0230 | 75-008 | LG 301 |
| 754-0234 | 75-441 | LG 334 |
| 754-0240 | 75-009 | LG 301 |
| 754-0241 | 75-012 | LG 301 |
| 754-0266 | 75-016 | LG 301 |
| 754-0293 | 75-018 | LG 301 |
| 754-0935 | 75-092 | LG 304 |
| 954-0145 | 75-145 | LG 300 |
| 954-0145A | 75-145 | LG 300 |
| 954-0151 | 75-004 | LG 301 |
| 954-015A | 75-145 | LG 300 |
| 954-0201 | 75-441 | LG 334 |
| 954-0230 | 75-008 | LG 301 |
| 954-0234 | 75-441 | LG 334 |
| 954-0240 | 75-009 | LG 301 |
| 954-0241 | 75-012 | LG 301 |
| 954-0241A | 75-012 | LG 301 |
| 954-0266 | 75-016 | LG 301 |
| 954-0266A | 75-016 | LG 301 |
| 954-0293 | 75-018 | LG 301 |
| 954-0935 | 75-092 | LG 304 |
| **HOFFCO** | | |
| 211325S | 55-252 | LG 1019 |
| 211844H | 49-026 | LG 769 |
| 213125S | 55-252 | LG 1019 |
| 214802S | 43-532 | LG 936 |
| 215688S | 55-807 | LG 994 |
| **HOME DEPOT** | | |
| 232408 | 92-615* | LG 491 |
| 261086 | 198-058 | LG 517 |
| 261808 | 98-095 | LG 521 |
| 269480 | 198-049 | LG 518 |
| 525263 | 98-085 | LG 561 |
| **HOMELITE** | | |
| 00513 | 49-835 | LG 611 |
| 01201 | 49-020 | LG 631 |
| 01201 | 49-027 | LG 769 |
| 03310 | 49-835 | LG 611 |
| 04194 | 49-812 | LG 612 |
| 06315 | 49-816 | LG 612 |
| 08832-01 | 55-255 | LG 1019 |
| 08832-02 | 55-256 | LG 1019 |
| 110590 | 56-001 | LG 687 |
| 1201 | 49-020 | LG 631 |
| 1201 | 49-027 | LG 769 |
| 12279 | 49-833 | LG 611 |
| 12279-A | 49-833 | LG 611 |
| 12925 | 49-834 | LG 611 |
| 174323 | 75-361 | LG 254 |
| 17675 | 42-061 | LG 1018 |
| 304393 | 75-120 | LG 300 |
| 308044002 | 55-741 | LG 1019 |
| 308055002 | 55-256 | LG 1019 |
| 3310 | 49-835 | LG 611 |
| 4194 | 49-812 | LG 612 |
| 48533 | 49-833 | LG 611 |
| 48533-A | 49-833 | LG 611 |
| 49422 | 07-200 | LG 778 |
| 513 | 49-835 | LG 611 |
| 587741 | 55-211 | LG 191 |
| 6315 | 49-816 | LG 612 |
| 63589-A | 55-211 | LG 191 |
| 63718 | 07-004 | LG 769 |
| 63744 A | 07-008 | LG 762 |
| 63744A | 07-008 | LG 762 |
| 63745 A | 07-008 | LG 762 |
| 63745A | 07-008 | LG 762 |
| 64083 | 07-201 | LG 779 |
| 64083-1 | 07-201 | LG 779 |
| 64229 | 49-021 | LG 629 |
| 64243 | 55-342 | LG 627 |
| 64246 | 49-834 | LG 611 |
| 65482 | 55-333 | LG 633 |
| 67020 | 49-834 | LG 611 |
| 67021 | 49-834 | LG 611 |
| 67197 | 49-834 | LG 611 |
| 67369 | 49-807 | LG 611 |
| 67369-A | 49-807 | LG 611 |
| 67384 | 49-833 | LG 611 |
| 68034 | 49-833 | LG 611 |
| 68350 | 49-834 | LG 611 |
| 69141 | 55-610 | LG 191 |
| 69141D | 55-610 | LG 191 |
| 69254 | 56-001 | LG 687 |
| 69254 1A | 56-001 | LG 687 |
| 69254 2 | 56-001 | LG 687 |
| 69254-1 | 56-001 | LG 687 |
| 69254-1A | 56-001 | LG 687 |
| 69434 | 49-833 | LG 611 |
| 69451 | 07-004 | LG 769 |
| 69634 | 49-834 | LG 611 |
| 69635 | 49-834 | LG 611 |
| 69681 | 55-207 | LG 191 |
| 70202 | 49-833 | LG 611 |
| 70203 | 49-807 | LG 611 |
| 70310-98 | 07-266 | LG 761 |
| 70343 | 49-833 | LG 611 |
| 70655 | 49-833 | LG 611 |
| 70679 | 49-834 | LG 611 |
| 70809 | 49-834 | LG 611 |
| 70811 | 49-810 | LG 612 |
| 80220 2 | 56-001 | LG 687 |
| 883201 | 55-255 | LG 1019 |
| 883202 | 55-256 | LG 1019 |
| 93006 | 49-810 | LG 612 |
| 93195 | 49-833 | LG 611 |
| 93195-A | 49-833 | LG 611 |
| 93197 | 49-833 | LG 611 |
| 93197-A | 49-833 | LG 611 |
| 93198 | 49-833 | LG 611 |
| 93198-A | 49-833 | LG 611 |
| 93200 | 49-833 | LG 611 |
| 93200-B | 49-833 | LG 611 |
| 93203 | 49-833 | LG 611 |
| 93205 | 49-833 | LG 611 |
| 93205-A | 49-833 | LG 611 |
| 93214 | 49-833 | LG 611 |
| 93293-A | 49-833 | LG 611 |
| 93753 | 49-833 | LG 611 |
| 93758 | 49-833 | LG 611 |
| 94056 | 49-833 | LG 611 |
| 94061 | 49-833 | LG 611 |
| 94061-A | 49-833 | LG 611 |
| 94275 | 49-833 | LG 611 |
| 94549 | 49-816 | LG 612 |
| 94549-B | 49-816 | LG 612 |
| 94550 | 49-812 | LG 612 |
| 94701 | 49-807 | LG 611 |
| 94702 | 49-833 | LG 611 |
| 94876 | 49-810 | LG 612 |
| 94877 | 49-834 | LG 611 |
| 95341 | 49-833 | LG 611 |
| 95688 | 49-833 | LG 611 |
| 95894 | 49-814 | LG 614 |
| 96443 | 49-816 | LG 612 |
| 96444 | 49-812 | LG 612 |
| 96543 | 49-816 | LG 612 |
| 96625 | 49-816 | LG 612 |
| 96639 | 07-200 | LG 778 |
| 966391 | 07-200 | LG 778 |
| 96943 | 49-816 | LG 612 |
| 96944 | 49-812 | LG 612 |
| 96986 | 49-831 | LG 612 |
| 96986-A | 49-831 | LG 612 |
| 96988 | 49-812 | LG 612 |
| 96989 | 49-816 | LG 612 |
| 97133 | 49-814 | LG 614 |
| 97136 | 49-833 | LG 611 |
| 97519 | 49-816 | LG 612 |
| 97768A | 55-811 | LG 933 |
| 97768-A | 55-811 | LG 933 |
| 97768-B | 55-811 | LG 933 |
| 97823 | 49-833 | LG 611 |
| 97824 | 49-807 | LG 611 |
| 97942 | 49-021 | LG 629 |
| 98001 | 49-833 | LG 611 |
| 98006 | 49-812 | LG 612 |
| 98014 | 49-833 | LG 611 |
| 98045 | 49-816 | LG 612 |
| 98543 | 49-812 | LG 612 |
| 98550-43 | 55-342 | LG 627 |
| 98550-58 | 49-021 | LG 629 |
| 98551-38 | 49-812 | LG 612 |
| 98630 | 49-810 | LG 612 |
| 98631 | 49-807 | LG 611 |
| 98760 | 55-611 | LG 192 |
| 98770A | 55-813 | LG 933 |
| 98866A | 55-821 | LG 988 |
| 98889 | 49-833 | LG 611 |
| A 00288 | 49-817-0 | LG 616 |
| A 00440 | 56-001 | LG 687 |
| A-00285 | 49-812 | LG 612 |
| A-00285-A | 49-812 | LG 612 |
| A-00286-B | 49-831 | LG 612 |
| A00288 | 49-817-0 | LG 616 |
| A00440 | 56-001 | LG 687 |
| A-00964 | 49-833 | LG 611 |
| A00982B | 55-124 | LG 771 |
| A01195A | 49-028 | LG 769 |
| A-02588 | 49-812 | LG 612 |
| A-02620 | 49-831 | LG 612 |
| A-02895 | 49-831 | LG 612 |
| A-02911 | 49-831 | LG 612 |

X



* OREGON® Gator™ replacement blade

| OEM No. | OREGON | Page |
|---|---|---|
| **HOMELITE** | | |
| A03006 | 55-255 | LG 1019 |
| A-03034 | 49-831 | LG 612 |
| A-03310 | 49-835 | LG 611 |
| A-03878 | 49-831 | LG 612 |
| A-03920 | 49-816 | LG 612 |
| A-03921 | 49-816 | LG 612 |
| A-04041 | 49-812 | LG 612 |
| A-04042 | 49-831 | LG 612 |
| A-04298 | 49-816 | LG 612 |
| A-04656 | 49-816 | LG 612 |
| A24779 | 55-610 | LG 191 |
| A55373-A | 33-208 | LG 866 |
| A65178 | 55-207 | LG 191 |
| A97910A | 55-816 | LG 988 |
| A98064-11 | 49-829 | LG 605 |
| A-98551-36 | 49-812 | LG 612 |
| A-98551-37 | 49-816 | LG 612 |
| A98773 | 43-532 | LG 936 |
| AO3006 | 55-255 | LG 1019 |
| D 63589 B | 55-211 | LG 191 |
| D 63589 C | 55-211 | LG 191 |
| D04359 | 40-142 | LG 584 |
| D04359A | 40-142 | LG 584 |
| D92702B | 55-610 | LG 191 |
| D98760 | 55-611 | LG 192 |
| D-98760 | 55-611 | LG 192 |
| D98760B | 55-611 | LG 192 |
| D-98760-B | 55-611 | LG 192 |
| DA 65178 A | 55-207 | LG 191 |
| DA 65178 B | 55-207 | LG 191 |
| DA 98912 | 55-741 | LG 1019 |
| DA 98912 A | 55-741 | LG 1019 |
| DA 98912 B | 55-741 | LG 1019 |
| DA 98912 C | 55-741 | LG 1019 |
| DA 98912 D | 55-741 | LG 1019 |
| DA 98912 E | 55-741 | LG 1019 |
| DA-03001-A | 55-053 | |
| DA04591A | 55-053 | |
| DA06486 | 07-024 | LG 771 |
| DA97910A | 55-816 | LG 988 |
| DA98866 | 55-821 | LG 988 |
| DA98866A | 55-821 | LG 988 |
| DA-98912 | 55-741 | LG 1019 |
| DA98912E | 55-741 | LG 1019 |
| DA-98912E | 55-741 | LG 1019 |
| DP153592 | 55-184 | LG 1019 |
| DP181767 | 07-022 | LG 764 |
| JA13064-1 | 33-024 | LG 945 |
| JA-518845 | 49-834 | LG 611 |
| JA-518846 | 49-810 | LG 612 |
| PS03117 | 55-811 | LG 933 |
| UP 00145 | 55-741 | LG 1019 |
| UP 00158 | 55-211 | LG 191 |
| UP 06807 | 55-211 | LG 191 |
| UP00106380 | 07-024 | LG 771 |
| UP00145 | 55-741 | LG 1019 |
| UP-00145 | 55-741 | LG 1019 |
| UP00158 | 55-211 | LG 191 |
| UP03209 | 55-816 | LG 988 |
| UP0387 | 07-200 | LG 778 |
| UP03871 | 07-200 | LG 778 |
| UP03916 | 49-170 | LG 758 |
| UP04091 | 55-811 | LG 933 |
| UP04117 | 55-255 | LG 1019 |
| UP04557 | 55-256 | LG 1019 |
| UP04802 | 49-027 | LG 769 |
| UP05460 | 55-811 | LG 933 |
| UP-05460 | 55-811 | LG 933 |
| UP06567 | 55-166 | |
| UP-06567 | 55-166 | |
| UP06763 | 55-821 | LG 988 |
| UP06764 | 55-816 | LG 988 |
| UP06765 | 40-142 | LG 584 |
| UP06807 | 55-211 | LG 191 |
| UP06862 | 07-004 | LG 769 |
| UP07287 | 07-008 | LG 762 |
| **HONDA** | | |
| 006111-ZH7-405 | 50-414 | LG 751 |
| 06111ZE1405 | 50-418 | LG 751 |
| 06111-ZE2-405 | 50-417 | LG 751 |
| 06111-ZE2-408 | 50-417 | LG 751 |
| 06111-ZE3-405 | 50-418 | LG 751 |
| 06111-ZE0-405 | 50-414 | LG 751 |
| 06111-ZF6-405 | 50-418 | LG 751 |
| 06111-ZF6-406 | 50-419 | LG 751 |
| 06111-ZF6-407 | 50-419 | LG 751 |
| 06111-ZH7-405 | 50-414 | LG 751 |
| 06111-ZH8-405 | 50-416 | LG 751 |
| 0611-zh8-405 | 50-416 | LG 751 |
| 06172-ZOA-305 | 30-704 | LG 194 |
| 061A1-U01 | 50-417 | LG 751 |
| 061A1-ZE0-000 | 50-414 | LG 751 |
| 061A1-ZE0-000 GX120 LG 751 | | 50-414 |
| 061A1-ZE0-010 | 50-414 | LG 751 |
| 061A1-ZE1-010 | 50-415 | LG 751 |
| 061A1-ZE1-T01 | 50-415 | LG 751 |
| 061A1-ZE1-T01 | 50-416 | LG 751 |
| 061A1-ZE2-I01 | 50-417 | LG 751 |
| 061A1-ZE2-U01 | 50-417 | LG 751 |
| 061A1-ZE3-T01 | 50-418 | LG 751 |
| 061A1-ZF6-000 | 50-419 | LG 751 |
| 061A1-ZF6-V00 | 50-419 | LG 751 |
| 06720-V10-030 | 73-048 | LG 846 |
| 06720-V-10-030 | 73-048 | LG 846 |
| 08170-ZE7-000 | 30-401 | LG 193 |
| 08170-ZG9-M00 | 30-709 | LG 194 |
| 08170-ZG9-M00 | 30-828 | LG 194 |
| 08170-ZG9-M01 | 30-709 | LG 194 |
| 08720-VE2-000 | 91-516 | LG 457 |
| 08720-VE2-000 | 91-517 | LG 457 |
| 1 601 0-883-01 5 | 49-815 | LG 626 |
| 1003375 | 73-006 | LG 846 |
| 1003391 | 73-006 | LG 846 |
| 1007483 | 30-400 | LG 193 |
| 100748-3 | 30-400 | LG 193 |
| 1021518 | 30-403 | LG 192 |
| 102518 | 30-403 | LG 192 |
| 1067149 | 30-933 | LG 195 |
| 11381-ZE2-000 | 50-452 | LG 753 |
| 11381-ZE2-306 | 50-452 | LG 753 |
| 11381-ZE2-309 | 50-452 | LG 753 |
| 11381-ZE2-800 | 50-452 | LG 753 |
| 11381-ZE2-801 | 50-452 | LG 753 |
| 11381-ZE3-001 | 50-455 | LG 753 |
| 11381-ZH8-800 | 50-450 | LG 753 |
| 11381-ZH8-801 | 50-450 | LG 753 |
| 12200-ZF6-406 | 36-531 | LG 755 |
| 12200-ZH9-405 | 36-535 | LG 755 |
| 12251-ZE1-800 | 50-556 | LG 753 |
| 12251-ZE2-000 | 50-553 | LG 752 |
| 12251-ZE2-800 | 50-553 | LG 752 |
| 12251ZE2801 | 50-553 | LG 752 |
| 12251-ZE3-000 | 50-554 | LG 753 |
| 12251-ZE3-000 | 50-555 | LG 753 |
| 12251-ZE3-800 | 50-554 | LG 753 |
| 12251-ZE3-W00 | 50-554 | LG 753 |
| 12251ZE3W01 | 50-554 | LG 753 |
| 12251-ZE6-000 | 50-428 | LG 752 |
| 12251-ZF1-000 | 50-556 | LG 753 |
| 12251-ZF1-800 | 50-556 | LG 753 |
| 12251-ZF6-W00 | 50-555 | LG 753 |
| 12251ZF6W01 | 50-555 | LG 753 |
| 12391-ZE1-000 | 50-432 | LG 753 |
| 12391-ZE2-000 | 50-431 | LG 753 |
| 12391-ZE2-010 | 50-431 | LG 753 |
| 12391-ZE2-020 | 50-431 | LG 753 |
| 12391-ZE7-M10 | 50-433 | LG 753 |
| 12391-ZE7-T00 | 50-433 | LG 753 |
| 1239300 | 30-963 | LG 195 |
| 13010-Z1T-003 | 36-043 | LG 754 |
| 13010-ZE1-013 | 36-042 | LG 754 |
| 13010-ZE2-013 | 36-044 | LG 754 |
| 13010-ZE2-014 | 36-044 | LG 754 |
| 13010-ZE2-921 | 36-044 | LG 754 |
| 13010-ZE3-003 | 36-045 | LG 754 |
| 13010-ZE6-013 | 36-041 | LG 754 |
| 13010-ZF1-023 | 36-043 | LG 754 |
| 13010-ZF6-003 | 36-046 | LG 754 |
| 13010-ZL0-003 | 36-043 | LG 754 |
| 130A1-ZE1-003 | 36-043 | LG 754 |
| 130A1-ZE6-003 | 36-041 | LG 754 |
| 13101-ZE1-000 | 36-243 | LG 754 |
| 13101-ZE2-010 | 36-244 | LG 754 |
| 13101-ZE2-W00 | 36-244 | LG 754 |
| 13101-ZE3-000 | 36-245 | LG 754 |
| 13101-ZE3-W00 | 36-245 | LG 754 |
| 13101-ZF6-W00 | 36-246 | LG 754 |
| 13101-ZF7-010 | 36-243 | LG 754 |
| 13200-Z0S-800 | 36-140 | LG 755 |
| 13200Z0T800 | 36-141 | LG 755 |
| 13200-Z0T-800 | 36-141 | LG 755 |
| 13200Z1C900 | 36-143 | LG 755 |
| 13200-Z1C-900 | 36-143 | LG 755 |
| 13200-Z1D-000 | 36-142 | LG 755 |
| 13200-ZE0-000 | 36-140 | LG 755 |
| 13200-ZE1-000 | 36-141 | LG 755 |
| 13200-ZE1-010 | 36-141 | LG 755 |
| 13200-ZE2-000 | 36-142 | LG 755 |
| 13200-ZE2-010 | 36-142 | LG 755 |
| 13200-ZE3-010 | 36-143 | LG 755 |
| 13200ZE3020 | 36-143 | LG 755 |
| 13200-ZE3-020 | 36-143 | LG 755 |
| 1384445 | 83-301 | LG 816 |
| 1445782 | 30-404 | LG 192 |
| 14711-Z0J-000 | 36-524 | LG 755 |
| 14711-Z0J-800 | 36-524 | LG 755 |
| 14711-ZE2-000 | 36-523 | LG 755 |
| 14711-ZE3-000 | 36-325 | LG 755 |
| 14711-ZF1-000 | 36-521 | LG 755 |
| 14711-ZL8-000 | 36-524 | LG 755 |
| 14721-ZE3-000 | 36-326 | LG 755 |
| 14721-ZF1-000 | 36-522 | LG 755 |
| 1488790 | 30-318 | LG 193 |
| 149590 | 30-400 | LG 193 |
| 1495902 | 30-400 | LG 193 |
| 149590-2 | 30-400 | LG 193 |
| 15400-679-023 | 83-301 | LG 816 |
| 15400-PFB-004 | 83-000 | LG 815 |
| 15400-PFB-014 | 83-000 | LG 815 |
| 15400-PJ7-015 | 83-000 | LG 815 |
| 15400-PLM-A01PE | 83-302 | LG 816 |
| 15400-PM3-004 | 83-000 | LG 815 |
| 15400-POH-305 | 83-301 | LG 816 |
| 15400-PR3-004 | 83-301 | LG 816 |
| 15400-ZJ1-004 | 83-302 | LG 816 |
| 15410-MJO-003 | 83-301 | LG 816 |
| 15410-MJO-004 | 83-301 | LG 816 |
| 15410-MJO-405 | 83-301 | LG 816 |
| 15410-ZJ4-999AH | 83-301 | LG 816 |
| 15510-ZE1-003 | 33-541 | LG 950 |
| 15510-ZE1-013 | 33-541 | LG 950 |
| 15510-ZE1-023 | 33-541 | LG 950 |
| 15510-ZE1-033 | 33-541 | LG 950 |
| 15510-ZE1-043 | 33-541 | LG 950 |
| 15510-ZE2-033 | 33-540 | LG 950 |
| 15510-ZE2-043 | 33-540 | LG 950 |
| 15510-ZE2-053 | 33-540 | LG 950 |
| 15600-735-003 | 50-453 | LG 756 |
| 15600-ZE1-000 | 49-196 | LG 756 |
| 15600-ZE1-003 | 49-196 | LG 756 |
| 15600-ZG4-003 | 50-454 | LG 756 |
| 16010-883-005 | 49-815 | LG 626 |
| 16010-883-015 | 49-986 | LG 627 |
| 16010-ZE0-015 | 49-312 | LG 605 |
| 16010-ZE0-025 | 49-312 | LG 605 |
| 16010-ZE1-811 | 49-325 | LG 605 |
| 16010-ZE1-812 | 49-325 | LG 605 |
| 16011-ZA0-931 | 49-997 | LG 628 |
| 16011-ZAO-931 | 49-997 | LG 628 |
| 16011-ZEO-005 | 49-996 | LG 629 |
| 16013-883-005 | 49-913 | LG 624 |
| 16013-Z0S-B01 | 49-911 | LG 624 |
| 16013-ZA0-005 | 49-911 | LG 624 |
| 16013ZA0-065 | 49-993 | LG 624 |
| 16013-ZA0-065 | 49-993 | LG 624 |
| 16013-ZA0-931 | 49-912 | LG 624 |
| 16013-ZA0-931 | 49-992 | LG 624 |
| 16013-ZAO-931 | 49-992 | LG 624 |
| 16013-ZE0-005 | 49-993 | LG 624 |
| 16013-ZEO-065 | 49-993 | LG 624 |
| 16015-892-505 | 49-985 | LG 625 |
| 16015-ZE0-811 | 49-994 | LG 625 |
| 16015-ZE0-831 | 49-995 | LG 625 |
| 16015-ZE0-831 | 49-999 | LG 626 |
| 16015-ZE1-811 | 49-995 | LG 625 |
| 16015-ZE1-831 | 49-995 | LG 625 |
| 16015-ZEO-811 | 49-994 | LG 625 |
| 16100-ZE2-W70 | 50-634 | LG 597 |
| 16100-ZE2-W71 | 50-634 | LG 597 |
| 16100-ZE3-V01 | 49-915 | LG 597 |
| 16100-ZE6-W00 | 50-635 | LG 596 |
| 16100-ZE6-W01 | 50-635 | LG 596 |
| 16100-ZE7-W20 | 50-636 | LG 596 |
| 16100-ZE7-W21 | 50-636 | LG 596 |
| 16100-ZF2-V00 | 50-637 | LG 597 |
| 16100-ZF2-V01 | 50-637 | LG 597 |
| 16100-ZF6-V00 | 50-637 | LG 597 |
| 16100-ZF6-V01 | 50-634 | LG 597 |
| 16100-ZF6-V01 | 50-637 | LG 597 |
| 16100-ZH7-W51 | 50-673 | LG 597 |
| 16100-ZH8-W50 | 50-638 | LG 596 |
| 16100-ZH8-W51 | 50-638 | LG 596 |
| 16100-ZH8-W61 | 50-638 | LG 596 |
| 16100-ZH8-W61 | 50-668 | LG 597 |
| 16100-ZH9-W20 | 50-669 | LG 597 |
| 16100-ZH9-W21 | 50-669 | LG 597 |
| 16100-ZK9-R61 | 50-674 | LG 597 |
| 16100-ZL0-W51 | 50-670 | LG 597 |
| 16100-ZLO-W51 | 50-670 | LG 597 |
| 16211-ZE1-000 | 49-233 | LG 601 |
| 16211-ZE2-000 | 49-234 | LG 601 |
| 16211-ZE2-010 | 49-236 | LG 601 |
| 16211-ZE2-W00 | 49-236 | LG 601 |
| 16212-ZE7-M10 | 49-181 | LG 752 |
| 16212-ZG9-J60 | 49-182 | LG 752 |
| 16212-ZH8-800 | 49-183 | LG 752 |
| 16212-ZL8-000 | 50-420 | LG 751 |
| 16220-ZA0-701 | 49-184 | LG 752 |
| 16220-ZA0-702 | 49-184 | LG 752 |
| 16220-ZAO-702 | 49-184 | LG 752 |
| 16220-ZE1-020 | 49-185 | LG 752 |
| 16220-ZE6-010 | 49-186 | LG 751 |
| 16221-883-800 | 50-421 | LG 751 |
| 16221-Z0H-000 | 49-324 | LG 752 |
| 16221-ZA0-800 | 49-187 | LG 752 |
| 16221-ZF6-800 | 49-189 | LG 752 |
| 16221-ZH8-801 | 49-190 | LG 752 |
| 16223-ZA0-700 | 49-191 | LG 752 |
| 16223-ZA0-800 | 49-191 | LG 752 |
| 16223-ZAO-800 | 49-191 | LG 752 |
| 16223-ZE3-W00 | 49-192 | LG 752 |
| 16223-ZE3-WOO | 49-192 | LG 752 |
| 16228-ZL8-000 | 50-422 | LG 751 |
| 1622-ZAO-800 | 49-187 | LG 752 |
| 16576-891-000 | 46-304 | LG 723 |
| 166028 | 46-306 | LG 708 |
| 16610-ZE1-000 | 49-914 | LG 165 |

X

* OREGON® Gator™ replacement blade

# 2019 OEM X-Reference

## HONDA

| OEM No. | OREGON | Page |
|---|---|---|
| 1688217 | 45-295 | LG 232 |
| 16950-ZG9-M02 | 07-409 | LG 766 |
| 16955-ZE1-000 | 07-129 | LG 774 |
| 16955-ZE1-000 | 07-393 | LG 765 |
| 16956-ZE1-000 | 07-129 | LG 774 |
| 17010-ZJ1-000 | 30-437 | LG 192 |
| 17011-ZJ1-000 | 30-437 | LG 192 |
| 17200-ZE7-003 | 30-401 | LG 193 |
| 17200-ZE7-013 | 30-401 | LG 193 |
| 17210-759-013 | 30-703 | LG 192 |
| 17210-890-505 | 30-403 | LG 192 |
| 17210-Z1V-003 | 30-187 | LG 192 |
| 17210-Z1V-003 | 30-401 | LG 193 |
| 17210-ZA0-506 | 30-317 | LG 194 |
| 17210-ZE0-505 | 30-318 | LG 193 |
| 17210-ZE0-505 | 30-816 | LG 193 |
| 17210-ZE0-822 | 30-318 | LG 193 |
| 17210-ZE0-822 | 30-816 | LG 193 |
| 17210-ZE1-505 | 30-404 | LG 192 |
| 17210-ZE1-505 | 30-802 | LG 192 |
| 17210-ZE1-505 | 69-023 | LG 192 |
| 17210-ZE1-507 | 30-404 | LG 192 |
| 17210-ZE1-517 | 30-404 | LG 192 |
| 17210-ZE1-517 | 30-802 | LG 192 |
| 17210-ZE1-517 | 69-023 | LG 192 |
| 17210-ZE1-820 | 30-404 | LG 192 |
| 17210-ZE1-820 | 30-802 | LG 192 |
| 17210-ZE1-820 | 69-023 | LG 192 |
| 17210-ZE1-821 | 30-404 | LG 192 |
| 17210-ZE1-821 | 30-802 | LG 192 |
| 17210-ZE1-822 | 30-404 | LG 192 |
| 17210-ZE1-822 | 30-802 | LG 192 |
| 17210-ZE1-822 | 69-023 | LG 192 |
| 17210-ZE2-505 | 30-406 | LG 193 |
| 17210-ZE2-505 | 30-805 | LG 193 |
| 17210-ZE2-505 | 69-030 | LG 193 |
| 17210-ZE2-515 | 30-406 | LG 193 |
| 17210-ZE2-515 | 30-805 | LG 193 |
| 17210-ZE2-821 | 30-406 | LG 193 |
| 17210-ZE2-821 | 30-805 | LG 193 |
| 17210-ZE2-822 | 30-406 | LG 193 |
| 17210-ZE2-822 | 30-805 | LG 193 |
| 17210-ZE2-882 | 30-406 | LG 193 |
| 17210-ZE3-000 | 30-417 | LG 193 |
| 17210-ZE3-000 | 30-806 | LG 193 |
| 17210-ZE3-000 | 69-007 | LG 193 |
| 17210-ZE3-003 | 30-403 | LG 192 |
| 17210-ZE3-010 | 30-417 | LG 193 |
| 17210-ZE3-010 | 30-806 | LG 193 |
| 17210-ZE3-010 | 69-007 | LG 193 |
| 17210-ZE3-505 | 30-417 | LG 193 |
| 17210-ZE3-505 | 30-806 | LG 193 |
| 17210-ZE3-505 | 69-007 | LG 193 |
| 17210-ZE6-003 | 30-400 | LG 193 |
| 17210-ZE6-003 | 30-808 | LG 193 |
| 17210-ZE6-505 | 30-400 | LG 193 |
| 17210-ZE6-505 | 30-808 | LG 193 |
| 17210-ZE7-003 | 30-187 | LG 192 |
| 17210-ZE7-003 | 30-401 | LG 193 |
| 17210-ZE7-013 | 30-187 | LG 192 |
| 17210-ZE7-013 | 30-401 | LG 193 |
| 17210-ZE7-505 | 30-187 | LG 192 |
| 17210-ZE7-505 | 30-401 | LG 193 |
| 17210-ZE8-003 | 30-405 | LG 193 |
| 17210-ZE8-013 | 30-405 | LG 193 |
| 17210-ZE8-820 | 30-318 | LG 193 |
| 17210-ZE8-820 | 30-816 | LG 193 |
| 17210-ZE0-822 | 30-318 | LG 193 |
| 17210-ZF5-010 | 30-405 | LG 193 |
| 17210-ZF5-505 | 30-405 | LG 193 |
| 17210-ZJ1-841 | 30-436 | LG 194 |
| 17210-ZJ1-842 | 30-436 | LG 194 |
| 17211-888-013 | 30-400 | LG 193 |
| 17211-888-013 | 30-808 | LG 193 |
| 17211-890-003 | 30-403 | LG 192 |
| 17211-890-013 | 30-403 | LG 192 |
| 17211-890-023 | 30-403 | LG 192 |
| 17211-899-000 | 30-963 | LG 195 |
| 17211-Z37-W03 | 30-015 | LG 194 |
| 17211-ZA0-702 | 30-317 | LG 194 |
| 17211-ZAO-702 | 30-317 | LG 194 |
| 17211-ZB2-000 | 30-345 | LG 195 |
| 17211-ZE1-000 | 30-346 | LG 195 |
| 17211-ZE1-003 | 30-704 | LG 194 |
| 17211-ZE7-W01 | 30-015 | LG 194 |
| 17211-ZE7-W01 | 30-401 | LG 193 |
| 17211-ZE7-W01 | 30-843 | LG 194 |
| 17211-ZE7-W02 | 30-015 | LG 194 |
| 17211-ZE7-W02 | 30-401 | LG 193 |
| 17211-ZE7-W02 | 30-843 | LG 194 |
| 17211-ZE7-W03 | 30-015 | LG 194 |
| 17211-ZE7-W03 | 30-401 | LG 193 |
| 17211-ZE7-W03 | 30-843 | LG 194 |
| 17211-ZE7-WO3 | 30-015 | LG 194 |
| 17211-ZE8-000 | 30-347 | LG 194 |
| 17211-ZE8-000 | 30-832 | LG 194 |
| 17211-ZF5-V01 | 30-064 | LG 194 |
| 17211-ZF5-W01 | 30-064 | LG 194 |
| 17211-ZG9-800 | 30-027 | LG 194 |
| 17211-ZG9-M00 | 30-709 | LG 194 |
| 17211-ZG9-M00 | 30-828 | LG 194 |
| 17211-ZG9-MOO | 30-709 | LG 194 |
| 17211-ZL8-000 | 30-347 | LG 194 |
| 17211-ZL8-000 | 30-710 | LG 181 |
| 17211-ZL8-000 | 69-347 | LG 194 |
| 17211-ZL8-003 | 30-347 | LG 194 |
| 17211-ZL8-003 | 30-710 | LG 181 |
| 17211-ZL8-003 | 30-832 | LG 194 |
| 17211-ZL8-003 | 69-347 | LG 194 |
| 17211-ZL8-023 | 30-347 | LG 194 |
| 17211-ZL8-023 | 30-832 | LG 194 |
| 17211-ZL8-023 | 69-347 | LG 194 |
| 17211-ZOA-013 | 30-704 | LG 194 |
| 17211-ZOA-13 | 30-704 | LG 194 |
| 17217-ZJ1-840 | 30-436 | LG 194 |
| 17218-888-003 | 30-933 | LG 195 |
| 17218-Z0A-810 | 30-451 | LG 196 |
| 17218-ZE0-505 | 30-453 | LG 195 |
| 17218-ZE0-821 | 30-453 | LG 195 |
| 17218-ZE1-505 | 30-506 | LG 195 |
| 17218-ZE1-507 | 30-506 | LG 195 |
| 17218-ZE1-821 | 30-506 | LG 195 |
| 17218-ZE2-505 | 30-934 | LG 195 |
| 17218-ZE2-821 | 30-934 | LG 195 |
| 17218-ZE3-000 | 30-454 | LG 195 |
| 17218-ZE3-505 | 30-417 | LG 193 |
| 17218-ZE3-505 | 30-454 | LG 195 |
| 17218-ZE3-505 | 30-806 | LG 193 |
| 17218-ZE6-505 | 30-933 | LG 195 |
| 17218-ZEO-821 | 30-506 | LG 195 |
| 17218-ZF5-505 | 30-405 | LG 193 |
| 17218-ZG9-800 | 30-027 | LG 194 |
| 17218-ZG9-800 | 30-452 | LG 195 |
| 17218-ZG9-M00 | 30-709 | LG 194 |
| 17218-ZG9-M00 | 30-828 | LG 194 |
| 17218-ZG9-M00 | 30-932 | LG 196 |
| 17218-ZG9-M00 | 30-933 | LG 195 |
| 17218-ZG9-MOO | 30-932 | LG 196 |
| 17218-ZG9-MOO | 30-933 | LG 195 |
| 17218-ZJ1-000 | 30-437 | LG 192 |
| 17218-ZJ1-840 | 30-455 | LG 196 |
| 17218-ZOA-000 | 30-704 | LG 194 |
| 17218-ZOA-810 | 30-704 | LG 194 |
| 17220-ZM0-000 | 30-438 | LG 196 |
| 17230-ZE1-820 | 30-332 | LG 196 |
| 17230-ZE3-W01 | 30-334 | LG 196 |
| 17231-ZE3-W01 | 30-334 | LG 196 |
| 17231-ZM0-000 | 30-438 | LG 196 |
| 172-ZE3-010 | 30-417 | LG 193 |
| 175064 | 95-057 | LG 380 |
| 17510-ZE1-020ZA | 07-600 | LG 770 |
| 17510-ZE1-030ZA | 07-600 | LG 770 |
| 17510-ZE2-010ZA | 07-601 | LG 770 |
| 17510-ZE2-020ZA | 07-601 | LG 770 |
| 17510-ZE2-10ZA | 07-601 | LG 770 |
| 17510-ZE2-20ZA | 07-601 | LG 770 |
| 17510-ZE3-010ZA | 07-602 | LG 770 |
| 17510-ZE3-020ZA | 07-602 | LG 770 |
| 17510-ZE3-20ZA | 07-602 | LG 770 |
| 176200-ZH7-013 | 55-125 | LG 771 |
| 17620-ZE2-W00 | 55-126 | LG 771 |
| 17620-ZE7-000 | 07-318 | LG 771 |
| 17620-ZH7-023 | 07-319 | LG 771 |
| 17620-ZH7-023 | 55-125 | LG 771 |
| 17620-ZL8-003 | 07-025 | LG 771 |
| 1762-ZE2-W01 | 07-118 | LG 777 |
| 17672-880-000 | 07-118 | LG 777 |
| 17672-ZE2-W01 | 07-118 | LG 777 |
| 17910-VA3-003 | 46-306 | LG 708 |
| 17910-VA3-S01 | 46-306 | LG 708 |
| 18310-ZE2-W00 | 35-034 | LG 807 |
| 18310-ZE2-W00 | 35-043 | LG 808 |
| 18310ZE2W01 | 35-034 | LG 807 |
| 18310-ZE2-W61 | 35-036 | LG 807 |
| 18310-ZE2-W61 | 35-044 | LG 808 |
| 18310-ZF1-000 | 35-038 | LG 808 |
| 18310-ZLO-000 | 35-041 | LG 808 |
| 18310-ZM0-000 | 35-037 | LG 808 |
| 18320-ZE2-W01 | 35-034 | LG 807 |
| 18320-ZE2-W61 | 35-036 | LG 807 |
| 18320-ZE2-W61 | 35-043 | LG 808 |
| 18320-ZE3-W01 | 35-044 | LG 808 |
| 18320-ZF1-H01 | 35-041 | LG 808 |
| 18320-ZF1-HO1 | 35-041 | LG 808 |
| 18330-ZH9-N00 | 35-045 | LG 808 |
| 18333-ZK6-Y00 | 50-426 | LG 753 |
| 18333-ZK6-YOO | 50-426 | LG 753 |
| 18381-ZE2-800 | 50-423 | LG 753 |
| 18381-ZE2-W10 | 50-423 | LG 753 |
| 18381-ZH6-800 | 50-425 | LG 753 |
| 18381-ZH8-800 | 50-425 | LG 753 |
| 18381ZH8801 | 49-183 | LG 752 |
| 18381ZH8801 | 50-425 | LG 753 |
| 18381-ZH8-801 | 50-425 | LG 753 |
| 18381-ZL8-305 | 49-143 | LG 752 |
| 2090207 | 30-405 | LG 193 |
| 2107993 | 30-417 | LG 193 |
| 2107993 | 30-806 | LG 193 |
| 2289734 | 30-401 | LG 193 |
| 23510-VB5-801 | 51-223 | LG 726 |
| 23510-VB5-803 | 51-223 | LG 726 |
| 23520-VB5-801 | 51-224 | LG 726 |
| 23520-VB5-803 | 51-224 | LG 726 |
| 2450740 | 33-735 | LG 917 |
| 2535029 | 30-506 | LG 195 |
| 2538429 | 30-934 | LG 195 |
| 25641-ZE4-003 | 83-010 | LG 819 |
| 25641-ZE4-003 | 83-400 | LG 819 |
| 274162 | 30-401 | LG 193 |
| 2741627 | 30-187 | LG 192 |
| 2741627 | 30-401 | LG 193 |
| 2801595 | 91-291 | LG 457 |
| 28400-883-040ZB | 31-020 | LG 923 |
| 28400-KL8-013ZA | 31-066 | LG 923 |
| 28400-Z0D-V02ZC | 31-920 | LG 922 |
| 28400-Z0D-V03ZC | 31-920 | LG 922 |
| 28400-Z0D-V04ZC | 31-920 | LG 922 |
| 28400-Z0L-V20ZB | 31-066 | LG 923 |
| 28400-ZE1-003ZA | 31-020 | LG 923 |
| 28400-ZE1-003ZF | 31-020 | LG 923 |
| 28400-ZE2-W01ZA | 31-049 | LG 923 |
| 28400-ZE2-W01ZB | 31-049 | LG 923 |
| 28400-ZE2-W01ZN | 31-049 | LG 923 |
| 28400-ZE3-W01ZA | 31-060 | LG 922 |
| 28400-ZE3-W01ZP | 31-060 | LG 922 |
| 28400-ZE3-W02ZP | 31-060 | LG 922 |
| 28400-ZE7-M02 | 31-070 | LG 922 |
| 28400-ZG9-802 | 31-070 | LG 922 |
| 28400-ZG9-803 | 31-070 | LG 922 |
| 28400-ZH8-013ZA | 31-052 | LG 923 |
| 28400-ZH8-023YA | 31-052 | LG 923 |
| 28400-ZL8-013ZA | 31-066 | LG 923 |
| 28400-ZMO-013ZA | 31-066 | LG 923 |
| 28400-ZZL8-023ZA | 31-066 | LG 923 |
| 28410-ZH8-003YA | 31-075 | LG 923 |
| 28410-ZH8-023YA | 31-075 | LG 923 |
| 28410-ZH8-023ZB | 31-075 | LG 923 |
| 28410-ZH8-023ZG | 31-075 | LG 923 |
| 28415-ZG9-802 | 31-081 | LG 936 |
| 28418-ZG9-802 | 31-081 | LG 936 |
| 28420-ZE2-W01 | 31-034 | LG 933 |
| 28420-ZH8-003 | 31-023 | LG 933 |
| 28421-ZE3-W01 | 31-034 | LG 933 |
| 28422-ZE2-W01 | 31-083 | LG 930 |
| 28422-ZH8-013 | 31-025 | LG 930 |
| 28422-ZH8-013 | 31-058 | LG 931 |
| 28433-ZH-003 | 31-027 | LG 931 |
| 28433-ZH8-003 | 31-027 | LG 931 |
| 28433-ZH8-003 | 31-058 | LG 931 |
| 28441-ZH8-003 | 31-058 | LG 931 |
| 28442-ZE2-W01 | 31-083 | LG 930 |
| 28442-ZE2-W01 | 43-426 | LG 936 |
| 28442-ZH8-003 | 43-425 | LG 936 |
| 28443-ZE2-W01 | 31-087 | LG 930 |
| 28443-ZH8-003 | 31-058 | LG 931 |
| 28451-ZE3-A02 | 31-037 | LG 928 |
| 28451-ZH7-801 | 31-013 | LG 928 |
| 28451-ZH8-003 | 31-026 | LG 928 |
| 28461-ZE1-003 | 31-910 | LG 929 |
| 28461-ZE1-013 | 31-910 | LG 929 |
| 28461-ZG0-004 | 31-911 | LG 929 |
| 28461-ZGO-004 | 31-911 | LG 929 |
| 28461-ZH8-003 | 31-912 | LG 929 |
| 28461ZH8013 | 31-912 | LG 929 |
| 28486-ZE6-T02 | 31-090 | LG 930 |
| 289387 | 30-318 | LG 193 |
| 2893873 | 30-318 | LG 193 |
| 289388 | 30-404 | LG 192 |
| 2893881 | 30-404 | LG 192 |
| 289389 | 30-406 | LG 193 |
| 2893899 | 30-406 | LG 193 |
| 289390 | 30-417 | LG 193 |
| 2893907 | 30-417 | LG 193 |
| 289392 | 30-317 | LG 194 |
| 2893923 | 30-317 | LG 194 |
| 289393 | 30-403 | LG 192 |
| 2893931 | 30-403 | LG 192 |
| 291072 | 30-405 | LG 193 |
| 2910727 | 30-405 | LG 193 |
| 30500-ZE1-023 | 33-348 | LG 785 |
| 30500-ZE1-033 | 33-348 | LG 785 |
| 30500-ZE1-043 | 33-348 | LG 785 |
| 30500-ZE1-053 | 33-348 | LG 785 |
| 30500-ZE1-063 | 33-348 | LG 785 |
| 30500-ZE1-073 | 33-348 | LG 785 |
| 30500-ZE2-023 | 33-521 | LG 785 |
| 30500-ZE7-033 | 33-520 | LG 785 |
| 30500-ZE7-043 | 33-520 | LG 785 |
| 30500-ZE7-063 | 33-520 | LG 785 |
| 30500-ZF6-W02 | 33-521 | LG 785 |
| 30500-ZG9-801 | 33-520 | LG 785 |
| 30500-ZG9-M02 | 33-522 | LG 785 |
| 30500-ZL8-004 | 33-151 | LG 785 |
| 30500-ZL8-014 | 33-151 | LG 785 |
| 30700-ZE1-000 | 33-215 | LG 866 |
| 30700-ZE1-013 | 33-215 | LG 866 |
| 30700-ZJ1-003 | 33-216 | LG 866 |
| 30700-ZJ1-841 | 33-216 | LG 866 |
| 31200-ZJ1-841 | 33-734 | LG 917 |

X



* OREGON® Gator™ replacement blade

| OEM No. | OREGON | Page |
|---|---|---|
| **HONDA** | | |
| 31200-ZJ4-831 | 33-733 | LG 917 |
| 31200-ZJ4-832 | 33-733 | LG 917 |
| 31201-890-003 | 49-193 | LG 756 |
| 31201-ZE3-004 | 49-207 | LG 756 |
| 31210-ZE1-013 | 33-735 | LG 917 |
| 31210-ZE1-023 | 33-741 | LG 917 |
| 31210-ZE3-013 | 33-735 | LG 917 |
| 31210ZE3023 | 33-735 | LG 917 |
| 31210-ZE3-023 | 33-735 | LG 917 |
| 31210-ZE6-651 | 33-741 | LG 917 |
| 32100-ZJ1-842 | 33-734 | LG 917 |
| 32100-ZJ1-H01 | 33-734 | LG 917 |
| 34150-ZH7-003 | 33-542 | LG 950 |
| 34150-ZH7-013 | 33-542 | LG 950 |
| 35100-772-003 | 33-386 | LG 942 |
| 3510-772-003 | 33-386 | LG 942 |
| 36100-883-005 | 33-013 | LG 949 |
| 36100-ZE1-015 | 33-013 | LG 949 |
| 3678877 | 31-083 | LG 930 |
| 3678901 | 31-087 | LG 930 |
| 3682036 | 35-045 | LG 808 |
| 3683703 | 35-038 | LG 808 |
| 3979929 | 31-090 | LG 930 |
| 4010062 | 30-709 | LG 194 |
| 4010070 | 30-709 | LG 194 |
| 4010070 | 30-932 | LG 196 |
| 42661-VE2-800 | 51-225 | LG 725 |
| 42700-VK6-020ZA | 72-169 | LG 1033 |
| 42710-VE2-M01ZE | 72-170 | LG 1033 |
| 432391 | 30-027 | LG 194 |
| 4327383 | 30-027 | LG 194 |
| 44710-VG3-000 | 72-052 | LG 1033 |
| 44710-VL0-L01ZB | 72-172 | LG 1033 |
| 4527453 | 30-401 | LG 193 |
| 4527479 | 30-709 | LG 194 |
| 4581476 | 33-522 | LG 785 |
| 4589693 | 33-348 | LG 785 |
| 4640843 | 35-044 | LG 808 |
| 4644811 | 35-041 | LG 808 |
| 4684098 | 35-043 | LG 808 |
| 4956579 | 30-437 | LG 192 |
| 5038781 | 83-301 | LG 816 |
| 5152491 | 50-638 | LG 596 |
| 5168273 | 30-317 | LG 194 |
| 517693 | 50-636 | LG 596 |
| 5185855 | 30-400 | LG 193 |
| 5189725 | 50-635 | LG 596 |
| 5196308 | 30-934 | LG 195 |
| 5213293 | 30-933 | LG 195 |
| 5222120 | 49-915 | LG 597 |
| 5222211 | 50-634 | LG 597 |
| 5222211 | 50-637 | LG 597 |
| 5247408 | 30-404 | LG 192 |
| 5248299 | 30-405 | LG 193 |
| 5252697 | 30-417 | LG 193 |
| 5252697 | 30-806 | LG 193 |
| 5266721 | 30-406 | LG 193 |
| 5272802 | 30-506 | LG 195 |
| 5273032 | 30-318 | LG 193 |
| 5281449 | 30-417 | LG 193 |
| 5281449 | 30-806 | LG 193 |
| 5310289 | 30-401 | LG 193 |
| 5311089 | 30-403 | LG 192 |
| 53125-VA4-K10 | 81-015 | LG 802 |
| 5357389 | 30-015 | LG 194 |
| 5357389 | 30-401 | LG 193 |
| 5357399 | 30-015 | LG 194 |
| 5357399 | 30-843 | LG 194 |
| 54510-VB5-800 | 46-302 | LG 709 |
| 54510-VG4-C01 | 46-336 | LG 709 |
| 54630-VK6-010 | 46-333 | LG 709 |
| 5580402 | 30-347 | LG 194 |
| 5580444 | 30-438 | LG 196 |
| 5753595 | 30-064 | LG 194 |
| 6145353 | 35-036 | LG 807 |
| 6224653 | 30-436 | LG 194 |
| 6224661 | 30-436 | LG 194 |
| 63125-VA4-K10 | 81-015 | LG 802 |
| 665265 | 30-704 | LG 194 |
| 6672448 | 73-048 | LG 846 |
| 6672448 | 73-049 | LG 847 |
| 6718159 | 30-347 | LG 194 |
| 6813166 | 73-048 | LG 846 |
| 7032428 | 33-521 | LG 785 |
| 7120397 | 30-436 | LG 194 |
| 7199227 | 33-520 | LG 785 |
| 72511-960-000 | 90-651* | LG 457 |
| 72511-960-000 | 91-291 | LG 457 |
| 72511-960-004 | 90-651* | LG 457 |
| 72511-960-004 | 91-291 | LG 457 |
| 72511-960-020 | 90-651* | LG 457 |
| 72511-960-020 | 91-444 | LG 457 |
| 72511-VA2-690 | 90-651* | LG 457 |
| 72511-VA2-690 | 91-291 | LG 457 |
| 72511-VA4-000 | 90-651* | LG 457 |
| 72511-VA4-000 | 91-291 | LG 457 |
| 72511-VE2-000 | 91-516 | LG 457 |
| 72511-VG4-K00 | 91-516 | LG 457 |
| 72511-VK6-000 | 92-101 | LG 458 |
| 72521-730-003 | 73-006 | LG 846 |
| 72531-VE2-000 | 91-517 | LG 457 |
| 72531-VE2-010 | 91-517 | LG 457 |
| 72531-VE2-020 | 91-517 | LG 457 |
| 72531-VK6-000 | 92-102 | LG 458 |
| 72531-VK6-010 | 92-102 | LG 458 |
| 72552-730-003 | 73-006 | LG 846 |
| 7399280 | 30-704 | LG 194 |
| 7399306 | 30-704 | LG 194 |
| 75211-960-020 | 91-444 | LG 457 |
| 76153-736-010 | 73-825 | LG 850 |
| 76322-747-A10 | 73-824 | LG 847 |
| 76322-V10-010 | 73-049 | LG 847 |
| 7698475 | 83-302 | LG 816 |
| 785600 | 30-436 | LG 194 |
| 7869555 | 92-102 | LG 458 |
| 787226 | 30-437 | LG 192 |
| 81310-758-S00 | 86-036 | LG 781 |
| 876904 | 45-004 | LG 235 |
| 90003-ZH8-003 | 31-028 | LG 928 |
| 90004-ZE2-W01 | 31-032 | LG 928 |
| 90102-732-010 | 80-017 | LG 852 |
| 91102-VA4-003 | 45-295 | LG 232 |
| 91102VA4013 | 45-259 | LG 224 |
| 91131-ZH8-801 | 50-450 | LG 753 |
| 91201-889-003 | 49-206 | LG 755 |
| 91201-890-003 | 49-193 | LG 756 |
| 91201-Z0T-801 | 49-208 | LG 756 |
| 91201-ZE3-004 | 49-207 | LG 756 |
| 91201-ZG9-U71 | 49-194 | LG 755 |
| 91202-883-005 | 49-208 | LG 756 |
| 91252-888-003 | 49-194 | LG 755 |
| 95001-45140-40 | 07-060 | LG 762 |
| 95001-45200-40S | 07-060 | LG 762 |
| 95001-45222-40 | 07-061 | LG 762 |
| 95001-45300-40S | 07-061 | LG 762 |
| 96150-60020-10 | 45-004 | LG 235 |
| 961506204010 | 45-259 | LG 224 |
| Code 0876904 | 45-004 | LG 235 |
| CODE 1007483 | 30-400 | LG 193 |
| CODE 1021518 | 30-403 | LG 192 |
| CODE 1067149 | 30-933 | LG 195 |
| CODE 1239300 | 30-963 | LG 195 |
| CODE 1445782 | 30-404 | LG 192 |
| CODE 1488790 | 30-318 | LG 193 |
| CODE 1495902 | 30-400 | LG 193 |
| CODE 2090207 | 30-405 | LG 193 |
| CODE 2107993 | 30-417 | LG 193 |
| CODE 2107993 | 30-806 | LG 193 |
| CODE 2289734 | 30-401 | LG 193 |
| CODE 2538429 | 30-934 | LG 195 |
| CODE 2741627 | 30-187 | LG 192 |
| CODE 2741627 | 30-401 | LG 193 |
| CODE 2893873 | 30-318 | LG 193 |
| CODE 2893881 | 30-404 | LG 192 |
| CODE 2893899 | 30-406 | LG 193 |
| CODE 2893907 | 30-417 | LG 193 |
| CODE 2893923 | 30-317 | LG 194 |
| CODE 2893931 | 30-403 | LG 192 |
| CODE 2910727 | 30-405 | LG 193 |
| CODE 4010062 | 30-709 | LG 194 |
| CODE 4010070 | 30-709 | LG 194 |
| CODE 4010070 | 30-933 | LG 195 |
| CODE 432391 | 30-027 | LG 194 |
| CODE 4327383 | 30-027 | LG 194 |
| CODE 4527479 | 30-709 | LG 194 |
| CODE 4956579 | 30-437 | LG 192 |
| CODE 5168273 | 30-317 | LG 194 |
| CODE 5185855 | 30-400 | LG 193 |
| CODE 5196308 | 30-934 | LG 195 |
| CODE 5213293 | 30-933 | LG 195 |
| CODE 5247408 | 30-404 | LG 192 |
| CODE 5248299 | 30-405 | LG 193 |
| CODE 5252697 | 30-417 | LG 193 |
| CODE 5252697 | 30-806 | LG 193 |
| CODE 5266721 | 30-406 | LG 193 |
| CODE 5272802 | 30-506 | LG 195 |
| CODE 5273032 | 30-318 | LG 193 |
| CODE 5281449 | 30-417 | LG 193 |
| CODE 5281449 | 30-806 | LG 193 |
| CODE 5310289 | 30-401 | LG 193 |
| CODE 5311089 | 30-403 | LG 192 |
| CODE 5357389 | 30-015 | LG 194 |
| CODE 5357389 | 30-401 | LG 193 |
| CODE 5357399 | 30-015 | LG 194 |
| CODE 5580402 | 30-347 | LG 194 |
| CODE 5580444 | 30-438 | LG 196 |
| CODE 5753595 | 30-064 | LG 194 |
| CODE 6224653 | 30-436 | LG 194 |
| CODE 6224661 | 30-436 | LG 194 |
| CODE 665265 | 30-704 | LG 194 |
| CODE 6718159 | 30-347 | LG 194 |
| CODE 7120397 | 30-436 | LG 194 |
| CODE 7399280 | 30-704 | LG 194 |
| CODE 7399306 | 30-704 | LG 194 |
| E-3019 | 30-318 | LG 193 |
| E-4513 | 30-406 | LG 193 |
| M2100-576-91938 | 90-651* | LG 457 |
| M2100-576-91938 | 91-291 | LG 457 |
| VE2-020 | 91-517 | LG 457 |
| **HOWARD PRICE** | | |
| 02-425 | 33-028 | LG 947 |
| 09-058 | 33-015 | LG 948 |
| 6033 | 83-300 | LG 819 |
| **HOWDEN HARDWARE** | | |
| 754-0145 | 75-145 | LG 300 |
| 754-0151 | 75-004 | LG 301 |
| 754-0935 | 75-092 | LG 304 |
| 954-0145 | 75-145 | LG 300 |
| 954-0145A | 75-145 | LG 300 |
| 954-0151 | 75-004 | LG 301 |
| 954-015A | 75-145 | LG 300 |
| 954-0935 | 75-092 | LG 304 |
| **HUFFMAN** | | |
| 10890 | 34-002 | LG 821 |
| 24392 | 34-008 | LG 821 |
| **HUFFY** | | |
| 9992 | 34-031 | LG 821 |
| **HUSKEE** | | |
| 11285 | 91-005 | LG 458 |
| 11285 | 96-041* | LG 372 |
| 11370 | 91-005 | LG 458 |
| 11370 | 96-041* | LG 372 |
| 1137059 | 91-005 | LG 458 |
| 1137059 | 96-041* | LG 372 |
| **HUSQVARNA** | | |
| 100026 | 75-269 | LG 252 |
| 100140M | 95-014 | LG 374 |
| 100140M | 95-607* | LG 397 |
| 100340 | 396-716* | LG 451 |
| 100340 | 596-310* | LG 447 |
| 100340 | 96-310* | LG 444 |
| 100340 | 99-127 | LG 375 |
| 100341 | 396-726* | LG 391 |
| 100341 | 596-344* | LG 495 |
| 100341 | 91-256 | LG 437 |
| 100341 | 96-344* | LG 536 |
| 100669K | 95-015 | LG 400 |
| 101366 | 396-716* | LG 451 |
| 101366 | 596-310* | LG 447 |
| 101366 | 96-310* | LG 444 |
| 101366 | 99-127 | LG 375 |
| 101485 | 396-726* | LG 391 |
| 101485 | 596-344* | LG 495 |
| 101485 | 91-256 | LG 437 |
| 101485 | 96-344* | LG 536 |
| 102603 | 33-115 | LG 738 |
| 103274 | 95-058 | LG 458 |
| 104360X | 34-046 | LG 824 |
| 105313X | 78-043 | LG 824 |
| 106634 | 95-015 | LG 400 |
| 106634X | 95-015 | LG 400 |
| 106635X | 95-014 | LG 374 |
| 106635X | 95-607* | LG 397 |
| 106734 | 05-020 | LG 913 |
| 110411 | 15-472 | LG 259 |
| 110832 | 15-473 | LG 288 |
| 112053 | 195-072 | LG 530 |
| 112053 | 595-605* | LG 422 |
| 112053 | 95-605* | LG 463 |
| 112529 | 15-474 | LG 288 |
| 114886 | 95-023 | LG 380 |
| 114886 | 95-073 | LG 533 |
| 120262X | 95-034 | LG 377 |
| 120626X | 95-034 | LG 377 |
| 121263X | 95-031 | LG 377 |
| 121658X | 82-680 | LG 870 |
| 121705X | 82-495 | LG 870 |
| 121798X | 95-027 | LG 398 |
| 122265X | 95-014 | LG 374 |
| 122265X | 95-607* | LG 397 |
| 123431X | 95-031 | LG 377 |
| 123713X | 05-020 | LG 913 |
| 126338X | 95-034 | LG 377 |
| 127783 | 34-049 | LG 824 |
| 12784 | 195-033 | LG 400 |
| 12784 | 595-601* | LG 400 |
| 12784 | 95-601* | LG 423 |
| 127841 | 595-613* | LG 463 |
| 127841 | 95-036 | LG 463 |
| 127841 | 95-613* | LG 463 |
| 127842 | 195-033 | LG 400 |
| 127842 | 595-601* | LG 400 |
| 127842 | 95-601* | LG 423 |
| 127843 | 195-032 | LG 425 |
| 127843 | 596-900* | LG 380 |
| 127843 | 96-900* | LG 526 |
| 129206 | 44-371 | LG 834 |
| 129861 | 44-370 | LG 834 |
| 130652 | 595-614* | LG 459 |
| 130652 | 95-006 | LG 397 |
| 130652 | 95-045 | LG 374 |
| 130652 | 95-614* | LG 375 |
| 130861 | 46-325 | LG 701 |

X

# 2019 OEM X-Reference

## HUSQVARNA

| OEM No. | OREGON | Page |
|---|---|---|
| 131264 | 75-097 | LG 289 |
| 131322 | 195-033 | LG 400 |
| 131322 | 595-601* | LG 400 |
| 131322 | 95-601* | LG 423 |
| 131494 | 34-046 | LG 824 |
| 133107 | 60-105 | LG 702 |
| 133346 | 595-024* | LG 465 |
| 133346 | 95-051 | LG 465 |
| 133348 | 195-021 | LG 468 |
| 133348 | 595-602* | LG 403 |
| 133348 | 95-602* | LG 403 |
| 134148 | 195-003 | LG 400 |
| 134148 | 595-601* | LG 400 |
| 134148 | 95-601* | LG 423 |
| 134148M | 195-003 | LG 400 |
| 134148M | 595-601* | LG 400 |
| 134148M | 95-601* | LG 423 |
| 134148X | 195-003 | LG 400 |
| 134148X | 595-601* | LG 400 |
| 134148X | 95-601* | LG 423 |
| 134149 | 195-005 | LG 373 |
| 134768 | 195-021 | LG 468 |
| 134768 | 595-602* | LG 403 |
| 134768 | 95-602* | LG 403 |
| 134871 | 595-024* | LG 465 |
| 134871 | 95-051 | LG 465 |
| 136572 | 44-302 | LG 841 |
| 137380 | 595-609* | LG 461 |
| 137380 | 95-018 | LG 399 |
| 137380 | 95-609* | LG 376 |
| 138496 | 595-613* | LG 463 |
| 138496 | 95-036 | LG 463 |
| 138496 | 95-613* | LG 463 |
| 138497 | 195-003 | LG 400 |
| 138497 | 595-601* | LG 400 |
| 138497 | 95-601* | LG 423 |
| 138498 | 195-032 | LG 425 |
| 138498 | 596-900* | LG 380 |
| 138498 | 96-900* | LG 526 |
| 138791 | 195-032 | LG 425 |
| 138791 | 596-900* | LG 380 |
| 138791 | 96-900* | LG 526 |
| 138970 | 195-033 | LG 400 |
| 138970 | 595-601* | LG 400 |
| 138970 | 95-601* | LG 423 |
| 138971 | 195-032 | LG 425 |
| 138971 | 596-900* | LG 380 |
| 138971 | 96-900* | LG 526 |
| 139245 | 34-049 | LG 824 |
| 139774 | 195-003 | LG 400 |
| 139774 | 595-601* | LG 400 |
| 139774 | 95-601* | LG 423 |
| 139775 | 195-019 | LG 466 |
| 14035 | 72-162 | LG 1038 |
| 141114 | 195-021 | LG 468 |
| 141114 | 595-602* | LG 403 |
| 141114 | 95-602* | LG 403 |
| 143969 | 95-034 | LG 377 |
| 143978 | 95-031 | LG 377 |
| 143978X | 95-031 | LG 377 |
| 144767 | 595-614* | LG 459 |
| 144767 | 95-052 | LG 398 |
| 144767 | 95-614* | LG 375 |
| 145106 | 595-024* | LG 465 |
| 145106 | 95-051 | LG 465 |
| 145708 | 595-614* | LG 459 |
| 145708 | 95-045 | LG 374 |
| 145708 | 95-614* | LG 375 |
| 145755 | 46-322 | LG 701 |
| 145755 | 60-103 | LG 702 |
| 146323 | 46-322 | LG 701 |
| 146749 | 95-024 | LG 465 |
| 146749 | 95-051 | LG 465 |
| 148763 | 175-170 | LG 290 |
| 148763 | 75-170 | LG 290 |
| 150340 | 72-001 | LG 1031 |
| 150340 | 72-003 | LG 1031 |
| 150340 | 72-077 | LG 1031 |
| 150340 | 72-458 | LG 1031 |
| 150341 | 72-139 | LG 1032 |
| 152202 | 195-021 | LG 468 |
| 152202 | 595-602* | LG 403 |
| 152202 | 95-602* | LG 403 |
| 152443 | 595-614* | LG 459 |
| 152443 | 95-045 | LG 374 |
| 152443 | 95-614* | LG 375 |
| 153532 | 44-371 | LG 834 |
| 153535 | 44-370 | LG 834 |
| 156468 | 95-018 | LG 399 |
| 156493 | 78-053 | LG 824 |
| 156577 | 60-108 | LG 703 |
| 156581 | 60-108 | LG 703 |
| 15703 | 95-045 | LG 374 |
| 15703 | 95-052 | LG 398 |
| 157033 | 595-614* | LG 459 |
| 157033 | 95-052 | LG 398 |
| 157033 | 95-614* | LG 375 |
| 157101 | 195-021 | LG 468 |
| 157101 | 595-602* | LG 403 |
| 157101 | 95-602* | LG 403 |
| 159267 | 195-067 | LG 380 |
| 159267 | 95-071 | LG 402 |
| 159705 | 595-614* | LG 459 |
| 159705 | 95-052 | LG 398 |
| 159705 | 95-614* | LG 375 |
| 162778 | 60-107 | LG 703 |
| 163819 | 595-614* | LG 459 |
| 163819 | 95-045 | LG 374 |
| 163819 | 95-614* | LG 375 |
| 165746 | 72-312 | LG 1038 |
| 165833 | 95-057 | LG 380 |
| 165833 | 95-071 | LG 402 |
| 168552 | 60-108 | LG 703 |
| 169022 | 05-022 | LG 913 |
| 169676 | 60-525 | LG 702 |
| 170698 | 595-614* | LG 459 |
| 170698 | 95-052 | LG 398 |
| 170698 | 95-614* | LG 375 |
| 173435 | 44-371 | LG 834 |
| 173436 | 44-370 | LG 834 |
| 173437 | 78-054 | LG 824 |
| 173438 | 34-046 | LG 824 |
| 173901 | 78-053 | LG 824 |
| 173920 | 195-062 | LG 376 |
| 173920 | 596-615* | LG 529 |
| 173920 | 96-615* | LG 461 |
| 173921 | 95-068 | LG 376 |
| 174873 | 72-031 | LG 1038 |
| 175064 | 95-057 | LG 380 |
| 175064 | 95-071 | LG 402 |
| 175067 | 60-525 | LG 702 |
| 175820 | 78-052 | LG 824 |
| 176066 | 72-313 | LG 1038 |
| 176084 | 595-614* | LG 459 |
| 176084 | 95-052 | LG 398 |
| 176084 | 95-614* | LG 375 |
| 176135 | 95-057 | LG 380 |
| 176135 | 95-071 | LG 402 |
| 176556 | 60-107 | LG 703 |
| 177284 | 78-051 | LG 824 |
| 177865 | 44-370 | LG 834 |
| 177968 | 78-013 | LG 825 |
| 178138 | 115-029 | LG 255 |
| 179114 | 78-056 | LG 825 |
| 179748 | 05-021 | LG 913 |
| 180054 | 195-062 | LG 376 |
| 180054 | 596-615* | LG 529 |
| 180054 | 96-615* | LG 461 |
| 180459 | 595-622* | LG 468 |
| 180459 | 95-057 | LG 380 |
| 180767 | 72-014 | LG 1031 |
| 180773 | 72-076 | LG 1031 |
| 180775 | 72-001 | LG 1031 |
| 180775 | 72-077 | LG 1031 |
| 182158 | 60-000 | LG 702 |
| 183281 | 60-110 | LG 703 |
| 183567 | 60-109 | LG 703 |
| 184058 | 78-014 | LG 825 |
| 184588 | 46-322 | LG 701 |
| 184588 | 60-103 | LG 702 |
| 184596 | 46-322 | LG 701 |
| 187254 | 195-072 | LG 530 |
| 187254 | 595-605* | LG 422 |
| 187254 | 95-605* | LG 463 |
| 187255 | 595-605* | LG 422 |
| 187255 | 95-082 | LG 372 |
| 187255 | 95-605* | LG 463 |
| 187256 | 195-072 | LG 530 |
| 187256 | 595-605* | LG 422 |
| 187256 | 95-605* | LG 463 |
| 188606 | 72-162 | LG 1038 |
| 189028 | 195-067 | LG 380 |
| 189028 | 95-057 | LG 380 |
| 189028 | 95-071 | LG 402 |
| 189182 | 60-104 | LG 702 |
| 189403 | 76-039 | LG 1037 |
| 189993 | 78-014 | LG 825 |
| 191273 | 75-810 | LG 257 |
| 192682 | 595-602* | LG 403 |
| 192682 | 95-073 | LG 533 |
| 192682 | 95-602* | LG 403 |
| 192870 | 82-026 | LG 872 |
| 193144 | 72-001 | LG 1031 |
| 193144 | 72-003 | LG 1031 |
| 193144 | 72-077 | LG 1031 |
| 193144 | 72-458 | LG 1031 |
| 1935957 | 595-024* | LG 465 |
| 1935957 | 95-024 | LG 465 |
| 193957 | 195-003 | LG 400 |
| 193957 | 595-601* | LG 400 |
| 193957 | 95-601* | LG 423 |
| 194231X427 | 72-033 | LG 1031 |
| 194231X460 | 72-138 | LG 1032 |
| 195945 | 78-062 | LG 835 |
| 197257 | 60-526 | LG 702 |
| 204114-884 | 595-024* | LG 465 |
| 204114-884 | 95-044 | LG 465 |
| 204335256 | 195-021 | LG 468 |
| 204335256 | 595-602* | LG 403 |
| 204335256 | 95-602* | LG 403 |
| 204-3352-56 | 195-021 | LG 468 |
| 204-3352-56 | 595-602* | LG 403 |
| 204-3352-56 | 95-602* | LG 403 |
| 204340218 | 595-024* | LG 465 |
| 204340218 | 95-044 | LG 465 |
| 24541 | 595-605* | LG 422 |
| 24541 | 95-082 | LG 372 |
| 24541 | 95-605* | LG 463 |
| 24676 | 195-005 | LG 373 |
| 24692 | 195-003 | LG 400 |
| 24692 | 595-601* | LG 400 |
| 24692 | 95-601* | LG 423 |
| 25034 | 95-014 | LG 374 |
| 25034 | 95-607* | LG 397 |
| 25034R | 95-014 | LG 374 |
| 25034R | 95-607* | LG 397 |
| 25036 | 95-015 | LG 400 |
| 25036R | 95-015 | LG 400 |
| 33255 | 95-024 | LG 465 |
| 33255 | 95-051 | LG 465 |
| 33256 | 195-021 | LG 468 |
| 33256 | 595-602* | LG 403 |
| 33256 | 95-602* | LG 403 |
| 335256 | 95-023 | LG 380 |
| 335256 | 95-073 | LG 533 |
| 33954 | 195-072 | LG 530 |
| 33954 | 595-605* | LG 422 |
| 33954 | 95-605* | LG 463 |
| 340218 | 595-024* | LG 465 |
| 340218 | 95-044 | LG 465 |
| 358130861 | 46-325 | LG 701 |
| 364400 | 55-342 | LG 627 |
| 364500 | 55-343 | LG 627 |
| 403107 | 596-370* | LG 427 |
| 403107 | 95-074 | LG 533 |
| 403107 | 96-370* | LG 533 |
| 405380 | 195-070 | LG 469 |
| 405380 | 596-370* | LG 427 |
| 405380 | 96-370* | LG 533 |
| 406706 | 95-057 | LG 380 |
| 406706 | 95-071 | LG 402 |
| 406707 | 595-602* | LG 403 |
| 406707 | 95-073 | LG 533 |
| 406707 | 95-602* | LG 403 |
| 406712 | 195-067 | LG 380 |
| 406712 | 95-057 | LG 380 |
| 406712 | 95-071 | LG 402 |
| 406713 | 595-602* | LG 403 |
| 406713 | 95-023 | LG 380 |
| 406713 | 95-602* | LG 403 |
| 407755X427 | 72-136 | LG 1032 |
| 407755X460 | 72-137 | LG 1032 |
| 407816 | 60-102 | LG 702 |
| 408714 | 60-526 | LG 702 |
| 419273 | 595-807* | LG 382 |
| 419273X431 | 595-807* | LG 382 |
| 419274 | 595-807* | LG 382 |
| 420463 | 95-076 | LG 404 |
| 420463 | 95-615* | LG 426 |
| 421825 | 95-076 | LG 404 |
| 421825 | 95-615* | LG 426 |
| 422719 | 195-005 | LG 373 |
| 435111 | 60-526 | LG 702 |
| 440855 | 60-101 | LG 702 |
| 50 15 204 01 | 43-540 | LG 936 |
| 50 17 631 01 | 43-562 | LG 936 |
| 501 28 59-01 | 07-071 | LG 1020 |
| 501 485 402 | 33-213 | LG 787 |
| 501 58 42-01 | 33-158 | LG 949 |
| 501 76 31-01 | 43-562 | LG 936 |
| 501 80 71-05 | 30-148 | LG 198 |
| 501285901 | 07-071 | LG 1020 |
| 501285902 | 07-071 | LG 1020 |
| 501485402 | 33-204 | LG 787 |
| 501485402 | 33-213 | LG 787 |
| 5014854-02 | 33-204 | LG 787 |
| 5014854-02 | 33-213 | LG 787 |
| 501-485-402 | 33-204 | LG 787 |
| 501503402 | 72-001 | LG 1031 |
| 501503402 | 72-077 | LG 1031 |
| 501520401 | 43-540 | LG 936 |
| 501-5204-01 | 43-540 | LG 936 |
| 501520402 | 43-540 | LG 936 |
| 501526602 | 33-180 | LG 949 |
| 501584201 | 33-158 | LG 949 |
| 501-6661-01 | 55-342 | LG 627 |
| 501763101 | 43-562 | LG 936 |
| 501-7631-01 | 43-562 | LG 936 |
| 501807101 | 30-148 | LG 198 |
| 501807105 | 30-148 | LG 198 |
| 501877601 | 07-213 | LG 777 |
| 5018776-01 | 07-213 | LG 777 |
| 501-8776-01 | 07-213 | LG 777 |
| 501877602 | 07-213 | LG 777 |
| 5018776-02 | 07-213 | LG 777 |
| 501-8776-02 | 07-213 | LG 777 |
| 502161801 | 07-213 | LG 777 |
| 5021618-01 | 07-213 | LG 777 |
| 502-1681-01 | 07-213 | LG 777 |

X



* OREGON® Gator™ replacement blade

| OEM No. | OREGON | Page |
|---|---|---|
| **HUSQVARNA** | | |
| 503 09 83-01 | 33-158 | LG 949 |
| 503 09 83-02 | 33-158 | LG 949 |
| 503 10 24-05 | 31-002 | LG 933 |
| 503 22 00-01 | 04-008 | LG 686 |
| 503 44 32-01 | 07-213 | LG 777 |
| 503 44 72-03 | 30-124 | LG 197 |
| 503 54 39-01 | 31-004 | LG 929 |
| 503 71 79-01 | 33-180 | LG 949 |
| 503 71 82-01 | 33-158 | LG 949 |
| 503 717 901 | 33-180 | LG 949 |
| 503 7179 01 | 33-180 | LG 949 |
| 503 775 301 | 55-168 | LG 933 |
| 503 911 802 | 55-164 | LG 1020 |
| 503089702 | 33-180 | LG 949 |
| 503-08-97-021 | 33-180 | LG 949 |
| 503098301 | 33-158 | LG 949 |
| 503098302 | 33-158 | LG 949 |
| 503102403 | 31-002 | LG 933 |
| 503102405 | 31-002 | LG 933 |
| 5031024-05 | 31-002 | LG 933 |
| 503220001 | 04-008 | LG 686 |
| 5032200-01 | 04-008 | LG 686 |
| 503443201 | 07-213 | LG 777 |
| 503-4432-01 | 07-213 | LG 777 |
| 503447203 | 30-124 | LG 197 |
| 503447204 | 30-124 | LG 197 |
| 503509701 | 07-071 | LG 1020 |
| 503-5837-01 | 49-020 | LG 631 |
| 503-5971-01 | 49-020 | LG 631 |
| 503620201 | 33-254 | LG 785 |
| 503620202 | 33-254 | LG 785 |
| 503620203 | 33-254 | LG 785 |
| 503717901 | 33-180 | LG 949 |
| 503-71-79-01 | 33-180 | LG 949 |
| 503718201 | 33-157 | LG 738 |
| 503718201 | 33-158 | LG 949 |
| 503753-01 | 55-168 | LG 933 |
| 503775301 | 55-168 | LG 933 |
| 5037753-01 | 55-168 | LG 933 |
| 503848202 | 40-141 | LG 585 |
| 503-85-39-01 | 31-004 | LG 929 |
| 503901401 | 33-254 | LG 785 |
| 503911802 | 55-164 | LG 1020 |
| 5039118-02 | 55-164 | LG 1020 |
| 503917901 | 33-180 | LG 949 |
| 504364400 | 55-342 | LG 627 |
| 505175301 | 40-141 | LG 585 |
| 505289963 | 40-502 | LG 586 |
| 505-3167-31 | 55-342 | LG 627 |
| 505-3167-64 | 55-342 | LG 627 |
| 506 07 05-20 | 75-724 | LG 310 |
| 506 26 41-01 | 07-213 | LG 777 |
| 506 26 41-11 | 07-213 | LG 777 |
| 506033033 | 15-477 | LG 288 |
| 506070520 | 75-724 | LG 310 |
| 506169002 | 33-254 | LG 785 |
| 506269101 | 30-170 | LG 198 |
| 506-26-91-01 | 30-170 | LG 198 |
| 506342723 | 75-724 | LG 310 |
| 506347420 | 75-724 | LG 310 |
| 506372703 | 75-724 | LG 310 |
| 506372720 | 75-724 | LG 310 |
| 506668701 | 96-349* | LG 458 |
| 506676501 | 96-349* | LG 458 |
| 50668701 | 96-349* | LG 458 |
| 507432582 | 55-342 | LG 627 |
| 510417801 | 595-085* | LG 462 |
| 510417801 | 95-085 | LG 462 |
| 510417901 | 195-048 | LG 430 |
| 510417901 | 596-900* | LG 380 |
| 510417901 | 96-900* | LG 526 |
| 512258301 | 195-062 | LG 376 |
| 512258301 | 596-615* | LG 529 |
| 512258301 | 96-615* | LG 461 |
| 513897001 | 195-033 | LG 400 |
| 513897001 | 595-601* | LG 400 |
| 513897001 | 95-601* | LG 423 |
| 521981501 | 595-085* | LG 462 |
| 521981601 | 596-900* | LG 380 |
| 521981601 | 96-900* | LG 526 |
| 522037401 | 595-087* | LG 417 |
| 522829301 | 396-727* | LG 467 |
| 522829301 | 596-347* | LG 448 |
| 522829301 | 96-347* | LG 387 |
| 522936601 | 396-727* | LG 467 |
| 522936601 | 596-347* | LG 448 |
| 522936601 | 96-347* | LG 387 |
| 525341101 | 396-731* | LG 427 |
| 525525901 | 95-095* | LG 463 |
| 525544701 | 396-731* | LG 427 |
| 530-0351-78 | 55-342 | LG 627 |
| 531 30 73-92 | 83-503 | LG 818 |
| 531-0024-36 | 49-020 | LG 631 |
| 531002513 | 80-018 | LG 852 |
| 531004044 | 40-141 | LG 585 |
| 531005011 | 96-349* | LG 458 |
| 531005085 | 195-005 | LG 373 |
| 5310053007 | 40-141 | LG 585 |
| 531007562 | 75-099 | LG 262 |
| 531300233 | 40-141 | LG 585 |
| 531300765 | 195-067 | LG 380 |
| 531301252 | 195-021 | LG 468 |
| 531301252 | 595-602* | LG 403 |
| 531301252 | 95-602* | LG 403 |
| 531307212 | 595-024* | LG 465 |
| 531307212 | 95-044 | LG 465 |
| 531307214 | 195-021 | LG 468 |
| 531307214 | 595-602* | LG 403 |
| 531307214 | 95-602* | LG 403 |
| 531307220 | 195-003 | LG 400 |
| 531307220 | 595-601* | LG 400 |
| 531307220 | 95-601* | LG 423 |
| 531307221 | 195-033 | LG 400 |
| 531307221 | 595-601* | LG 400 |
| 531307221 | 95-601* | LG 423 |
| 531307223 | 195-005 | LG 373 |
| 531307224 | 195-032 | LG 425 |
| 531307224 | 596-900* | LG 380 |
| 531307224 | 96-900* | LG 526 |
| 531307235 | 95-071 | LG 402 |
| 531307236 | 195-021 | LG 468 |
| 531307236 | 595-602* | LG 403 |
| 531307236 | 95-602* | LG 403 |
| 531307237 | 195-021 | LG 468 |
| 531307237 | 595-602* | LG 403 |
| 531307237 | 95-602* | LG 403 |
| 531309715 | 596-370* | LG 427 |
| 531309715 | 95-074 | LG 533 |
| 531309715 | 96-370* | LG 533 |
| 532 10 90-81 | 33-334 | LG 730 |
| 532 10 90-81 | 33-335 | LG 730 |
| 532 10 90-81 | 33-336 | LG 730 |
| 532 10 97-48 | 33-317-0 | LG 729 |
| 532 10 99-46 | 33-334 | LG 730 |
| 532 10 99-46 | 33-335 | LG 730 |
| 532 10 99-46 | 33-336 | LG 730 |
| 532 13 84-06 | 33-334 | LG 730 |
| 532 13 84-06 | 33-335 | LG 730 |
| 532 13 84-06 | 33-336 | LG 730 |
| 532 14 61-54 | 33-334 | LG 730 |
| 532 14 61-54 | 33-335 | LG 730 |
| 532 14 61-54 | 33-336 | LG 730 |
| 532 15 03-40 | 72-001 | LG 1031 |
| 532 15 03-40 | 72-077 | LG 1031 |
| 532 18 07-75 | 72-001 | LG 1031 |
| 532 18 07-75 | 72-077 | LG 1031 |
| 532 19 31-44 | 72-001 | LG 1031 |
| 532 19 31-44 | 72-003 | LG 1031 |
| 532 19 31-44 | 72-077 | LG 1031 |
| 532 19 31-44 | 72-458 | LG 1031 |
| 532025034 | 95-014 | LG 374 |
| 532025034 | 95-607* | LG 397 |
| 5320868-70 | 72-456 | LG 1036 |
| 532-0869-43 | 72-456 | LG 1036 |
| 532102914 | 33-317-0 | LG 729 |
| 532106085 | 75-107 | LG 254 |
| 532106635 | 95-014 | LG 374 |
| 532106635 | 95-607* | LG 397 |
| 532106734 | 05-020 | LG 913 |
| 532109081 | 33-335 | LG 730 |
| 532109748 | 33-317-0 | LG 729 |
| 532109946 | 33-334 | LG 730 |
| 532109946 | 33-335 | LG 730 |
| 532-1099-46 | 33-331 | LG 730 |
| 532110832 | 33-335 | LG 730 |
| 532110883 | 75-108 | LG 289 |
| 532110884 | 75-194 | LG 289 |
| 532114884 | 595-024* | LG 465 |
| 532114884 | 95-044 | LG 465 |
| 532121263 | 95-015 | LG 400 |
| 532121263 | 95-031 | LG 377 |
| 532121798 | 95-027 | LG 398 |
| 532122265 | 95-014 | LG 374 |
| 532122265 | 95-607* | LG 397 |
| 532123713X | 05-020 | LG 913 |
| 532124970 | 75-890 | LG 289 |
| 532125907 | 75-151 | LG 308 |
| 532125907 | 75-171 | LG 289 |
| 532126338 | 95-034 | LG 377 |
| 532126520 | 75-935 | LG 255 |
| 532127783 | 34-049 | LG 824 |
| 532127841 | 595-613* | LG 463 |
| 532127841 | 95-036 | LG 463 |
| 532127841 | 95-613* | LG 463 |
| 532127842 | 195-033 | LG 400 |
| 532127842 | 595-601* | LG 400 |
| 532127842 | 95-601* | LG 423 |
| 532129206 | 44-371 | LG 834 |
| 532129277 | 595-024* | LG 465 |
| 532129277 | 95-051 | LG 465 |
| 532129861 | 44-370 | LG 834 |
| 532130652 | 595-614* | LG 459 |
| 532130652 | 95-006 | LG 397 |
| 532130652 | 95-045 | LG 374 |
| 532130652 | 95-614* | LG 375 |
| 532130794 | 82-014 | LG 871 |
| 532130794 | 82-225 | LG 871 |
| 532130801 | 75-167 | LG 289 |
| 532130861 | 46-325 | LG 701 |
| 532130969 | 75-106 | LG 261 |
| 532131264 | 75-097 | LG 289 |
| 532131290 | 75-099 | LG 262 |
| 532131290 | 75-936 | LG 290 |
| 532131322 | 595-601* | LG 400 |
| 532131322 | 95-047 | LG 378 |
| 532131322 | 95-601* | LG 423 |
| 532131323 | 195-048 | LG 430 |
| 532131323 | 596-900* | LG 380 |
| 532131323 | 96-900* | LG 526 |
| 532131494 | 34-046 | LG 824 |
| 532132801 | 75-889 | LG 252 |
| 532133035 | 75-890 | LG 289 |
| 532133107 | 60-105 | LG 702 |
| 532133346 | 595-024* | LG 465 |
| 532133346 | 95-051 | LG 465 |
| 532133957 | 72-094 | LG 1042 |
| 532134148 | 195-003 | LG 400 |
| 532134148 | 595-601* | LG 400 |
| 532134148 | 95-601* | LG 423 |
| 532134149 | 195-005 | LG 373 |
| 532134768 | 195-021 | LG 468 |
| 532134768 | 595-602* | LG 403 |
| 532134768 | 95-602* | LG 403 |
| 532134871 | 595-024* | LG 465 |
| 532134871 | 95-051 | LG 465 |
| 532136572 | 44-302 | LG 841 |
| 532136818 | 82-680 | LG 870 |
| 532136819 | 82-680 | LG 870 |
| 532137078 | 75-164 | LG 262 |
| 532137153 | 175-195 | LG 289 |
| 532137153 | 75-195 | LG 254 |
| 532137380 | 595-609* | LG 461 |
| 532137380 | 95-018 | LG 399 |
| 532137380 | 95-609* | LG 376 |
| 532138255 | 75-167 | LG 289 |
| 532138406 | 33-335 | LG 730 |
| 532-1384-06 | 33-331 | LG 730 |
| 532138496 | 595-613* | LG 463 |
| 532138496 | 95-027 | LG 398 |
| 532138496 | 95-036 | LG 463 |
| 532138496 | 95-613* | LG 463 |
| 532138497 | 195-033 | LG 400 |
| 532138497 | 595-601* | LG 400 |
| 532138497 | 95-601* | LG 423 |
| 532138498 | 195-032 | LG 425 |
| 532138498 | 596-900* | LG 380 |
| 532138498 | 96-900* | LG 526 |
| 532138969 | 595-613* | LG 463 |
| 532138969 | 95-036 | LG 463 |
| 532138969 | 95-613* | LG 463 |
| 532138970 | 195-033 | LG 400 |
| 532138970 | 595-601* | LG 400 |
| 532138970 | 95-601* | LG 423 |
| 532138971 | 195-032 | LG 425 |
| 532138971 | 596-900* | LG 380 |
| 532138971 | 96-900* | LG 526 |
| 532139245 | 34-049 | LG 824 |
| 532139573 | 175-169 | LG 290 |
| 532139573 | 75-169 | LG 290 |
| 532139774 | 195-003 | LG 400 |
| 532139774 | 595-601* | LG 400 |
| 532139774 | 95-601* | LG 423 |
| 532139775 | 195-019 | LG 466 |
| 532140218 | 75-196 | LG 290 |
| 532140294 | 175-000 | LG 262 |
| 532140294 | 75-000 | LG 262 |
| 532-1404-01 | 33-099 | LG 946 |
| 532141114 | 195-021 | LG 468 |
| 532141114 | 595-602* | LG 403 |
| 532141114 | 95-602* | LG 403 |
| 532143651 | 82-510 | LG 872 |
| 532-143651 | 82-510 | LG 872 |
| 532143669 | 95-034 | LG 377 |
| 532143969 | 95-034 | LG 377 |
| 532143978 | 95-031 | LG 377 |
| 532144200 | 75-099 | LG 262 |
| 532144200 | 75-936 | LG 290 |
| 532144767 | 595-614* | LG 459 |
| 532144767 | 95-052 | LG 398 |
| 532144767 | 95-614* | LG 375 |
| 532144959 | 175-197 | LG 290 |
| 532144959 | 75-197 | LG 262 |
| 532145106 | 595-024* | LG 465 |
| 532145106 | 95-051 | LG 465 |
| 532145673 | 33-334 | LG 730 |
| 532145708 | 595-614* | LG 459 |
| 532145708 | 95-045 | LG 374 |
| 532145708 | 95-614* | LG 375 |
| 532145755 | 46-322 | LG 701 |
| 532145755 | 60-103 | LG 702 |
| 532146154 | 33-334 | LG 730 |
| 532146154 | 33-335 | LG 730 |
| 532146323 | 46-322 | LG 701 |
| 532146527 | 75-164 | LG 262 |
| 532148763 | 75-170 | LG 290 |
| 532150341 | 72-139 | LG 1032 |
| 532152202 | 195-021 | LG 468 |
| 532152202 | 595-602* | LG 403 |
| 532152202 | 95-602* | LG 403 |

X

# 2019 OEM X-Reference

| OEM No. | OREGON | Page |
|---|---|---|
| **HUSQVARNA** | | |
| 532152443 | 595-614* | LG 459 |
| 532152443 | 95-045 | LG 374 |
| 532152443 | 95-614* | LG 375 |
| 532153532 | 44-371 | LG 834 |
| x532153535 | 44-370 | LG 834 |
| 532156493 | 78-053 | LG 824 |
| 532156581 | 60-108 | LG 703 |
| 532157033 | 595-614* | LG 459 |
| 532157033 | 95-052 | LG 398 |
| 532157033 | 95-614* | LG 375 |
| 532157353 | 595-614* | LG 459 |
| 532157353 | 95-052 | LG 398 |
| 532157353 | 95-614* | LG 375 |
| 532157769 | 75-164 | LG 262 |
| 532159267 | 95-071 | LG 402 |
| 532159705 | 595-614* | LG 459 |
| 532159705 | 95-052 | LG 398 |
| 532159705 | 95-614* | LG 375 |
| 532160855 | 75-167 | LG 289 |
| 532160899 | 33-112 | LG 735 |
| 532162778 | 60-107 | LG 703 |
| 532163819 | 95-045 | LG 374 |
| 532163819 | 95-052 | LG 398 |
| 532165632 | 75-897 | LG 262 |
| 532165746 | 72-312 | LG 1038 |
| 532165833 | 95-057 | LG 380 |
| 532166060 | 75-911 | LG 262 |
| 532168552 | 60-108 | LG 703 |
| 532169676 | 60-525 | LG 702 |
| 532170698 | 595-614* | LG 459 |
| 532170698 | 95-052 | LG 398 |
| 532170698 | 95-614* | LG 375 |
| 532173435 | 44-371 | LG 834 |
| 532173436 | 44-370 | LG 834 |
| 532173437 | 78-054 | LG 824 |
| 532173901 | 78-053 | LG 824 |
| 532173920 | 195-062 | LG 376 |
| 532173920 | 596-615* | LG 529 |
| 532173920 | 96-615* | LG 461 |
| 532173921 | 596-615* | LG 529 |
| 532173921 | 95-068 | LG 376 |
| 532174356 | 82-015 | |
| 532174358 | 82-015 | |
| 532174368 | 175-912 | LG 291 |
| 532174368 | 75-912 | LG 255 |
| 532174873 | 72-031 | LG 1038 |
| 532174883 | 175-913 | LG 262 |
| 532174883 | 75-913 | LG 291 |
| 532175064 | 595-621* | LG 467 |
| 532175064 | 95-057 | LG 380 |
| 532175064 | 95-071 | LG 402 |
| 532175064 | 95-621* | LG 402 |
| 532175067 | 60-525 | LG 702 |
| 532175436 | 75-914 | LG 291 |
| 532175820 | 78-052 | LG 824 |
| 532176066 | 72-313 | LG 1038 |
| 532176084 | 595-614* | LG 459 |
| 532176084 | 95-052 | LG 398 |
| 532176084 | 95-614* | LG 375 |
| 532176135 | 95-057 | LG 380 |
| 532176135 | 95-071 | LG 402 |
| 532176556 | 60-107 | LG 703 |
| 532177865 | 44-370 | LG 834 |
| 532177968 | 78-013 | LG 825 |
| 532178138 | 15-029 | LG 291 |
| 532179114 | 78-056 | LG 825 |
| 532179748 | 05-021 | LG 913 |
| 532179831 | 76-076 | LG 727 |
| 532180054 | 195-062 | LG 376 |
| 532180054 | 596-615* | LG 529 |
| 532180054 | 96-615* | LG 461 |
| 532180459 | 595-622* | LG 468 |
| 532180459 | 95-057 | LG 380 |
| 532180767 | 72-014 | LG 1031 |
| 532180773 | 72-076 | LG 1031 |
| 532180775 | 72-077 | LG 1031 |
| 532180808 | 175-654 | LG 263 |
| 532180808 | 75-654 | LG 263 |
| 532183281 | 60-110 | LG 703 |
| 532183567 | 60-109 | LG 703 |
| 532184058 | 78-014 | LG 825 |
| 532184588 | 46-322 | LG 701 |
| 532184588 | 60-103 | LG 702 |
| 532184590 | 65-002 | LG 340 |
| 532184596 | 46-322 | LG 701 |
| 53218724 | 78-051 | LG 824 |
| 532187254 | 195-072 | LG 530 |
| 532187254 | 595-605* | LG 422 |
| 532187254 | 95-605* | LG 463 |
| 532187255 | 595-605* | LG 422 |
| 532187255 | 95-082 | LG 372 |
| 532187255 | 95-605* | LG 463 |
| 532187256 | 195-072 | LG 530 |
| 532187256 | 595-605* | LG 422 |
| 532187256 | 95-605* | LG 463 |
| 532187292 | 82-026 | LG 872 |
| 532188606 | 72-162 | LG 1038 |
| 5321886-06 | 72-162 | LG 1038 |
| 532189028 | 195-067 | LG 380 |
| 532189028 | 95-057 | LG 380 |
| 532189182 | 60-104 | LG 702 |
| 532189993 | 78-014 | LG 825 |
| 532191273 | 175-810 | LG 263 |
| 532191273 | 75-810 | LG 257 |
| 532192507 | 33-334 | LG 730 |
| 532192682 | 595-602* | LG 403 |
| 532192682 | 95-073 | LG 533 |
| 532192682 | 95-602* | LG 403 |
| 532192870 | 82-026 | LG 872 |
| 532193144 | 72-001 | LG 1031 |
| 532193144 | 72-003 | LG 1031 |
| 532193144 | 72-077 | LG 1031 |
| 532193144 | 72-458 | LG 1031 |
| 532193214 | 75-892 | LG 255 |
| 532193707 | 65-002 | LG 340 |
| 532193957 | 195-003 | LG 400 |
| 532193957 | 595-601* | LG 400 |
| 532193957 | 95-024 | LG 465 |
| 532193957 | 95-601* | LG 423 |
| 532196103 | 115-205 | LG 258 |
| 532196103 | 75-893 | LG 263 |
| 532196857 | 15-020 | LG 291 |
| 532197242 | 175-894 | LG 291 |
| 532197242 | 75-894 | LG 263 |
| 532197253 | 15-021 | LG 256 |
| 532197253 | 175-895 | LG 263 |
| 532197253 | 75-895 | LG 263 |
| 532197257 | 60-526 | LG 702 |
| 532355256 | 195-021 | LG 468 |
| 532355256 | 595-602* | LG 403 |
| 532355256 | 95-602* | LG 403 |
| 532403107 | 596-370* | LG 427 |
| 532403107 | 95-074 | LG 533 |
| 532403107 | 96-370* | LG 533 |
| 532405143 | 15-022 | LG 292 |
| 532405380 | 195-070 | LG 469 |
| 532405380 | 596-370* | LG 427 |
| 532405380 | 96-370* | LG 533 |
| 532406707 | 595-602* | LG 403 |
| 532406707 | 95-073 | LG 533 |
| 532406707 | 95-602* | LG 403 |
| 532406712 | 195-067 | LG 380 |
| 532406712 | 195-089 | LG 467 |
| 532406712 | 595-621* | LG 467 |
| 532406712 | 95-057 | LG 380 |
| 532406712 | 95-071 | LG 402 |
| 532406712 | 95-621* | LG 402 |
| 532-40-67-12 | 95-071 | LG 402 |
| 532406713 | 595-602* | LG 403 |
| 532406713 | 95-023 | LG 380 |
| 532406713 | 95-602* | LG 403 |
| 532407816 | 60-102 | LG 702 |
| 532408714 | 60-526 | LG 702 |
| 532419271 | 75-935 | LG 255 |
| 532419273 | 595-807* | LG 382 |
| 532419274 | 595-807* | LG 382 |
| 532420097 | 65-008 | LG 340 |
| 532420463 | 95-076 | LG 404 |
| 532420463 | 95-615* | LG 426 |
| 532421825 | 95-076 | LG 404 |
| 532421825 | 95-615* | LG 426 |
| 532422719 | 195-005 | LG 373 |
| 532428460 | 60-101 | LG 702 |
| 532429636 | 15-023 | LG 256 |
| 532435111 | 60-526 | LG 702 |
| 532437601 | 95-076 | LG 404 |
| 532437601 | 95-615* | LG 426 |
| 532440855 | 60-101 | LG 702 |
| 532700972 | 595-024* | LG 465 |
| 532700972 | 95-051 | LG 465 |
| 532751646 | 595-024* | LG 465 |
| 532751646 | 95-051 | LG 465 |
| 532752233 | 595-024* | LG 465 |
| 532752233 | 95-044 | LG 465 |
| 532752234 | 195-021 | LG 468 |
| 532752234 | 595-602* | LG 403 |
| 532752234 | 95-602* | LG 403 |
| 532850972 | 595-024* | LG 465 |
| 532850972 | 95-024 | LG 465 |
| 532850973 | 595-602* | LG 403 |
| 532850973 | 95-023 | LG 380 |
| 532850973 | 95-602* | LG 403 |
| 532851462 | 60-000 | LG 702 |
| 532851463 | 60-000 | LG 702 |
| 535126520 | 75-935 | LG 255 |
| 537 07 95-01 | 56-022 | LG 686 |
| 537040421 | 56-022 | LG 686 |
| 537-0404-21 | 56-022 | LG 686 |
| 537044102 | 56-022 | LG 686 |
| 537079501 | 56-022 | LG 686 |
| 537079502 | 56-022 | LG 686 |
| 539 10 29-14 | 33-317-0 | LG 729 |
| 539100026 | 75-269 | LG 252 |
| 539100340 | 396-716* | LG 451 |
| 539100340 | 596-310* | LG 447 |
| 539100340 | 96-310* | LG 444 |
| 539100340 | 99-127 | LG 375 |
| 539100341 | 396-726* | LG 391 |
| 539100341 | 596-344* | LG 495 |
| 539100341 | 91-256 | LG 437 |
| 539100341 | 96-344* | LG 536 |
| 539101366 | 396-716* | LG 451 |
| 539101366 | 596-310* | LG 447 |
| 539101366 | 96-310* | LG 444 |
| 539101366 | 99-127 | LG 375 |
| 539101485 | 396-726* | LG 391 |
| 539101485 | 596-344* | LG 495 |
| 539101485 | 91-256 | LG 437 |
| 539101485 | 96-344* | LG 536 |
| 539101733 | 396-727* | LG 467 |
| 539101733 | 596-347* | LG 448 |
| 539101733 | 91-308 | LG 467 |
| 539101733 | 96-347* | LG 387 |
| 539101956 | 75-269 | LG 252 |
| 539102093 | 396-727* | LG 467 |
| 539102093 | 596-347* | LG 448 |
| 539102093 | 91-308 | LG 467 |
| 539102093 | 96-347* | LG 387 |
| 539102603 | 33-115 | LG 738 |
| 539103274 | 95-058 | LG 458 |
| 539103687 | 75-819 | LG 292 |
| 539105476 | 396-731* | LG 427 |
| 539105571 | 396-731* | LG 427 |
| 539105571 | 92-169 | LG 497 |
| 539105711 | 396-727* | LG 467 |
| 539105711 | 596-347* | LG 448 |
| 539105711 | 95-078 | LG 496 |
| 539105711 | 96-347* | LG 387 |
| 539105712 | 396-726* | LG 391 |
| 539105712 | 596-344* | LG 495 |
| 539105712 | 91-256 | LG 437 |
| 539105712 | 96-344* | LG 536 |
| 539105714 | 396-727* | LG 467 |
| 539105714 | 596-347* | LG 448 |
| 539105714 | 96-347* | LG 387 |
| 539106038 | 95-058 | LG 458 |
| 539106040 | 396-716* | LG 451 |
| 539106040 | 596-310* | LG 447 |
| 539106040 | 96-310* | LG 444 |
| 539106040 | 99-127 | LG 375 |
| 539106041 | 396-716* | LG 451 |
| 539106041 | 596-310* | LG 447 |
| 539106041 | 96-310* | LG 444 |
| 539107519 | 195-062 | LG 376 |
| 539107519 | 596-615* | LG 529 |
| 539107519 | 96-615* | LG 461 |
| 539107610 | 72-094 | LG 1042 |
| 539109756 | 396-716* | LG 451 |
| 539109756 | 596-310* | LG 447 |
| 539109756 | 96-310* | LG 444 |
| 539110324 | 195-003 | LG 400 |
| 539110324 | 595-601* | LG 400 |
| 539110324 | 95-601* | LG 423 |
| 539110410 | 15-024 | LG 292 |
| 539110411 | 15-472 | LG 259 |
| 539110460 | 195-005 | LG 373 |
| 539110745 | 396-731* | LG 427 |
| 539110832 | 15-473 | LG 288 |
| 539110859 | 75-269 | LG 252 |
| 539111878 | 195-067 | LG 380 |
| 539111878 | 95-057 | LG 380 |
| 539111949 | 75-819 | LG 292 |
| 539112053 | 195-072 | LG 530 |
| 539112053 | 595-605* | LG 422 |
| 539112053 | 95-605* | LG 463 |
| 539112078 | 595-088* | LG 458 |
| 539112078 | 95-084 | LG 494 |
| 539112078 | 95-088* | LG 458 |
| 539112079 | 595-085* | LG 462 |
| 539112079 | 95-085 | LG 462 |
| 539112529 | 15-474 | LG 288 |
| 539112787 | 595-621* | LG 467 |
| 539112787 | 95-057 | LG 380 |
| 539112787 | 95-621* | LG 402 |
| 539113312 | 596-900* | LG 380 |
| 539113312 | 95-086 | LG 425 |
| 539113312 | 96-900* | LG 526 |
| 539113425 | 595-087* | LG 417 |
| 539113425 | 95-087 | LG 460 |
| 53911342529 | 595-087* | LG 417 |
| 53911342529 | 95-087 | LG 460 |
| 539114557 | 15-129 | LG 292 |
| 544018401 | 33-254 | LG 785 |
| 544080204 | 595-024* | LG 465 |
| 544080204 | 95-024 | LG 465 |
| 544175710 | 396-800* | LG 464 |
| 544175810 | 396-798* | LG 469 |
| 544889702 | 55-164 | LG 1020 |
| 55139204 | 595-024* | LG 465 |
| 55139204 | 95-024 | LG 465 |
| 573953001 | 595-088* | LG 458 |
| 573953001 | 95-088* | LG 458 |
| 574292401 | 195-072 | LG 530 |
| 574292401 | 595-605* | LG 422 |
| 574292401 | 95-605* | LG 463 |
| 574481401 | 396-731* | LG 427 |
| 574860902 | 396-731* | LG 427 |
| 574860902 | 92-169 | LG 497 |
| 574870801 | 595-077* | LG 461 |

X



* OREGON® Gator™ replacement blade

## HUSQVARNA

| OEM No. | OREGON | Page |
|---|---|---|
| 574870801 | 95-077 | LG 461 |
| 575157101 | 195-021 | LG 468 |
| 575157101 | 595-602* | LG 403 |
| 575157101 | 95-602* | LG 403 |
| 575164601 | 595-024* | LG 465 |
| 575164601 | 95-051 | LG 465 |
| 575240701 | 595-077* | LG 461 |
| 575265901 | 95-092 | LG 423 |
| 575937901 | 195-070 | LG 469 |
| 575937901 | 596-370* | LG 427 |
| 575937901 | 96-370* | LG 533 |
| 575938201 | 195-062 | LG 376 |
| 575938201 | 596-615* | LG 529 |
| 575938201 | 96-615* | LG 461 |
| 575938301 | 195-062 | LG 376 |
| 575938301 | 596-615* | LG 529 |
| 575938301 | 96-615* | LG 461 |
| 575938401 | 195-072 | LG 530 |
| 575938401 | 595-605* | LG 422 |
| 575938401 | 95-605* | LG 463 |
| 575938501 | 595-605* | LG 422 |
| 575938501 | 95-082 | LG 372 |
| 575938501 | 95-605* | LG 463 |
| 577146101 | 595-088* | LG 458 |
| 577146101 | 95-088* | LG 458 |
| 577146201 | 195-062 | LG 376 |
| 577146201 | 596-615* | LG 529 |
| 577146201 | 96-615* | LG 461 |
| 577203116 | 75-167 | LG 289 |
| 577240301 | 595-085* | LG 462 |
| 577240301 | 95-085 | LG 462 |
| 577240401 | 596-900* | LG 380 |
| 577240401 | 95-086 | LG 425 |
| 577240401 | 96-900* | LG 526 |
| 580244001 | 95-615* | LG 426 |
| 580258101 | 195-067 | LG 380 |
| 580258101 | 595-621* | LG 467 |
| 580258101 | 95-621* | LG 402 |
| 580258102 | 195-067 | LG 380 |
| 580258102 | 595-621* | LG 467 |
| 580258102 | 95-621* | LG 402 |
| 581055502 | 95-092 | LG 423 |
| 581116301 | 195-003 | LG 400 |
| 581116301 | 595-601* | LG 400 |
| 581116301 | 95-601* | LG 423 |
| 581116302 | 195-003 | LG 400 |
| 581116302 | 195-033 | LG 400 |
| 581694101 | 195-067 | LG 380 |
| 581694101 | 595-621* | LG 467 |
| 581694101 | 95-057 | LG 380 |
| 581694101 | 95-621* | LG 402 |
| 582931401 | 595-602* | LG 403 |
| 582931401 | 95-073 | LG 533 |
| 582931401 | 95-602* | LG 403 |
| 584451901 | 175-810 | LG 263 |
| 584451901 | 75-810 | LG 257 |
| 584453101 | 15-022 | LG 292 |
| 585587701 | 95-615* | LG 426 |
| 58618102 | 595-623* | LG 466 |
| 586230101 | 195-032 | LG 425 |
| 586230101 | 596-900* | LG 380 |
| 586230101 | 96-900* | LG 526 |
| 586859601 | 195-093 | LG 466 |
| 586918101 | 595-623* | LG 466 |
| 586918101 | 95-623 | LG 466 |
| 586918102 | 95-623 | LG 466 |
| 601000391 | 78-021 | LG 832 |
| 601001974 | 40-502 | LG 586 |
| 601002454 | 40-502 | LG 586 |
| 69229 | 595-024* | LG 465 |
| 69229 | 95-024 | LG 465 |
| 700417 | 60-004 | LG 701 |
| 700953 | 72-001 | LG 1031 |
| 700953 | 72-003 | LG 1031 |
| 700953 | 72-077 | LG 1031 |
| 700953 | 72-458 | LG 1031 |
| 700973 | 195-021 | LG 468 |
| 700973 | 595-602* | LG 403 |
| 700973 | 95-602* | LG 403 |
| 701211 | 595-024* | LG 465 |
| 701211 | 95-024 | LG 465 |
| 701213 | 595-602* | LG 403 |
| 701213 | 95-023 | LG 380 |
| 701213 | 95-602* | LG 403 |
| 701575 | 72-003 | LG 1031 |
| 701575 | 72-458 | LG 1031 |
| 7133203 | 595-024* | LG 465 |
| 7133203 | 95-024 | LG 465 |
| 7133219 | 595-602* | LG 403 |
| 7133219 | 95-023 | LG 380 |
| 7133219 | 95-602* | LG 403 |
| 7133269 | 195-021 | LG 468 |
| 7133269 | 595-602* | LG 403 |
| 7133269 | 95-602* | LG 403 |
| 751646 | 595-024* | LG 465 |
| 751646 | 95-051 | LG 465 |
| 752233 | 595-024* | LG 465 |
| 752233 | 95-044 | LG 465 |
| 752234 | 195-021 | LG 468 |
| 752234 | 595-602* | LG 403 |
| 752234 | 95-602* | LG 403 |
| 77193957 | 595-024* | LG 465 |
| 77193957 | 95-024 | LG 465 |
| 777134149 | 195-005 | LG 373 |
| 777187256 | 195-072 | LG 530 |
| 777187256 | 595-605* | LG 422 |
| 777187256 | 95-605* | LG 463 |
| 777193957 | 195-003 | LG 400 |
| 777193957 | 595-601* | LG 400 |
| 777193957 | 95-601* | LG 423 |
| 777405380 | 195-070 | LG 469 |
| 777405380 | 596-370* | LG 427 |
| 777405380 | 96-370* | LG 533 |
| 777419274 | 595-807* | LG 382 |
| 850972 | 595-024* | LG 465 |
| 850972 | 95-024 | LG 465 |
| 8509725 | 595-024* | LG 465 |
| 8509725 | 95-024 | LG 465 |
| 850973 | 595-602* | LG 403 |
| 850973 | 95-023 | LG 380 |
| 850973 | 95-602* | LG 403 |
| 851462 | 60-000 | LG 702 |
| 917063 | 33-114 | LG 734 |
| 917121263X | 95-031 | LG 377 |
| 917121263XMS | 95-031 | LG 377 |
| 917122265X | 95-014 | LG 374 |
| 91712265X | 95-014 | LG 374 |
| 91712265X | 95-607* | LG 397 |
| 917126338X | 95-034 | LG 377 |
| 917127842 | 195-033 | LG 400 |
| 917127842 | 595-601* | LG 400 |
| 917127842 | 95-601* | LG 423 |
| 917127843 | 195-032 | LG 425 |
| 917127843 | 596-900* | LG 380 |
| 917127843 | 96-900* | LG 526 |
| 917129277 | 595-024* | LG 465 |
| 917129277 | 95-051 | LG 465 |
| 917130652MS | 95-006 | LG 397 |
| 917131322 | 595-601* | LG 400 |
| 917131322 | 95-047 | LG 378 |
| 917131322 | 95-601* | LG 423 |
| 917131323 | 195-032 | LG 425 |
| 917131323 | 596-900* | LG 380 |
| 917131323 | 96-900* | LG 526 |
| 917131694 | 595-024* | LG 465 |
| 917131694 | 95-051 | LG 465 |
| 917134148MS | 195-003 | LG 400 |
| 917134148MS | 595-601* | LG 400 |
| 917134148MS | 95-601* | LG 423 |
| 917134148X | 195-003 | LG 400 |
| 917134148X | 595-601* | LG 400 |
| 917134148X | 95-601* | LG 423 |
| 917137380MS | 595-609* | LG 461 |
| 917137380MS | 95-018 | LG 399 |
| 917137380MS | 95-609* | LG 376 |
| 917137380P | 595-609* | LG 461 |
| 917137380P | 95-018 | LG 399 |
| 917137380P | 95-609* | LG 376 |
| 917138489MS | 195-032 | LG 425 |
| 917138489MS | 596-900* | LG 380 |
| 917138489MS | 96-900* | LG 526 |
| 917138497MS | 195-033 | LG 400 |
| 917138497MS | 595-601* | LG 400 |
| 917138497MS | 95-601* | LG 423 |
| 917138970 | 195-033 | LG 400 |
| 917138970 | 595-601* | LG 400 |
| 917138970 | 95-601* | LG 423 |
| 917139774 | 195-003 | LG 400 |
| 917139774 | 595-601* | LG 400 |
| 917139774 | 95-601* | LG 423 |
| 917139774MS | 195-003 | LG 400 |
| 917139774MS | 595-601* | LG 400 |
| 917139774MS | 95-601* | LG 423 |
| 917139775P | 195-019 | LG 466 |
| 917144767 | 595-614* | LG 459 |
| 917144767 | 95-052 | LG 398 |
| 917144767 | 95-614* | LG 375 |
| 917145106CS | 595-024* | LG 465 |
| 917145106CS | 95-051 | LG 465 |
| 917145708 | 95-045 | LG 374 |
| 917145708CS | 595-614* | LG 459 |
| 917145708CS | 95-045 | LG 374 |
| 917145708CS | 95-614* | LG 375 |
| 917145708MS | 595-614* | LG 459 |
| 917145708MS | 95-045 | LG 374 |
| 917145708MS | 95-614* | LG 375 |
| 917145755 | 60-103 | LG 702 |
| 917150340 | 72-001 | LG 1031 |
| 917150340 | 72-003 | LG 1031 |
| 917150340 | 72-077 | LG 1031 |
| 917150340 | 72-458 | LG 1031 |
| 917152443P | 595-614* | LG 459 |
| 917152443P | 95-045 | LG 374 |
| 917152443P | 95-614* | LG 375 |
| 917157033 | 595-614* | LG 459 |
| 917157033 | 95-052 | LG 398 |
| 917157033 | 95-614* | LG 375 |
| 917157101 | 195-021 | LG 468 |
| 917157101 | 595-602* | LG 403 |
| 917157101 | 95-602* | LG 403 |
| 917163819 | 595-614* | LG 459 |
| 917163819 | 95-045 | LG 374 |
| 917163819 | 95-614* | LG 375 |
| 917169676 | 60-525 | LG 702 |
| 917170698 | 595-614* | LG 459 |
| 917170698 | 95-052 | LG 398 |
| 917170698 | 95-614* | LG 375 |
| 917173920 | 195-062 | LG 376 |
| 917173920 | 596-615* | LG 529 |
| 917173920 | 96-615* | LG 461 |
| 917175064 | 95-057 | LG 380 |
| 917175064PB | 95-057 | LG 380 |
| 917176135 | 95-057 | LG 380 |
| 917180767 | 72-014 | LG 1031 |
| 917187254 | 195-072 | LG 530 |
| 917187254 | 595-605* | LG 422 |
| 917187254 | 95-605* | LG 463 |
| 917192682 | 595-602* | LG 403 |
| 917192682 | 95-073 | LG 533 |
| 917192682 | 95-602* | LG 403 |
| 917192682X431 | 595-602* | LG 403 |
| 917192682X431 | 95-073 | LG 533 |
| 917192682X431 | 95-602* | LG 403 |
| 917197257 | 60-526 | LG 702 |
| 91724676 | 195-005 | LG 373 |
| 91724691 | 95-015 | LG 400 |
| 91730652MS | 595-614* | LG 459 |
| 91730652MS | 95-045 | LG 374 |
| 91730652MS | 95-614* | LG 375 |
| 91733219 | 595-602* | LG 403 |
| 91733219 | 95-023 | LG 380 |
| 91733219 | 95-602* | LG 403 |
| 91733256 | 195-021 | LG 468 |
| 91733256 | 595-602* | LG 403 |
| 91733256 | 95-602* | LG 403 |
| 91733269 | 195-021 | LG 468 |
| 91733269 | 595-602* | LG 403 |
| 91733269 | 95-602* | LG 403 |
| 917408714 | 60-526 | LG 702 |
| 917532121263 | 95-031 | LG 377 |
| 917532121798 | 95-027 | LG 398 |
| 917532127841 | 595-613* | LG 463 |
| 917532127841 | 95-036 | LG 463 |
| 917532127841 | 95-613* | LG 463 |
| 917532129277 | 595-024* | LG 465 |
| 917532129277 | 95-051 | LG 465 |
| 917532130652 | 95-006 | LG 397 |
| 917532130861 | 46-325 | LG 701 |
| 917532134148 | 195-003 | LG 400 |
| 917532134148 | 595-601* | LG 400 |
| 917532134148 | 95-601* | LG 423 |
| 917532134768 | 195-021 | LG 468 |
| 917532134768 | 595-602* | LG 403 |
| 917532134768 | 95-602* | LG 403 |
| 917532137380 | 595-609* | LG 461 |
| 917532137380 | 95-018 | LG 399 |
| 917532137380 | 95-609* | LG 376 |
| 917532138496 | 595-613* | LG 463 |
| 917532138496 | 95-036 | LG 463 |
| 917532138496 | 95-613* | LG 463 |
| 917532138497 | 195-033 | LG 400 |
| 917532138497 | 595-601* | LG 400 |
| 917532138497 | 95-601* | LG 423 |
| 917532138498 | 195-032 | LG 425 |
| 917532138498 | 596-900* | LG 380 |
| 917532138498 | 96-900* | LG 526 |
| 917532138970 | 195-033 | LG 400 |
| 917532138970 | 595-601* | LG 400 |
| 917532138970 | 95-601* | LG 423 |
| 917532139774 | 195-003 | LG 400 |
| 917532139774 | 595-601* | LG 400 |
| 917532139774 | 95-601* | LG 423 |
| 917532139775 | 195-019 | LG 466 |
| 917532141114 | 195-021 | LG 468 |
| 917532141114 | 595-602* | LG 403 |
| 917532141114 | 95-602* | LG 403 |
| 917532144767 | 595-614* | LG 459 |
| 917532144767 | 95-052 | LG 398 |
| 917532144767 | 95-614* | LG 375 |
| 917532145708 | 595-614* | LG 459 |
| 917532145708 | 95-045 | LG 374 |
| 917532145708 | 95-614* | LG 375 |
| 917532152443 | 595-614* | LG 459 |
| 917532152443 | 95-045 | LG 374 |
| 917532152443 | 95-614* | LG 375 |
| 917532157353 | 595-614* | LG 459 |
| 917532157353 | 95-052 | LG 398 |
| 917532157353 | 95-614* | LG 375 |
| 917532159267 | 95-071 | LG 402 |
| 917532162778 | 60-107 | LG 703 |
| 917532165746 | 72-312 | LG 1038 |
| 917532165833 | 95-057 | LG 380 |
| 917532169676 | 60-525 | LG 702 |
| 917532170698 | 595-614* | LG 459 |
| 917532170698 | 95-052 | LG 398 |
| 917532170698 | 95-614* | LG 375 |
| 917532173920 | 195-062 | LG 376 |
| 917532173920 | 596-615* | LG 529 |
| 917532173920 | 96-615* | LG 461 |

X

# 2019 OEM X-Reference

| OEM No. | OREGON | Page |
|---|---|---|
| **HUSQVARNA** | | |
| 917532173921 | 95-068 | LG 376 |
| 917532175064 | 95-057 | LG 380 |
| 917532176084 | 595-614* | LG 459 |
| 917532176084 | 95-052 | LG 398 |
| 917532176084 | 95-614* | LG 375 |
| 917532176135 | 95-057 | LG 380 |
| 917532176556 | 60-107 | LG 703 |
| 917532180054 | 195-062 | LG 376 |
| 917532180054 | 596-615* | LG 529 |
| 917532180054 | 96-615* | LG 461 |
| 917532180459 | 595-622* | LG 468 |
| 917532180459 | 95-057 | LG 380 |
| 917532180767 | 72-014 | LG 1031 |
| 917532182158 | 60-000 | LG 702 |
| 917532183281 | 60-110 | LG 703 |
| 917532183567 | 60-109 | LG 703 |
| 917532184588 | 60-103 | LG 702 |
| 917532187254 | 195-072 | LG 530 |
| 917532187254 | 595-605* | LG 422 |
| 917532187254 | 95-605* | LG 463 |
| 917532187255 | 595-605* | LG 422 |
| 917532187255 | 95-082 | LG 372 |
| 917532187255 | 95-605* | LG 463 |
| 917532187256 | 195-072 | LG 530 |
| 917532187256 | 595-605* | LG 422 |
| 917532187256 | 95-605* | LG 463 |
| 917532189182 | 60-104 | LG 702 |
| 917532192682 | 595-602* | LG 403 |
| 917532192682 | 95-073 | LG 533 |
| 917532192682 | 95-602* | LG 403 |
| 917532193144 | 72-003 | LG 1031 |
| 917532193144 | 72-077 | LG 1031 |
| 917532193144 | 72-458 | LG 1031 |
| 917532193957 | 195-003 | LG 400 |
| 917532193957 | 595-601* | LG 400 |
| 917532193957 | 95-024 | LG 465 |
| 917532193957 | 95-601* | LG 423 |
| 917532197257 | 60-526 | LG 702 |
| 9175322752233 | 95-044 | LG 465 |
| 917532403107 | 596-370* | LG 427 |
| 917532403107 | 95-074 | LG 533 |
| 917532403107 | 96-370* | LG 533 |
| 917532405380 | 195-070 | LG 469 |
| 917532405380 | 596-370* | LG 427 |
| 917532405380 | 96-370* | LG 533 |
| 917532406707 | 595-602* | LG 403 |
| 917532406707 | 95-073 | LG 533 |
| 917532406707 | 95-602* | LG 403 |
| 917532406713 | 595-602* | LG 403 |
| 917532406713 | 95-023 | LG 380 |
| 917532406713 | 95-602* | LG 403 |
| 917532407816 | 60-102 | LG 702 |
| 917532408714 | 60-526 | LG 702 |
| 917532419273 | 595-807* | LG 382 |
| 917532420463 | 95-076 | LG 404 |
| 917532420463 | 95-615* | LG 426 |
| 917532421825 | 95-076 | LG 404 |
| 917532421825 | 95-615* | LG 426 |
| 917532422719 | 195-005 | LG 373 |
| 917532428460 | 60-101 | LG 702 |
| 917532435111 | 60-526 | LG 702 |
| 917532440855 | 60-101 | LG 702 |
| 917532700953 | 72-077 | LG 1031 |
| 917532751646 | 595-024* | LG 465 |
| 917532751646 | 95-051 | LG 465 |
| 917532752233 | 595-024* | LG 465 |
| 917532752233 | 95-044 | LG 465 |
| 917532752234 | 195-021 | LG 468 |
| 917532752234 | 595-602* | LG 403 |
| 917532752234 | 95-602* | LG 403 |
| 917532850972 | 595-024* | LG 465 |
| 917532850972 | 95-024 | LG 465 |
| 917532850972MS | 595-024* | LG 465 |
| 917532850972MS | 95-024 | LG 465 |
| 917532850973 | 595-602* | LG 403 |
| 917532850973 | 95-023 | LG 380 |
| 917532850973 | 95-602* | LG 403 |
| 917532851462 | 60-000 | LG 702 |
| 917539107519 | 195-062 | LG 376 |
| 917539107519 | 596-615* | LG 529 |
| 917539107519 | 96-615* | LG 461 |
| 917539110460 | 195-005 | LG 373 |
| 917539110832 | 15-473 | LG 288 |
| 917539112053 | 195-072 | LG 530 |
| 917539112053 | 595-605* | LG 422 |
| 917539112053 | 95-605* | LG 463 |
| 91756400 | 595-024* | LG 465 |
| 91756400 | 95-024 | LG 465 |
| 91756401 | 595-602* | LG 403 |
| 91756401 | 95-023 | LG 380 |
| 91756401 | 95-602* | LG 403 |
| 917577203106 | 195-062 | LG 376 |
| 917577203106 | 596-615* | LG 529 |
| 917577203106 | 96-615* | LG 461 |
| 917700953 | 72-077 | LG 1031 |
| 917700972 | 595-024* | LG 465 |
| 917700972 | 95-051 | LG 465 |
| 917700973 | 195-021 | LG 468 |
| 917700973 | 595-602* | LG 403 |
| 917700973 | 95-602* | LG 403 |
| 917701211MS | 595-024* | LG 465 |
| 917701211MS | 95-024 | LG 465 |
| 917701211X417 | 595-024* | LG 465 |
| 917701211X417 | 95-024 | LG 465 |
| 917701213 | 595-602* | LG 403 |
| 917701213 | 95-023 | LG 380 |
| 917701213 | 95-602* | LG 403 |
| 917701213MS | 595-602* | LG 403 |
| 917701213MS | 95-023 | LG 380 |
| 917701213MS | 95-602* | LG 403 |
| 917733203 | 595-024* | LG 465 |
| 917733203 | 95-024 | LG 465 |
| 917751646 | 595-024* | LG 465 |
| 917751646 | 95-051 | LG 465 |
| 917752234 | 195-021 | LG 468 |
| 917752234 | 595-602* | LG 403 |
| 917752234 | 595-621* | LG 467 |
| 917752234 | 595-621* | LG 467 |
| 917752234 | 95-057 | LG 380 |
| 917752234 | 95-057 | LG 380 |
| 917752234 | 95-602* | LG 403 |
| 917752234 | 95-621* | LG 402 |
| 917752234 | 95-621* | LG 402 |
| 91777419274 | 595-807* | LG 382 |
| 917777134149 | 195-005 | LG 373 |
| 917777187256 | 195-072 | LG 530 |
| 917777187256 | 595-605* | LG 422 |
| 917777187256 | 95-605* | LG 463 |
| 917777405380 | 195-070 | LG 469 |
| 917777405380 | 596-370* | LG 427 |
| 917777405380 | 96-370* | LG 533 |
| 917850972 | 595-024* | LG 465 |
| 917850972 | 95-024 | LG 465 |
| 917850973 | 595-602* | LG 403 |
| 917850973 | 95-023 | LG 380 |
| 917850973 | 95-602* | LG 403 |
| 917850973MS | 595-602* | LG 403 |
| 917850973MS | 95-023 | LG 380 |
| 917850973MS | 95-602* | LG 403 |
| 917851462 | 60-000 | LG 702 |
| 918152443 | 595-614* | LG 459 |
| 918152443 | 95-045 | LG 374 |
| 918152443 | 95-614* | LG 375 |
| 94114601 | 33-254 | LG 785 |
| 954633774 | 195-062 | LG 376 |
| 954633774 | 596-615* | LG 529 |
| 954633774 | 96-615* | LG 461 |
| 954636867 | 195-005 | LG 373 |
| 9585472 | 72-001 | LG 1031 |
| 9585472 | 72-077 | LG 1031 |
| PP22055 | 95-024 | LG 465 |
| PP22055 | 95-051 | LG 465 |
| **HUSTLER** | | |
| 031997 | 72-308-1 | LG 1042 |
| 26237 | 33-317-0 | LG 729 |
| 30817 | 33-337 | LG 730 |
| 30866 | 91-178 | LG 471 |
| 31997 | 72-308-1 | LG 1042 |
| 350595 | 82-021 | LG 884 |
| 396-735 | 91-178 | LG 471 |
| 600900 | 92-039 | LG 470 |
| 600900X | 92-039 | LG 470 |
| 600900Y | 92-039 | LG 470 |
| 600901 | 396-740* | LG 415 |
| 600901 | 596-319* | LG 415 |
| 600901 | 92-038 | LG 392 |
| 600901 | 96-319* | LG 415 |
| 600922 | 27-504 | LG 725 |
| 601012 | 392-208* | LG 472 |
| 601012 | 596-808* | LG 472 |
| 601012 | 92-208 | LG 472 |
| 601012X | 392-208* | LG 472 |
| 601012X | 596-808* | LG 472 |
| 601012X | 92-208 | LG 472 |
| 601013 | 392-208* | LG 472 |
| 601013 | 596-808* | LG 472 |
| 601013 | 92-208 | LG 472 |
| 601013X | 392-208* | LG 472 |
| 601013X | 596-808* | LG 472 |
| 601013X | 92-208 | LG 472 |
| 601014 | 396-735* | LG 452 |
| 601014 | 596-308* | LG 548 |
| 601014 | 92-207 | LG 456 |
| 601014 | 96-308* | LG 456 |
| 601014X | 396-735* | LG 452 |
| 601014X | 596-308* | LG 548 |
| 601014X | 92-207 | LG 456 |
| 601014X | 96-308* | LG 456 |
| 601123 | 396-735* | LG 452 |
| 601123 | 596-308* | LG 548 |
| 601123 | 92-207 | LG 456 |
| 601123 | 96-308* | LG 456 |
| 601123X | 396-735* | LG 452 |
| 601123X | 596-308* | LG 548 |
| 601123X | 92-207 | LG 456 |
| 601123X | 96-308* | LG 456 |
| 601123Y | 396-735* | LG 452 |
| 601123Y | 596-308* | LG 548 |
| 601123Y | 92-207 | LG 456 |
| 601123Y | 96-308* | LG 456 |
| 601124 | 392-208* | LG 472 |
| 601124 | 596-808* | LG 472 |
| 601124 | 92-208 | LG 472 |
| 601124X | 392-208* | LG 472 |
| 601124X | 596-808* | LG 472 |
| 601124X | 92-208 | LG 472 |
| 601124Y | 392-208* | LG 472 |
| 601124Y | 596-808* | LG 472 |
| 601124Y | 92-208 | LG 472 |
| 601311 | 33-155 | LG 738 |
| 601929 | 96-215* | LG 475 |
| 601929X | 96-215* | LG 475 |
| 602284 | 396-739* | LG 479 |
| 602284 | 96-801* | LG 479 |
| 602284X | 396-739* | LG 479 |
| 602284X | 96-801* | LG 479 |
| 602288 | 396-739* | LG 479 |
| 602288 | 96-801* | LG 479 |
| 602414 | 596-601* | LG 474 |
| 602414Y | 596-601* | LG 474 |
| 602415 | 596-601* | LG 474 |
| 602415Y | 596-601* | LG 474 |
| 602416 | 392-208* | LG 472 |
| 602416 | 596-808* | LG 472 |
| 602416X | 392-208* | LG 472 |
| 602416X | 596-808* | LG 472 |
| 602416Y | 392-208* | LG 472 |
| 602416Y | 596-808* | LG 472 |
| 602439 | 396-727* | LG 467 |
| 602439 | 596-347* | LG 448 |
| 602439 | 91-308 | LG 467 |
| 602439 | 96-347* | LG 387 |
| 602439X | 396-727* | LG 467 |
| 602439X | 596-347* | LG 448 |
| 602439X | 91-308 | LG 467 |
| 602439X | 96-347* | LG 387 |
| 602439Y | 396-727* | LG 467 |
| 602439Y | 596-347* | LG 448 |
| 602439Y | 91-308 | LG 467 |
| 602439Y | 96-347* | LG 387 |
| 602698 | 396-739* | LG 479 |
| 602698 | 91-217 | LG 558 |
| 602698 | 96-801* | LG 479 |
| 602698X | 396-739* | LG 479 |
| 602698X | 91-217 | LG 558 |
| 602698X | 96-801* | LG 479 |
| 602771 | 396-740* | LG 415 |
| 602771 | 596-319* | LG 415 |
| 602771 | 96-319* | LG 415 |
| 602771X | 396-740* | LG 415 |
| 602771X | 596-319* | LG 415 |
| 602771X | 96-319* | LG 415 |
| 602857 | 396-764* | LG 537 |
| 602857 | 596-341* | LG 482 |
| 602857 | 96-341* | LG 446 |
| 602857X | 396-764* | LG 537 |
| 602857X | 596-341* | LG 482 |
| 602857X | 96-341* | LG 446 |
| 602864 | 596-601* | LG 474 |
| 602864X | 596-601* | LG 474 |
| 603848 | 396-704* | LG 414 |
| 603848 | 596-704* | LG 471 |
| 603848 | 96-318* | LG 414 |
| 603848X | 396-704* | LG 414 |
| 603848X | 596-704* | LG 471 |
| 603848X | 96-318* | LG 414 |
| 603848Y | 396-704* | LG 414 |
| 603848Y | 596-704* | LG 471 |
| 603848Y | 96-318* | LG 414 |
| 603992 | 396-740* | LG 415 |
| 603992 | 596-319* | LG 415 |
| 603992 | 92-213 | LG 473 |
| 603992 | 96-319* | LG 415 |
| 603992X | 396-740* | LG 415 |
| 603992X | 596-319* | LG 415 |
| 603992X | 92-213 | LG 473 |
| 603992X | 96-319* | LG 415 |
| 603995 | 396-704* | LG 414 |
| 603995 | 596-704* | LG 471 |
| 603995 | 92-211 | LG 471 |
| 603995 | 96-318* | LG 414 |
| 603995X | 396-704* | LG 414 |
| 603995X | 596-704* | LG 471 |
| 603995X | 92-211 | LG 471 |
| 603995X | 96-318* | LG 414 |
| 604164 | 96-215* | LG 475 |
| 604164X | 96-215* | LG 475 |
| 781039 | 33-188 | LG 738 |
| 781310 | 75-662 | LG 258 |
| 781385 | 78-023 | LG 822 |
| 781443 | 75-663 | LG 279 |
| 781856 | 78-022 | LG 827 |
| 781898 | 90-206 | LG 414 |
| 781898 | 90-207 | LG 472 |
| 781898 | 92-044 | LG 471 |
| 782292 | 75-664 | LG 279 |
| 782516 | 396-703* | LG 502 |
| 782516 | 90-208 | LG 502 |





* OREGON® Gator™ replacement blade

## HUSTLER

| OEM No. | OREGON | Page |
|---|---|---|
| 782516X | 396-703* | LG 502 |
| 782516X | 90-208 | LG 502 |
| 782532 | 396-704* | LG 414 |
| 782532 | 596-704* | LG 471 |
| 782532 | 90-207 | LG 472 |
| 782532 | 96-318* | LG 414 |
| 783555 | 45-220 | LG 232 |
| 783753 | 396-704* | LG 414 |
| 783753 | 596-704* | LG 471 |
| 783753 | 90-206 | LG 414 |
| 783753 | 90-207 | LG 472 |
| 783753 | 96-318* | LG 414 |
| 783753X | 396-704* | LG 414 |
| 783753X | 596-704* | LG 471 |
| 783753X | 90-206 | LG 414 |
| 783753X | 96-318* | LG 414 |
| 783753Y | 396-704* | LG 414 |
| 783753Y | 596-704* | LG 471 |
| 783753Y | 90-206 | LG 414 |
| 783753Y | 96-318* | LG 414 |
| 783936 | 83-011 | LG 819 |
| 784207 | 75-665 | LG 279 |
| 784223 | 45-225 | LG 232 |
| 784249 | 15-017 | LG 279 |
| 784256 | 90-205 | LG 501 |
| 784256 | 96-302* | LG 470 |
| 784256X | 90-205 | LG 501 |
| 784256X | 96-302* | LG 470 |
| 784322 | 15-018 | LG 279 |
| 784504 | 78-026 | LG 822 |
| 785030 | 60-053 | LG 708 |
| 785436 | 396-704* | LG 414 |
| 785436 | 596-704* | LG 471 |
| 785436 | 90-207 | LG 472 |
| 785436 | 96-318* | LG 414 |
| 785436X | 396-704* | LG 414 |
| 785436X | 596-704* | LG 471 |
| 785436X | 96-318* | LG 414 |
| 785436Y | 396-704* | LG 414 |
| 785436Y | 596-704* | LG 471 |
| 785436Y | 96-318* | LG 414 |
| 785600 | 30-436 | LG 194 |
| 785728 | 96-302* | LG 470 |
| 785728X | 96-302* | LG 470 |
| 786657 | 60-054 | LG 708 |
| 787226 | 30-437 | LG 192 |
| 787366 | 33-155 | LG 738 |
| 787721 | 396-704* | LG 414 |
| 787721 | 596-704* | LG 471 |
| 787721 | 92-044 | LG 471 |
| 787721 | 96-318* | LG 414 |
| 787721X | 396-704* | LG 414 |
| 787721X | 596-704* | LG 471 |
| 787721X | 92-044 | LG 471 |
| 787721X | 96-318* | LG 414 |
| 787721Y | 396-704* | LG 414 |
| 787721Y | 596-704* | LG 471 |
| 787721Y | 92-044 | LG 471 |
| 787721Y | 96-318* | LG 414 |
| 787739 | 96-302* | LG 470 |
| 789388 | 75-755 | LG 258 |
| 791335 | 75-756 | LG 279 |
| 793380 | 396-727* | LG 467 |
| 793380 | 596-347* | LG 448 |
| 793380 | 91-596 | LG 446 |
| 793380 | 96-347* | LG 387 |
| 793380X | 396-727* | LG 467 |
| 793380X | 596-347* | LG 448 |
| 793380X | 91-596 | LG 446 |
| 793380X | 96-347* | LG 387 |
| 793380Y | 396-727* | LG 467 |
| 793380Y | 596-347* | LG 448 |
| 793380Y | 91-596 | LG 446 |
| 793380Y | 96-347* | LG 387 |
| 793398 | 96-216* | LG 475 |
| 793398X | 96-216* | LG 475 |
| 793398Y | 96-216* | LG 475 |
| 793794 | 396-740* | LG 415 |
| 793794 | 596-319* | LG 415 |
| 793794 | 92-038 | LG 392 |
| 793794 | 96-319* | LG 415 |
| 793794X | 396-740* | LG 415 |
| 793794X | 596-319* | LG 415 |
| 793794X | 92-038 | LG 392 |
| 793794X | 96-319* | LG 415 |
| 793794Y | 396-740* | LG 415 |
| 793794Y | 596-319* | LG 415 |
| 793794Y | 92-038 | LG 392 |
| 793794Y | 96-319* | LG 415 |
| 793828 | 75-757 | LG 256 |
| 793893 | 75-759 | LG 279 |
| 793935 | 396-740* | LG 415 |
| 793935 | 596-319* | LG 415 |
| 793935 | 96-319* | LG 415 |
| 793935X | 396-740* | LG 415 |
| 793935X | 596-319* | LG 415 |
| 793935X | 96-319* | LG 415 |
| 794198 | 396-704* | LG 414 |
| 794198 | 596-704* | LG 471 |
| 794198 | 92-212 | LG 471 |
| 794198 | 96-318* | LG 414 |
| 794198X | 396-704* | LG 414 |
| 794198X | 596-704* | LG 471 |
| 794198X | 92-212 | LG 471 |
| 794198X | 96-318* | LG 414 |
| 794198Y | 396-704* | LG 414 |
| 794198Y | 596-704* | LG 471 |
| 794198Y | 92-212 | LG 471 |
| 794198Y | 96-318* | LG 414 |
| 794214 | 396-740* | LG 415 |
| 794214 | 596-319* | LG 415 |
| 794214 | 91-311 | LG 439 |
| 794214 | 96-319* | LG 415 |
| 794214X | 396-740* | LG 415 |
| 794214X | 596-319* | LG 415 |
| 794214X | 91-311 | LG 439 |
| 794214X | 96-319* | LG 415 |
| 794230 | 396-740* | LG 415 |
| 794230 | 596-319* | LG 415 |
| 794230 | 96-319* | LG 415 |
| 794230X | 396-740* | LG 415 |
| 794230X | 596-319* | LG 415 |
| 794230X | 96-319* | LG 415 |
| 794230Y | 396-740* | LG 415 |
| 794230Y | 596-319* | LG 415 |
| 794230Y | 96-319* | LG 415 |
| 794685 | 396-740* | LG 415 |
| 794685 | 596-319* | LG 415 |
| 794685 | 92-037 | LG 423 |
| 794685 | 96-319* | LG 415 |
| 794685X | 396-740* | LG 415 |
| 794685X | 596-319* | LG 415 |
| 794685X | 92-037 | LG 423 |
| 794685X | 96-319* | LG 415 |
| 794693 | 96-302* | LG 470 |
| 794693X | 96-302* | LG 470 |
| 794859 | 396-727* | LG 467 |
| 794859 | 596-347* | LG 448 |
| 794859 | 96-347* | LG 387 |
| 794859X | 396-727* | LG 467 |
| 794859X | 596-347* | LG 448 |
| 794859X | 96-347* | LG 387 |
| 794859Y | 396-727* | LG 467 |
| 794859Y | 596-347* | LG 448 |
| 794859Y | 96-347* | LG 387 |
| 794867 | 96-216* | LG 475 |
| 794867X | 96-216* | LG 475 |
| 794867Y | 96-216* | LG 475 |
| 795252 | 396-727* | LG 467 |
| 795252 | 596-347* | LG 448 |
| 795252 | 91-308 | LG 467 |
| 795252 | 96-347* | LG 387 |
| 795252X | 396-727* | LG 467 |
| 795252X | 596-347* | LG 448 |
| 795252X | 91-308 | LG 467 |
| 795252X | 96-347* | LG 387 |
| 795252Y | 396-727* | LG 467 |
| 795252Y | 596-347* | LG 448 |
| 795252Y | 91-308 | LG 467 |
| 795252Y | 96-347* | LG 387 |
| 795260 | 92-739 | LG 474 |
| 795260 | 96-216* | LG 475 |
| 795260X | 92-739 | LG 474 |
| 795260X | 96-216* | LG 475 |
| 795260Y | 92-739 | LG 474 |
| 795260Y | 96-216* | LG 475 |
| 795526 | 396-704* | LG 414 |
| 795526 | 596-704* | LG 471 |
| 795526 | 90-207 | LG 472 |
| 795526 | 92-044 | LG 471 |
| 795526 | 96-318* | LG 414 |
| 795526X | 396-704* | LG 414 |
| 795526X | 596-704* | LG 471 |
| 795526X | 92-044 | LG 471 |
| 795526X | 96-318* | LG 414 |
| 795526Y | 396-704* | LG 414 |
| 795526Y | 596-704* | LG 471 |
| 795526Y | 92-044 | LG 471 |
| 795526Y | 96-318* | LG 414 |
| 795757 | 396-735* | LG 452 |
| 795757 | 596-308* | LG 548 |
| 795757 | 92-737 | LG 418 |
| 795757 | 96-308* | LG 456 |
| 795757X | 396-735* | LG 452 |
| 795757X | 596-308* | LG 548 |
| 795757X | 92-737 | LG 418 |
| 795757X | 96-308* | LG 456 |
| 795757Y | 396-735* | LG 452 |
| 795757Y | 596-308* | LG 548 |
| 795757Y | 92-737 | LG 418 |
| 795757Y | 96-308* | LG 456 |
| 796300 | 96-302* | LG 470 |
| 796300X | 96-302* | LG 470 |
| 796508 | 96-215* | LG 475 |
| 796508X | 96-215* | LG 475 |
| 796623 | 396-735* | LG 452 |
| 796623 | 596-308* | LG 548 |
| 796623 | 92-743 | LG 418 |
| 796623 | 96-308* | LG 456 |
| 796623X | 396-735* | LG 452 |
| 796623X | 596-308* | LG 548 |
| 796623X | 92-743 | LG 418 |
| 796623X | 96-308* | LG 456 |
| 796623Y | 396-735* | LG 452 |
| 796623Y | 596-308* | LG 548 |
| 796623Y | 92-743 | LG 418 |
| 796623Y | 96-308* | LG 456 |
| 796631 | 396-735* | LG 452 |
| 796631 | 596-308* | LG 548 |
| 796631 | 92-207 | LG 456 |
| 796631 | 96-308* | LG 456 |
| 796631X | 396-735* | LG 452 |
| 796631X | 596-308* | LG 548 |
| 796631X | 92-207 | LG 456 |
| 796631X | 96-308* | LG 456 |
| 796631Y | 396-735* | LG 452 |
| 796631Y | 596-308* | LG 548 |
| 796631Y | 92-207 | LG 456 |
| 796631Y | 96-308* | LG 456 |
| 796649 | 396-735* | LG 452 |
| 796649 | 596-308* | LG 548 |
| 796649 | 96-308* | LG 456 |
| 796649X | 396-735* | LG 452 |
| 796649X | 596-308* | LG 548 |
| 796649X | 96-308* | LG 456 |
| 796649Y | 396-735* | LG 452 |
| 796649Y | 596-308* | LG 548 |
| 796649Y | 96-308* | LG 456 |
| 796839 | 96-216* | LG 475 |
| 796839X | 96-216* | LG 475 |
| 796839Y | 96-216* | LG 475 |
| 797696 | 392-208* | LG 472 |
| 797696 | 596-808* | LG 472 |
| 797696 | 92-042 | LG 472 |
| 797696X | 392-208* | LG 472 |
| 797696X | 596-808* | LG 472 |
| 797696X | 92-042 | LG 472 |
| 797696Y | 392-208* | LG 472 |
| 797696Y | 596-808* | LG 472 |
| 797696Y | 92-042 | LG 472 |
| 797704 | 392-208* | LG 472 |
| 797704 | 596-808* | LG 472 |
| 797704 | 92-738 | LG 472 |
| 797704X | 392-208* | LG 472 |
| 797704X | 596-808* | LG 472 |
| 797704X | 92-738 | LG 472 |
| 797704Y | 392-208* | LG 472 |
| 797704Y | 596-808* | LG 472 |
| 797704Y | 92-738 | LG 472 |
| 797712 | 392-208* | LG 472 |
| 797712 | 596-808* | LG 472 |
| 797712X | 392-208* | LG 472 |
| 797712X | 596-808* | LG 472 |
| 797712Y | 392-208* | LG 472 |
| 797712Y | 596-808* | LG 472 |
| 797720 | 15-019 | LG 279 |
| 798496 | 596-601* | LG 474 |
| 798496 | 92-045 | LG 474 |
| 798496X | 596-601* | LG 474 |
| 798496X | 92-045 | LG 474 |
| 798504 | 596-601* | LG 474 |
| 798504X | 596-601* | LG 474 |
| 798504Y | 596-601* | LG 474 |
| 798512 | 596-601* | LG 474 |
| 798512X | 596-601* | LG 474 |
| 798512Y | 596-601* | LG 474 |
| 798702 | 396-764* | LG 537 |
| 798702 | 596-341* | LG 482 |
| 798702 | 96-341* | LG 446 |
| 798702X | 396-764* | LG 537 |
| 798702X | 596-341* | LG 482 |
| 798702X | 96-341* | LG 446 |
| 798710 | 396-764* | LG 537 |
| 798710 | 596-341* | LG 482 |
| 798710 | 96-341* | LG 446 |
| 798710X | 396-764* | LG 537 |
| 798710X | 596-341* | LG 482 |
| 798710X | 96-341* | LG 446 |
| 798728 | 396-764* | LG 537 |
| 798728 | 596-341* | LG 482 |
| 798728 | 96-341* | LG 446 |
| 798728X | 396-764* | LG 537 |
| 798728X | 596-341* | LG 482 |
| 798728X | 96-341* | LG 446 |

## HYDRO-GEAR

| | | |
|---|---|---|
| BDP-10A-201 | 27-001 | |
| BDP-10A-207 | 27-001 | |
| BDP-10A-208 | 27-001 | |
| BDP-10A-293 | 27-001 | |
| BDP-10L-112 | 27-001 | |
| BDP-10L-126 | 27-001 | |
| BDP-10L-131 | 27-001 | |
| BDP-10L-134 | 27-001 | |
| HGM-15E-3138 | 27-504 | LG 725 |
| PG-DACC-DY1X-XXXX | | 27-001 |

X

* OREGON® Gator™ replacement blade

# 2019 OEM X-Reference

| OEM No. | OREGON | Page |
|---|---|---|
| **I.D.B.A.** | | |
| 754-0145 | 75-145 | LG 300 |
| 754-0194 | 75-090 | LG 301 |
| 754-0201 | 75-441 | LG 334 |
| 754-0234 | 75-441 | LG 334 |
| 754-0240 | 75-009 | LG 301 |
| 754-0241 | 75-012 | LG 301 |
| 754-0266 | 75-016 | LG 301 |
| 754-0293 | 75-018 | LG 301 |
| 954-0145 | 75-145 | LG 300 |
| 954-0145A | 75-145 | LG 300 |
| 954-015A | 75-145 | LG 300 |
| 954-0194 | 75-090 | LG 301 |
| 954-0201 | 75-441 | LG 334 |
| 954-0234 | 75-441 | LG 334 |
| 954-0240 | 75-009 | LG 301 |
| 954-0241 | 75-012 | LG 301 |
| 954-0241A | 75-012 | LG 301 |
| 954-0266 | 75-016 | LG 301 |
| 954-0266A | 75-016 | LG 301 |
| 954-0293 | 75-018 | LG 301 |
| **IDEAL MOWER SALES, IN** | | |
| 754-0145 | 75-145 | LG 300 |
| 754-0935 | 75-092 | LG 304 |
| 954-0145 | 75-145 | LG 300 |
| 954-0145A | 75-145 | LG 300 |
| 954-015A | 75-145 | LG 300 |
| 954-0935 | 75-092 | LG 304 |
| **INGERSOLL** | | |
| C12102 | 45-114 | LG 938 |
| C29735 | 45-207 | LG 236 |
| C31572 | 91-117 | LG 475 |
| C33445 | 83-010 | LG 819 |
| C33445 | 83-400 | LG 819 |
| C37891 | 78-044-1 | LG 834 |
| G900-2518 | 78-044-1 | LG 834 |
| **INTERNATIONAL HARVESTER** | | |
| 491395-R1 | 34-025 | LG 821 |
| 542520R-91 | 34-025 | LG 821 |
| **JACOBSEN** | | |
| 03239 | 91-180 | LG 460 |
| 107927 | 33-320-0 | LG 731 |
| 112111-01 | 593-600* | LG 385 |
| 112111-01 | 93-009 | LG 476 |
| 112111-02 | 593-601* | LG 386 |
| 112111-02 | 93-010 | LG 432 |
| 112111-02 | 93-601* | LG 432 |
| 112111-03 | 396-702* | LG 480 |
| 112111-03 | 596-702* | LG 388 |
| 112111-03 | 93-011 | LG 557 |
| 112111-03 | 96-702* | LG 491 |
| 112111-04 | 93-025 | LG 482 |
| 112243-03 | 396-702* | LG 480 |
| 112243-03 | 596-702* | LG 388 |
| 112243-03 | 93-013 | LG 480 |
| 112243-03 | 96-702* | LG 491 |
| 122294 | 45-207 | LG 236 |
| 129846 | 33-393 | LG 943 |
| 131201 | 45-207 | LG 236 |
| 158458 | 76-067-0 | LG 726 |
| 16C132 | 80-741 | LG 852 |
| 182186 | 78-673 | LG 839 |
| 182187 | 48-148 | LG 695 |
| 182196 | 78-680 | LG 840 |
| 182235 | 80-036 | LG 727 |
| 182237 | 78-642 | LG 841 |
| 182246 | 82-305 | LG 908 |
| 182248 | 04-125 | LG 694 |
| 182519 | 78-300 | LG 833 |
| 21-350759 | 45-207 | LG 236 |
| 255 547 | 33-128-1 | LG 741 |
| 2810030 | 392-013* | LG 480 |
| 3007759 | 392-013* | LG 480 |
| 3007759 | 92-013 | LG 480 |
| 302009 | 45-205 | LG 228 |
| 302010 | 45-205 | LG 228 |
| 302227-50X | 396-723* | LG 413 |
| 302227-50X | 596-323* | LG 453 |
| 302227-50X | 91-502 | LG 477 |
| 302227-50X | 96-323* | LG 477 |
| 30227-60X | 396-740* | LG 415 |
| 30227-60X | 596-319* | LG 415 |
| 30227-60X | 90-109 | LG 414 |
| 30227-60X | 91-253 | LG 415 |
| 30227-60X | 91-264 | LG 473 |
| 30227-60X | 91-311 | LG 439 |
| 30227-60X | 91-378 | LG 414 |
| 30227-60X | 91-503 | LG 424 |
| 30227-60X | 91-506 | LG 473 |
| 30227-60X | 91-509 | LG 424 |
| 30227-60X | 91-527 | LG 479 |
| 30227-60X | 92-037 | LG 423 |
| 30227-60X | 92-038 | LG 392 |
| 30227-60X | 94-055 | LG 480 |
| 30227-60X | 96-319* | LG 415 |
| 309444 | 40-807 | LG 585 |
| 310089 | 45-104 | LG 939 |
| 310427 | 45-207 | LG 236 |
| 310427 | 45-227 | LG 234 |
| 311959 | 45-205 | LG 228 |
| 311960 | 45-205 | LG 228 |
| 312321 | 80-014 | LG 727 |
| 317726 | 34-023 | LG 822 |
| 32061 | 91-180 | LG 460 |
| 320774 | 80-036 | LG 727 |
| 321292 | 80-036 | LG 727 |
| 3239 | 91-180 | LG 460 |
| 325267 | 34-031 | LG 821 |
| 326217 | 75-208 | LG 277 |
| 330721 | 91-342 | LG 447 |
| 330721CJ | 91-342 | LG 447 |
| 342449 | 80-741 | LG 852 |
| 343060 | 42-008 | LG 945 |
| 345050 | 45-207 | LG 236 |
| 345050 | 45-227 | LG 234 |
| 350759 | 45-207 | LG 236 |
| 350759 | 45-227 | LG 234 |
| 363055 | 396-726* | LG 391 |
| 363055 | 596-344* | LG 495 |
| 363055 | 91-181 | LG 495 |
| 363055 | 96-344* | LG 536 |
| 363137 | 78-673 | LG 839 |
| 363264 | 78-300 | LG 833 |
| 375882 | 45-295 | LG 232 |
| 388089 | 45-205 | LG 228 |
| 390515 | 91-352 | LG 482 |
| 390665 | 396-726* | LG 391 |
| 390665 | 596-344* | LG 495 |
| 390665 | 96-344* | LG 536 |
| 390666 | 396-716* | LG 451 |
| 390666 | 596-310* | LG 447 |
| 390666 | 91-180 | LG 460 |
| 390666 | 96-310* | LG 444 |
| 3970261 | 396-764* | LG 537 |
| 3970261 | 596-341* | LG 482 |
| 3970261 | 96-341* | LG 446 |
| 400120 | 80-741 | LG 852 |
| 4119024 | 392-013* | LG 480 |
| 4124087 | 391-591* | LG 481 |
| 4124087 | 92-014 | LG 481 |
| 4137186 | 391-591* | LG 481 |
| 4137186 | 91-591 | LG 481 |
| 4163105 | 391-591* | LG 481 |
| 4163106 | 391-591* | LG 481 |
| 4176600 | 394-075* | LG 571 |
| 4176600 | 94-076 | LG 571 |
| 4186582 | 96-795* | LG 481 |
| 443126 | 04-125 | LG 694 |
| 444708 | 80-741 | LG 852 |
| 463017 | 02-535 | |
| 463025 | 80-036 | LG 727 |
| 463107 | 02-531 | |
| 470510 | 02-195 | LG 676 |
| 470515 | 02-182 | LG 676 |
| 48199 | 78-673 | LG 839 |
| 48269 | 78-300 | LG 833 |
| 5000039 | 42-008 | LG 945 |
| 500534 | 45-205 | LG 228 |
| 500904 | 91-342 | LG 447 |
| 52153 | 78-021 | LG 832 |
| 545549 | 45-091 | LG 249 |
| 546285 | 32-107 | LG 676 |
| 546286 | 02-191 | LG 676 |
| 551849 | 48-211 | LG 233 |
| 552153 | 34-007 | LG 826 |
| 552163 | 78-640 | LG 835 |
| 552172 | 45-030 | LG 245 |
| 552184 | 45-220 | LG 232 |
| 552187 | 09-802 | LG 233 |
| 552187 | 48-141 | LG 249 |
| 552188 | 82-306 | LG 874 |
| 552195 | 78-641 | LG 835 |
| 552200 | 78-031 | LG 826 |
| 552312 | 82-307-0 | LG 874 |
| 553668 | 09-804 | LG 233 |
| 553794 | 30-412 | LG 220 |
| 554594 | 30-412 | LG 220 |
| 593793 | 45-205 | LG 228 |
| 64123-60 | 80-741 | LG 852 |
| 641260 | 80-741 | LG 852 |
| 79050 | 396-739* | LG 479 |
| 79050 | 96-801* | LG 479 |
| 990385 | 73-008 | LG 848 |
| 99038-5 | 73-008 | LG 848 |
| 990947 | 33-128-1 | LG 741 |
| 991296 | 73-008 | LG 848 |
| A500534 | 45-205 | LG 228 |
| A554594 | 30-412 | LG 220 |
| E500534 | 45-205 | LG 228 |
| ISP1734306000600 | 42-008 | LG 945 |
| ISP3554594M1 | 30-412 | LG 220 |
| J182519 | 78-300 | LG 833 |
| J310089 | 45-104 | LG 939 |
| J312321 | 80-014 | LG 727 |
| J320774 | 80-036 | LG 727 |
| J321292 | 80-036 | LG 727 |
| J343060 | 42-008 | LG 945 |
| J345050 | 45-227 | LG 234 |
| J350759 | 45-207 | LG 236 |
| J443126 | 04-125 | LG 694 |
| J444708 | 80-741 | LG 852 |
| J463017 | 02-535 | |
| J463107 | 02-531 | |
| J470510 | 02-195 | LG 676 |
| J470515 | 02-182 | LG 676 |
| J500534 | 45-205 | LG 228 |
| J554594 | 30-412 | LG 220 |
| JA-518845 | 49-834 | LG 611 |
| JA-518846 | 49-810 | LG 612 |
| JT391039 | 91-363 | LG 481 |
| JT391039 | 96-696* | LG 481 |
| JT391040 | 91-364 | LG 481 |
| JT391040 | 96-795* | LG 481 |
| PK500534 | 45-205 | LG 228 |
| PK554594 | 30-412 | LG 220 |
| S212350759 | 45-207 | LG 236 |
| S21-2350759 | 45-207 | LG 236 |
| T470515 | 02-182 | LG 676 |
| Z14014 | 80-741 | LG 852 |
| **JARVIS, R.E.** | | |
| 754-0145 | 75-145 | LG 300 |
| 754-0145954-0935 | 75-145 | LG 300 |
| 754-0194 | 75-090 | LG 301 |
| 754-0230 | 75-008 | LG 301 |
| 754-0266 | 75-016 | LG 301 |
| 754-0293 | 75-018 | LG 301 |
| 754-0935 | 75-092 | LG 304 |
| 954-0145 | 75-145 | LG 300 |
| 954-0145A | 75-145 | LG 300 |
| 954-015A | 75-145 | LG 300 |
| 954-0194 | 75-090 | LG 301 |
| 954-0230 | 75-008 | LG 301 |
| 954-0266 | 75-016 | LG 301 |
| 954-0266A | 75-016 | LG 301 |
| 954-0293 | 75-018 | LG 301 |
| **JEWELCOR** | | |
| 754-0145 | 75-145 | LG 300 |
| 754-0151 | 75-004 | LG 301 |
| 754-0201 | 75-441 | LG 334 |
| 754-0234 | 75-441 | LG 334 |
| 954-0145 | 75-145 | LG 300 |
| 954-0145A | 75-145 | LG 300 |
| 954-0151 | 75-004 | LG 301 |
| 954-015A | 75-145 | LG 300 |
| 954-0201 | 75-441 | LG 334 |
| 954-0234 | 75-441 | LG 334 |
| **JOHN DEERE** | | |
| 24H1682 | 78-114 | LG 829 |
| 26H10 | 02-401 | LG 790 |
| 2922 | 33-386 | LG 942 |
| 300295 | 33-386 | LG 942 |
| 44745 | 33-386 | LG 942 |
| 57M7120 | 33-033 | LG 742 |
| 5WP1001511K2 | 591-585* | LG 493 |
| 5WP100511KT | 591-585* | LG 493 |
| 5WP1008199K2 | 591-585* | LG 493 |
| 5WP1008199K2 | 91-585 | LG 493 |
| 5WP1008199KT | 591-585* | LG 493 |
| 5WP1008199KT | 91-585 | LG 493 |
| 8597 | 45-225 | LG 232 |
| 9266 | 45-295 | LG 232 |
| 941-0141 | 45-000 | LG 237 |
| 9660 | 33-015 | LG 948 |
| 99M7069 | 33-034 | LG 742 |
| AE24459 | 45-205 | LG 228 |
| AE48897 | 78-130 | LG 829 |
| AH77090 | 02-176 | LG 676 |
| AH77091 | 02-188 | LG 676 |
| AM100018 | 49-401 | LG 605 |
| AM100137 | 30-102 | LG 220 |
| AM100310 | 35-014 | LG 806 |
| AM100538 | 396-734* | LG 489 |
| AM100538 | 596-734* | LG 489 |
| AM100538 | 91-394 | LG 489 |
| AM100644 | 45-114 | LG 938 |
| AM100645 | 45-117 | LG 938 |
| AM100750 | 83-301 | LG 816 |
| AM100945 | 396-709* | LG 489 |
| AM100945 | 596-309* | LG 489 |
| AM100945 | 91-400 | LG 488 |
| AM100945 | 96-309* | LG 488 |
| AM100946 | 191-392 | LG 488 |
| AM100946 | 396-709* | LG 489 |
| AM100946 | 596-309* | LG 489 |
| AM100946 | 92-109 | LG 489 |
| AM100946 | 96-309* | LG 488 |
| AM100991 | 396-352* | LG 489 |
| AM100991 | 91-398 | LG 488 |
| AM100991 | 91-400 | LG 488 |
| AM100991 | 92-109 | LG 489 |
| AM101054 | 69-282 | LG 817 |
| AM101054 | 83-282 | LG 817 |

X



* OREGON® Gator™ replacement blade

## JOHN DEERE

| OEM No. | OREGON | Page |
|---|---|---|
| AM101054 | 83-402 | LG 817 |
| AM101191 | 30-303 | LG 198 |
| AM101191 | 30-810 | LG 198 |
| AM101191 | 69-032 | LG 198 |
| AM101207 | 83-283 | LG 818 |
| AM101207 | 83-403 | LG 818 |
| AM101378 | 83-301 | LG 816 |
| AM101406 | 33-248 | LG 731 |
| AM101537 | 91-399 | LG 493 |
| AM101538 | 91-399 | LG 493 |
| AM101539 | 91-399 | LG 493 |
| AM101561 | 33-377 | LG 943 |
| AM101589 | 72-725 | LG 1044 |
| AM101883 | 72-725 | LG 1044 |
| AM102190 | 15-511 | LG 292 |
| AM102322 | 34-030 | LG 821 |
| AM102323 | 34-009 | LG 821 |
| AM102401 | 396-775* | LG 493 |
| AM102401 | 596-775* | LG 493 |
| AM102401 | 91-395 | LG 493 |
| AM102402 | 91-395 | LG 493 |
| AM102423 | 02-193 | LG 676 |
| AM102544 | 33-388 | LG 943 |
| AM102544 | 33-393 | LG 943 |
| AM102551 | 33-386 | LG 942 |
| AM103018 | 34-015 | LG 821 |
| AM103018 | 78-114 | LG 829 |
| AM103019 | 34-033 | LG 821 |
| AM103019 | 34-042 | LG 823 |
| AM103019 | 78-114 | LG 829 |
| AM103052 | 45-303 | LG 804 |
| AM103286 | 33-393 | LG 943 |
| AM-103286 | 33-393 | LG 943 |
| AM103290 | 33-330 | LG 729 |
| AM103379 | 78-033 | LG 834 |
| AM103480 | 34-017 | LG 821 |
| AM103480 | 78-113 | LG 829 |
| AM103504 | 82-332 | LG 891 |
| AM103542 | 78-113 | LG 829 |
| AM104032 | 07-309 | LG 772 |
| AM104373 | 49-816 | LG 612 |
| AM104403 | 33-019 | LG 948 |
| AM104484 | 33-015 | LG 948 |
| AM104489 | 396-735* | LG 452 |
| AM104489 | 596-308* | LG 548 |
| AM104489 | 96-308* | LG 456 |
| AM104490 | 396-726* | LG 391 |
| AM104490 | 596-344* | LG 495 |
| AM104490 | 91-256 | LG 437 |
| AM104490 | 96-344* | LG 536 |
| AM104560 | 30-311 | LG 199 |
| AM104560 | 30-804 | LG 199 |
| AM104560 | 69-031 | LG 199 |
| AM104652 | 396-709* | LG 489 |
| AM104652 | 596-309* | LG 489 |
| AM104652 | 96-309* | LG 488 |
| AM104806 | 49-300 | LG 626 |
| AM104884 | 33-015 | LG 948 |
| AM105564 | 34-024 | LG 822 |
| AM105654 | 78-130 | LG 829 |
| AM105998 | 55-122 | LG 770 |
| AM106357 | 33-401 | LG 732 |
| AM106542 | 34-007 | LG 826 |
| AM106564 | 34-022 | LG 822 |
| AM106627 | 78-025 | LG 829 |
| AM106634 | 396-738* | LG 485 |
| AM106953 | 30-430 | LG 211 |
| AM106953 | 30-846 | LG 211 |
| AM107180 | 31-909 | LG 928 |
| AM107314 | 07-100 | LG 774 |
| AM107314 | 07-101 | LG 775 |
| AM107314 | 07-102 | LG 774 |
| AM107344 | 07-309 | LG 772 |
| AM107423 | 69-282 | LG 817 |
| AM107423 | 83-282 | LG 817 |
| AM107423 | 83-402 | LG 817 |
| AM107468 | 34-024 | LG 822 |
| AM107468 | 78-112 | LG 829 |
| AM107539 | 49-070 | LG 604 |
| AM107560 | 72-098 | LG 1040 |
| AM107561 | 72-099 | LG 1040 |
| AM107922 | 07-406 | LG 767 |
| AM108243 | 30-025 | LG 208 |
| AM108356 | 07-107 | LG 774 |
| AM108483 | 33-027 | LG 947 |
| AM-108483 | 33-027 | LG 947 |
| AM108653 | 35-032 | LG 809 |
| AM108848 | 33-246 | LG 732 |
| AM108923 | 78-113 | LG 829 |
| AM108925 | 82-332 | LG 891 |
| AM112300 | 55-245 | LG 215 |
| AM115138 | 72-115 | LG 1033 |
| AM115397 | 55-252 | LG 1019 |
| AM115442 | 91-381 | LG 483 |
| AM115442 | 91-401 | LG 483 |
| AM115442 | 91-447 | LG 538 |
| AM115682 | 34-030 | LG 821 |
| AM116236 | 30-710 | LG 181 |
| AM116270 | 43-014 | LG 932 |
| AM116299 | 72-094 | LG 1042 |
| AM116299 | 72-165 | LG 1041 |
| AM116304 | 07-103 | LG 775 |
| AM116304 | 07-160 | LG 774 |
| AM1163041 | 07-103 | LG 775 |
| AM118315 | 45-000 | LG 237 |
| AM118315 | 45-010 | LG 238 |
| AM118447 | 78-131 | LG 823 |
| AM118532 | 82-354 | LG 892 |
| AM118802 | 33-002 | LG 946 |
| AM-118802 | 33-002 | LG 946 |
| AM119130 | 33-002 | LG 946 |
| AM119139 | 33-002 | LG 946 |
| AM-119139 | 33-002 | LG 946 |
| AM119301 | 78-131 | LG 823 |
| AM119683 | 33-112 | LG 735 |
| AM119686 | 45-118 | LG 760 |
| AM120124 | 45-302 | LG 804 |
| AM120214 | 45-302 | LG 804 |
| AM120550 | 45-302 | LG 804 |
| AM121229 | 82-333 | LG 892 |
| AM121238 | 34-020 | LG 821 |
| AM121342 | 82-333 | LG 892 |
| AM121415 | 49-816 | LG 612 |
| AM121602 | 78-025 | LG 829 |
| AM121608 | 30-085 | LG 203 |
| AM121608 | 30-088 | LG 203 |
| AM121608 | 30-815 | LG 203 |
| AM121969 | 78-033 | LG 834 |
| AM121970 | 78-130 | LG 829 |
| AM122115 | 76-067-0 | LG 726 |
| AM122120 | 45-205 | LG 228 |
| AM122156 | 80-740 | LG 852 |
| AM122444 | 82-354 | LG 892 |
| AM122867 | 82-354 | LG 892 |
| AM123342 | 80-742 | LG 852 |
| AM123355 | 76-070-0 | LG 726 |
| AM12355 | 76-070-0 | LG 726 |
| AM124346 | 78-131 | LG 823 |
| AM124346 | 78-134 | LG 829 |
| AM124511 | 82-354 | LG 892 |
| AM125424 | 83-013 | LG 817 |
| AM125424 | 83-401 | LG 817 |
| AM126226 | 82-355 | LG 892 |
| AM126304 | 33-246 | LG 732 |
| AM126304 | 33-407 | LG 732 |
| AM127304 | 45-000 | LG 237 |
| AM127304 | 45-010 | LG 238 |
| AM1288925 | 33-028 | LG 947 |
| AM128925 | 33-028 | LG 947 |
| AM129824 | 49-008 | LG 623 |
| AM129824 | 49-070 | LG 604 |
| AM130365 | 33-334 | LG 730 |
| AM130365 | 33-335 | LG 730 |
| AM130365 | 33-336 | LG 730 |
| AM131017 | 45-303 | LG 804 |
| AM131966 | 33-002 | LG 946 |
| AM132453 | 33-333 | LG 786 |
| AM132764 | 78-128 | LG 829 |
| AM133596 | 33-074 | LG 944 |
| AM133602 | 72-165 | LG 1041 |
| AM133756 | 34-038 | LG 821 |
| AM134292 | 82-358 | LG 892 |
| AM134501 | 34-100 | LG 830 |
| AM134829 | 49-002 | LG 623 |
| AM135526 | 34-103 | LG 830 |
| AM135773 | 34-104 | LG 830 |
| AM136357 | 34-106 | LG 830 |
| AM136357 | 34-107 | LG 823 |
| AM136367 | 34-107 | LG 823 |
| AM136397 | 34-107 | LG 823 |
| AM136733 | 82-358 | LG 892 |
| AM136890 | 80-740 | LG 852 |
| AM137324 | 396-352* | LG 489 |
| AM137324 | 91-398 | LG 488 |
| AM137324 | 92-109 | LG 489 |
| AM137326 | 396-352* | LG 489 |
| AM137326 | 92-109 | LG 489 |
| AM137327 | 592-615* | LG 491 |
| AM137327 | 91-449 | LG 492 |
| AM137327 | 92-110 | LG 491 |
| AM137327 | 92-615* | LG 491 |
| AM137328 | 192-106 | LG 491 |
| AM137328 | 592-615* | LG 491 |
| AM137328 | 92-615* | LG 491 |
| AM137329 | 592-615* | LG 491 |
| AM137329 | 92-110 | LG 491 |
| AM137329 | 92-615* | LG 491 |
| AM137330 | 192-106 | LG 491 |
| AM137330 | 592-615* | LG 491 |
| AM137330 | 92-615* | LG 491 |
| AM137333 | 192-106 | LG 491 |
| AM137333 | 592-615* | LG 491 |
| AM137333 | 92-615* | LG 491 |
| AM137757 | 592-616* | LG 485 |
| AM137757 | 92-616* | LG 485 |
| AM137758 | 592-616* | LG 485 |
| AM137758 | 92-616* | LG 485 |
| AM138079 | 34-100 | LG 830 |
| AM141031 | 192-106 | LG 491 |
| AM141031 | 592-615* | LG 491 |
| AM141031 | 92-615* | LG 491 |
| AM141032 | 592-615* | LG 491 |
| AM141032 | 92-110 | LG 491 |
| AM141032 | 92-615* | LG 491 |
| AM141033 | 192-106 | LG 491 |
| AM141033 | 592-615* | LG 491 |
| AM141033 | 92-615* | LG 491 |
| AM141034 | 592-615* | LG 491 |
| AM141034 | 92-110 | LG 491 |
| AM141034 | 92-615* | LG 491 |
| AM141035 | 592-616* | LG 485 |
| AM141035 | 92-616* | LG 485 |
| AM141036 | 592-616* | LG 485 |
| AM141036 | 92-616* | LG 485 |
| AM141041 | 396-352* | LG 489 |
| AM141041 | 91-398 | LG 488 |
| AM141041 | 92-109 | LG 489 |
| AM143469 | 82-358 | LG 892 |
| AM254424 | 83-284 | LG 818 |
| AM30078 | 33-320-0 | LG 731 |
| AM30108 | 72-306 | LG 1038 |
| AM30194 | 78-112 | LG 829 |
| AM30698 | 591-594* | LG 482 |
| AM30698 | 91-389 | LG 538 |
| AM30698 | 91-395 | LG 493 |
| AM30800 | 30-082 | LG 205 |
| AM30844 | 78-113 | LG 829 |
| AM30900 | 30-070 | LG 216 |
| AM30900 | 30-822 | LG 216 |
| AM30947 | 33-606 | LG 789 |
| AM30949 | 33-008 | LG 789 |
| AM30950 | 33-362 | LG 784 |
| AM30958 | 49-009 | LG 625 |
| AM30962 | 49-029 | LG 609 |
| AM30965 | 31-904 | LG 930 |
| AM30981 | 72-306 | LG 1038 |
| AM31009 | 72-307 | LG 1038 |
| AM31029 | 33-016 | LG 789 |
| AM31034 | 30-081 | LG 205 |
| AM31034 | 30-093 | LG 206 |
| AM31034 | 30-812 | LG 206 |
| AM31100 | 396-725* | LG 538 |
| AM31100 | 91-389 | LG 538 |
| AM31100 | 96-394* | LG 538 |
| AM31126 | 34-001 | LG 821 |
| AM31400 | 30-080 | LG 205 |
| AM31400 | 30-819 | LG 205 |
| AM31850 | 07-400 | LG 767 |
| AM31995 | 33-388 | LG 943 |
| AM31995 | 33-393 | LG 943 |
| AM32196 | 34-017 | LG 821 |
| AM32196 | 78-113 | LG 829 |
| AM32318 | 33-393 | LG 943 |
| AM-32318 | 33-393 | LG 943 |
| AM32369 | 34-044 | LG 821 |
| AM32369 | 78-113 | LG 829 |
| AM32639 | 72-307 | LG 1038 |
| AM32672 | 34-030 | LG 821 |
| AM32672 | 78-114 | LG 829 |
| AM32705 | 34-009 | LG 821 |
| AM32868 | 45-114 | LG 938 |
| AM32869 | 45-117 | LG 938 |
| AM32928 | 49-039 | LG 629 |
| AM32930 | 49-002 | LG 623 |
| AM33478 | 35-028 | LG 810 |
| AM33574 | 34-038 | LG 821 |
| AM33718 | 72-306 | LG 1038 |
| AM33845 | 33-400 | LG 732 |
| AM34738 | 33-401 | LG 732 |
| AM34890 | 35-001 | LG 806 |
| AM34980 | 35-007 | LG 806 |
| AM35000 | 33-628 | LG 789 |
| AM35015 | 35-002 | LG 806 |
| AM35015 | 35-023 | LG 806 |
| AM35020 | 43-011 | LG 935 |
| AM35176 | 83-300 | LG 819 |
| AM35304 | 72-099 | LG 1040 |
| AM35443 | 45-000 | LG 237 |
| AM35557 | 91-391 | LG 489 |
| AM35557 | 91-394 | LG 489 |
| AM35585 | 34-018 | LG 821 |
| AM-35585 | 34-018 | LG 821 |
| AM35590 | 34-020 | LG 821 |
| AM35709 | 91-399 | LG 493 |
| AM35742 | 43-200 | LG 932 |
| AM35759 | 33-365 | LG 784 |
| AM35828 | 91-399 | LG 493 |
| AM35831 | 78-113 | LG 829 |
| AM35862 | 78-112 | LG 829 |
| AM36407 | 91-399 | LG 493 |
| AM36483 | 07-100 | LG 774 |
| AM36483 | 07-102 | LG 774 |
| AM36647 | 91-395 | LG 493 |
| AM37160 | 49-978 | LG 609 |
| AM37200 | 33-400 | LG 732 |
| AM37201 | 30-093 | LG 206 |
| AM37201 | 30-812 | LG 206 |
| AM37249 | 34-106 | LG 830 |
| AM37249 | 78-112 | LG 829 |

X

* OREGON® Gator™ replacement blade

# 2019 OEM X-Reference

## JOHN DEERE

| OEM No. | OREGON | Page |
|---|---|---|
| AM37249 | 78-131 | LG 823 |
| AM37321 | 78-113 | LG 829 |
| AM37442 | 78-112 | LG 829 |
| AM37540 | 30-106 | LG 179 |
| AM37816 | 30-105 | LG 179 |
| AM37979 | 91-398 | LG 488 |
| AM38171 | 34-044 | LG 821 |
| AM38171 | 78-113 | LG 829 |
| AM38227 | 33-398 | LG 944 |
| AM-38227 | 33-398 | LG 944 |
| AM38314 | 396-775* | LG 493 |
| AM38314 | 596-775* | LG 493 |
| AM38314 | 91-395 | LG 493 |
| AM38411 | 33-333 | LG 786 |
| AM38708 | 07-100 | LG 774 |
| AM38708 | 07-102 | LG 774 |
| AM38782 | 45-103 | LG 938 |
| AM38990 | 30-104 | LG 180 |
| AM39001 | 49-008 | LG 623 |
| AM39089 | 35-023 | LG 806 |
| AM39489 | 33-384 | LG 947 |
| AM39653 | 83-300 | LG 819 |
| AM39682 | 49-102 | LG 602 |
| AM39687 | 83-028 | LG 817 |
| AM39849 | 33-384 | LG 947 |
| AM39966 | 396-738* | LG 485 |
| AM39966 | 91-393 | LG 485 |
| AM41648 | 78-114 | LG 829 |
| AM54223 | 72-307 | LG 1038 |
| AM54243 | 72-307 | LG 1038 |
| AM-83541 | 48-320 | LG 238 |
| AN111537 | 45-207 | LG 236 |
| AR48236 | 02-700 | LG 765 |
| AT11855 | 33-320-0 | LG 731 |
| B5235H | 02-196 | LG 676 |
| C16522 | 45-003 | LG 244 |
| CH12767 | 30-026 | LG 208 |
| CH18688 | 45-003 | LG 244 |
| D28041 | 33-019 | LG 948 |
| E16522 | 45-003 | LG 244 |
| E16522 | 45-013 | LG 853 |
| EPC201693 | 396-743* | LG 493 |
| EPC201693 | 596-743* | LG 493 |
| GC00032 | 96-811* | LG 489 |
| GC00073 | 75-918 | LG 293 |
| GC00073 | 75-976 | LG 292 |
| GC00081 | 75-918 | LG 293 |
| GC00081 | 75-976 | LG 292 |
| GC00175 | 96-811* | LG 489 |
| GC00344 | 96-811* | LG 489 |
| GDU10232 | 396-727* | LG 467 |
| GDU10232 | 596-347* | LG 448 |
| GDU10232 | 91-308 | LG 467 |
| GDU10232 | 96-347* | LG 387 |
| GJ66841 | 49-021 | LG 629 |
| GJ66844 | 49-816 | LG 612 |
| GJ69018 | 49-816 | LG 612 |
| GX00166 | 92-109 | LG 489 |
| GX10003 | 72-022 | LG 1033 |
| GX10062 | 15-034 | LG 293 |
| GX10065 | 75-298 | LG 295 |
| GX10168 | 72-119 | LG 1040 |
| GX10851 | 75-298 | LG 295 |
| GX20006 | 75-979 | LG 255 |
| GX20072 | 175-919 | LG 293 |
| GX20072 | 75-919 | LG 293 |
| GX20072 | 75-992 | LG 293 |
| GX20241 | 75-978 | LG 293 |
| GX20249 | 191-139 | LG 491 |
| GX20249 | 92-676* | LG 491 |
| GX20250 | 191-108 | LG 484 |
| GX20250 | 92-675* | LG 484 |
| GX20286 | 34-102 | LG 830 |
| GX20287 | 78-129 | LG 830 |
| GX20305 | 175-992 | LG 293 |
| GX20305 | 75-992 | LG 293 |
| GX20433 | 191-139 | LG 491 |
| GX20433 | 92-676* | LG 491 |
| GX20434 | 91-496 | LG 484 |
| GX20434 | 92-675* | LG 484 |
| GX20571 | 175-800 | |
| GX20571 | 75-800 | LG 257 |
| GX20819 | 92-675* | LG 484 |
| GX21380 | 592-617* | LG 487 |
| GX21380 | 92-103 | LG 487 |
| GX21380 | 92-617* | LG 487 |
| GX21395 | 75-799 | LG 293 |
| GX21784 | 592-616* | LG 485 |
| GX21784 | 92-104 | LG 485 |
| GX21784 | 92-616* | LG 485 |
| GX21785 | 592-616* | LG 485 |
| GX21785 | 91-586 | LG 485 |
| GX21785 | 92-616* | LG 485 |
| GX21786 | 592-616* | LG 485 |
| GX21786 | 92-105 | LG 485 |
| GX21786 | 92-616* | LG 485 |
| GX21833 | 175-800 | |
| GX21833 | 75-800 | LG 257 |
| GX22036 | 75-806 | LG 293 |
| GX22036 | 75-978 | LG 293 |
| GX22151 | 192-106 | LG 491 |
| GX22151 | 592-615* | LG 491 |
| GX22151 | 92-615* | LG 491 |
| GX22190 | 96-811* | LG 489 |
| GX22250 | 99-119 | LG 489 |
| GX2554H | 72-119 | LG 1040 |
| GY00054 | 78-128 | LG 829 |
| GY00054 | 78-132 | LG 830 |
| GY00185 | 33-334 | LG 730 |
| GY00185 | 33-335 | LG 730 |
| GY00185 | 33-336 | LG 730 |
| GY2004 | 33-085 | LG 948 |
| GY20050 | 82-356 | LG 893 |
| GY20067 | 78-118-0 | LG 830 |
| GY20094 | 33-085 | LG 948 |
| GY20110 | 78-133 | LG 831 |
| GY20156 | 60-079 | LG 709 |
| GY20198 | 82-360 | LG 893 |
| GY20454 | 82-359 | LG 893 |
| GY20454 | 82-360 | LG 893 |
| GY20567 | 191-139 | LG 491 |
| GY20567 | 92-676* | LG 491 |
| GY20568 | 191-108 | LG 484 |
| GY20568 | 92-675* | LG 484 |
| GY20569 | 396-706* | LG 538 |
| GY20569 | 596-306* | LG 487 |
| GY20569 | 91-380 | LG 538 |
| GY20569 | 96-306* | LG 538 |
| GY20570 | 175-919 | LG 293 |
| GY20570 | 75-919 | LG 293 |
| GY20571 | 75-992 | LG 293 |
| GY20572 | 15-483 | LG 293 |
| GY20574 | 30-085 | LG 203 |
| GY20574 | 30-942 | LG 206 |
| GY20629 | 34-109 | LG 831 |
| GY20629 | 78-133 | LG 831 |
| GY20679 | 592-617* | LG 487 |
| GY20679 | 92-103 | LG 487 |
| GY20679 | 92-617* | LG 487 |
| GY20684 | 592-617* | LG 487 |
| GY20684 | 92-103 | LG 487 |
| GY20684 | 92-617* | LG 487 |
| GY20686 | 592-617* | LG 487 |
| GY20686 | 92-103 | LG 487 |
| GY20686 | 92-617* | LG 487 |
| GY20709 | 07-103 | LG 775 |
| GY20785 | 82-356 | LG 893 |
| GY20850 | 192-106 | LG 491 |
| GY20850 | 592-615* | LG 491 |
| GY20850 | 92-615* | LG 491 |
| GY20852 | 592-616* | LG 485 |
| GY20852 | 92-104 | LG 485 |
| GY20852 | 92-616* | LG 485 |
| GY20867 | 82-360 | LG 893 |
| GY20962 | 82-359 | LG 893 |
| GY20962 | 82-360 | LG 893 |
| GY21098 | 82-359 | LG 893 |
| GY21099 | 82-360 | LG 893 |
| GY21106 | 60-079 | LG 709 |
| GY22082 | 34-109 | LG 831 |
| GY22082 | 78-133 | LG 831 |
| HE1401496 | 30-953 | LG 211 |
| HE140-1496 | 30-953 | LG 211 |
| HE140-2522 | 30-430 | LG 211 |
| HE1402628 | 30-846 | LG 211 |
| HE140-2628 | 30-430 | LG 211 |
| JD 8188 | 45-206 | LG 231 |
| JD 8226 | 45-205 | LG 228 |
| JD26039 | 45-206 | LG 231 |
| JD4467 | 45-220 | LG 232 |
| JD7677R | 45-259 | LG 224 |
| JD8188 | 45-206 | LG 231 |
| JD-8188 | 45-206 | LG 231 |
| JD8226 | 45-205 | LG 228 |
| JD-8226 | 45-205 | LG 228 |
| JD8253 | 45-002 | LG 237 |
| JD8597 | 45-225 | LG 232 |
| JD8933 | 45-002 | LG 237 |
| JD9239 | 45-259 | LG 224 |
| JD9239 | 45-295 | LG 232 |
| JD9259 | 45-295 | LG 232 |
| JD9266 | 45-259 | LG 224 |
| JD9296 | 45-295 | LG 232 |
| JD9299 | 45-220 | LG 232 |
| JD9467 | 45-220 | LG 232 |
| KH1205008 | 83-284 | LG 818 |
| LG222698S | 02-407 | LG 790 |
| LG231658 | 49-667 | LG 750 |
| LG270026 | 49-004 | LG 622 |
| LG280439S | 43-100 | LG 932 |
| LG281658S | 49-667 | LG 750 |
| LG295871 | 43-200 | LG 932 |
| LG298090 | 07-101 | LG 775 |
| LG298090S | 07-101 | LG 775 |
| LG298185 | 33-601 | LG 789 |
| LG298968 | 33-365 | LG 784 |
| LG299637 | 49-005 | LG 622 |
| LG299948 | 43-011 | LG 935 |
| LG391681 | 49-006 | LG 622 |
| LG393010S | 35-012 | LG 806 |
| LG394569S | 35-023 | LG 806 |
| LG394698 | 49-102 | LG 602 |
| LG398188 | 49-036 | LG 628 |
| LG399671 | 43-404 | LG 928 |
| LG492932S | 83-013 | LG 817 |
| LG492932S | 83-401 | LG 817 |
| LG493824 | 43-014 | LG 932 |
| LG66768 | 49-667 | LG 750 |
| LG691185 | 33-402 | LG 731 |
| LG691764 | 02-861 | LG 766 |
| LG692191 | 80-037 | LG 727 |
| LG692304 | 35-014 | LG 806 |
| M110006 | 82-333 | LG 892 |
| M110312 | 75-984 | LG 257 |
| M110313 | 175-295 | LG 295 |
| M110313 | 75-295 | LG 295 |
| M110594 | 76-070-0 | LG 726 |
| M110978 | 75-246 | LG 295 |
| M111453 | 91-443 | LG 489 |
| M111489 | 72-094 | LG 1042 |
| M111489 | 72-165 | LG 1041 |
| M111522 | 396-732* | LG 484 |
| M111522 | 596-332* | LG 484 |
| M111522 | 91-447 | LG 538 |
| M111522 | 96-332* | LG 484 |
| M111523 | 396-706* | LG 538 |
| M111523 | 596-306* | LG 487 |
| M111523 | 96-306* | LG 538 |
| M111534 | 75-296 | LG 295 |
| M111564 | 75-296 | LG 295 |
| M112006 | 75-972 | LG 295 |
| M112738 | 91-443 | LG 489 |
| M112847 | 91-391 | LG 489 |
| M112847 | 91-394 | LG 489 |
| M112972 | 91-443 | LG 489 |
| M112974 | 396-709* | LG 489 |
| M112974 | 596-309* | LG 489 |
| M112974 | 96-309* | LG 488 |
| M112991 | 396-709* | LG 489 |
| M112991 | 596-309* | LG 489 |
| M112991 | 91-403 | LG 488 |
| M112991 | 96-309* | LG 488 |
| M113492 | 91-443 | LG 489 |
| M113517 | 396-732* | LG 484 |
| M113517 | 596-332* | LG 484 |
| M113517 | 91-383 | LG 484 |
| M113517 | 91-384 | LG 487 |
| M113517 | 96-332* | LG 484 |
| M113518 | 396-706* | LG 538 |
| M113518 | 596-306* | LG 487 |
| M113518 | 91-384 | LG 487 |
| M113518 | 96-306* | LG 538 |
| M113878 | 396-734* | LG 489 |
| M113878 | 596-734* | LG 489 |
| M113955 | 72-131 | LG 1041 |
| M114002 | 72-131 | LG 1041 |
| M114581 | 396-732* | LG 484 |
| M114581 | 596-332* | LG 484 |
| M114581 | 91-381 | LG 483 |
| M114581 | 91-447 | LG 538 |
| M114581 | 96-332* | LG 484 |
| M114582 | 396-706* | LG 538 |
| M114582 | 596-306* | LG 487 |
| M114582 | 91-380 | LG 538 |
| M114582 | 96-306* | LG 538 |
| M11489 | 72-094 | LG 1042 |
| M115245 | 72-129 | LG 1041 |
| M115328 | 396-732* | LG 484 |
| M115328 | 596-332* | LG 484 |
| M115328 | 91-381 | LG 483 |
| M115328 | 91-447 | LG 538 |
| M115328 | 96-332* | LG 484 |
| M115329 | 396-706* | LG 538 |
| M115329 | 596-306* | LG 487 |
| M115329 | 91-380 | LG 538 |
| M115329 | 96-306* | LG 538 |
| M115495 | 396-732* | LG 484 |
| M115495 | 596-332* | LG 484 |
| M115495 | 91-381 | LG 483 |
| M115495 | 91-447 | LG 538 |
| M115495 | 96-332* | LG 484 |
| M115496 | 396-706* | LG 538 |
| M115496 | 596-306* | LG 487 |
| M115496 | 91-380 | LG 538 |
| M115496 | 91-383 | LG 484 |
| M115496 | 96-306* | LG 538 |
| M115978 | 30-037 | LG 199 |
| M115978 | 30-935 | LG 201 |
| M117254 | 30-321 | LG 199 |
| M117608 | 15-485 | LG 293 |
| M118684 | 75-300 | LG 295 |
| M118685 | 75-300 | LG 295 |
| M118685 | 75-984 | LG 257 |
| M118958 | 396-709* | LG 489 |
| M118958 | 596-309* | LG 489 |
| M118958 | 96-309* | LG 488 |
| M119539 | 75-247 | LG 295 |
| M119798 | 591-594* | LG 482 |
| M119799 | 591-594* | LG 482 |

X



* OREGON® Gator™ replacement blade

## JOHN DEERE

| OEM No. | OREGON | Page |
|---|---|---|
| M119872 | 15-486 | LG 293 |
| M119872 | 75-295 | LG 295 |
| M119975 | 91-395 | LG 493 |
| M120381 | 15-037 | LG 295 |
| M121589 | 591-594* | LG 482 |
| M121589 | 91-589 | LG 482 |
| M122106 | 75-703 | LG 295 |
| M122456 | 82-333 | LG 892 |
| M122674 | 15-035 | LG 295 |
| M122907 | 75-708 | LG 295 |
| M123281 | 75-297 | LG 295 |
| M124324 | 45-206 | LG 231 |
| M124412 | 73-028 | LG 850 |
| M124413 | 73-028 | LG 850 |
| M124413 | 73-100 | LG 850 |
| M124417 | 45-006 | LG 249 |
| M124497 | 07-314 | LG 773 |
| M124767 | 91-443 | LG 489 |
| M124896 | 91-496 | LG 484 |
| M124896 | 96-340* | LG 539 |
| M125172 | 72-165 | LG 1041 |
| M125218 | 75-298 | LG 295 |
| M125383 | 15-487 | LG 293 |
| M125413 | 91-443 | LG 489 |
| M125808 | 91-443 | LG 489 |
| M126536 | 175-299 | LG 295 |
| M126536 | 75-299 | LG 295 |
| M127082 | 45-007 | LG 853 |
| M127129 | 91-449 | LG 492 |
| M127129 | 96-340* | LG 539 |
| M127138 | 45-009 | LG 853 |
| M127164 | 45-008 | LG 853 |
| M127466 | 396-725* | LG 538 |
| M127466 | 91-448 | LG 482 |
| M127466 | 96-394* | LG 538 |
| M127500 | 396-354* | LG 484 |
| M127500 | 596-354* | LG 484 |
| M127500 | 90-348 | LG 484 |
| M127500 | 96-354* | LG 484 |
| M127538 | 45-009 | LG 853 |
| M127673 | 396-354* | LG 484 |
| M127673 | 596-354* | LG 484 |
| M127673 | 96-354* | LG 484 |
| M128485 | 396-730* | LG 490 |
| M128485 | 596-730* | LG 490 |
| M128485 | 91-078 | LG 490 |
| M128887 | 31-100 | LG 929 |
| M128887 | 31-908 | LG 929 |
| M128887 | 31-909 | LG 928 |
| M12907 | 75-708 | LG 295 |
| M131287 | 33-419 | LG 732 |
| M131958 | 396-730* | LG 490 |
| M131958 | 596-730* | LG 490 |
| M131958 | 91-587 | LG 490 |
| M133381 | 396-730* | LG 490 |
| M133381 | 596-730* | LG 490 |
| M134305 | 396-769* | LG 488 |
| M134305 | 596-769* | LG 488 |
| M134305 | 91-138 | LG 488 |
| M134305 | 96-364* | LG 488 |
| M135334 | 396-769* | LG 488 |
| M135334 | 596-769* | LG 488 |
| M135334 | 96-364* | LG 488 |
| M135589 | 91-381 | LG 483 |
| M135589 | 91-401 | LG 483 |
| M135589 | 91-447 | LG 538 |
| M135589 | 96-618* | LG 483 |
| M135590 | 396-706* | LG 538 |
| M135590 | 596-306* | LG 487 |
| M135590 | 91-404 | LG 487 |
| M135590 | 96-306* | LG 538 |
| M135782 | 15-036 | LG 295 |
| M135881 | 91-446 | LG 491 |
| M136185 | 396-770* | LG 485 |
| M136194 | 396-770* | LG 485 |
| M136194 | 91-079 | LG 485 |
| M136195 | 396-769* | LG 488 |
| M136195 | 596-769* | LG 488 |
| M136195 | 91-138 | LG 488 |
| M136195 | 96-364* | LG 488 |
| M136927 | 15-488 | LG 293 |
| M137556 | 30-322 | LG 200 |
| M139802 | 91-449 | LG 492 |
| M139802 | 92-110 | LG 491 |
| M139802 | 96-340* | LG 539 |
| M139803 | 91-496 | LG 484 |
| M139803 | 92-110 | LG 491 |
| M139803 | 96-340* | LG 539 |
| M139975 | 91-604* | LG 492 |
| M139976 | 91-446 | LG 491 |
| M139976 | 91-604* | LG 492 |
| M139977 | 91-604* | LG 492 |
| M141627 | 15-490 | LG 294 |
| M141669 | 396-743* | LG 493 |
| M141669 | 596-743* | LG 493 |
| M141785 | 396-734* | LG 489 |
| M141785 | 596-734* | LG 489 |
| M141785 | 91-394 | LG 489 |
| M141786 | 396-775* | LG 493 |
| M141786 | 596-775* | LG 493 |
| M141786 | 91-395 | LG 493 |
| M142514 | 396-743* | LG 493 |
| M142514 | 596-743* | LG 493 |
| M142514 | 91-588 | LG 493 |
| M142997 | 15-491 | LG 294 |
| M143019 | 175-300 | LG 295 |
| M143019 | 75-300 | LG 295 |
| M143019 | 75-984 | LG 257 |
| M143291 | 07-304 | LG 770 |
| M143504 | 396-771* | LG 492 |
| M143504 | 596-771* | LG 492 |
| M143504 | 90-309 | LG 492 |
| M143520 | 396-719* | LG 488 |
| M143520 | 596-719* | LG 488 |
| M143520 | 90-354 | LG 488 |
| M143749 | 92-114 | LG 493 |
| M143888 | 15-492 | LG 294 |
| M144012 | 73-028 | LG 850 |
| M144012 | 73-100 | LG 850 |
| M144044 | 75-807 | LG 255 |
| M144196 | 396-730* | LG 490 |
| M144196 | 596-730* | LG 490 |
| M144196 | 92-113 | LG 490 |
| M144297 | 396-710* | LG 492 |
| M144297 | 596-722* | LG 492 |
| M144652 | 396-769* | LG 488 |
| M144652 | 596-769* | LG 488 |
| M144652 | 92-118 | LG 488 |
| M144652 | 96-364* | LG 488 |
| M144677 | 175-300 | LG 295 |
| M144677 | 75-300 | LG 295 |
| M144935 | 396-710* | LG 492 |
| M144935 | 596-722* | LG 492 |
| M145476 | 396-354* | LG 484 |
| M145476 | 596-354* | LG 484 |
| M145476 | 90-348 | LG 484 |
| M145476 | 96-354* | LG 484 |
| M145516 | 396-719* | LG 488 |
| M145516 | 596-719* | LG 488 |
| M145969 | 92-110 | LG 491 |
| M145969 | 96-340* | LG 539 |
| M147278 | 15-493 | LG 294 |
| M148556 | 15-494 | LG 294 |
| M148613 | 91-446 | LG 491 |
| M148613 | 91-604* | LG 492 |
| M149422 | 192-106 | LG 491 |
| M149422 | 592-615* | LG 491 |
| M149422 | 92-615* | LG 491 |
| M150236 | 43-012 | LG 927 |
| M151276 | 15-130 | LG 296 |
| M152284 | 75-807 | LG 255 |
| M152702 | 49-411 | LG 759 |
| M152708 | 49-014 | LG 759 |
| M152714 | 49-016 | LG 759 |
| M152726 | 396-719* | LG 488 |
| M152726 | 596-719* | LG 488 |
| M152727 | 396-771* | LG 492 |
| M152727 | 596-771* | LG 492 |
| M152727 | 91-590 | LG 492 |
| M153118 | 396-352* | LG 489 |
| M153118 | 92-109 | LG 489 |
| M153160 | 75-801 | LG 296 |
| M15406 | 92-110 | LG 491 |
| M154061 | 592-615* | LG 491 |
| M154061 | 92-110 | LG 491 |
| M154061 | 92-615* | LG 491 |
| M154062 | 592-615* | LG 491 |
| M154062 | 92-110 | LG 491 |
| M154062 | 92-615* | LG 491 |
| M154158 | 91-403 | LG 488 |
| M154159 | 396-352* | LG 489 |
| M154159 | 92-109 | LG 489 |
| M154295 | 15-497 | LG 294 |
| M154601 | 75-802 | LG 296 |
| M154621 | 175-803 | LG 296 |
| M154621 | 75-803 | LG 258 |
| M154897 | 15-131 | LG 296 |
| M154958 | 75-295 | LG 295 |
| M154958 | 75-300 | LG 295 |
| M154960 | 15-498 | LG 294 |
| M154960 | 75-300 | LG 295 |
| M155343 | 15-499 | LG 294 |
| M155368 | 15-500 | LG 294 |
| M155525 | 75-804 | LG 296 |
| M156416 | 92-110 | LG 491 |
| M156416 | 96-340* | LG 539 |
| M158112 | 396-771* | LG 492 |
| M158112 | 596-771* | LG 492 |
| M158130 | 75-803 | LG 258 |
| M159046 | 91-604* | LG 492 |
| M159047 | 91-604* | LG 492 |
| M159140 | 92-110 | LG 491 |
| M163620 | 15-037 | LG 295 |
| M163983 | 396-730* | LG 490 |
| M163983 | 596-730* | LG 490 |
| M164016 | 396-769* | LG 488 |
| M164016 | 596-769* | LG 488 |
| M164016 | 92-118 | LG 488 |
| M164016 | 96-364* | LG 488 |
| M168223 | 396-730* | LG 490 |
| M168223 | 596-730* | LG 490 |
| M168223 | 91-587 | LG 490 |
| M172924 | 15-131 | LG 296 |
| M40718 | 42-008 | LG 945 |
| M41237 | 591-594* | LG 482 |
| M41237 | 91-389 | LG 538 |
| M41237 | 91-395 | LG 493 |
| M41522 | 45-003 | LG 244 |
| M41522 | 45-013 | LG 853 |
| M41647 | 34-015 | LG 821 |
| M41647 | 78-114 | LG 829 |
| M41809 | 49-411 | LG 759 |
| M41960 | 75-975 | LG 294 |
| M41967 | 396-725* | LG 538 |
| M41967 | 91-389 | LG 538 |
| M41967 | 96-394* | LG 538 |
| M43285 | 02-860 | LG 766 |
| M43820 | 75-300 | LG 295 |
| M44121 | 15-501 | LG 294 |
| M44915 | 49-014 | LG 759 |
| M45800 | 30-941 | LG 219 |
| M45998 | 75-973 | LG 294 |
| M45998 | 75-975 | LG 294 |
| M47043 | 75-973 | LG 294 |
| M47043 | 75-975 | LG 294 |
| M47144 | 45-242 | LG 243 |
| M47147 | 40-502 | LG 586 |
| M47159 | 75-101 | LG 269 |
| M47229 | 78-103 | LG 823 |
| M47494 | 30-095 | LG 206 |
| M47494 | 30-818 | LG 206 |
| M47494 | 69-395 | LG 206 |
| M47765 | 75-973 | LG 294 |
| M47766 | 75-973 | LG 294 |
| M47797 | 49-667 | LG 750 |
| M47845 | 49-004 | LG 622 |
| M47944 | 49-006 | LG 622 |
| M47963 | 49-005 | LG 622 |
| M48452 | 91-391 | LG 489 |
| M48452 | 91-394 | LG 489 |
| M49725 | 49-016 | LG 759 |
| M49778 | 49-307 | LG 625 |
| M63810 | 45-227 | LG 234 |
| M70121 | 33-246 | LG 732 |
| M70121 | 33-407 | LG 732 |
| M70127 | 30-937 | LG 202 |
| M70128 | 30-304 | LG 199 |
| M70283 | 30-936 | LG 202 |
| M70284 | 30-305 | LG 198 |
| M71952 | 30-313 | LG 201 |
| M73509 | 396-735* | LG 452 |
| M73509 | 596-308* | LG 548 |
| M73509 | 96-308* | LG 456 |
| M73548 | 55-804-1 | LG 994 |
| M73550 | 55-807 | LG 994 |
| M74175 | 91-394 | LG 489 |
| M74285 | 30-938 | LG 202 |
| M74449 | 396-709* | LG 489 |
| M74449 | 596-309* | LG 489 |
| M74449 | 92-109 | LG 489 |
| M74449 | 96-309* | LG 488 |
| M74747 | 75-672 | LG 294 |
| M75026 | 55-243 | LG 215 |
| M75049 | 43-509 | LG 936 |
| M75144 | 30-025 | LG 208 |
| M76076 | 30-018 | LG 198 |
| M76077 | 30-018 | LG 198 |
| M76461 | 396-738* | LG 485 |
| M76466 | 91-381 | LG 483 |
| M76466 | 91-401 | LG 483 |
| M76466 | 91-447 | LG 538 |
| M76466 | 96-618* | LG 483 |
| M76467 | 396-706* | LG 538 |
| M76467 | 596-306* | LG 487 |
| M76467 | 91-404 | LG 487 |
| M76467 | 96-306* | LG 538 |
| M77178 | 91-443 | LG 489 |
| M77534 | 45-220 | LG 232 |
| M77555 | 30-939 | LG 202 |
| M77988 | 115-206 | LG 294 |
| M77988 | 75-248 | LG 294 |
| M77988 | 75-295 | LG 295 |
| M77988 | 75-974 | LG 294 |
| M79340 | 07-314 | LG 773 |
| M79451 | 30-309 | LG 199 |
| M79451 | 30-814 | LG 199 |
| M79474 | 31-904 | LG 930 |
| M79475 | 31-904 | LG 930 |
| M802471 | 33-253 | LG 731 |
| M80373 | 06-004 | LG 805 |
| M806418 | 83-301 | LG 816 |
| M80783 | 396-775* | LG 493 |
| M80783 | 596-775* | LG 493 |
| M80783 | 91-395 | LG 493 |
| M81575 | 02-404 | LG 790 |
| M82263 | 91-395 | LG 493 |
| M82408 | 191-392 | LG 488 |
| M82408 | 396-709* | LG 489 |
| M82408 | 596-309* | LG 489 |

X

* OREGON® Gator™ replacement blade

# 2019 OEM X-Reference

## JOHN DEERE

| OEM No. | OREGON | Page |
|---|---|---|
| M82408 | 92-109 | LG 489 |
| M82408 | 96-309* | LG 488 |
| M82462 | 115-206 | LG 294 |
| M82462 | 175-248 | LG 294 |
| M82462 | 75-248 | LG 294 |
| M82462 | 75-974 | LG 294 |
| M82734 | 115-206 | LG 294 |
| M82734 | 75-248 | LG 294 |
| M83184 | 43-012 | LG 927 |
| M83339 | 30-132 | LG 179 |
| M83363 | 91-395 | LG 493 |
| M83459 | 396-352* | LG 489 |
| M83459 | 91-398 | LG 488 |
| M83459 | 91-400 | LG 488 |
| M83459 | 92-109 | LG 489 |
| M83541 | 48-320 | LG 238 |
| M83646 | 30-098 | LG 206 |
| M83681 | 30-947 | LG 207 |
| M84075 | 75-360 | LG 294 |
| M84472 | 396-709* | LG 489 |
| M84472 | 596-309* | LG 489 |
| M84472 | 91-400 | LG 488 |
| M84472 | 92-109 | LG 489 |
| M84472 | 96-309* | LG 488 |
| M84690 | 72-094 | LG 1042 |
| M85178 | 09-804 | LG 233 |
| M86209 | 396-738* | LG 485 |
| M86209 | 91-393 | LG 485 |
| M87622 | 396-734* | LG 489 |
| M87622 | 596-734* | LG 489 |
| M87622 | 91-394 | LG 489 |
| M88184 | 75-974 | LG 294 |
| M88251 | 45-227 | LG 234 |
| M88571 | 30-935 | LG 201 |
| M89327 | 75-973 | LG 294 |
| M89454 | 91-399 | LG 493 |
| M89455 | 91-399 | LG 493 |
| M89456 | 91-399 | LG 493 |
| M89832 | 75-360 | LG 294 |
| M90206 | 33-350 | LG 949 |
| M90989 | 72-725 | LG 1044 |
| M92359 | 30-085 | LG 203 |
| M92359 | 30-815 | LG 203 |
| M92360 | 30-942 | LG 206 |
| M92547 | 30-413 | LG 221 |
| M92810 | 91-443 | LG 489 |
| M93586 | 31-908 | LG 929 |
| M94511 | 73-022 | LG 847 |
| M96847 | 30-037 | LG 199 |
| M97211 | 30-311 | LG 199 |
| M97211 | 30-804 | LG 199 |
| M97211 | 69-031 | LG 199 |
| M97266 | 30-304 | LG 199 |
| M97348 | 33-246 | LG 732 |
| M97348 | 33-407 | LG 732 |
| MIA11067 | 33-342 | LG 784 |
| MIU10778 | 30-018 | LG 198 |
| MIU11286 | 30-139 | LG 183 |
| MIU11376 | 30-321 | LG 199 |
| MIU11377 | 30-037 | LG 199 |
| MIU11377 | 30-935 | LG 201 |
| MIU11747 | 30-157 | LG 201 |
| MIU11748 | 30-158 | LG 201 |
| MIU12514 | 33-402 | LG 731 |
| N49746 | 30-100 | LG 217 |
| N49746 | 30-841 | LG 217 |
| P20351 | 02-195 | LG 676 |
| P20352H | 02-182 | LG 676 |
| P28535 | 02-191 | LG 676 |
| P28536 | 02-178 | LG 676 |
| P33541 | 02-190 | LG 676 |
| P33542 | 02-177 | LG 676 |
| PT10268 | 49-816 | LG 612 |
| PT10269 | 49-812 | LG 612 |
| PT10281 | 55-227 | LG 191 |
| PT10615 | 31-907 | LG 929 |
| PT10998 | 33-340 | LG 784 |
| PT11016 | 43-100 | LG 932 |
| PT11025 | 30-700 | LG 180 |
| PT11025 | 30-813 | LG 180 |
| PT11028 | 07-304 | LG 770 |
| PT11041 | 49-036 | LG 628 |
| PT11047 | 33-342 | LG 784 |
| PT11136 | 396-735* | LG 452 |
| PT11136 | 596-308* | LG 548 |
| PT11136 | 96-308* | LG 456 |
| PT11558 | 49-832 | LG 611 |
| PT11560 | 49-835 | LG 611 |
| PT11561 | 49-835 | LG 611 |
| PT11575 | 49-816 | LG 612 |
| PT11576 | 49-816 | LG 612 |
| PT11577 | 49-832 | LG 611 |
| PT11578 | 49-816 | LG 612 |
| PT11579 | 49-834 | LG 611 |
| PT11580 | 49-816 | LG 612 |
| PT11581 | 49-812 | LG 612 |
| PT11583 | 49-810 | LG 612 |
| PT11584 | 49-812 | LG 612 |
| PT11584 | 49-816 | LG 612 |
| PT11632 | 75-222 | LG 252 |
| PT11632 | 75-223 | LG 269 |
| PT12362 | 07-207 | LG 779 |
| PT12668 | 75-222 | LG 252 |
| PT12668 | 75-223 | LG 269 |
| PT13193 | 49-816 | LG 612 |
| PT13767 | 43-404 | LG 928 |
| PT14764 | 92-011 | LG 490 |
| PT14765 | 92-011 | LG 490 |
| PT15339 | 33-344 | LG 784 |
| PT15396 | 49-020 | LG 631 |
| PT1581 | 49-812 | LG 612 |
| PT15853 | 30-700 | LG 180 |
| PT15853 | 30-710 | LG 181 |
| PT15853 | 30-813 | LG 180 |
| PT15867 | 49-067 | LG 748 |
| PT15868 | 07-307 | LG 770 |
| PT2254 | 73-008 | LG 848 |
| PT2516 | 49-021 | LG 629 |
| PT2637 | 31-100 | LG 929 |
| PT3722 | 49-816 | LG 612 |
| PT3723 | 49-832 | LG 611 |
| PT3724 | 49-834 | LG 611 |
| PT3725 | 49-812 | LG 612 |
| PT3726 | 49-806 | LG 611 |
| PT3727 | 49-810 | LG 612 |
| PT4192 | 80-037 | LG 727 |
| PT4228 | 02-861 | LG 766 |
| PT4250 | 30-920 | LG 186 |
| PT4265 | 07-101 | LG 775 |
| PT4268 | 33-601 | LG 789 |
| PT4336 | 35-012 | LG 806 |
| PT4337 | 07-001 | LG 765 |
| PT6511 | 07-206 | LG 776 |
| PT6683 | 56-004 | LG 686 |
| PT7102 | 30-950 | LG 209 |
| PT7132 | 92-011 | LG 490 |
| PT7184 | 50-502 | LG 756 |
| PT7211 | 02-407 | LG 790 |
| PT7245 | 49-033 | LG 628 |
| PT7610 | 07-206 | LG 776 |
| PT7946 | 30-923 | LG 186 |
| PT7953 | 30-094 | LG 180 |
| PT8376 | 30-931 | LG 191 |
| PT8633 | 82-308 | LG 874 |
| PT8649 | 78-031 | LG 826 |
| PT8655 | 07-400 | LG 767 |
| PT8663 | 48-200 | LG 694 |
| PT8666 | 75-222 | LG 252 |
| PT8666 | 75-223 | LG 269 |
| PT8670 | 48-205 | LG 694 |
| PT8675 | 75-221 | LG 280 |
| PT8676 | 75-223 | LG 269 |
| PT8698 | 75-223 | LG 269 |
| PT8721 | 396-726* | LG 391 |
| PT8721 | 596-344* | LG 495 |
| PT8721 | 91-335 | LG 420 |
| PT8721 | 96-344* | LG 536 |
| PT8755 | 78-644 | LG 835 |
| PT8778 | 78-646 | LG 841 |
| PT8886 | 09-801 | LG 229 |
| PT8888 | 09-802 | LG 233 |
| PT8891 | 45-242 | LG 243 |
| PT8892 | 48-211 | LG 233 |
| PT8894 | 45-010 | LG 238 |
| PT8930 | 55-822 | LG 1027 |
| PT8933 | 82-308 | LG 874 |
| PT9334 | 30-044 | LG 179 |
| PT9498 | 55-120 | LG 770 |
| PT9567 | 33-346 | LG 786 |
| SS33-3777 | 33-377 | LG 943 |
| SW07716 | 15-243 | LG 267 |
| SW07717 | 15-244 | LG 267 |
| SW35COUS | 02-188 | LG 676 |
| SW41COUS | 02-191 | LG 676 |
| SW41OLUS | 02-178 | LG 676 |
| SW50COUS | 02-195 | LG 676 |
| SWP1001513KT | 91-584 | LG 578 |
| TCA15075 | 33-377 | LG 943 |
| TCA22740 | 33-377 | LG 943 |
| TCU13195 | 15-009 | LG 296 |
| TCU13198 | 15-010 | LG 296 |
| TCU14939 | 396-770* | LG 485 |
| TCU15881 | 396-730* | LG 490 |
| TCU15881 | 596-730* | LG 490 |
| TCU15881 | 92-113 | LG 490 |
| TCU15882 | 396-743* | LG 493 |
| TCU15882 | 596-743* | LG 493 |
| TCU15882 | 92-114 | LG 493 |
| TCU16036 | 15-038 | LG 296 |
| TCU16092 | 15-507 | LG 296 |
| TCU16495 | 15-039 | LG 296 |
| TCU16841 | 15-508 | LG 296 |
| TCU16907 | 15-009 | LG 296 |
| TCU18678 | 396-770* | LG 485 |
| TCU18744 | 72-032 | LG 1038 |
| TCU18990 | 396-730* | LG 490 |
| TCU18990 | 596-730* | LG 490 |
| TCU19408 | 15-009 | LG 296 |
| TCU19900 | 15-038 | LG 296 |
| TCU20002 | 15-040 | LG 296 |
| TCU21475 | 396-770* | LG 485 |
| TCU25673 | 15-041 | LG 297 |
| TCU26297 | 15-042 | LG 297 |
| TCU27401 | 391-595* | LG 493 |
| TCU27876 | 391-595* | LG 493 |
| TCU28433 | 15-041 | LG 297 |
| TCU29188 | 396-726* | LG 391 |
| TCU29188 | 596-344* | LG 495 |
| TCU29188 | 91-235 | LG 461 |
| TCU29188 | 96-344* | LG 536 |
| TCU29254 | 15-042 | LG 297 |
| TCU29299 | 396-735* | LG 452 |
| TCU29299 | 596-308* | LG 548 |
| TCU29299 | 92-207 | LG 456 |
| TCU29299 | 96-308* | LG 456 |
| TCU29869 | 396-726* | LG 391 |
| TCU29869 | 596-344* | LG 495 |
| TCU29869 | 96-344* | LG 536 |
| TCU30315 | 396-770* | LG 485 |
| TCU30316 | 396-769* | LG 488 |
| TCU30316 | 596-769* | LG 488 |
| TCU30316 | 91-138 | LG 488 |
| TCU30316 | 96-364* | LG 488 |
| TCU30317 | 396-769* | LG 488 |
| TCU30317 | 596-769* | LG 488 |
| TCU30317 | 92-118 | LG 488 |
| TCU30317 | 96-364* | LG 488 |
| TCU34166 | 392-165* | LG 580 |
| TCU34166 | 92-165 | LG 580 |
| TCU34280 | 393-601* | LG 582 |
| TCU34280 | 593-601* | LG 386 |
| TCU34280 | 91-039 | LG 487 |
| TCU34280 | 93-601* | LG 432 |
| TCU34281 | 396-702* | LG 480 |
| TCU34281 | 596-702* | LG 388 |
| TCU34281 | 91-135 | LG 387 |
| TCU34281 | 96-702* | LG 491 |
| TCU35392 | 396-735* | LG 452 |
| TCU35392 | 596-308* | LG 548 |
| TCU35392 | 92-743 | LG 418 |
| TCU35392 | 96-308* | LG 456 |
| TCU35393 | 396-726* | LG 391 |
| TCU35393 | 596-344* | LG 495 |
| TCU35393 | 91-335 | LG 420 |
| TCU35393 | 96-344* | LG 536 |
| TCU35394 | 396-702* | LG 480 |
| TCU35394 | 596-702* | LG 388 |
| TCU35394 | 91-596 | LG 446 |
| TCU35394 | 96-702* | LG 491 |
| TCU36515 | 396-727* | LG 467 |
| TCU36515 | 596-347* | LG 448 |
| TCU36515 | 96-347* | LG 387 |
| TCU37208 | 396-726* | LG 391 |
| TCU37208 | 596-344* | LG 495 |
| TCU37208 | 91-622 | LG 536 |
| TCU37208 | 96-344* | LG 536 |
| TCU37209 | 396-735* | LG 452 |
| TCU37209 | 596-308* | LG 548 |
| TCU37209 | 91-620 | LG 470 |
| TCU37209 | 96-308* | LG 456 |
| TCU51118 | 396-710* | LG 492 |
| TCU51118 | 596-722* | LG 492 |
| TCU51118 | 92-120 | LG 492 |
| TY22462 | 02-700 | LG 765 |
| TY22465 | 02-701 | LG 765 |
| UP03697 | 07-100 | LG 774 |
| UP03697 | 07-102 | LG 774 |
| VG11696 | 73-564-0 | LG 843 |

## JONSERED

| OEM No. | OREGON | Page |
|---|---|---|
| 501520401 | 43-540 | LG 936 |

## K & S TRIM ALL

| OEM No. | OREGON | Page |
|---|---|---|
| 3999 | 45-019 | LG 239 |
| 706-16274 | 45-620 | LG 225 |
| 706-16835 | 55-800 | LG 934 |
| 706-18796 | 45-019 | LG 239 |
| T16276 | 45-019 | LG 239 |

## KAWASAKI

| OEM No. | OREGON | Page |
|---|---|---|
| 11013-1214 | 30-304 | LG 199 |
| 11013-2010 | 30-456 | LG 201 |
| 11013-2020 | 30-935 | LG 201 |
| 11013-2021 | 30-303 | LG 198 |
| 11013-2021 | 30-810 | LG 198 |
| 11013-2021 | 69-032 | LG 198 |
| 11013-2092 | 30-936 | LG 202 |
| 11013-2093 | 30-305 | LG 198 |
| 11013-2097 | 30-937 | LG 202 |
| 11013-2098 | 30-304 | LG 199 |
| 11013-2109 | 30-938 | LG 202 |
| 11013-2110 | 30-311 | LG 199 |
| 11013-2110 | 30-804 | LG 199 |
| 11013-2110 | 69-031 | LG 199 |
| 11013-2114 | 30-018 | LG 198 |
| 11013-2114 | 30-329 | LG 202 |
| 11013-2115 | 30-018 | LG 198 |
| 11013-2118 | 30-309 | LG 199 |
| 11013-2119 | 30-939 | LG 202 |

X



* OREGON® Gator™ replacement blade

## KAWASAKI

| OEM No. | OREGON | Page |
|---|---|---|
| 11013-2120 | 30-309 | LG 199 |
| 11013-2120 | 30-814 | LG 199 |
| 11013-2132 | 30-325 | LG 199 |
| 11013-2134 | 30-457 | LG 202 |
| 11013-2135 | 30-037 | LG 199 |
| 11013-2139 | 30-321 | LG 199 |
| 11013-2140 | 30-938 | LG 202 |
| 11013-2141 | 30-311 | LG 199 |
| 11013-2141 | 30-804 | LG 199 |
| 11013-2141 | 69-031 | LG 199 |
| 11013-2142 | 30-937 | LG 202 |
| 11013-2143 | 30-304 | LG 199 |
| 11013-2146 | 30-037 | LG 199 |
| 11013-2174 | 30-939 | LG 202 |
| 11013-2175 | 30-309 | LG 199 |
| 11013-2175 | 30-814 | LG 199 |
| 11013-2186 | 30-327 | LG 199 |
| 11013-2195 | 30-327 | LG 199 |
| 11013-2204 | 30-321 | LG 199 |
| 11013-2205 | 30-018 | LG 198 |
| 11013-2206 | 30-037 | LG 199 |
| 11013-2213 | 30-327 | LG 199 |
| 11013-7001 | 30-940 | LG 202 |
| 11013-7002 | 30-322 | LG 200 |
| 11013-7002 | 30-835 | LG 200 |
| 11013-7002 | 69-322 | LG 200 |
| 11013-7003 | 30-527 | LG 202 |
| 11013-7005 | 30-054 | LG 200 |
| 11013-7005 | 30-163 | LG 200 |
| 11013-7006 | 30-328 | LG 200 |
| 11013-7009 | 30-527 | LG 202 |
| 11013-7010 | 30-054 | LG 200 |
| 11013-7010 | 30-163 | LG 200 |
| 11013-7010 | 30-833 | LG 200 |
| 11013-7016 | 30-921 | LG 202 |
| 11013-7017 | 30-057 | LG 200 |
| 11013-7018 | 30-441 | LG 202 |
| 11013-7019 | 30-056 | LG 208 |
| 11013-7020 | 30-055 | LG 204 |
| 11013-7024 | 30-054 | LG 200 |
| 11013-7024 | 30-163 | LG 200 |
| 11013-7024 | 30-833 | LG 200 |
| 11013-7025 | 30-966 | LG 203 |
| 11013-7026 | 30-705 | LG 200 |
| 11013-7027 | 30-163 | LG 200 |
| 11013-7031 | 30-705 | LG 200 |
| 11013-7032 | 30-441 | LG 202 |
| 11013-7033 | 30-940 | LG 202 |
| 11013-7034 | 30-921 | LG 202 |
| 11013-7038 | 30-157 | LG 201 |
| 11013-7039 | 30-158 | LG 201 |
| 11013-7041 | 30-185 | LG 203 |
| 11013-7044 | 30-157 | LG 201 |
| 11013-7045 | 30-056 | LG 208 |
| 11013-7045 | 30-158 | LG 201 |
| 11013-7046 | 30-185 | LG 203 |
| 11013-7049 | 30-164 | LG 200 |
| 11013-7052 | 30-164 | LG 200 |
| 11029-0017 | 30-706 | LG 201 |
| 11029-2001 | 30-018 | LG 198 |
| 11029-2002 | 30-309 | LG 199 |
| 11029-2005 | 30-321 | LG 199 |
| 11029-2010 | 30-309 | LG 199 |
| 11029-2017 | 30-018 | LG 198 |
| 11029-7001 | 30-054 | LG 200 |
| 11029-7001 | 30-833 | LG 200 |
| 11029-7002 | 30-054 | LG 200 |
| 11029-7002 | 30-833 | LG 200 |
| 11029-7010 | 30-706 | LG 201 |
| 11029-7012 | 30-054 | LG 200 |
| 11029-7012 | 30-833 | LG 200 |
| 11029-7016 | 30-706 | LG 201 |
| 11029-7021 | 30-706 | LG 201 |
| 14043-2051 | 55-342 | LG 627 |
| 14069-2056 | 55-018 | LG 771 |
| 15852-11082 | 30-019 | LG 208 |
| 16030-2022 | 49-021 | LG 629 |
| 20010-72221 | 33-516 | LG 866 |
| 210662056 | 33-246 | LG 732 |
| 210662056 | 33-407 | LG 732 |
| 21066-2056 | 33-246 | LG 732 |
| 21066-2056 | 33-407 | LG 732 |
| 210662070 | 33-246 | LG 732 |
| 210662070 | 33-407 | LG 732 |
| 21066-2070 | 33-246 | LG 732 |
| 21066-2070 | 33-407 | LG 732 |
| 21130-2056 | 33-516 | LG 866 |
| 21163-0727 | 33-795 | LG 917 |
| 21163-0749 | 33-795 | LG 917 |
| 21163-2073 | 33-728 | LG 917 |
| 21163-2073A | 33-728 | LG 917 |
| 21163-2101 | 33-729 | LG 917 |
| 21163-2132 | 33-729 | LG 917 |
| 21163-2138 | 33-728 | LG 917 |
| 211632147 | 33-729 | LG 917 |
| 21163-2147 | 33-729 | LG 917 |
| 21163-7001 | 33-730 | LG 917 |
| 21163-7002 | 33-743 | LG 918 |
| 21163-7003 | 33-744 | LG 918 |
| 21163-7007 | 33-793 | LG 918 |
| 21163-7010 | 33-730 | LG 917 |
| 21163-7014 | 33-743 | LG 918 |
| 21163-7022 | 33-730 | LG 917 |
| 21163-7023 | 33-794 | LG 918 |
| 21163-7025 | 33-792 | LG 918 |
| 21163-7026 | 33-743 | LG 918 |
| 21163-7029 | 33-730 | LG 917 |
| 21163-7029 | 33-793 | LG 918 |
| 21163-7031 | 33-793 | LG 918 |
| 310101-6441A | 55-017 | LG 772 |
| 310101-6441B | 55-017 | LG 772 |
| 310301-6660A | 55-119 | LG 764 |
| 310370-6122A | 49-021 | LG 629 |
| 310370-6168A | 55-342 | LG 627 |
| 310401-3441A | 55-158 | LG 934 |
| 310501-3431A | 31-071 | LG 923 |
| 310850-6680A | 55-092 | LG 768 |
| 311409-6646B | 55-018 | LG 771 |
| 311509-3552-00 | 55-092 | LG 768 |
| 3119AA-8418D | 33-516 | LG 866 |
| 3144-AA-1312A | 30-313 | LG 201 |
| 49019-0014 | 07-063 | LG 775 |
| 49019-0014 | 07-122 | LG 775 |
| 49019-0707 | 07-063 | LG 775 |
| 49019-0707 | 07-122 | LG 775 |
| 49019-1055 | 07-062 | LG 775 |
| 49019-2065 | 55-119 | LG 764 |
| 49019-7001 | 07-063 | LG 775 |
| 49019-7001 | 07-122 | LG 775 |
| 49019-7005 | 07-063 | LG 775 |
| 49019-7005 | 07-122 | LG 775 |
| 49043-2058 | 55-092 | LG 768 |
| 49043-2065 | 55-118 | LG 630 |
| 49049-2057 | 55-092 | LG 768 |
| 49049-2089 | 55-092 | LG 768 |
| 49064-2059 | 30-313 | LG 201 |
| 49065-2001 | 83-282 | LG 817 |
| 49065-2001 | 83-402 | LG 817 |
| 49065-2057 | 69-282 | LG 817 |
| 49065-2057 | 83-282 | LG 817 |
| 49065-2057 | 83-402 | LG 817 |
| 49065-2061 | 83-282 | LG 817 |
| 49065-2061 | 83-402 | LG 817 |
| 49065-2062 | 83-282 | LG 817 |
| 49065-2062 | 83-402 | LG 817 |
| 49065-2070 | 69-282 | LG 817 |
| 49065-2070 | 83-282 | LG 817 |
| 49065-2070 | 83-402 | LG 817 |
| 49065-2071 | 69-282 | LG 817 |
| 49065-2071 | 83-282 | LG 817 |
| 49065-2071 | 83-402 | LG 817 |
| 49065-2074 | 83-282 | LG 817 |
| 49065-2074 | 83-402 | LG 817 |
| 49065-2074 | 83-502 | LG 817 |
| 49065-2078 | 83-282 | LG 817 |
| 49065-2078 | 83-402 | LG 817 |
| 49065-7007 | 83-013 | LG 817 |
| 49065-7007S | 83-013 | LG 817 |
| 49065-7010 | 83-282 | LG 817 |
| 49065-7010 | 83-402 | LG 817 |
| 49088-2166 | 31-071 | LG 923 |
| 49088-2473-9H | 43-417 | LG 936 |
| 49088-2473-YK | 43-417 | LG 936 |
| 49116-2064 | 55-018 | LG 771 |
| 51049-2057 | 55-017 | LG 772 |
| 51049-2091 | 55-017 | LG 772 |
| 59074-2053 | 40-141 | LG 585 |
| 59074-2053A | 40-141 | LG 585 |
| 59101-2067 | 55-158 | LG 934 |
| 59101-2103 | 31-014 | LG 934 |
| 59101-2110 | 31-014 | LG 934 |
| 59101-7001 | 31-115 | LG 934 |
| 92145-2090 | 43-417 | LG 936 |
| 92145-7008 | 31-114 | LG 936 |
| 92-145-7008 | 31-114 | LG 936 |
| 92145-7063 | 43-417 | LG 936 |
| 99969-1829 | 21-095 | LG 981 |
| 999997080 | 33-730 | LG 917 |
| 99999-7080 | 33-730 | LG 917 |
| 99999-7080 | 33-793 | LG 918 |

## KEES

| OEM No. | OREGON | Page |
|---|---|---|
| 100026 | 75-269 | LG 252 |
| 100340 | 396-716* | LG 451 |
| 100340 | 596-310* | LG 447 |
| 100340 | 96-310* | LG 444 |
| 100340 | 99-127 | LG 375 |
| 100341 | 396-726* | LG 391 |
| 100341 | 596-344* | LG 495 |
| 100341 | 91-256 | LG 437 |
| 100341 | 96-344* | LG 536 |
| 101080 | 33-026 | LG 947 |
| 101080 | 33-028 | LG 947 |
| 101164 | 83-010 | LG 819 |
| 101164 | 83-400 | LG 819 |
| 101366 | 396-716* | LG 451 |
| 101366 | 596-310* | LG 447 |
| 101366 | 96-310* | LG 444 |
| 101366 | 99-127 | LG 375 |
| 101485 | 396-726* | LG 391 |
| 101485 | 596-344* | LG 495 |
| 101485 | 91-256 | LG 437 |
| 101485 | 96-344* | LG 536 |
| 101733 | 396-727* | LG 467 |
| 101733 | 596-347* | LG 448 |
| 101733 | 91-308 | LG 467 |
| 101733 | 96-347* | LG 387 |
| 102424 | 33-002 | LG 946 |
| 102603 | 33-115 | LG 738 |
| 102606 | 83-010 | LG 819 |
| 103030 | 60-408 | LG 700 |
| 104335 | 75-687 | LG 297 |
| 104336 | 75-688 | LG 297 |
| 362024 | 82-306 | LG 874 |
| 362095 | 78-640 | LG 835 |
| 362096 | 78-641 | LG 835 |
| 362101 | 48-205 | LG 694 |
| 363033 | 09-802 | LG 233 |
| 363039 | 43-075 | |
| 363055 | 396-726* | LG 391 |
| 363055 | 596-344* | LG 495 |
| 363055 | 91-181 | LG 495 |
| 363055 | 96-344* | LG 536 |
| 363143 | 75-036 | LG 297 |
| 363144 | 75-221 | LG 280 |
| 363145 | 75-240 | LG 297 |
| 363150 | 34-023 | LG 822 |
| 363150 | 34-024 | LG 822 |
| 363161 | 48-211 | LG 233 |
| 363173 | 45-220 | LG 232 |
| 363194 | 45-127 | LG 244 |
| 363199 | 45-078 | LG 230 |
| 363214 | 78-031 | LG 826 |
| 363312 | 83-282 | LG 817 |
| 363312 | 83-402 | LG 817 |
| 363333 | 07-100 | LG 774 |
| 393194 | 45-030 | LG 245 |
| 430409 | 33-027 | LG 947 |
| 482005 | 82-307-0 | LG 874 |
| 483011 | 396-716* | LG 451 |
| 483011 | 596-310* | LG 447 |
| 483011 | 91-180 | LG 460 |
| 483011 | 96-310* | LG 444 |
| 483013 | 75-058 | LG 255 |
| 483036 | 34-007 | LG 826 |
| 483036 | 34-024 | LG 822 |
| 483036 | 78-021 | LG 832 |
| 539105476 | 396-731* | LG 427 |
| 539112078 | 595-088* | LG 458 |
| 539112078 | 95-084 | LG 494 |
| 539112078 | 95-088* | LG 458 |
| 539113312 | 596-900* | LG 380 |
| 539113312 | 95-086 | LG 425 |
| 539113312 | 96-900* | LG 526 |
| 539113425 | 595-087* | LG 417 |
| 539113425 | 95-087 | LG 460 |
| 72303 | 396-731* | LG 427 |
| 923408 | 33-027 | LG 947 |

## KENDA

| OEM No. | OREGON | Page |
|---|---|---|
| 18X750-8 | 68-214 | LG 962 |
| 410/350-4 | 68-213 | LG 962 |

## KING KUTTER

| OEM No. | OREGON | Page |
|---|---|---|
| 167133 | 15-512 | LG 298 |
| 167148 | 15-513 | LG 298 |
| 167149 | 15-514 | LG 298 |
| 167163 | 15-515 | LG 298 |
| 168020 | 72-738 | LG 1045 |
| 190320 | 91-452 | LG 497 |
| 190324 | 91-453 | LG 497 |
| 190424 | 91-453 | LG 497 |
| 502320 | 91-452 | LG 497 |
| 502324 | 91-453 | LG 497 |

## KING-O-LAWN

| OEM No. | OREGON | Page |
|---|---|---|
| 1097 | 40-110 | LG 584 |
| 7192 | 45-257 | LG 245 |

## KIRBY, BLOCK DIST. CO

| OEM No. | OREGON | Page |
|---|---|---|
| 754-0145 | 75-145 | LG 300 |
| 754-0178 | 75-179 | LG 310 |
| 754-0935 | 75-092 | LG 304 |
| 954-0145 | 75-145 | LG 300 |
| 954-0145A | 75-145 | LG 300 |
| 954-015A | 75-145 | LG 300 |
| 954-0178 | 75-179 | LG 310 |
| 954-0935 | 75-092 | LG 304 |

## K-MART

| OEM No. | OREGON | Page |
|---|---|---|
| 754-0240 | 75-009 | LG 301 |
| 754-0241 | 75-012 | LG 301 |
| 954-0240 | 75-009 | LG 301 |
| 954-0241 | 75-012 | LG 301 |
| 954-0241A | 75-012 | LG 301 |



* OREGON® Gator™ replacement blade

# 2019 OEM X-Reference

| OEM No. | OREGON | Page |
|---|---|---|
| **KOHLER** | | |
| 12 050 01 | 83-284 | LG 818 |
| 12 050 01 | 83-404 | LG 818 |
| 12 050 01 S1 | 83-284 | LG 818 |
| 12 050 01S | 83-284 | LG 818 |
| 12 050 01-S | 83-284 | LG 818 |
| 12 050 01-S | 83-404 | LG 818 |
| 12 050 08 | 83-284 | LG 818 |
| 12 050 08-S | 83-284 | LG 818 |
| 12 083 01 | 30-942 | LG 206 |
| 12 083 03 | 30-085 | LG 203 |
| 12 083 04 | 30-085 | LG 203 |
| 12 083 04 | 30-815 | LG 203 |
| 12 083 05 | 30-085 | LG 203 |
| 12 083 05 | 30-815 | LG 203 |
| 12 083 05-S | 30-085 | LG 203 |
| 12 083 05-S | 30-815 | LG 203 |
| 12 083 05-S1 | 30-085 | LG 203 |
| 12 083 05-S1 | 30-815 | LG 203 |
| 12 083 08 | 30-942 | LG 206 |
| 12 083 08-S | 30-942 | LG 206 |
| 12 083 08-S1 | 30-942 | LG 206 |
| 12 083 10 | 30-088 | LG 203 |
| 12 083 10-S | 30-088 | LG 203 |
| 12 083 10-S1 | 30-088 | LG 203 |
| 12 083 10-S1 | 30-834 | LG 203 |
| 12 083 12 | 30-943 | LG 206 |
| 12 083 12-S | 30-943 | LG 206 |
| 12 083 12-S1 | 30-943 | LG 206 |
| 12 083 14 | 30-085 | LG 203 |
| 12 083 14 | 30-815 | LG 203 |
| 12 083 16 | 30-088 | LG 203 |
| 12 089 06 | 43-018 | LG 936 |
| 12 089 06-S | 43-018 | LG 936 |
| 12 098 03-S | 33-710 | LG 918 |
| 12 098 03-S | 33-714 | LG 918 |
| 12 098 05 | 33-715 | LG 919 |
| 12 098 08 | 33-715 | LG 919 |
| 12 098 08-S | 33-715 | LG 919 |
| 12 098 09 | 33-710 | LG 918 |
| 12 098 10 | 33-722 | LG 918 |
| 12 098 12 | 33-710 | LG 918 |
| 12 098 12S | 33-710 | LG 918 |
| 12 098 12-S | 33-710 | LG 918 |
| 12 098 12-S | 33-715 | LG 919 |
| 12 098 13 | 33-715 | LG 919 |
| 12 098 13S | 33-715 | LG 919 |
| 12 098 13-S | 33-715 | LG 919 |
| 12 098 14S | 33-710 | LG 918 |
| 12 098 14-S | 33-710 | LG 918 |
| 12 098 15 | 33-715 | LG 919 |
| 12 098 15S | 33-715 | LG 919 |
| 12 098 15-S | 33-715 | LG 919 |
| 12 098 17-S | 33-722 | LG 918 |
| 12 098 19 | 33-710 | LG 918 |
| 12 098 19S | 33-710 | LG 918 |
| 12 098 19-S | 33-710 | LG 918 |
| 12 098 20 | 33-715 | LG 919 |
| 12 098 20S | 33-715 | LG 919 |
| 12 098 20-S | 33-715 | LG 919 |
| 12 098 21S | 33-710 | LG 918 |
| 12 098 21-S | 33-710 | LG 918 |
| 12 098 22 | 33-715 | LG 919 |
| 12 098 22S | 33-715 | LG 919 |
| 12 098 22-S | 33-715 | LG 919 |
| 12 403 01 | 33-419 | LG 732 |
| 12 403 01 S | 33-419 | LG 732 |
| 12 403 01-S | 33-419 | LG 732 |
| 12 757 06 | 43-019 | LG 931 |
| 12 757 06-S | 43-019 | LG 931 |
| 12 883 05-S1 | 30-085 | LG 203 |
| 12 883 05-S1 | 30-815 | LG 203 |
| 12 883 10-S1 | 30-834 | LG 203 |
| 1205001 | 83-284 | LG 818 |
| 12-050-01 | 83-284 | LG 818 |
| 12-050-01 | 83-404 | LG 818 |
| 12-050-01S | 83-284 | LG 818 |
| 12-050-01-S | 83-284 | LG 818 |
| 12-050-01-S | 83-404 | LG 818 |
| 12-083-01 | 30-942 | LG 206 |
| 12-083-04 | 30-815 | LG 203 |
| 12-083-05 | 30-085 | LG 203 |
| 12-083-05 | 30-815 | LG 203 |
| 1208305S | 30-085 | LG 203 |
| 12-083-05-S | 30-815 | LG 203 |
| 12-083-05-S1 | 30-085 | LG 203 |
| 12-083-05-S1 | 30-815 | LG 203 |
| 12-083-08 | 30-942 | LG 206 |
| 1208308S | 30-942 | LG 206 |
| 12-083-08-S | 30-942 | LG 206 |
| 12-083-10 | 30-088 | LG 203 |
| 12-083-10-S | 30-088 | LG 203 |
| 12-083-10-S1 | 30-088 | LG 203 |
| 12-083-10-S1 | 30-834 | LG 203 |
| 12-083-12 | 30-943 | LG 206 |
| 12-083-12-S | 30-943 | LG 206 |
| 12-083-12-S1 | 30-943 | LG 206 |
| 12-083-14 | 30-815 | LG 203 |
| 12-083-16 | 30-088 | LG 203 |
| 12-098-03 | 33-714 | LG 918 |
| 12-098-03S | 33-714 | LG 918 |
| 12-098-03-S | 33-714 | LG 918 |
| 12-098-07 | 33-710 | LG 918 |
| 12-098-08 | 33-715 | LG 919 |
| 12-098-08-S | 33-715 | LG 919 |
| 12-098-09 | 33-710 | LG 918 |
| 12-098-10 | 33-722 | LG 918 |
| 12-098-10-S | 33-722 | LG 918 |
| 12-098-12 | 33-710 | LG 918 |
| 12-098-12S | 33-710 | LG 918 |
| 12-098-12-S | 33-710 | LG 918 |
| 12-098-13 | 33-715 | LG 919 |
| 12-098-13S | 33-715 | LG 919 |
| 12-098-13-S | 33-715 | LG 919 |
| 12-098-14S | 33-710 | LG 918 |
| 12-098-14-S | 33-710 | LG 918 |
| 12-098-15 | 33-715 | LG 919 |
| 12-098-15S | 33-715 | LG 919 |
| 12-098-15-S | 33-715 | LG 919 |
| 12-098-19 | 33-710 | LG 918 |
| 12-098-19S | 33-710 | LG 918 |
| 12-098-19-S | 33-710 | LG 918 |
| 1209819SSTARTER | 33-710 | LG 918 |
| 12-098-20 | 33-715 | LG 919 |
| 12-098-20S | 33-715 | LG 919 |
| 12-098-20-S | 33-715 | LG 919 |
| 1209820SSTARTER | 33-715 | LG 919 |
| 12-098-21S | 33-710 | LG 918 |
| 12-098-21-S | 33-710 | LG 918 |
| 1209821SSTARTER | 33-710 | LG 918 |
| 12-098-22 | 33-715 | LG 919 |
| 12-098-22S | 33-715 | LG 919 |
| 12-098-22-S | 33-715 | LG 919 |
| 1209822SSTARTER | 33-715 | LG 919 |
| 1209822SSTARTER12 | | 33-715 |
| LG 919 | | |
| 12-0985-22S | 33-715 | LG 919 |
| 1240301 | 33-419 | LG 732 |
| 12-403-01 | 33-419 | LG 732 |
| 1240301S | 33-419 | LG 732 |
| 12-883-05-S1 | 30-085 | LG 203 |
| 12-883-05-S1 | 30-815 | LG 203 |
| 12-883-10-S1 | 30-834 | LG 203 |
| 13 083 02 | 30-942 | LG 206 |
| 13 083 12-S1 | 30-943 | LG 206 |
| 14 050 04-S | 07-331 | LG 776 |
| 14 083 01-S | 30-165 | LG 204 |
| 14 083 01-S1 | 30-165 | LG 204 |
| 14 083 02-S | 30-190 | LG 207 |
| 14 083 04-S | 30-165 | LG 204 |
| 1408301S | 30-165 | LG 204 |
| 1408301S1 | 30-165 | LG 204 |
| 1408302S | 30-190 | LG 207 |
| 15852-11082 | 30-019 | LG 208 |
| 17 083 04-S | 30-188 | |
| 17 083 06-S | 30-189 | LG 207 |
| 17 083 07S | 30-188 | |
| 17 083 07-S | 30-188 | |
| 17 083 12S | 30-189 | LG 207 |
| 17 083 12-S | 30-189 | LG 207 |
| 1708307S | 30-188 | |
| 1708312S | 30-188 | |
| 20 083 04-S | 30-458 | LG 207 |
| 200443 | 49-401 | LG 605 |
| 210101 | 07-001 | LG 765 |
| 220521 | 35-008 | LG 808 |
| 220521S | 35-008 | LG 808 |
| 220521-S | 35-008 | LG 808 |
| 220521Z | 35-008 | LG 808 |
| 220701 | 49-401 | LG 605 |
| 220702 | 49-401 | LG 605 |
| 220980 | 33-628 | LG 789 |
| 230722 | 33-016 | LG 789 |
| 230722-S | 33-016 | LG 789 |
| 230840 | 30-081 | LG 205 |
| 230840-S | 30-081 | LG 205 |
| 230840-S1 | 30-081 | LG 205 |
| 231152 | 49-401 | LG 605 |
| 231281 | 33-333 | LG 786 |
| 231281S | 33-333 | LG 786 |
| 231281-S | 33-333 | LG 786 |
| 231323 | 33-333 | LG 786 |
| 231555 | 49-401 | LG 605 |
| 231558 | 49-401 | LG 605 |
| 231626 | 49-401 | LG 605 |
| 231847 | 30-082 | LG 205 |
| 231847 | 30-847 | LG 205 |
| 231847-S | 30-082 | LG 205 |
| 231847-S | 30-847 | LG 205 |
| 231847-S1 | 30-082 | LG 205 |
| 231847-S1 | 30-847 | LG 205 |
| 231848 | 33-333 | LG 786 |
| 232518 | 33-333 | LG 786 |
| 232546 | 33-333 | LG 786 |
| 232696 | 33-628 | LG 789 |
| 232845 | 33-333 | LG 786 |
| 234812 | 33-400 | LG 732 |
| 234869 | 30-125 | LG 206 |
| 234869-S | 30-125 | LG 206 |
| 234869-S1 | 30-125 | LG 206 |
| 235024 | 50-041 | LG 757 |
| 235116 | 30-080 | LG 205 |
| 235116 | 30-819 | LG 205 |
| 235116S | 30-080 | LG 205 |
| 235116-S | 30-080 | LG 205 |
| 235116-S | 30-819 | LG 205 |
| 235116-S1 | 30-080 | LG 205 |
| 235116-S1 | 30-819 | LG 205 |
| 235152 | 49-401 | LG 605 |
| 235810 | 50-041 | LG 757 |
| 235W6 | 30-080 | LG 205 |
| 236649 | 35-006 | LG 808 |
| 236705 | 50-041 | LG 757 |
| 237083 | 33-016 | LG 789 |
| 237131 | 33-704 | LG 919 |
| 237256S | 33-333 | LG 786 |
| 237306 | 50-041 | LG 757 |
| 237335 | 33-400 | LG 732 |
| 237421 | 30-941 | LG 219 |
| 237421S | 30-941 | LG 219 |
| 237421-S | 30-941 | LG 219 |
| 237421-S1 | 30-941 | LG 219 |
| 237511 | 33-704 | LG 919 |
| 237534 | 33-704 | LG 919 |
| 237564 | 33-704 | LG 919 |
| 237658 | 50-041 | LG 757 |
| 237658S | 50-041 | LG 757 |
| 24 050 02 | 07-063 | LG 775 |
| 24 050 02 | 07-111 | LG 776 |
| 24 050 02-S | 07-063 | LG 775 |
| 24 050 02-S | 07-111 | LG 776 |
| 24 050 02-S1 | 07-063 | LG 775 |
| 24 050 02-S1 | 07-111 | LG 776 |
| 24 050 05-S | 07-063 | LG 775 |
| 24 050 05-S | 07-111 | LG 776 |
| 24 050 09-S | 07-063 | LG 775 |
| 24 050 09-S | 07-111 | LG 776 |
| 24 050 10 | 07-063 | LG 775 |
| 24 050 10 | 07-111 | LG 776 |
| 24 050 10S | 07-063 | LG 775 |
| 24 050 10-S | 07-063 | LG 775 |
| 24 050 10-S | 07-111 | LG 776 |
| 24 050 10-S1 | 07-063 | LG 775 |
| 24 050 10-S1 | 07-111 | LG 776 |
| 24 050 13 | 07-063 | LG 775 |
| 24 050 13 | 07-111 | LG 776 |
| 24 050 13-S | 07-063 | LG 775 |
| 24 050 13-S | 07-111 | LG 776 |
| 24 050 13-S1 | 07-063 | LG 775 |
| 24 050 13-S1 | 07-111 | LG 776 |
| 24 083 02 | 30-944 | LG 207 |
| 24 083 02-S | 30-944 | LG 207 |
| 24 083 02-S1 | 30-944 | LG 207 |
| 24 083 03 | 30-089 | LG 204 |
| 24 083 03 | 30-844 | LG 204 |
| 24 083 03-S | 30-089 | LG 204 |
| 24 083 03-S | 30-844 | LG 204 |
| 24 083 03-S1 | 30-089 | LG 204 |
| 24 083 03-S1 | 30-844 | LG 204 |
| 24 083 04 | 30-945 | LG 207 |
| 24 083 05 | 30-945 | LG 207 |
| 24 083 05-S | 30-945 | LG 207 |
| 24 083 05-S1 | 30-945 | LG 207 |
| 24 083-03S1 | 30-089 | LG 204 |
| 24 098 01 | 33-714 | LG 918 |
| 24 098 01S | 33-714 | LG 918 |
| 24 098 01-S | 33-714 | LG 918 |
| 24 584 03 | 33-518 | LG 785 |
| 24 584 11 | 33-518 | LG 785 |
| 24 584 11-S | 33-518 | LG 785 |
| 24 584 15 | 33-518 | LG 785 |
| 24 584 15-S | 33-518 | LG 785 |
| 24 584 36-S | 33-518 | LG 785 |
| 24 586 36 | 33-518 | LG 785 |
| 24 757 23 | 33-518 | LG 785 |
| 24 883 03-S1 | 30-089 | LG 204 |
| 24 883 03-S1 | 30-844 | LG 204 |
| 24-050-02 | 07-111 | LG 776 |
| 24-050-02-S | 07-111 | LG 776 |
| 24-050-02-S1 | 07-111 | LG 776 |
| 24-050-10 | 07-063 | LG 775 |
| 24-050-10 | 07-111 | LG 776 |
| 24-050-10S | 07-063 | LG 775 |
| 24-050-10S | 07-111 | LG 776 |
| 24-050-10-S | 07-063 | LG 775 |
| 24-050-10-S1 | 07-063 | LG 775 |
| 24-050-13-S | 07-063 | LG 775 |
| 24-050-13-S1 | 07-063 | LG 775 |
| 24-083-02 | 30-944 | LG 207 |
| 24-083-02-S | 30-944 | LG 207 |
| 24-083-02-S1 | 30-944 | LG 207 |
| 2408303 | 30-089 | LG 204 |
| 24-083-03 | 30-089 | LG 204 |
| 24-083-03 | 30-844 | LG 204 |
| 2408303S | 30-089 | LG 204 |
| 24-083-03-S | 30-089 | LG 204 |
| 24-083-03-S | 30-844 | LG 204 |
| 24-083-03-S1 | 30-089 | LG 204 |
| 24-083-03-S1 | 30-844 | LG 204 |
| 24-083-05 | 30-945 | LG 207 |

X



* OREGON® Gator™ replacement blade

## KOHLER

| OEM No. | OREGON | Page |
|---|---|---|
| 24-083-05-S | 30-945 | LG 207 |
| 24-083-05-S1 | 30-945 | LG 207 |
| 24-098-01 | 33-714 | LG 918 |
| 24-098-01S | 33-714 | LG 918 |
| 24-098-01-S | 33-714 | LG 918 |
| 24-584-036-S | 33-518 | LG 785 |
| 24-584-15-S | 33-518 | LG 785 |
| 24-584-36-S | 33-518 | LG 785 |
| 24-883-03-S1 | 30-089 | LG 204 |
| 24-883-03-S1 | 30-844 | LG 204 |
| 25 050 01 | 07-331 | LG 776 |
| 25 050 01 | 69-281 | LG 814 |
| 25 050 01 | 83-013 | LG 817 |
| 25 050 01 | 83-401 | LG 817 |
| 25 050 02 | 07-331 | LG 776 |
| 25 050 02 | 69-281 | LG 814 |
| 25 050 02 | 83-013 | LG 817 |
| 25 050 02 | 83-401 | LG 817 |
| 25 050 02-S | 07-331 | LG 776 |
| 25 050 02-S1 | 07-331 | LG 776 |
| 25 050 03 | 07-332 | LG 776 |
| 25 050 03-S | 07-332 | LG 776 |
| 25 050 03-S1 | 07-332 | LG 776 |
| 25 050 07 | 07-331 | LG 776 |
| 25 050 07S | 07-331 | LG 776 |
| 25 050 07-S | 07-331 | LG 776 |
| 25 050 07-S1 | 07-331 | LG 776 |
| 25 050 08-S | 07-332 | LG 776 |
| 25 050 08-S1 | 07-332 | LG 776 |
| 25 050 10-S | 07-332 | LG 776 |
| 25 050 22S | 07-332 | LG 776 |
| 25 050 22-S | 07-332 | LG 776 |
| 25 050 22-S1 | 07-332 | LG 776 |
| 25 083 01 | 30-055 | LG 204 |
| 25 083 01 | 30-845 | LG 208 |
| 25 083 01S | 30-055 | LG 204 |
| 25 083 01S | 30-845 | LG 208 |
| 25 083 01-S | 30-055 | LG 204 |
| 25 083 01-S | 30-845 | LG 208 |
| 25 083 02 | 30-708 | LG 204 |
| 25 083 02S | 30-708 | LG 204 |
| 25 083 02-S | 30-708 | LG 204 |
| 25 083 03 | 30-712 | LG 205 |
| 25 083 03S | 30-712 | LG 205 |
| 25 083 03-S | 30-712 | LG 205 |
| 25 083 04 | 30-056 | LG 208 |
| 25 083 04 | 30-849 | LG 204 |
| 25 083 04-S | 30-056 | LG 208 |
| 25 083 04-S | 30-849 | LG 204 |
| 25 098 03 | 33-722 | LG 918 |
| 25 098 03-S | 33-722 | LG 918 |
| 25 098 04 | 33-722 | LG 918 |
| 25 098 04S | 33-722 | LG 918 |
| 25 098 04-S | 33-722 | LG 918 |
| 25 098 05 | 33-722 | LG 918 |
| 25 098 05-S | 33-722 | LG 918 |
| 25 098 06 | 33-722 | LG 918 |
| 25 098 06-S | 33-722 | LG 918 |
| 25 098 07 | 33-722 | LG 918 |
| 25 098 07-S | 33-722 | LG 918 |
| 25 098 08 | 33-714 | LG 918 |
| 25 098 08-S | 33-710 | LG 918 |
| 25 098 08-S | 33-714 | LG 918 |
| 25 098 09 | 33-714 | LG 918 |
| 25 098 09-S | 33-714 | LG 918 |
| 25 098 10-S | 33-714 | LG 918 |
| 25 098 11S | 33-714 | LG 918 |
| 25 098 11-S | 33-714 | LG 918 |
| 25 099 02 | 33-394 | LG 944 |
| 25 099 04 | 33-394 | LG 944 |
| 25 099 04S | 33-394 | LG 944 |
| 25 099 04-S | 33-394 | LG 944 |
| 25 099 32-S | 33-394 | LG 944 |
| 25 403 22-S | 33-400 | LG 732 |
| 25 755 03 | 33-401 | LG 732 |
| 25 755 03S | 33-401 | LG 732 |
| 25 755 03-S | 33-401 | LG 732 |
| 25 755 22 | 07-001 | LG 765 |
| 25 757 01 | 49-401 | LG 605 |
| 25 757 01S | 49-401 | LG 605 |
| 25 757 01-S | 49-401 | LG 605 |
| 25 757 08 | 49-700 | LG 605 |
| 25 757 11 | 49-700 | LG 605 |
| 25 757 11-S | 49-700 | LG 605 |
| 25 757 13 | 49-700 | LG 605 |
| 25 883 01 | 30-847 | LG 205 |
| 25 883 01S1 | 30-082 | LG 205 |
| 25 883 01S1 | 30-847 | LG 205 |
| 25 883 01-S1 | 30-082 | LG 205 |
| 25 883 01-S1 | 30-847 | LG 205 |
| 25 883 03S1 | 30-080 | LG 205 |
| 25 883 03S1 | 30-819 | LG 205 |
| 25 883 03-S1 | 30-080 | LG 205 |
| 25 883 03-S1 | 30-819 | LG 205 |
| 25-050-01 | 69-281 | LG 814 |
| 25-050-01 | 83-013 | LG 817 |
| 25-050-01 | 83-401 | LG 817 |
| 25-050-02 | 69-281 | LG 814 |
| 25-050-02 | 83-013 | LG 817 |
| 25-050-02 | 83-401 | LG 817 |
| 25-050-02-S | 07-331 | LG 776 |
| 2505007S | 07-331 | LG 776 |
| 25-050-07S | 07-331 | LG 776 |
| 25-050-07-S | 07-331 | LG 776 |
| 2505022S | 07-332 | LG 776 |
| 25-050-22S | 07-332 | LG 776 |
| 2505022S1 | 07-332 | LG 776 |
| 25083003S | 30-712 | LG 205 |
| 25-083-01 | 30-055 | LG 204 |
| 25-083-01 | 30-845 | LG 208 |
| 2508301S | 30-055 | LG 204 |
| 25-083-01S | 30-055 | LG 204 |
| 25-083-01S | 30-845 | LG 208 |
| 25-083-01-S | 30-055 | LG 204 |
| 25-083-01-S | 30-845 | LG 208 |
| 25-083-02 | 30-708 | LG 204 |
| 2508302S | 30-708 | LG 204 |
| 25-083-02S | 30-708 | LG 204 |
| 25-083-02-S | 30-708 | LG 204 |
| 25-083-03 | 30-712 | LG 205 |
| 25-083-03S | 30-712 | LG 205 |
| 25-083-03-S | 30-712 | LG 205 |
| 25-083-04 | 30-056 | LG 208 |
| 25-083-04 | 30-849 | LG 204 |
| 25-083-04S | 30-056 | LG 208 |
| 25-083-04-S | 30-056 | LG 208 |
| 25-083-04-S | 30-849 | LG 204 |
| 25-098-04 | 33-722 | LG 918 |
| 25-098-04S | 33-722 | LG 918 |
| 25-098-04-S | 33-722 | LG 918 |
| 25-098-05-S | 33-722 | LG 918 |
| 25-098-07 | 33-722 | LG 918 |
| 25-098-07-S | 33-722 | LG 918 |
| 2509807SSTARTER | 33-722 | LG 918 |
| 25-098-08 | 33-714 | LG 918 |
| 25-098-09S | 33-714 | LG 918 |
| 25-098-09-S | 33-714 | LG 918 |
| 2509809SSTARTER | 33-714 | LG 918 |
| 25-098-11S | 33-714 | LG 918 |
| 25-098-11-S | 33-714 | LG 918 |
| 25-099-02 | 33-394 | LG 944 |
| 25-099-04 | 33-394 | LG 944 |
| 25-403-03-S | 33-401 | LG 732 |
| 2540322S | 33-400 | LG 732 |
| 25-462-03-S | 07-407 | LG 767 |
| 2575503 | 33-401 | LG 732 |
| 25-755-03 | 33-401 | LG 732 |
| 25-755-03S | 33-401 | LG 732 |
| 25-755-03-S | 33-401 | LG 732 |
| 25-755-22 | 07-001 | LG 765 |
| 25-757-01 | 49-401 | LG 605 |
| 2575701S | 49-401 | LG 605 |
| 25-757-01S | 49-401 | LG 605 |
| 25-757-01-S | 49-401 | LG 605 |
| 25-757-08 | 49-700 | LG 605 |
| 25-757-11 | 49-700 | LG 605 |
| 25-757-11S | 49-700 | LG 605 |
| 25-757-13 | 49-700 | LG 605 |
| 25-883-01 | 30-847 | LG 205 |
| 25-883-01-51 | 30-082 | LG 205 |
| 25-883-01S1 | 30-082 | LG 205 |
| 25-883-01S1 | 30-847 | LG 205 |
| 25-883-01-S1 | 30-082 | LG 205 |
| 25-883-01-S1 | 30-847 | LG 205 |
| 25-883-03S1 | 30-080 | LG 205 |
| 25-883-03S1 | 30-819 | LG 205 |
| 25-883-03-S1 | 30-080 | LG 205 |
| 25-883-03-S1 | 30-819 | LG 205 |
| 27 755 14S | 45-118 | LG 760 |
| 27 755 14-S | 45-118 | LG 760 |
| 275679 | 35-006 | LG 808 |
| 275679S | 35-006 | LG 808 |
| 275679-S | 35-006 | LG 808 |
| 275776 | 49-401 | LG 605 |
| 275778 | 49-401 | LG 605 |
| 277068 | 83-028 | LG 817 |
| 277233 | 83-028 | LG 817 |
| 277233-S | 83-028 | LG 817 |
| 27-755-14S | 45-118 | LG 760 |
| 27-755-14-S | 45-118 | LG 760 |
| 28 050 01 | 83-013 | LG 817 |
| 28 050 01 | 83-401 | LG 817 |
| 28 050 01-S | 83-013 | LG 817 |
| 28 083 03 | 30-023 | LG 205 |
| 28 083 03-S | 30-023 | LG 205 |
| 28-050-01 | 83-013 | LG 817 |
| 28-050-01 | 83-401 | LG 817 |
| 28-083-03 | 30-023 | LG 205 |
| 28-083-03-S | 30-023 | LG 205 |
| 32 083 03-S | 30-130 | LG 205 |
| 32 083 05-S | 30-459 | LG 207 |
| 32 083 06-S | 30-159 | LG 205 |
| 32 083 08-S | 30-460 | LG 207 |
| 32 098 01 | 33-710 | LG 918 |
| 32 098 01 | 33-742 | |
| 32 098 01-S | 33-742 | |
| 32 098 03 | 33-742 | |
| 32 098 03-S | 33-742 | |
| 32 098 04 | 33-742 | |
| 32 098 04-S | 33-742 | |
| 32 883 03 | 30-130 | LG 205 |
| 32 883 03-S1 | 30-130 | LG 205 |
| 32 883 03-S1 | 30-159 | LG 205 |
| 32 883 06-S1 | 30-159 | LG 205 |
| 3208303S | 30-159 | LG 205 |
| 32-083-06-S | 30-159 | LG 205 |
| 3209801 | 33-710 | LG 918 |
| 3209801 | 33-742 | |
| 32-098-01 | 33-742 | |
| 32-098-01-S | 33-742 | |
| 32-098-02-S | 33-742 | |
| 32-098-03S | 33-742 | |
| 32-098-03-S | 33-742 | |
| 32-098-04S | 33-742 | |
| 3288303S1 | 30-130 | LG 205 |
| 32-883-03-S1 | 30-130 | LG 205 |
| 41 050 03 | 07-331 | LG 776 |
| 41 098 03 | 33-702 | LG 919 |
| 41 098 04 | 33-702 | LG 919 |
| 41 098 06 | 33-702 | LG 919 |
| 41 098 06S | 33-702 | LG 919 |
| 41 098 06-S | 33-702 | LG 919 |
| 41 403 01 | 33-401 | LG 732 |
| 41 403 04 | 33-401 | LG 732 |
| 41 403 05 | 33-401 | LG 732 |
| 41 403 06 | 33-400 | LG 732 |
| 41 403 06-S | 33-400 | LG 732 |
| 41 403 09-S | 33-401 | LG 732 |
| 41 403 10-S | 33-401 | LG 732 |
| 41 519 21-S | 33-333 | LG 786 |
| 41 755 33 | 33-751 | LG 927 |
| 41 755 33-S | 33-751 | LG 927 |
| 41-098-03 | 33-702 | LG 919 |
| 41-098-04 | 33-702 | LG 919 |
| 41-098-06 | 33-702 | LG 919 |
| 41-098-06S | 33-702 | LG 919 |
| 41-098-06-S | 33-702 | LG 919 |
| 41-098-08-S | 33-702 | LG 919 |
| 4140301 | 33-401 | LG 732 |
| 4140303 | 33-401 | LG 732 |
| 4140303S | 33-401 | LG 732 |
| 4140304 | 33-401 | LG 732 |
| 4140305 | 33-401 | LG 732 |
| 41-403-05 | 33-401 | LG 732 |
| 4140306 | 33-400 | LG 732 |
| 41-403-06 | 33-400 | LG 732 |
| 4140306S | 33-400 | LG 732 |
| 41-403-06-S | 33-400 | LG 732 |
| 4140309 | 33-401 | LG 732 |
| 4140309S | 33-401 | LG 732 |
| 4140309SREGRECT | 33-401 | LG 732 |
| 4140310 | 33-401 | LG 732 |
| 4140310S | 33-401 | LG 732 |
| 41-519-21-S | 33-333 | LG 786 |
| 41-755-33 | 33-751 | LG 927 |
| 41-755-33S | 33-751 | LG 927 |
| 41-755-33-S | 33-751 | LG 927 |
| 45 083 01 | 30-946 | LG 207 |
| 45 083 01-S | 30-946 | LG 207 |
| 45 083 01-S1 | 30-946 | LG 207 |
| 45 083 02 | 30-093 | LG 206 |
| 45 083 02 | 30-812 | LG 206 |
| 45 083 02 | 30-946 | LG 207 |
| 45 083 02-S | 30-093 | LG 206 |
| 45 083 02-S1 | 30-093 | LG 206 |
| 45 098 05 | 33-704 | LG 919 |
| 45 098 07 | 33-704 | LG 919 |
| 45 098 07 | 33-774 | LG 919 |
| 45 098 09 | 33-704 | LG 919 |
| 45 098 09 | 33-774 | LG 919 |
| 45 098 09S | 33-704 | LG 919 |
| 45 098 09S | 33-774 | LG 919 |
| 45 098 09-S | 33-704 | LG 919 |
| 45 098 09-S | 33-774 | LG 919 |
| 45 170 01-S | 33-704 | LG 919 |
| 45 170 01-S | 33-774 | LG 919 |
| 45 755 03 | 33-704 | LG 919 |
| 45 755 03 | 33-774 | LG 919 |
| 45 883 02-S | 30-812 | LG 206 |
| 45 883 02-S1 | 30-812 | LG 206 |
| 45-083-01 | 30-946 | LG 207 |
| 45-083-01-S | 30-946 | LG 207 |
| 45-083-01-S1 | 30-946 | LG 207 |
| 45-083-02 | 30-093 | LG 206 |
| 45-083-02 | 30-812 | LG 206 |
| 45-083-02 | 30-946 | LG 207 |
| 4508302S | 30-093 | LG 206 |
| 45-083-02-S | 30-093 | LG 206 |
| 45-083-02-S1 | 30-093 | LG 206 |
| 45-098-05 | 33-704 | LG 919 |
| 45-098-07 | 33-704 | LG 919 |
| 45-098-07 | 33-774 | LG 919 |
| 45-098-09 | 33-704 | LG 919 |
| 45-098-09 | 33-774 | LG 919 |
| 45-098-09S | 33-704 | LG 919 |
| 45-098-09S | 33-774 | LG 919 |

* OREGON® Gator™ replacement blade

# 2019 OEM X-Reference

| OEM No. | OREGON | Page |
|---|---|---|
| **KOHLER** | | |
| 45-098-09-S | 33-704 | LG 919 |
| 45-098-09-S | 33-774 | LG 919 |
| 45-170-01-S | 33-774 | LG 919 |
| 45-755-03 | 33-774 | LG 919 |
| 45-883-02-51 | 30-093 | LG 206 |
| 45-883-02-51 | 30-812 | LG 206 |
| 45-883-02-S | 30-812 | LG 206 |
| 45-883-02-S1 | 30-812 | LG 206 |
| 47 041 10 | 50-041 | LG 757 |
| 47 041 10-S | 50-041 | LG 757 |
| 47 041 15 | 50-041 | LG 757 |
| 47 041 15S | 50-041 | LG 757 |
| 47 041 15-S | 50-041 | LG 757 |
| 47 083 01 | 30-098 | LG 206 |
| 47 083 01 | 30-848 | LG 206 |
| 47 083 01-S | 30-098 | LG 206 |
| 47 083 01-S | 30-848 | LG 206 |
| 47 083 01-S1 | 30-098 | LG 206 |
| 47 083 01-S1 | 30-848 | LG 206 |
| 47 083 03 | 30-095 | LG 206 |
| 47 083 03 | 30-818 | LG 206 |
| 47 083 03 | 69-395 | LG 206 |
| 47 083 03-S | 30-095 | LG 206 |
| 47 083 03-S | 30-818 | LG 206 |
| 47 083 03-S | 69-395 | LG 206 |
| 47 083 03-S1 | 30-095 | LG 206 |
| 47 083 03-S1 | 30-818 | LG 206 |
| 47 083 03-S1 | 69-395 | LG 206 |
| 47 145 01 | 33-333 | LG 786 |
| 47 150 01 | 33-628 | LG 789 |
| 47 150 03 | 33-628 | LG 789 |
| 47 150 03-S | 33-628 | LG 789 |
| 47 883 01-S1 | 30-098 | LG 206 |
| 47 883 01-S1 | 30-848 | LG 206 |
| 47 883 03-S1 | 30-818 | LG 206 |
| 47 883 03-S1 | 69-395 | LG 206 |
| 47-041-10 | 50-041 | LG 757 |
| 47-041-10-S | 50-041 | LG 757 |
| 47-041-15 | 50-041 | LG 757 |
| 47-041-15S | 50-041 | LG 757 |
| 47-041-15-S | 50-041 | LG 757 |
| 47-083-01 | 30-098 | LG 206 |
| 47-083-01 | 30-848 | LG 206 |
| 4708301S | 30-098 | LG 206 |
| 47-083-01-S | 30-098 | LG 206 |
| 47-083-01-S | 30-848 | LG 206 |
| 47-083-01-S1 | 30-098 | LG 206 |
| 47-083-01-S1 | 30-848 | LG 206 |
| 47-083-03 | 30-095 | LG 206 |
| 47-083-03 | 30-818 | LG 206 |
| 47-083-03 | 69-395 | LG 206 |
| 47-083-03-S | 30-095 | LG 206 |
| 47-083-03-S | 30-818 | LG 206 |
| 47-083-03-S | 69-395 | LG 206 |
| 47-083-03-S1 | 30-095 | LG 206 |
| 47-083-03-S1 | 30-818 | LG 206 |
| 47-083-03-S1 | 69-395 | LG 206 |
| 47-145-01 | 33-333 | LG 786 |
| 47-150-01 | 33-628 | LG 789 |
| 47-150-03 | 33-628 | LG 789 |
| 47-883 03-S1 | 30-095 | LG 206 |
| 47-883-01-S1 | 30-098 | LG 206 |
| 47-883-01-S1 | 30-848 | LG 206 |
| 47-883-03-S1 | 30-095 | LG 206 |
| 47-883-03-S1 | 30-818 | LG 206 |
| 47-883-03-S1 | 69-395 | LG 206 |
| 48 099 01 | 33-389 | LG 945 |
| 48 099 01-S | 33-389 | LG 945 |
| 48 755 02 | 33-754 | LG 927 |
| 48 755 40 | 33-754 | LG 927 |
| 48-099-01 | 33-389 | LG 945 |
| 48-099-01-S | 33-389 | LG 945 |
| 48-755-01 | 33-754 | LG 927 |
| 48-755-02 | 33-754 | LG 927 |
| 48-755-40 | 33-754 | LG 927 |
| 52 041 18 | 50-043 | LG 757 |
| 52 041 20 | 50-043 | LG 757 |
| 52 041 20S | 50-043 | LG 757 |
| 52 041 20-S | 50-043 | LG 757 |
| 52 041 50S | 50-043 | LG 757 |
| 52 041 50-S | 50-043 | LG 757 |
| 52 050 02 | 83-403 | LG 818 |
| 52 050 02-S | 83-283 | LG 818 |
| 52 050 02-S | 83-503 | LG 818 |
| 52 052 01 | 50-043 | LG 757 |
| 52 052 03 | 50-043 | LG 757 |
| 52 052 04 | 50-043 | LG 757 |
| 52 083 01 | 30-947 | LG 207 |
| 52 083 01-S | 30-947 | LG 207 |
| 52 083 01-S1 | 30-947 | LG 207 |
| 52 083 02 | 30-946 | LG 207 |
| 52 098 03 | 33-707 | LG 920 |
| 52 098 03 | 33-777 | LG 920 |
| 52 098 06 | 33-718 | LG 919 |
| 52 098 09 | 33-707 | LG 920 |
| 52 098 09 | 33-777 | LG 920 |
| 52 098 12 | 33-707 | LG 920 |
| 52 098 12 | 33-777 | LG 920 |
| 52 098 12-S | 33-707 | LG 920 |
| 52 098 12-S | 33-777 | LG 920 |
| 52 098 13 | 33-718 | LG 919 |
| 52 098 13S | 33-718 | LG 919 |
| 52 170 03-S | 33-718 | LG 919 |
| 52 584 01 | 33-519 | LG 785 |
| 52 584 02 | 33-519 | LG 785 |
| 52 584 02-S | 33-519 | LG 785 |
| 52 755 05 | 33-754 | LG 927 |
| 52 755 15 | 33-761 | LG 926 |
| 52-041-18 | 50-043 | LG 757 |
| 52-041-20 | 50-043 | LG 757 |
| 52-041-20S | 50-043 | LG 757 |
| 52-041-20-S | 50-043 | LG 757 |
| 52-041-50S | 50-043 | LG 757 |
| 52-041-50-S | 50-043 | LG 757 |
| 52-050-02 | 83-283 | LG 818 |
| 52-050-02 | 83-403 | LG 818 |
| 52-050-02-S | 83-503 | LG 818 |
| 520502S | 83-283 | LG 818 |
| 52-050-2-S | 83-283 | LG 818 |
| 52-052-03 | 50-043 | LG 757 |
| 52-052-04 | 50-043 | LG 757 |
| 52-083-01 | 30-947 | LG 207 |
| 52-083-01-S | 30-947 | LG 207 |
| 5208301S1 | 30-947 | LG 207 |
| 52-083-01-S1 | 30-947 | LG 207 |
| 52-098-03 | 33-707 | LG 920 |
| 52-098-03 | 33-777 | LG 920 |
| 52-098-06 | 33-718 | LG 919 |
| 52-098-06-S | 33-718 | LG 919 |
| 52-098-09 | 33-707 | LG 920 |
| 52-098-09 | 33-777 | LG 920 |
| 52-098-12 | 33-707 | LG 920 |
| 52-098-12 | 33-777 | LG 920 |
| 52-098-12-S | 33-707 | LG 920 |
| 52-098-12-S | 33-777 | LG 920 |
| 52-098-13 | 33-718 | LG 919 |
| 52-098-13S | 33-718 | LG 919 |
| 52-098-13-S | 33-718 | LG 919 |
| 52-170-03-S | 33-718 | LG 919 |
| 52-584-02 | 33-519 | LG 785 |
| 52-584-02-S | 33-519 | LG 785 |
| 52-755-05 | 33-754 | LG 927 |
| 52-755-15 | 33-761 | LG 926 |
| 71-755-33S | 33-751 | LG 927 |
| 82 755 28 | 33-761 | LG 926 |
| 82 755 28-S | 33-761 | LG 926 |
| 82 755 32 | 33-754 | LG 927 |
| 82-755-28 | 33-761 | LG 926 |
| 82-755-28-S | 33-761 | LG 926 |
| 82-755-32 | 33-754 | LG 927 |
| A-210101 | 07-001 | LG 765 |
| A-220474 | 33-628 | LG 789 |
| A220521 | 35-008 | LG 808 |
| A-220521 | 35-008 | LG 808 |
| A-220981 | 33-628 | LG 789 |
| A-231079 | 33-628 | LG 789 |
| A-234193 | 33-702 | LG 919 |
| A-237083 | 33-016 | LG 789 |
| A-237131 | 33-704 | LG 919 |
| A237510 | 33-704 | LG 919 |
| A-237510 | 33-704 | LG 919 |
| A-237534 | 33-704 | LG 919 |
| B-234193 | 33-702 | LG 919 |
| KU AF4502K1 | 30-019 | LG 208 |
| **KUBOTA** | | |
| 0801-06204 | 45-259 | LG 224 |
| 08101-06205 | 45-018 | LG 247 |
| 12581-43010 | 07-104 | LG 776 |
| 1258143012 | 07-104 | LG 776 |
| 12581-43012 | 07-104 | LG 776 |
| 12624 | 33-002 | LG 946 |
| 12681-11220 | 30-316 | LG 208 |
| 1269143010 | 07-104 | LG 776 |
| 12691-43010 | 07-104 | LG 776 |
| 1335143010 | 07-104 | LG 776 |
| 13351-43010 | 07-104 | LG 776 |
| 13351-4301-0 | 07-104 | LG 776 |
| 14911-97010 | 15-516 | LG 298 |
| 15481-97010 | 15-517 | LG 298 |
| 1553164601 | 33-249 | LG 731 |
| 15531-64601 | 33-249 | LG 731 |
| 1553164603 | 33-249 | LG 731 |
| 15531-64603 | 33-249 | LG 731 |
| 15852-11081 | 30-019 | LG 208 |
| 15852-11082 | 30-019 | LG 208 |
| 265924 | 15-011 | LG 299 |
| 62421-62310 | 15-519 | LG 298 |
| 65621-37210 | 91-417 | LG 500 |
| 65621-37-212 | 91-417 | LG 500 |
| 66101-25080 | 15-522 | LG 298 |
| 70000-00602 | 396-787* | LG 500 |
| 70000-00602 | 596-787* | LG 500 |
| 70000-00602 | 91-438 | LG 500 |
| 70000-00602 | 92-130 | LG 499 |
| 70000-00602 | 96-787* | LG 500 |
| 70000-00604 | 91-430 | LG 497 |
| 70000-00605 | 396-796* | LG 498 |
| 70000-00605 | 91-436 | LG 498 |
| 70000-11081 | 30-026 | LG 208 |
| 70000-11220 | 30-025 | LG 208 |
| 70000-11221 | 30-025 | LG 208 |
| 70000-15241 | 83-301 | LG 816 |
| 70000-25001 | 396-787* | LG 500 |
| 70000-25001 | 596-787* | LG 500 |
| 70000-25001 | 91-438 | LG 500 |
| 70000-25001 | 92-130 | LG 499 |
| 70000-25001 | 96-787* | LG 500 |
| 70000-25002 | 396-814* | LG 501 |
| 70000-25002 | 596-717* | LG 501 |
| 70000-25002 | 91-493 | LG 500 |
| 70000-25002 | 96-372* | LG 500 |
| 70000-25003 | 91-430 | LG 497 |
| 70000-25004 | 396-796* | LG 498 |
| 70000-25004 | 91-436 | LG 498 |
| 70000-25005 | 91-433 | LG 498 |
| 70000-25009 | 91-435 | LG 498 |
| 70000-25013 | 396-814* | LG 501 |
| 70000-25013 | 596-717* | LG 501 |
| 70000-25013 | 91-493 | LG 500 |
| 70000-25013 | 96-372* | LG 500 |
| 70000-2503 | 91-430 | LG 497 |
| 70000-25030 | 396-814* | LG 501 |
| 70000-25030 | 596-717* | LG 501 |
| 70000-25030 | 96-372* | LG 500 |
| 70000-34330 | 91-435 | LG 498 |
| 7000-25003 | 91-430 | LG 497 |
| 70050-94495 | 15-525 | LG 298 |
| 70050-94497 | 15-526 | LG 298 |
| 70090-30708 | 396-814* | LG 501 |
| 70090-30708 | 596-717* | LG 501 |
| 70090-30708 | 96-372* | LG 500 |
| 70712-34330 | 91-430 | LG 497 |
| 70713-34770 | 15-529 | LG 298 |
| 740000-0062 | 92-049 | LG 500 |
| 76500-34330 | 91-433 | LG 498 |
| 76505-34330 | 91-435 | LG 498 |
| 76505-34710 | 15-535 | LG 298 |
| 76505-46250 | 72-322 | LG 1041 |
| 76516-61510 | 15-536 | LG 298 |
| 76529-34330 | 396-796* | LG 498 |
| 76529-34330 | 91-436 | LG 498 |
| 76529-34710 | 15-538 | LG 298 |
| 76539-34330 | 396-787* | LG 500 |
| 76539-34330 | 596-787* | LG 500 |
| 76539-34330 | 91-438 | LG 500 |
| 76539-34330 | 92-130 | LG 499 |
| 76539-34330 | 96-787* | LG 500 |
| 76539-34710 | 15-539 | LG 298 |
| 76543-46250 | 72-323 | LG 1041 |
| 76553-34330 | 396-814* | LG 501 |
| 76553-34330 | 596-717* | LG 501 |
| 76553-34330 | 91-493 | LG 500 |
| 76553-34330 | 96-372* | LG 500 |
| 76553-34710 | 15-541 | LG 298 |
| 76559-46250 | 72-323 | LG 1041 |
| 9657 | 33-002 | LG 946 |
| K1211-62230 | 33-002 | LG 946 |
| K1211-62231 | 33-002 | LG 946 |
| K2561-62251 | 33-015 | LG 948 |
| K5111-71940 | 92-121 | LG 499 |
| K5111-97520 | 92-121 | LG 499 |
| K5112-71924 | 92-122 | LG 499 |
| K5112-71940 | 92-122 | LG 499 |
| K5112-72420 | 72-034 | LG 1041 |
| K5181-71940 | 391-617* | LG 497 |
| K5182-71840 | 92-047 | LG 497 |
| K5184-97532 | 592-124* | LG 497 |
| K5184-97532 | 92-124 | LG 497 |
| K5221-71920 | 396-812* | LG 498 |
| K5221-71920 | 596-812* | LG 498 |
| K5231-92340 | 396-748* | LG 499 |
| K5231-92340 | 96-748* | LG 499 |
| K5351-34340 | 396-812* | LG 498 |
| K5351-34340 | 596-812* | LG 498 |
| K5351-34342 | 396-812* | LG 498 |
| K5351-34342 | 596-812* | LG 498 |
| K5351-34710 | 15-011 | LG 299 |
| K5351-34711 | 15-011 | LG 299 |
| K5351-3741-0 | 15-011 | LG 299 |
| K5351-99020 | 396-812* | LG 498 |
| K5351-99020 | 596-812* | LG 498 |
| K5351-99040 | 396-812* | LG 498 |
| K5351-99040 | 596-812* | LG 498 |
| K5371-34330 | 396-612* | LG 499 |
| K5371-34330 | 92-115 | LG 499 |
| K5371-34330 | 96-612* | LG 499 |
| K5371-34340 | 92-115 | LG 499 |
| K5371-34340 | 92-123 | LG 499 |
| K5371-42110 | 72-036 | LG 1041 |
| K5371-42110 | 72-311-1 | LG 1039 |
| K5371-95520 | 92-115 | LG 499 |
| K5371-97520 | 92-123 | LG 499 |
| K5371-99040 | 92-115 | LG 499 |
| K5371-99040 | 92-123 | LG 499 |
| K5371-9940 | 92-123 | LG 499 |
| K5559-34330 | 391-612* | LG 500 |
| K5559-34330 | 92-184 | LG 500 |
| K5575-34330 | 392-047* | LG 497 |

X



* OREGON® Gator™ replacement blade

| OEM No. | OREGON | Page |
|---|---|---|
| **KUBOTA** | | |
| K5575-34330 | 92-047 | LG 497 |
| K5575-34330 | 96-047* | LG 497 |
| K5575-97530 | 392-047* | LG 497 |
| K5575-97530 | 92-047 | LG 497 |
| K5575-97530 | 96-047* | LG 497 |
| K5576-34340 | 592-124* | LG 497 |
| K5576-34350 | 592-124* | LG 497 |
| K5576-34350 | 92-124 | LG 497 |
| K5576-97530 | 592-124* | LG 497 |
| K5576-97530 | 92-124 | LG 497 |
| K5579-92330 | 392-047* | LG 497 |
| K5579-92330 | 96-047* | LG 497 |
| K5579-92332 | 392-047* | LG 497 |
| K5579-92332 | 96-047* | LG 497 |
| K5583-34340 | 391-613* | LG 498 |
| K5583-34340 | 91-613 | LG 498 |
| K5583-34350 | 391-613* | LG 498 |
| K5583-97530 | 391-613* | LG 498 |
| K5583-97530 | 91-613 | LG 498 |
| K5613-34340 | 396-796* | LG 498 |
| K5613-97530 | 396-796* | LG 498 |
| K5615-34330 | 396-796* | LG 498 |
| K5615-34330 | 91-436 | LG 498 |
| K5615-34340 | 396-796* | LG 498 |
| K5615-34340 | 91-436 | LG 498 |
| K5615-34342 | 396-796* | LG 498 |
| K5615-97520 | 396-796* | LG 498 |
| K5615-97520 | 92-132 | LG 498 |
| K5617-34330 | 396-748* | LG 499 |
| K5617-34330 | 92-048 | LG 498 |
| K5617-34330 | 96-748* | LG 499 |
| K5617-97530 | 396-748* | LG 499 |
| K5617-97530 | 92-048 | LG 498 |
| K5617-97530 | 96-748* | LG 499 |
| K5617-97590 | 396-748* | LG 499 |
| K5617-97590 | 96-748* | LG 499 |
| K5619-34350 | 396-812* | LG 498 |
| K5619-34350 | 596-812* | LG 498 |
| K5619-34350 | 92-127 | LG 498 |
| K5619-97530 | 396-812* | LG 498 |
| K5619-97530 | 596-812* | LG 498 |
| K5619-97530 | 92-127 | LG 498 |
| K5639-92300 | 396-748* | LG 499 |
| K5639-92300 | 96-748* | LG 499 |
| K5639-92332 | 396-748* | LG 499 |
| K5639-92332 | 96-748* | LG 499 |
| K5645-34330 | 396-810* | LG 499 |
| K5645-34330 | 596-810* | LG 499 |
| K5645-34330 | 92-128 | LG 499 |
| K5645-34330 | 96-363* | LG 499 |
| K5645-34340 | 396-810* | LG 499 |
| K5645-34340 | 596-810* | LG 499 |
| K5645-34340 | 92-128 | LG 499 |
| K5645-34340 | 96-363* | LG 499 |
| K5645-34710 | 15-544 | LG 298 |
| K5645-97520 | 396-810* | LG 499 |
| K5645-97520 | 596-810* | LG 499 |
| K5645-97520 | 92-130 | LG 499 |
| K5645-97520 | 96-363* | LG 499 |
| K5645-97530 | 396-810* | LG 499 |
| K5645-97530 | 596-810* | LG 499 |
| K5645-97530 | 92-128 | LG 499 |
| K5645-97530 | 96-363* | LG 499 |
| K5647-3433 | 92-049 | LG 500 |
| K5647-34330 | 92-049 | LG 500 |
| K5647-34330 | 92-130 | LG 499 |
| K5647-34340 | 396-787* | LG 500 |
| K5647-34340 | 596-787* | LG 500 |
| K5647-34340 | 92-049 | LG 500 |
| K5647-34340 | 92-130 | LG 499 |
| K5647-34340 | 96-787* | LG 500 |
| K5647-34710 | 15-012 | LG 299 |
| K5647-34711 | 15-012 | LG 299 |
| K5647-97530 | 396-787* | LG 500 |
| K5647-97530 | 596-787* | LG 500 |
| K5647-97530 | 92-049 | LG 500 |
| K5647-97530 | 96-787* | LG 500 |
| K5649-3434 | 92-049 | LG 500 |
| K5651-34330 | 396-810* | LG 499 |
| K5651-34330 | 596-810* | LG 499 |
| K5651-34330 | 92-130 | LG 499 |
| K5651-34330 | 96-363* | LG 499 |
| K5651-34340 | 396-810* | LG 499 |
| K5651-34340 | 596-810* | LG 499 |
| K5651-34340 | 91-438 | LG 500 |
| K5651-34340 | 92-130 | LG 499 |
| K5651-34340 | 96-363* | LG 499 |
| K5651-34710 | 15-545 | LG 298 |
| K5651-34711 | 15-546 | LG 298 |
| K5668-34350 | 92-130 | LG 499 |
| K5668-42100 | 72-038 | LG 1041 |
| K5668-97530 | 396-787* | LG 500 |
| K5668-97530 | 596-787* | LG 500 |
| K5668-97530 | 92-049 | LG 500 |
| K5668-97530 | 96-787* | LG 500 |
| K5671-34710 | 15-547 | LG 298 |
| K5673-46251 | 72-035 | LG 1041 |
| K5676-97520 | 396-814* | LG 501 |
| K5676-97520 | 596-717* | LG 501 |
| K5676-97520 | 91-493 | LG 500 |
| K5676-97520 | 96-372* | LG 500 |
| K5677-34330 | 92-116 | LG 500 |
| K5677-34340 | 396-814* | LG 501 |
| K5677-34340 | 596-717* | LG 501 |
| K5677-34340 | 92-116 | LG 500 |
| K5677-34340 | 96-372* | LG 500 |
| K5677-34710 | 15-548 | LG 298 |
| K5677-97530 | 396-814* | LG 501 |
| K5677-97530 | 596-717* | LG 501 |
| K5677-97530 | 92-116 | LG 500 |
| K5677-97530 | 96-372* | LG 500 |
| K5698-34340 | 396-814* | LG 501 |
| K5698-34340 | 596-717* | LG 501 |
| K5698-34340 | 91-493 | LG 500 |
| K5698-34340 | 96-372* | LG 500 |
| K5698-97530 | 396-814* | LG 501 |
| K5698-97530 | 596-717* | LG 501 |
| K5698-97530 | 91-493 | LG 500 |
| K5698-97530 | 96-372* | LG 500 |
| K5700-34710 | 15-549 | LG 299 |
| K5763-34710 | 15-550 | LG 299 |
| K5763-46250 | 72-035 | LG 1041 |
| K5764-34330 | 396-796* | LG 498 |
| K5764-34330 | 92-132 | LG 498 |
| K5764-34340 | 396-796* | LG 498 |
| K5764-34340 | 92-132 | LG 498 |
| K5764-34342 | 396-796* | LG 498 |
| K5764-34342 | 92-132 | LG 498 |
| K5764-34710 | 15-043 | LG 299 |
| K5915-34360 | 592-124* | LG 497 |
| K5915-97530 | 592-124* | LG 497 |
| K5935-34360 | 396-812* | LG 498 |
| K5935-34360 | 596-812* | LG 498 |
| K5935-97530 | 396-812* | LG 498 |
| K5935-97530 | 596-812* | LG 498 |
| K5945-34360 | 396-787* | LG 500 |
| K5945-34360 | 596-787* | LG 500 |
| K5945-34360 | 96-787* | LG 500 |
| K5955-34360 | 396-816* | LG 500 |
| K5955-97530 | 396-816* | LG 500 |
| RP20153710 | 33-249 | LG 731 |
| RP201-53710 | 33-249 | LG 731 |
| RS5101 | 33-249 | LG 731 |
| RS5155 | 33-249 | LG 731 |
| **LACLEDE** | | |
| 1301 | 67-013 | LG 965 |
| 1308 | 67-017 | LG 965 |
| 3300 | 67-001 | LG 965 |
| 3302 | 67-020 | LG 965 |
| 3305 | 67-018 | LG 965 |
| 3307 | 67-005 | LG 965 |
| 3309 | 67-003 | LG 965 |
| 3310 | 67-009 | LG 965 |
| 3315 | 67-004 | LG 965 |
| 4300 | 67-014 | LG 965 |
| 5303 | 67-011 | LG 965 |
| 5307 | 67-015 | LG 965 |
| 5308 | 67-019 | LG 965 |
| 7106 | 67-012 | LG 965 |
| 7121 | 67-002 | LG 965 |
| 7129 | 67-010 | LG 965 |
| **LANDPRIDE** | | |
| 839-157C | 396-735* | LG 452 |
| 839-157C | 596-308* | LG 548 |
| 839-157C | 92-207 | LG 456 |
| 839-157C | 96-308* | LG 456 |
| 839-179C | 396-703* | LG 502 |
| 839-179C | 90-208 | LG 502 |
| 839-181C | 396-703* | LG 502 |
| 839-267C | 90-205 | LG 501 |
| 839-267C | 96-302* | LG 470 |
| 839-270C | 396-735* | LG 452 |
| 839-270C | 596-308* | LG 548 |
| 839-270C | 96-302* | LG 470 |
| 839-270C | 96-308* | LG 456 |
| 890-171C | 596-627* | LG 502 |
| 890-171C | 91-457 | LG 502 |
| 890-172C | 396-728* | LG 503 |
| 890-172C | 91-456 | LG 502 |
| 890-200C | 396-728* | LG 503 |
| 890-200C | 92-171 | LG 503 |
| 890-204C | 596-627* | LG 502 |
| 890-204C | 92-173 | LG 502 |
| 890-318C | 396-728* | LG 503 |
| 890-318C | 92-170 | LG 502 |
| 890-325C | 91-087 | LG 502 |
| 890-326C | 92-175 | LG 502 |
| 890-375C | 596-627* | LG 502 |
| 890-375C | 92-172 | LG 502 |
| 890-377C | 596-627* | LG 502 |
| 890-698C | 396-728* | LG 503 |
| 890-702C | 596-627* | LG 502 |
| 890-874C | 92-174 | LG 502 |
| 890-951C | 596-627* | LG 502 |
| 890-951C | 91-457 | LG 502 |
| 891-428C | 596-627* | LG 502 |
| **LASTEC** | | |
| 027048 | 396-726* | LG 391 |
| 027048 | 596-344* | LG 495 |
| 027048 | 91-623 | LG 485 |
| 027048 | 96-344* | LG 536 |
| 063265 | 396-727* | LG 467 |
| 063265 | 596-347* | LG 448 |
| 063265 | 96-347* | LG 387 |
| P107 | 396-731* | LG 427 |
| P128 | 396-727* | LG 467 |
| P128 | 596-347* | LG 448 |
| P128 | 91-628 | LG 387 |
| P128 | 96-347* | LG 387 |
| P246 | 396-727* | LG 467 |
| P246 | 596-347* | LG 448 |
| P246 | 91-308 | LG 467 |
| P246 | 96-347* | LG 387 |
| P322 | 396-727* | LG 467 |
| P322 | 596-347* | LG 448 |
| P322 | 96-347* | LG 387 |
| P701 | 396-731* | LG 427 |
| P848 | 396-731* | LG 427 |
| P849 | 396-731* | LG 427 |
| **LAUSON** | | |
| 32089 | 33-320-0 | LG 731 |
| **LAWN & GOLF SUPPLY** | | |
| 754-0935 | 75-092 | LG 304 |
| 954-0935 | 75-092 | LG 304 |
| **LAWN CHIEF** | | |
| 015891 | 82-493 | LG 869 |
| 094920 | 82-493 | LG 869 |
| 15891 | 82-493 | LG 869 |
| 21615 | 75-111 | LG 306 |
| 94920 | 82-493 | LG 869 |
| **LAWN-BOY** | | |
| 108-0954-03 | 96-660* | LG 441 |
| 112-8841-03 | 96-809 * | LG 505 |
| 11795 | 34-024 | LG 822 |
| 11799 | 96-809 * | LG 505 |
| 11964 | 78-034 | LG 822 |
| 120395 | 02-401 | LG 790 |
| 12388 | 45-257 | LG 245 |
| 13438 | 72-306 | LG 1038 |
| 153066 | 55-803 | LG 1022 |
| 153800 | 72-746 | LG 1032 |
| 153802 | 72-747 | LG 1036 |
| 200555 | 15-561 | LG 299 |
| 207086 | 45-257 | LG 245 |
| 207924 | 34-001 | LG 821 |
| 208808 | 72-307 | LG 1038 |
| 208918 | 72-307 | LG 1038 |
| 210453 | 72-306 | LG 1038 |
| 212655 | 33-334 | LG 730 |
| 229907 | 72-746 | LG 1032 |
| 230018 | 72-747 | LG 1036 |
| 23-0660 | 33-386 | LG 942 |
| 231290 | 78-032 | LG 822 |
| 234594 | 15-559 | LG 299 |
| 23486 | 34-031 | LG 821 |
| 236544 | 45-257 | LG 245 |
| 236879 | 33-034 | LG 742 |
| 239907 | 72-746 | LG 1032 |
| 240247 | 82-013 | LG 891 |
| 241013 | 82-013 | LG 891 |
| 241070 | 82-013 | LG 891 |
| 24445 | 34-038 | LG 821 |
| 254-72 | 45-002 | LG 237 |
| 254-78 | 45-205 | LG 228 |
| 254-79 | 45-206 | LG 231 |
| 254-94 | 45-002 | LG 237 |
| 36374 | 34-020 | LG 821 |
| 36714 | 72-307 | LG 1038 |
| 37094 | 34-022 | LG 822 |
| 37555 | 72-307 | LG 1038 |
| 396521 | 49-035 | LG 629 |
| 47-1910 | 33-334 | LG 730 |
| 551041 | 02-401 | LG 790 |
| 602052 | 49-411 | LG 759 |
| 602850 | 50-502 | LG 756 |
| 603145 | 49-035 | LG 629 |
| 605546 | 04-722 | |
| 607199 | 02-401 | LG 790 |
| 607580 | 30-949 | LG 209 |
| 607978 | 34-002 | LG 821 |
| 609493 | 30-950 | LG 209 |
| 610582 | 45-257 | LG 245 |
| 611240 | 92-011 | LG 490 |
| 612543 | 92-011 | LG 490 |
| 612543-01 | 92-011 | LG 490 |
| 612543-03 | 92-011 | LG 490 |
| 613361 | 30-758 | LG 209 |
| 6588 | 34-009 | LG 821 |
| 677052 | 07-400 | LG 767 |
| 677271 | 49-301 | LG 606 |
| 678278 | 49-035 | LG 629 |

X

* OREGON® Gator™ replacement blade

# 2019 OEM X-Reference

| OEM No. | OREGON | Page |
|---|---|---|
| **LAWN-BOY** | | |
| 678406 | 72-500 | LG 1034 |
| 678406 | 72-508 | LG 1034 |
| 678415 | 49-301 | LG 606 |
| 678637 | 72-436 | LG 1034 |
| 678638 | 72-436 | LG 1034 |
| 678882 | 49-035 | LG 629 |
| 679966 | 86-001 | LG 781 |
| 679966 | 86-009 | LG 781 |
| 681741 | 49-035 | LG 629 |
| 681849 | 30-950 | LG 209 |
| 681979 | 72-500 | LG 1034 |
| 681980 | 72-508 | LG 1034 |
| 682069 | 55-803 | LG 1022 |
| 68213 | 75-508 | LG 319 |
| 682131 | 72-508 | LG 1034 |
| 682300 | 55-820 | LG 935 |
| 682367 | 30-949 | LG 209 |
| 682915 | 92-011 | LG 490 |
| 682972 | 72-436 | LG 1034 |
| 682974 | 72-436 | LG 1034 |
| 683520 | 72-500 | LG 1034 |
| 683637 | 33-500-0 | LG 744 |
| 683682 | 92-011 | LG 490 |
| 683778 | 49-300 | LG 626 |
| 683856 | 55-800 | LG 934 |
| 684249 | 30-758 | LG 209 |
| 684333 | 86-037 | LG 781 |
| 684380 | 92-011 | LG 490 |
| 684708 | 33-500-0 | LG 744 |
| 700171 | 33-024 | LG 945 |
| 700172 | 33-386 | LG 942 |
| 700417 | 45-205 | LG 228 |
| 700418 | 45-206 | LG 231 |
| 700479 | 45-257 | LG 245 |
| 701070 | 34-009 | LG 821 |
| 701231 | 34-020 | LG 821 |
| 702030 | 33-034 | LG 742 |
| 702553 | 15-559 | LG 299 |
| 702815 | 34-024 | LG 822 |
| 702855 | 96-809 * | LG 505 |
| 703210 | 45-002 | LG 237 |
| 703275 | 45-257 | LG 245 |
| 703380 | 96-809 * | LG 505 |
| 703500 | 78-034 | LG 822 |
| 703715 | 34-038 | LG 821 |
| 703809 | 45-002 | LG 237 |
| 703962 | 34-009 | LG 821 |
| 705361 | 15-561 | LG 299 |
| 705533 | 72-307 | LG 1038 |
| 706364 | 34-008 | LG 821 |
| 706623 | 82-013 | LG 891 |
| 707380 | 72-746 | LG 1032 |
| 720249 | 33-386 | LG 942 |
| 740015 | 33-024 | LG 945 |
| 740207 | 33-334 | LG 730 |
| 740207 | 33-335 | LG 730 |
| 740207 | 33-336 | LG 730 |
| 740280 | 72-306 | LG 1038 |
| 740486 | 78-032 | LG 822 |
| 740890 | 34-002 | LG 821 |
| 741308 | 33-386 | LG 942 |
| 741310 | 82-013 | LG 891 |
| 741311 | 82-013 | LG 891 |
| 741316 | 76-067-0 | LG 726 |
| 742223 | 34-031 | LG 821 |
| 742512 | 34-022 | LG 822 |
| 742577 | 82-013 | LG 891 |
| 742882 | 34-001 | LG 821 |
| 88264 | 82-013 | LG 891 |
| 89844 | 92-011 | LG 490 |
| 92-6372 | 49-035 | LG 629 |
| 92-9697 | 49-035 | LG 629 |
| 92-9845 | 33-334 | LG 730 |
| 955574 | 30-957 | LG 209 |
| 98-1362 | 50-502 | LG 756 |
| 99-8595 | 33-386 | LG 942 |
| **LESCO** | | |
| 012036 | 40-132 | LG 586 |
| 017249 | 75-208 | LG 277 |
| 07200504 | 15-566 | LG 299 |
| 10710 | 45-205 | LG 228 |
| 10710 | 45-206 | LG 231 |
| 12036 | 40-132 | LG 586 |
| 12120 | 33-386 | LG 942 |
| 12596 | 30-098 | LG 206 |
| 12649 | 42-008 | LG 945 |
| 13418 | 396-716* | LG 451 |
| 13418 | 596-310* | LG 447 |
| 13418 | 93-005 | LG 447 |
| 13418 | 96-310* | LG 444 |
| 13680 | 30-947 | LG 207 |
| 14524 | 71-109 | LG 956 |
| 14524 | 71-274 | LG 956 |
| 14524 | 71-402 | LG 956 |
| 14888 | 83-282 | LG 817 |
| 14888 | 83-402 | LG 817 |
| 17249 | 75-054 | LG 312 |
| 17249 | 75-208 | LG 277 |
| 19289 | 30-946 | LG 207 |
| 21871 | 396-735* | LG 452 |
| 21871 | 596-308* | LG 548 |
| 21871 | 91-620 | LG 470 |
| 21871 | 96-308* | LG 456 |
| 21924 | 09-802 | LG 233 |
| 21946 | 75-260 | LG 312 |
| 21947 | 75-055 | LG 255 |
| 21979 | 78-680 | LG 840 |
| 23497 | 30-088 | LG 203 |
| 23498 | 30-943 | LG 206 |
| 23575 | 30-417 | LG 193 |
| 24071 | 30-089 | LG 204 |
| 3126 | 71-800 | LG 956 |
| 3139 | 71-417 | LG 957 |
| 32009 | 83-284 | LG 818 |
| 38661 | 31-230 | LG 937 |
| 50013 | 72-728 | LG 1044 |
| 50031 | 30-405 | LG 193 |
| 50036 | 30-080 | LG 205 |
| 50045 | 34-007 | LG 826 |
| 50045 | 78-021 | LG 832 |
| 50048 | 30-303 | LG 198 |
| 50056 | 30-093 | LG 206 |
| 50057 | 31-140 | LG 937 |
| 50059 | 33-628 | LG 789 |
| 50062 | 78-031 | LG 826 |
| 50065 | 30-935 | LG 201 |
| 50070 | 30-430 | LG 211 |
| 50071 | 31-150 | LG 937 |
| 50073 | 33-332 | LG 730 |
| 50076 | 34-028 | LG 821 |
| 50085 | 31-160 | LG 937 |
| 50093 | 73-351 | LG 843 |
| 50094 | 30-949 | LG 209 |
| 50098 | 30-432 | |
| 50102 | 33-388 | LG 943 |
| 50107 | 73-560 | LG 844 |
| 50107 | 73-561 | LG 843 |
| 50108 | 30-950 | LG 209 |
| 5011 | 396-735* | LG 452 |
| 5011 | 596-308* | LG 548 |
| 5011 | 91-620 | LG 470 |
| 5011 | 96-308* | LG 456 |
| 50111 | 396-735* | LG 452 |
| 50111 | 596-308* | LG 548 |
| 50111 | 91-621 | LG 563 |
| 50111 | 96-308* | LG 456 |
| 50112 | 79-724 | LG 556 |
| 50113 | 30-070 | LG 216 |
| 50122 | 73-819 | LG 843 |
| 50125 | 396-726* | LG 391 |
| 50125 | 596-344* | LG 495 |
| 50125 | 91-622 | LG 536 |
| 50125 | 96-344* | LG 536 |
| 50127 | 79-728 | LG 556 |
| 50128 | 30-301 | LG 217 |
| 50135 | 82-306 | LG 874 |
| 50140 | 396-726* | LG 391 |
| 50140 | 596-344* | LG 495 |
| 50140 | 91-623 | LG 485 |
| 50140 | 96-344* | LG 536 |
| 50150 | 82-307-0 | LG 874 |
| 50152 | 60-426 | LG 699 |
| 50164 | 82-308 | LG 874 |
| 50167 | 60-408 | LG 700 |
| 50170 | 396-727* | LG 467 |
| 50170 | 596-347* | LG 448 |
| 50170 | 91-626 | LG 552 |
| 50170 | 96-347* | LG 387 |
| 50173 | 48-205 | LG 694 |
| 50182 | 30-091 | LG 217 |
| 50186 | 78-640 | LG 835 |
| 50190 | 09-802 | LG 233 |
| 50192 | 72-500 | LG 1034 |
| 50197 | 30-954 | LG 220 |
| 50203 | 48-205 | LG 694 |
| 50206 | 72-508 | LG 1034 |
| 50215 | 78-644 | LG 835 |
| 50221 | 72-450 | LG 1037 |
| 50225 | 60-188 | LG 718 |
| 50227 | 593-600* | LG 385 |
| 50227 | 93-009 | LG 476 |
| 50233 | 48-200 | LG 694 |
| 50236 | 72-450 | LG 1037 |
| 50241 | 393-601* | LG 582 |
| 50241 | 593-601* | LG 386 |
| 50241 | 93-010 | LG 432 |
| 50241 | 93-601* | LG 432 |
| 50245 | 78-641 | LG 835 |
| 50247 | 09-801 | LG 229 |
| 50273 | 78-643 | LG 835 |
| 50295 | 48-320 | LG 238 |
| 50307 | 78-640 | LG 835 |
| 50310 | 45-078 | LG 230 |
| 50312 | 45-058 | LG 232 |
| 50313 | 72-306 | LG 1038 |
| 50327 | 45-034 | LG 224 |
| 50328 | 72-307 | LG 1038 |
| 50337 | 45-112 | LG 241 |
| 50339 | 45-127 | LG 244 |
| 50343 | 72-745 | LG 1033 |
| 50369 | 86-001 | LG 781 |
| 50371 | 45-295 | LG 232 |
| 50372 | 72-747 | LG 1036 |
| 50382 | 86-010 | LG 782 |
| 50384 | 45-259 | LG 224 |
| 50389 | 30-400 | LG 193 |
| 50393 | 30-105 | LG 179 |
| 50395 | 86-008 | LG 782 |
| 50397 | 45-220 | LG 232 |
| 50413 | 43-075 | |
| 50431 | 71-400 | LG 956 |
| 50432 | 71-500 | |
| 50433 | 71-600 | LG 956 |
| 50439 | 75-221 | LG 280 |
| 50440 | 75-240 | LG 297 |
| 50442 | 75-072 | LG 268 |
| 50443 | 75-058 | LG 255 |
| 50445 | 75-221 | LG 280 |
| 50448 | 75-222 | LG 252 |
| 50450 | 75-223 | LG 269 |
| 50454 | 75-221 | LG 280 |
| 50457 | 75-031 | LG 278 |
| 50461 | 75-101 | LG 269 |
| 50463 | 75-010 | LG 311 |
| 50464 | 75-353 | LG 319 |
| 50465 | 75-354 | LG 319 |
| 50466 | 75-068 | LG 318 |
| 50467 | 75-073 | LG 319 |
| 50468 | 75-075 | LG 322 |
| 50469 | 75-205 | LG 322 |
| 50477 | 75-043 | LG 312 |
| 50480 | 75-154 | LG 312 |
| 50486 | 83-300 | LG 819 |
| 50502 | 71-402 | LG 956 |
| 50553 | 31-240 | LG 937 |
| 50554 | 31-250 | LG 937 |
| 50555 | 31-260 | LG 937 |
| 50560 | 75-047 | LG 313 |
| 50575 | 94-022 | LG 565 |
| 50575 | 94-618* | LG 506 |
| 50576 | 30-937 | LG 202 |
| 50577 | 30-304 | LG 199 |
| 50585 | 30-085 | LG 203 |
| 50586 | 30-942 | LG 206 |
| 50622 | 30-941 | LG 219 |
| 50624 | 75-212 | LG 268 |
| 50625 | 30-404 | LG 192 |
| 50652 | 30-311 | LG 199 |
| 5070 | 396-727* | LG 467 |
| 5070 | 596-347* | LG 448 |
| 5070 | 91-626 | LG 552 |
| 5070 | 96-347* | LG 387 |
| 50805 | 30-938 | LG 202 |
| 50806 | 30-125 | LG 206 |
| 51510 | 75-130 | LG 269 |
| 51511 | 75-180 | LG 254 |
| 60116 | 396-727* | LG 467 |
| 60116 | 596-347* | LG 448 |
| 60116 | 91-628 | LG 387 |
| 60116 | 96-347* | LG 387 |
| 60559 | 75-128 | LG 253 |
| 60562 | 75-133 | LG 269 |
| 60565 | 75-113 | LG 281 |
| 60568 | 75-115 | LG 260 |
| 60574 | 75-114 | LG 281 |
| 60575 | 75-186 | LG 281 |
| 60578 | 75-155 | LG 312 |
| 60579 | 75-052 | LG 313 |
| 60592 | 78-020 | LG 825 |
| 60615 | 60-410 | LG 703 |
| 60625 | 75-188 | LG 256 |
| 6486 | 30-081 | LG 205 |
| 6525 | 30-082 | LG 205 |
| 6564 | 30-095 | LG 206 |
| 6796 | 75-165 | LG 322 |
| 68079 | 75-058 | LG 255 |
| 68093 | 15-570 | LG 299 |
| 68096 | 75-048 | LG 313 |
| 700151 | 15-571 | LG 299 |
| 705010 | 15-572 | LG 299 |
| 705375 | 15-573 | LG 299 |
| 705376 | 15-574 | LG 299 |
| 705377 | 15-575 | LG 299 |
| 705378 | 15-576 | LG 299 |
| 7225500 | 15-567 | LG 299 |
| 7243600 | 15-568 | LG 299 |
| 73974 | 40-141 | LG 585 |
| ULI65158 | 40-845* | LG 588 |
| **LIBERTY DIST.** | | |
| 754-0145 | 75-145 | LG 300 |
| 754-0151 | 75-004 | LG 301 |
| 754-0201 | 75-441 | LG 334 |
| 754-0234 | 75-441 | LG 334 |
| 754-0240 | 75-009 | LG 301 |
| 754-0241 | 75-012 | LG 301 |
| 754-0266 | 75-016 | LG 301 |
| 754-0293 | 75-018 | LG 301 |

X



* OREGON® Gator™ replacement blade

| OEM No. | OREGON | Page |
|---|---|---|
| 754-0935 | 75-092 | LG 304 |
| 954-0145 | 75-145 | LG 300 |
| 954-0145A | 75-145 | LG 300 |
| 954-0151 | 75-004 | LG 301 |
| 954-015A | 75-145 | LG 300 |
| 954-0201 | 75-441 | LG 334 |
| 954-0234 | 75-441 | LG 334 |
| 954-0240 | 75-009 | LG 301 |
| 954-0241 | 75-012 | LG 301 |
| 954-0241A | 75-012 | LG 301 |
| 954-0266 | 75-016 | LG 301 |
| 954-0266A | 75-016 | LG 301 |
| 954-0293 | 75-018 | LG 301 |
| 954-0935 | 75-092 | LG 304 |
| **LITTLE WONDER** | | |
| 124 | 45-130 | LG 232 |
| 129 | 40-409 | LG 585 |
| 177 | 75-101 | LG 269 |
| **LOWES CONTINENTAL** | | |
| 754-0145 | 75-145 | LG 300 |
| 754-0151 | 75-004 | LG 301 |
| 754-0240 | 75-009 | LG 301 |
| 754-0241 | 75-012 | LG 301 |
| 954-0145 | 75-145 | LG 300 |
| 954-0145A | 75-145 | LG 300 |
| 954-0151 | 75-004 | LG 301 |
| 954-015A | 75-145 | LG 300 |
| 954-0240 | 75-009 | LG 301 |
| 954-0241 | 75-012 | LG 301 |
| 954-0241A | 75-012 | LG 301 |
| **MACY'S** | | |
| 754-0935 | 75-092 | LG 304 |
| 954-0935 | 75-092 | LG 304 |
| **MANCO** | | |
| 1492 | 48-043 | |
| 5959 | 15-577 | LG 300 |
| **MAN-SPRINGFIELD** | | |
| 754-0145 | 75-145 | LG 300 |
| 754-0151 | 75-004 | LG 301 |
| 954-0145 | 75-145 | LG 300 |
| 954-0145A | 75-145 | LG 300 |
| 954-0151 | 75-004 | LG 301 |
| 954-015A | 75-145 | LG 300 |
| **MARTIN WHEEL** | | |
| ** | 71-104 | LG 956 |
| 1008-2TRS-I | 70-339 | LG 959 |
| 1008-4TRS-I | 70-370 | LG 961 |
| 1012-4TRS-I | 70-373 | LG 961 |
| 104-OF | 72-301 | LG 1037 |
| 110 | 72-410 | LG 1030 |
| 110-OF | 72-446 | LG 1030 |
| 110-OF-SC-HD | 72-747 | LG 1036 |
| 2612-4TF-I | 68-210 | LG 962 |
| 3544DC-SN | 72-728 | LG 1044 |
| 356-2STT-I | 70-356 | LG 958 |
| 35A60 | 48-048 | LG 725 |
| 35A72 | 48-049 | LG 725 |
| 408-2STT-I | 70-358 | LG 958 |
| 408DC6-58BB | 72-420 | LG 1047 |
| 41A54 | 48-051 | LG 725 |
| 506-2STT-I | 70-376 | LG 958 |
| 5305-HD | 72-316 | LG 1042 |
| 53-673 | 48-048 | LG 725 |
| 615 | 72-406 | LG 1029 |
| 615-OF | 72-427 | LG 1029 |
| 615-OFLBC-HD | 72-500 | LG 1034 |
| 615P-OF | 72-106 | LG 1029 |
| 615-R | 72-406 | LG 1029 |
| 6305-HD | 72-316 | LG 1042 |
| 656-2TR-A | 70-316 | LG 959 |
| 6564TR-C | 70-317 | LG 959 |
| 658-2STT-I | 70-375 | LG 958 |
| 715 | 72-407 | LG 1029 |
| 7155P-916-OF | 72-117 | LG 1036 |
| 715-715-OF | 72-510 | LG 1036 |
| 715-716-OF | 72-510 | LG 1036 |
| 715-OF | 72-430 | LG 1034 |
| 715P-916-OF | 72-117 | LG 1036 |
| 715P-OF | 72-107 | LG 1029 |
| 715-R | 72-407 | LG 1029 |
| 758-2TR-I | 70-330 | LG 959 |
| 758-4TF-I | 68-204 | LG 962 |
| 758-4TR-I | 70-367 | LG 961 |
| 875 | 72-408 | LG 1029 |
| 875-716-OF | 72-450 | LG 1037 |
| 875HD-OF-BC | 72-746 | LG 1032 |
| 875-OF | 72-437 | LG 1030 |
| 875-OF-LB | 72-436 | LG 1034 |
| 875-OFLBC-HD | 72-500 | LG 1034 |
| 875-OF-LB-HD | 72-508 | LG 1034 |
| 875-OF-SC-HD | 72-746 | LG 1032 |
| 875-OF-SM | 72-436 | LG 1034 |
| 875P-OF | 72-108 | LG 1031 |
| 875-R | 72-408 | LG 1029 |
| 9354DB-BC | 72-796 | LG 1043 |
| 9354DB-SCAG | 72-795 | LG 1044 |
| 9354-U275-SM | 70-701 | LG 964 |
| 95340NA | 45-014 | LG 225 |
| 975P-916-OF | 72-109 | LG 1037 |
| 995-DD-OF | 72-442 | LG 1037 |
| BK-34-CC | 45-205 | LG 228 |
| BK-I-CC | 45-002 | LG 237 |
| FB10131 | 48-007 | LG 1039 |
| FF9354 | 70-701 | LG 964 |
| IBB-12 | 45-012 | LG 224 |
| IBB-34 | 45-034 | LG 224 |
| IBB-58 | 45-058 | LG 232 |
| IC35-100F | 32-103 | LG 676 |
| IC35-10F | 32-101 | LG 676 |
| IC-35CL | 02-188 | LG 676 |
| IC-35OL | 02-176 | LG 676 |
| IC40-100F | 32-106 | LG 676 |
| IC40-10F | 32-105 | LG 676 |
| IC-40CL | 02-190 | LG 676 |
| IC-40OL | 02-177 | LG 676 |
| IC-410L | 02-178 | LG 676 |
| IC41-100F | 32-108 | LG 676 |
| IC41-10F | 32-107 | LG 676 |
| IC-41CL | 02-191 | LG 676 |
| IC-420L | 02-179 | LG 676 |
| IC42-10F | 32-111 | LG 676 |
| IC-42CL | 02-192 | LG 676 |
| IC-430L | 02-180 | LG 676 |
| IC43-10F | 32-112 | LG 676 |
| IC-43CL | 02-194 | LG 676 |
| LM11910 | 45-206 | LG 231 |
| LM11949 | 45-205 | LG 228 |
| MT10-11RC35 | 84-002 | LG 675 |
| MT10-325 | 84-009 | LG 675 |
| MT12-10RC41 | 84-001 | LG 675 |
| MT12-12RC35 | 84-004 | LG 675 |
| MT12-325 | 84-006 | LG 675 |
| PL530-JD | 72-094 | LG 1042 |
| PL538-JD | 72-306 | LG 1038 |
| PL538-OF | 72-318 | LG 1042 |
| PL638-JD | 72-307 | LG 1038 |
| PL-8W | 78-680 | LG 840 |
| RH-64DM-4-LB | 72-804 | LG 1047 |
| RT-3414 | 45-014 | LG 225 |
| SMBB-12 | 45-038 | LG 224 |
| SMBB-34 | 45-010 | LG 238 |
| SMBB-34 | 45-234 | LG 224 |
| SMBB-58 | 45-047 | LG 241 |
| SMBB-58 | 45-258 | LG 224 |
| SSBB-34 | 45-000 | LG 237 |
| T1008 | 71-407 | LG 956 |
| T1009 | 71-410 | LG 956 |
| T1012 | 71-408 | LG 957 |
| T1110 | 71-412 | LG 956 |
| T1208 | 71-098 | LG 956 |
| T1209 | 71-097 | LG 956 |
| T254 | 71-109 | LG 956 |
| T254 | 71-274 | LG 956 |
| T254P | 71-109 | LG 956 |
| T254-P | 71-274 | LG 956 |
| T2612 | 71-283 | LG 957 |
| T305 | 71-277 | LG 956 |
| T308 | 71-110 | LG 956 |
| T354 | 71-400 | LG 956 |
| T354-13 | 71-276 | LG 956 |
| T354P | 71-275 | LG 956 |
| T355 | 71-500 | |
| T355-13 | 71-278 | |
| T356 | 71-600 | LG 956 |
| T356-13 | 71-610 | LG 956 |
| T405 | 71-403 | LG 956 |
| T405 | 71-511 | LG 956 |
| T405-87 | 71-511 | LG 956 |
| T408 | 71-800 | LG 956 |
| T408-87 | 71-801 | LG 956 |
| T412 | 71-417 | LG 957 |
| T452 | 71-273 | LG 957 |
| T452 | 71-418 | LG 957 |
| T456 | 71-404 | |
| T4808-87 | 71-103 | LG 956 |
| T506 | 71-096 | LG 956 |
| T506-87 | 71-101 | LG 956 |
| T606-13 | 71-102 | LG 956 |
| T656 | 71-250 | LG 956 |
| T656-87 | 71-280 | LG 956 |
| T658 | 71-816 | LG 956 |
| T708 | 71-409 | LG 956 |
| T8010 | 71-411 | LG 956 |
| T810 | 71-100 | LG 956 |
| T8512 | 71-105 | LG 957 |
| T858 | 71-104 | LG 956 |
| T8658 | 71-406 | LG 956 |
| TC-1010 | 67-002 | LG 965 |
| TC-1012-2 | 67-015 | LG 965 |
| TC-1012-4 | 67-011 | LG 965 |
| TC-1212 | 67-019 | LG 965 |
| TC-354 | 67-012 | LG 965 |
| TC-356 | 67-020 | LG 965 |
| TC-356-SH | 67-009 | LG 965 |
| TC-408 | 67-013 | LG 965 |
| TC-408-SH | 67-008 | LG 965 |
| TC-456 | 67-003 | LG 965 |
| TC-506 | 67-010 | LG 965 |
| TC-506-SH | 67-007 | LG 965 |
| TC-658 | 67-001 | LG 965 |
| TC-658-SH | 67-004 | LG 965 |
| TC-810 | 67-017 | LG 965 |
| TC820 | 67-017 | LG 965 |
| TC8512-2 | 67-013 | LG 965 |
| TC-8512-2 | 67-014 | LG 965 |
| TC-858 | 67-005 | LG 965 |
| TC958 | 67-018 | LG 965 |
| TR-412 | 71-001 | LG 957 |
| TR-413 | 71-002 | LG 957 |
| TU16HD | 71-107 | LG 957 |
| TU20 | 71-106 | LG 957 |
| TU20HD | 71-108 | LG 957 |
| ZP1102G-202 | 72-449 | LG 1030 |
| ZP61-HD-BC | 72-745 | LG 1033 |
| **MARUYAMA** | | |
| 216062 | 40-141 | LG 585 |
| 261598 | 55-206 | LG 209 |
| 261628 | 31-913 | LG 930 |
| 261696 | 07-162 | LG 763 |
| 261874 | 07-084 | LG 768 |
| 263800 | 55-127 | LG 772 |
| 265752 | 07-097 | LG 764 |
| 267328 | 07-094 | LG 778 |
| 268062 | 07-098 | LG 765 |
| 597949 | 07-099 | LG 764 |
| 69601552631 | 40-141 | LG 585 |
| 840084 | 40-141 | LG 585 |
| **MASSEY FERGUSON** | | |
| 1023-556-M91 | 34-031 | LG 821 |
| 1024-515-MI | 34-023 | LG 822 |
| 1030-049-MI | 34-008 | LG 821 |
| 1035-991-M1 | 30-081 | LG 205 |
| 1040-013-MI | 34-030 | LG 821 |
| 1040-014-MI | 34-024 | LG 822 |
| 1044-627M | 30-093 | LG 206 |
| 11913 | 599-133* | LG 422 |
| 11913 | 96-133* | LG 422 |
| 11914 | 599-133* | LG 422 |
| 11914 | 96-133* | LG 422 |
| 11949 | 599-133* | LG 422 |
| 11949 | 96-133* | LG 422 |
| 1704100 | 590-685* | LG 540 |
| 1704100 | 90-685* | LG 540 |
| 1704100 | 91-705 | LG 540 |
| 1704101 | 91-701 | LG 545 |
| 1704101 | 96-654* | LG 511 |
| 1704101A | 91-701 | LG 545 |
| 1704101A | 96-654* | LG 511 |
| 1704101ASM | 91-701 | LG 545 |
| 1704101ASM | 96-654* | LG 511 |
| 1704856ASM | 590-685* | LG 540 |
| 1704856ASM | 90-685* | LG 540 |
| 1704856ASM | 91-723 | LG 508 |
| 1716695ASM | 91-701 | LG 545 |
| 1716695ASM | 96-654* | LG 511 |
| 1716697ASM | 390-698* | LG 542 |
| 1716697ASM | 590-698* | LG 510 |
| 1716697ASM | 90-698* | LG 510 |
| 1726453ASM | 390-698* | LG 542 |
| 1726453ASM | 590-698* | LG 510 |
| 1726453ASM | 90-698* | LG 510 |
| 1726453ASM | 91-706 | LG 550 |
| 1737228AYP | 599-132* | LG 522 |
| 1737228AYP | 99-132 | LG 539 |
| 1737228BZYP | 599-132* | LG 522 |
| 1737228BZYP | 99-132 | LG 539 |
| 1737252 | 599-133* | LG 422 |
| 1737252 | 96-133* | LG 422 |
| 1737252 | 99-133 | LG 542 |
| 1737252BZYP | 599-133* | LG 422 |
| 1737252BZYP | 96-133* | LG 422 |
| 1737252BZYP | 99-133 | LG 542 |
| 1737816BM | 391-605* | LG 544 |
| 1737816BM | 91-605 | LG 544 |
| 1737816BMYP | 391-605* | LG 544 |
| 1737816BMYP | 91-605 | LG 544 |
| 1757303YP | 391-606* | LG 547 |
| 1757303YP | 91-606 | LG 509 |
| 1758878BMYP | 391-607* | LG 511 |
| 1758878BMYP | 91-607 | LG 544 |
| 3020-047-MI | 34-042 | LG 823 |
| 350-396X1 | 45-259 | LG 224 |
| 5101755S | 396-727* | LG 467 |
| 5101755S | 596-347* | LG 448 |
| 5101755S | 91-209 | LG 552 |
| 5101755S | 96-347* | LG 387 |
| 5101755SYP | 396-727* | LG 467 |
| 5101755SYP | 596-347* | LG 448 |
| 5101755SYP | 91-209 | LG 552 |
| 5101755SYP | 96-347* | LG 387 |
| 5101986SYP | 396-716* | LG 451 |
| 5101986SYP | 596-310* | LG 447 |

X

* OREGON® Gator™ replacement blade

# 2019 OEM X-Reference

| OEM No. | OREGON | Page |
|---|---|---|
| **MASSEY FERGUSON** | | |
| 5101986SYP | 91-313 | LG 494 |
| 5101986SYP | 96-310* | LG 444 |
| 5102227S | 396-731* | LG 427 |
| 5102227S | 91-609 | LG 469 |
| 5104045SYP | 396-727* | LG 467 |
| 5104045SYP | 596-347* | LG 448 |
| 5104045SYP | 91-308 | LG 467 |
| 5104045SYP | 96-347* | LG 387 |
| 511450-MI | 34-019 | LG 821 |
| 515382M1 | 15-578 | LG 300 |
| 515383M1 | 15-579 | LG 300 |
| 519000-MI | 34-029 | LG 821 |
| 527739-MI | 34-017 | LG 821 |
| 539118672 | 599-133* | LG 422 |
| 539118672 | 96-133* | LG 422 |
| 539118673 | 599-133* | LG 422 |
| 539118673 | 96-133* | LG 422 |
| 754-0935 | 75-092 | LG 304 |
| 831-054M1 | 45-206 | LG 231 |
| 831-055M1 | 45-205 | LG 228 |
| 833411M-1 | 45-295 | LG 232 |
| 834336-MI | 34-034 | LG 821 |
| 954-0935 | 75-092 | LG 304 |
| N1568 | 45-259 | LG 224 |
| **MAX TORQUE** | | |
| TCBLT | 84-028 | LG 675 |
| TCBLTL | 84-029 | LG 675 |
| TCDNS34 | 84-030 | LG 675 |
| TCDRS34 | 84-031 | LG 675 |
| **MAY COMPANY** | | |
| 754-0935 | 75-092 | LG 304 |
| 954-0935 | 75-092 | LG 304 |
| **MCCULLOCH** | | |
| 102115 | 56-003 | LG 687 |
| 105603 | 56-003 | LG 687 |
| 110590 | 56-003 | LG 687 |
| 110676 | 04-007 | LG 686 |
| 110907 | 56-002 | LG 687 |
| 110950 | 56-003 | LG 687 |
| 120029 | 04-006-0 | LG 686 |
| 213883 | 55-227 | LG 191 |
| 214224 | 55-218 | LG 209 |
| 214226 | 55-214 | LG 209 |
| 215708 | 07-009 | LG 762 |
| 215803 | 55-227 | LG 191 |
| 216685 | 55-212 | LG 209 |
| 216736 | 49-810 | LG 612 |
| 216905 | 55-218 | LG 209 |
| 216985 | 07-200 | LG 778 |
| 217075 | 49-832 | LG 611 |
| 217076 | 49-806 | LG 611 |
| 217077 | 49-832 | LG 611 |
| 217078 | 49-834 | LG 611 |
| 217080 | 49-834 | LG 611 |
| 217085 | 49-834 | LG 611 |
| 217087 | 49-812 | LG 612 |
| 217087 | 49-834 | LG 611 |
| 217090 | 49-832 | LG 611 |
| 217091 | 49-832 | LG 611 |
| 217109 | 49-816 | LG 612 |
| 217111 | 49-816 | LG 612 |
| 217387 | 07-010 | LG 764 |
| 219764 | 55-807 | LG 994 |
| 223077 | 49-020 | LG 631 |
| 223740 | 55-804-1 | LG 994 |
| 224460-00 | 49-812 | LG 612 |
| 300149 | 55-326 | LG 1021 |
| 30014901 | 55-326 | LG 1021 |
| 300149-01 | 55-326 | LG 1021 |
| 300457 | 49-816 | LG 612 |
| 300736 | 55-743 | LG 988 |
| 301011 | 07-009 | LG 762 |
| 301272 | 40-144 | LG 587 |
| 301272-00 | 40-144 | LG 587 |
| 49422 | 07-200 | LG 778 |
| 61460 | 55-218 | LG 209 |
| 63932 | 07-204 | LG 778 |
| 64848 | 07-009 | LG 762 |
| 67481 | 49-834 | LG 611 |
| 67491 | 49-021 | LG 629 |
| 68107 | 49-834 | LG 611 |
| 68656 | 56-002 | LG 687 |
| 69506 | 55-333 | LG 633 |
| 69508 | 49-834 | LG 611 |
| 69922 | 55-212 | LG 209 |
| 83764 | 49-834 | LG 611 |
| 83768 | 49-834 | LG 611 |
| 83772 | 49-834 | LG 611 |
| 83778 | 49-834 | LG 611 |
| 84929 | 56-002 | LG 687 |
| 85987 | 49-834 | LG 611 |
| 88620 | 49-834 | LG 611 |
| 90658 | 56-002 | LG 687 |
| 91460 | 55-218 | LG 209 |
| 91982 | 56-003 | LG 687 |
| 91982-1 | 56-003 | LG 687 |
| 92420 | 55-212 | LG 209 |
| 93720 | 07-200 | LG 778 |
| 94282 | 49-021 | LG 629 |
| 94299 | 49-806 | LG 611 |
| 94362 | 56-003 | LG 687 |
| 94774 | 49-816 | LG 612 |
| 94775 | 49-812 | LG 612 |
| 95213 | 55-214 | LG 209 |
| **MCLANE** | | |
| 1013B | 60-009 | LG 709 |
| 1060 | 75-120 | LG 300 |
| 1063A | 78-677 | LG 839 |
| 2036 | 45-047 | LG 241 |
| 2036 | 45-242 | LG 243 |
| 2058 | 75-101 | LG 269 |
| 2059 | 40-130 | LG 586 |
| 2059-10 | 40-130 | LG 586 |
| 2059HD | 40-502 | LG 586 |
| 4060 | 75-123 | LG 300 |
| 7102 | 15-580 | LG 300 |
| **MCNEW CO** | | |
| 754-0935 | 75-092 | LG 304 |
| 954-0935 | 75-092 | LG 304 |
| **MID-STATES** | | |
| 754-0145 | 75-145 | LG 300 |
| 754-0151 | 75-004 | LG 301 |
| 754-0178 | 75-179 | LG 310 |
| 754-0194 | 75-090 | LG 301 |
| 754-0201 | 75-441 | LG 334 |
| 754-0230 | 75-008 | LG 301 |
| 754-0234 | 75-441 | LG 334 |
| 754-0240 | 75-009 | LG 301 |
| 754-0241 | 75-012 | LG 301 |
| 754-0266 | 75-016 | LG 301 |
| 754-0293 | 75-018 | LG 301 |
| 754-0935 | 75-092 | LG 304 |
| 754182 | 75-208 | LG 277 |
| 954-0145 | 75-145 | LG 300 |
| 954-0145A | 75-145 | LG 300 |
| 954-0151 | 75-004 | LG 301 |
| 954-015A | 75-145 | LG 300 |
| 954-0178 | 75-179 | LG 310 |
| 954-0194 | 75-090 | LG 301 |
| 954-0201 | 75-441 | LG 334 |
| 954-0230 | 75-008 | LG 301 |
| 954-0234 | 75-441 | LG 334 |
| 954-0240 | 75-009 | LG 301 |
| 954-0241 | 75-012 | LG 301 |
| 954-0241A | 75-012 | LG 301 |
| 954-0266 | 75-016 | LG 301 |
| 954-0266A | 75-016 | LG 301 |
| 954-0293 | 75-018 | LG 301 |
| 954-0935 | 75-092 | LG 304 |
| **MITSUBISHI** | | |
| KF05011DA | 07-026 | LG 772 |
| KS02037AA002 | 31-105 | LG 934 |
| TR64961 | 33-516 | LG 866 |
| **MONTGOMERY WARD** | | |
| 26344 | 75-120 | LG 300 |
| 754-0145 | 75-145 | LG 300 |
| 754-0151 | 75-004 | LG 301 |
| 754-0194 | 75-090 | LG 301 |
| 754-0201 | 75-441 | LG 334 |
| 754-0230 | 75-008 | LG 301 |
| 754-0234 | 75-441 | LG 334 |
| 754-0240 | 75-009 | LG 301 |
| 754-0241 | 75-012 | LG 301 |
| 754-0266 | 75-016 | LG 301 |
| 754-0293 | 75-018 | LG 301 |
| 754-0935 | 75-092 | LG 304 |
| 954-0145 | 75-145 | LG 300 |
| 954-0145A | 75-145 | LG 300 |
| 954-0151 | 75-004 | LG 301 |
| 954-015A | 75-145 | LG 300 |
| 954-0194 | 75-090 | LG 301 |
| 954-0201 | 75-441 | LG 334 |
| 954-0230 | 75-008 | LG 301 |
| 954-0234 | 75-441 | LG 334 |
| 954-0240 | 75-009 | LG 301 |
| 954-0241 | 75-012 | LG 301 |
| 954-0241A | 75-012 | LG 301 |
| 954-0266 | 75-016 | LG 301 |
| 954-0266A | 75-016 | LG 301 |
| 954-0293 | 75-018 | LG 301 |
| 954-0935 | 75-092 | LG 304 |
| **MOORE-HANDLEY** | | |
| 754-0151 | 75-004 | LG 301 |
| 954-0151 | 75-004 | LG 301 |
| **MTD** | | |
| 00030779 | 15-581 | LG 273 |
| 00030779 | 15-598 | LG 301 |
| 01001805 | 91-144 | LG 454 |
| 01001805 | 96-677* | LG 372 |
| 01002810 | 198-049 | LG 518 |
| 01002810 | 598-631* | LG 390 |
| 01002810 | 98-631* | LG 390 |
| 01003280 | 91-144 | LG 454 |
| 01003280 | 96-677* | LG 372 |
| 01003805 | 91-144 | LG 454 |
| 01003805 | 96-677* | LG 372 |
| 01004719 | 91-144 | LG 454 |
| 01004719 | 96-677* | LG 372 |
| 01004719P | 91-144 | LG 454 |
| 01004719P | 96-677* | LG 372 |
| 01005337P | 596-351* | LG 408 |
| 01005337P | 96-351* | LG 408 |
| 01005337P | 98-091 | LG 516 |
| 01005338 | 596-300* | LG 519 |
| 01005338 | 96-300* | LG 519 |
| 01005338 | 98-071 | LG 411 |
| 01005338P | 596-300* | LG 519 |
| 01005338P | 96-300* | LG 519 |
| 01005338P | 98-071 | LG 411 |
| 01007522 | 396-815* | LG 521 |
| 01010168 | 592-015* | LG 515 |
| 01010168 | 92-015 | LG 407 |
| 01010168-0637 | 592-015* | LG 515 |
| 01010168-0637 | 92-015 | LG 407 |
| 01010168-X | 592-015* | LG 515 |
| 01010168-X | 92-015 | LG 407 |
| 02005018-X | 596-351* | LG 408 |
| 02005018-X | 96-351* | LG 408 |
| 02005019 | 596-300* | LG 519 |
| 02005019 | 96-300* | LG 519 |
| 02005019 | 98-071 | LG 411 |
| 02005019-X | 596-300* | LG 519 |
| 02005019-X | 96-300* | LG 519 |
| 02005020 | 596-373* | LG 512 |
| 02005020 | 98-080 | LG 512 |
| 0301-000 | 98-019 | LG 516 |
| 031203 | 98-019 | LG 516 |
| 05002 | 73-100 | LG 850 |
| 05002-0637 | 73-100 | LG 850 |
| 05080A | 76-073-0 | LG 726 |
| 05080AP | 76-073-0 | LG 726 |
| 05571 | 73-020 | LG 850 |
| 07714 | 98-019 | LG 516 |
| 08253B | 45-108 | LG 894 |
| 09322 | 44-364 | LG 728 |
| 09966 | 81-012 | LG 802 |
| 1004719-0637 | 91-144 | LG 454 |
| 1004719-0637 | 96-677* | LG 372 |
| 1005337 | 596-351* | LG 408 |
| 1005337 | 96-351* | LG 408 |
| 1005337 | 98-091 | LG 516 |
| 1005378 | 15-583 | LG 273 |
| 1008616 | 596-373* | LG 512 |
| 1008616 | 98-080 | LG 512 |
| 10769 | 65-220 | LG 340 |
| 14608-0637 | 76-018 | LG 938 |
| 15296 | 45-135 | LG 894 |
| 15296A | 45-135 | LG 894 |
| 1652-030 | 45-095 | LG 855 |
| 1717048 | 33-335 | LG 730 |
| 1726547 | 33-335 | LG 730 |
| 1731273 | 75-148 | LG 300 |
| 1733439 | 75-148 | LG 300 |
| 1740056 | 33-335 | LG 730 |
| 1751569 | 33-335 | LG 730 |
| 17584 | 76-019 | LG 938 |
| 17585 | 76-021 | LG 938 |
| 17664-0637 | 76-020 | LG 802 |
| 2005018 | 596-351* | LG 408 |
| 2005018 | 96-351* | LG 408 |
| 2005018 | 98-091 | LG 516 |
| 30779 | 15-581 | LG 273 |
| 30779 | 15-598 | LG 301 |
| 31203 | 98-019 | LG 516 |
| 3999 | 45-019 | LG 239 |
| 4720610 | 198-058 | LG 517 |
| 4720610 | 598-628* | LG 517 |
| 4720610 | 98-628* | LG 389 |
| 490-100-M084 | 198-049 | LG 518 |
| 490-100-M084 | 598-631* | LG 390 |
| 490-100-M084 | 98-631* | LG 390 |
| 490-100-M087 | 98-050 | LG 521 |
| 490-100-M088 | 98-066 | LG 409 |
| 490-100-M115 | 98-068 | LG 389 |
| 490-110-C119 | 98-090 | LG 519 |
| 490-110-C129 | 591-635* | LG 411 |
| 490-110-C129 | 91-058 | LG 411 |
| 490-110-C129 | 91-635* | LG 411 |
| 490-110-C131 | 96-401* | LG 404 |
| 490-110-C131 | 98-096 | LG 404 |
| 490-110-M108 | 598-629* | LG 575 |
| 490-110-M108 | 98-093 | LG 411 |
| 490-110-M108 | 98-629* | LG 412 |
| 490-110-M111 | 98-044 | LG 409 |
| 490-110-M112 | 598-600* | LG 519 |
| 490-110-M112 | 98-499 | LG 519 |
| 490-110-M112 | 98-600* | LG 85 |
| 490-110-M114 | 198-058 | LG 517 |
| 490-110-M114 | 598-628* | LG 517 |

X



* OREGON® Gator™ replacement blade

## MTD

| OEM No. | OREGON | Page |
|---|---|---|
| 490-110-M114 | 98-628* | LG 389 |
| 490-110-M115 | 198-059 | LG 403 |
| 490-110-M115 | 598-629* | LG 575 |
| 490-110-M115 | 98-629* | LG 412 |
| 490-110-M117 | 398-672* | LG 515 |
| 490-110-M117 | 598-672* | LG 515 |
| 490-110-M117 | 98-072 | LG 408 |
| 490-110-M117 | 98-672* | LG 408 |
| 5002 | 73-100 | LG 850 |
| 509-0891 | 80-746 | LG 852 |
| 51-2751 | 72-024 | LG 1035 |
| 618-0111 | 82-512 | LG 895 |
| 618-0112 | 82-511 | LG 895 |
| 618-0112 | 85-053 | LG 907 |
| 618-0116 | 82-512 | LG 895 |
| 618-0116A | 82-512 | LG 895 |
| 618-0117 | 82-511 | LG 895 |
| 618-0138 | 82-513-2 | LG 896 |
| 618-0138A | 82-513-2 | LG 896 |
| 618-0142 | 82-513-2 | LG 896 |
| 618-0142A | 82-513-2 | LG 896 |
| 618-0240 | 82-515 | LG 896 |
| 618-0240A | 82-515 | LG 896 |
| 618-0241 | 82-516 | LG 896 |
| 618-0282 | 73-827 | |
| 618-0282A | 73-827 | |
| 618-0282B | 73-827 | |
| 618-0282C | 73-827 | |
| 618-0282D | 73-827 | |
| 618-0282E | 73-827 | |
| 618-0324A | 82-051 | LG 898 |
| 618-04125A | 82-403 | LG 879 |
| 618-04197A | 82-051 | LG 898 |
| 618-0427 | 82-051 | LG 898 |
| 618-0427A | 82-051 | LG 898 |
| 618-0427C | 82-051 | LG 898 |
| 618-0427D | 82-051 | LG 898 |
| 618-0430 | 82-515 | LG 896 |
| 618-0430A | 82-515 | LG 896 |
| 618-0430B | 82-515 | LG 896 |
| 618-0431 | 82-516 | LG 896 |
| 618-04394 | 82-406 | LG 880 |
| 618-04461 | 82-407 | LG 880 |
| 618-04474 | 82-054 | LG 898 |
| 618-04474A | 82-054 | LG 898 |
| 618-04495 | 82-054 | LG 898 |
| 618-04495A | 82-054 | LG 898 |
| 618-04822 | 82-058 | LG 898 |
| 618-04822A | 82-058 | LG 898 |
| 618-04825B | 82-043 | LG 899 |
| 618-04889 | 82-058 | LG 898 |
| 618-04889A | 82-058 | LG 898 |
| 618-04950 | 82-058 | LG 898 |
| 618-05016 | 82-043 | LG 899 |
| 618-0565 | 82-517 | LG 896 |
| 618-0574 | 82-517 | LG 896 |
| 618-0594 | 82-520 | LG 897 |
| 618-0595 | 82-518 | LG 897 |
| 618-0596 | 82-520 | LG 897 |
| 618-0596B | 82-520 | LG 897 |
| 618-0596C | 82-520 | LG 897 |
| 618-0659 | 82-408 | LG 878 |
| 618-0671 | 82-519 | LG 897 |
| 618-0671B | 82-519 | LG 897 |
| 618-3129A | 82-411 | LG 878 |
| 618-3129B | 82-411 | LG 878 |
| 618-3129C | 82-411 | LG 878 |
| 618-3167 | 82-044 | LG 879 |
| 634-0021A | 72-112 | LG 1034 |
| 656-3045 | 34-066 | LG 832 |
| 683-0055 | 76-100 | LG 939 |
| 683-055 | 76-100 | LG 939 |
| 684-04025 | 73-050 | LG 846 |
| 684-04025A | 73-050 | LG 846 |
| 684-04027 | 73-050 | LG 846 |
| 684-04027A | 73-050 | LG 846 |
| 706-14240 | 73-017 | LG 848 |
| 706-15686-00-11 | 73-050 | LG 846 |
| 706-15687 | 73-016 | LG 846 |
| 706-15687-01 | 73-016 | LG 846 |
| 706-15688 | 73-016 | LG 846 |
| 706-15711 | 75-148 | LG 300 |
| 706-15944-00-10 | 73-020 | LG 850 |
| 706-16276 | 45-019 | LG 239 |
| 706-16835 | 55-800 | LG 934 |
| 706-18796 | 45-019 | LG 239 |
| 710-0890 | 80-743 | LG 852 |
| 710-0890A | 80-743 | LG 852 |
| 710-0891 | 80-746 | LG 852 |
| 712-0417 | 04-015 | LG 899 |
| 712-0417A | 04-015 | LG 899 |
| 712-0417AP | 04-015 | LG 899 |
| 713-0132 | 02-190 | LG 676 |
| 713-0139 | 02-188 | LG 676 |
| 713-0154 | 02-193 | LG 676 |
| 713-0723 | 02-191 | LG 676 |
| 714-0138 | 02-531 | |
| 714-04040 | 02-901 | LG 853 |
| 714-0868 | 02-535 | |
| 717-04080 | 33-126-1 | LG 736 |
| 717-04080 | 33-139 | LG 736 |
| 717-04174 | 33-134 | LG 736 |
| 717-04174A | 33-134 | LG 736 |
| 717-04183 | 33-255 | LG 736 |
| 717-0678 | 76-110 | LG 726 |
| 717-0900 | 82-501 | LG 894 |
| 717-0900A | 82-501 | LG 894 |
| 717-0906 | 82-500 | LG 893 |
| 717-0906A | 82-500 | LG 893 |
| 717-0912 | 82-502 | LG 894 |
| 717-0913 | 82-503 | LG 895 |
| 717-0949 | 33-110 | LG 735 |
| 717-1425 | 84-014 | LG 856 |
| 717-1434 | 33-110 | LG 735 |
| 717-1459 | 33-112 | LG 735 |
| 717-1554 | 51-014 | LG 941 |
| 717-1708 | 33-125-1 | LG 736 |
| 7171709 | 33-139 | LG 736 |
| 717-1709 | 33-126-1 | LG 736 |
| 717-1709 | 33-139 | LG 736 |
| 719-0949 | 33-110 | LG 735 |
| 720-0241 | 81-012 | LG 802 |
| 720-04072A | 81-012 | LG 802 |
| 721-0286 | 73-016 | LG 846 |
| 721-0287 | 73-016 | LG 846 |
| 723-0156 | 45-104 | LG 939 |
| 723-0179 | 45-114 | LG 938 |
| 723-0383 | 42-555 | LG 803 |
| 723-0383 | 42-557 | LG 803 |
| 723-0405 | 83-014 | LG 819 |
| 723-0448A | 45-132 | LG 939 |
| 723-0448AP | 45-132 | LG 939 |
| 723-0471 | 42-005 | LG 744 |
| 723-3018 | 45-104 | LG 939 |
| 723-3018 | 45-111 | LG 939 |
| 725-0201 | 42-008 | LG 945 |
| 725-0267 | 33-386 | LG 942 |
| 725-0267A | 33-386 | LG 942 |
| 725-0267AP | 33-386 | LG 942 |
| 725-0268 | 33-240 | LG 948 |
| 725-04019 | 33-106 | LG 943 |
| 725-04175 | 33-083 | LG 947 |
| 725-04228 | 33-074 | LG 944 |
| 725-04258 | 33-083 | LG 947 |
| 725-0426 | 33-330 | LG 729 |
| 725-0426 | 33-331 | LG 730 |
| 725-0530 | 33-330 | LG 729 |
| 725-0530 | 33-331 | LG 730 |
| 725-0530 | 33-337 | LG 730 |
| 725-0771 | 33-330 | LG 729 |
| 725-0771 | 33-331 | LG 730 |
| 725-0771 | 33-337 | LG 730 |
| 725-0803B | 33-382 | LG 947 |
| 725-0803C | 33-382 | LG 947 |
| 725-1396 | 33-399 | LG 944 |
| 725-1426 | 33-330 | LG 729 |
| 725-1426 | 33-331 | LG 730 |
| 725-1426 | 33-335 | LG 730 |
| 725-1426 | 33-337 | LG 730 |
| 725-1426A | 33-331 | LG 730 |
| 725-1426A | 33-335 | LG 730 |
| 725-1426P | 33-335 | LG 730 |
| 725-1648 | 33-242 | LG 729 |
| 725-1657 | 33-084 | LG 948 |
| 725-1657A | 33-084 | LG 948 |
| 725-1660 | 33-089 | LG 946 |
| 725-1741 | 33-376 | LG 942 |
| 725-1745 | 33-099 | LG 946 |
| 725-3163 | 33-152 | LG 942 |
| 725-3163P | 33-152 | LG 942 |
| 725-3164A | 33-026 | LG 947 |
| 725-3164AP | 33-026 | LG 947 |
| 725-3164s | 33-026 | LG 947 |
| 725-3166 | 33-019 | LG 948 |
| 726-0106 | 04-721 | |
| 727-0162 | 83-300 | LG 819 |
| 731-0374 | 45-113 | LG 242 |
| 731-04869 | 73-833 | LG 855 |
| 731-04869A | 73-833 | LG 855 |
| 731-04894 | 73-831 | LG 856 |
| 731-04894A | 73-831 | LG 856 |
| 731-04894B | 73-831 | LG 856 |
| 731-04894C | 73-831 | LG 856 |
| 731-04894D | 73-831 | LG 856 |
| 731-04896 | 73-829 | LG 856 |
| 731-04896A | 73-829 | LG 856 |
| 731-04896B | 73-829 | LG 856 |
| 731-04913 | 73-828 | LG 856 |
| 731-05632 | 33-256 | LG 946 |
| 731-06451 | 73-830 | LG 856 |
| 731-0722 | 73-017 | LG 848 |
| 731-0778 | 73-017 | LG 848 |
| 731-0780 | 73-016 | LG 846 |
| 731-07804 | 73-016 | LG 846 |
| 731-0780A | 73-016 | LG 846 |
| 731-0781 | 73-016 | LG 846 |
| 731-07812 | 73-016 | LG 846 |
| 731-0781A | 73-016 | LG 846 |
| 731-0782 | 73-016 | LG 846 |
| 731-0782A | 73-016 | LG 846 |
| 731-0812 | 73-017 | LG 848 |
| 731-0823 | 60-008 | LG 703 |
| 731-0851 | 73-832 | LG 855 |
| 731-0851A | 73-832 | LG 855 |
| 731-1033 | 73-017 | LG 848 |
| 731-1313 | 73-834 | LG 856 |
| 731-1313A | 73-834 | LG 856 |
| 731-1313B | 73-834 | LG 856 |
| 731-1313C | 73-834 | LG 856 |
| 731-2643 | 73-039 | LG 846 |
| 731-3005 | 72-319 | LG 1042 |
| 732-0307 | 84-010 | LG 913 |
| 732-0307A | 84-010 | LG 913 |
| 732-04280B | 05-023 | LG 914 |
| 732-0429A | 05-070 | LG 914 |
| 732-0594A | 05-001 | LG 913 |
| 734-0211 | 71-400 | LG 956 |
| 734-0330 | 71-105 | LG 957 |
| 734-04039 | 72-015 | LG 1039 |
| 734-04039A | 72-015 | LG 1039 |
| 734-04082 | 72-072 | LG 1035 |
| 734-04155 | 72-025 | LG 1039 |
| 734-04223 | 72-078 | |
| 734-04223A | 72-078 | |
| 734-04223A | 72-112 | LG 1034 |
| 734-0456 | 71-103 | LG 956 |
| 734-0480 | 72-430 | LG 1034 |
| 734-0973 | 72-318 | LG 1042 |
| 734-1608 | 72-054 | LG 1034 |
| 734-1656 | 72-054 | LG 1034 |
| 734-1781 | 72-054 | LG 1034 |
| 734-1782 | 72-054 | LG 1034 |
| 734-1855 | 72-054 | LG 1034 |
| 734-1976 | 72-024 | LG 1035 |
| 734-2042 | 72-073 | LG 1035 |
| 734-3058 | 72-308-1 | LG 1042 |
| 734-30586 | 72-308-1 | LG 1042 |
| 734-3058B | 72-308-1 | LG 1042 |
| 734-973 | 72-318 | LG 1042 |
| 735-0149 | 07-392 | LG 767 |
| 735-0243 | 76-075 | LG 727 |
| 735-0243B | 76-075 | LG 727 |
| 736-0524B | 65-009 | LG 341 |
| 738-04124 | 80-749 | LG 853 |
| 738-04124A | 80-749 | LG 853 |
| 738-04155 | 80-019 | LG 852 |
| 738-0707 | 85-010 | |
| 738-0707A | 85-010 | |
| 738-0919 | 76-044 | LG 940 |
| 738-0919A | 76-044 | LG 940 |
| 741-0124 | 45-257 | LG 245 |
| 741-0124A | 45-257 | LG 245 |
| 741-0136 | 45-037 | LG 242 |
| 741-0141 | 45-000 | LG 237 |
| 741-0155 | 45-242 | LG 243 |
| 741-0170 | 45-278 | LG 240 |
| 741-0185 | 45-048 | LG 854 |
| 741-0192 | 45-278 | LG 240 |
| 741-0199 | 45-082 | LG 854 |
| 741-0225 | 45-100 | LG 239 |
| 741-0225P | 45-100 | LG 239 |
| 741-0244 | 45-278 | LG 240 |
| 741-0262 | 45-112 | LG 241 |
| 741-0293 | 45-092 | LG 854 |
| 741-0310 | 45-050 | LG 224 |
| 741-0312 | 45-070 | LG 242 |
| 741-0313 | 45-095 | LG 855 |
| 741-0404 | 45-037 | LG 242 |
| 741-04136 | 45-834 | LG 242 |
| 741-04136A | 45-834 | LG 242 |
| 741-04136B | 45-834 | LG 242 |
| 741-0471 | 45-833 | LG 855 |
| 741-0475 | 45-833 | LG 855 |
| 741-0484 | 45-112 | LG 241 |
| 741-0487 | 45-095 | LG 855 |
| 741-0487A | 45-095 | LG 855 |
| 741-0487AP | 45-095 | LG 855 |
| 7410487C | 45-095 | LG 855 |
| 741-0487C | 45-095 | LG 855 |
| 741-0490 | 45-082 | LG 854 |
| 741-0494 | 45-276 | LG 231 |
| 741-0523 | 45-045 | LG 249 |
| 741-0524P | 45-257 | LG 245 |
| 741-0563 | 45-130 | LG 232 |
| 741-0563 | 45-273 | |
| 741-0569 | 45-047 | LG 241 |
| 741-0656 | 45-071 | LG 242 |
| 741-0656A | 45-071 | LG 242 |
| 741-0659 | 45-046 | LG 241 |
| 741-0660 | 45-072 | LG 242 |
| 741-0660A | 45-072 | LG 242 |
| 741-0661 | 45-280 | LG 231 |
| 741-0661A | 45-280 | LG 231 |
| 741-0661B | 45-280 | LG 231 |
| 741-0662 | 45-281 | LG 240 |
| 741-0663 | 45-279 | LG 855 |
| 741-0706 | 45-075 | LG 241 |
| 741-0919 | 45-259 | LG 224 |
| 741-0977 | 45-257 | LG 245 |

X

* OREGON® Gator™ replacement blade

# 2019 OEM X-Reference

| OEM No. | OREGON | Page |
|---|---|---|
| **MTD** | | |
| 741-0990 | 45-074 | LG 242 |
| 741-0990A | 45-074 | LG 242 |
| 741-0990B | 45-074 | LG 242 |
| 741-099B | 45-074 | LG 242 |
| 742-0122 | 98-019 | LG 516 |
| 742-0122A | 98-019 | LG 516 |
| 742-0171 | 98-037 | LG 574 |
| 742-0171B | 98-037 | LG 574 |
| 742-025052 | 195-005 | LG 373 |
| 742-025052 | 195-019 | LG 466 |
| 742-025052 | 195-032 | LG 425 |
| 742-025052 | 195-039 | LG 430 |
| 742-025052 | 195-048 | LG 430 |
| 742-025052 | 596-900* | LG 380 |
| 742-025052 | 96-900* | LG 526 |
| 742-03002-0637 | 91-414 | LG 405 |
| 742-0306 | 98-002 | LG 401 |
| 742-0306 | 98-102* | LG 410 |
| 742-0306A | 98-002 | LG 401 |
| 742-0306A | 98-102* | LG 410 |
| 742-0322 | 91-057 | LG 409 |
| 742-0322 | 96-697* | LG 517 |
| 742-0323 | 98-044 | LG 409 |
| 742-04015 | 98-082 | LG 513 |
| 742-04043 | 598-640* | LG 405 |
| 742-04043 | 98-640* | LG 574 |
| 742-04049 | 98-637* | LG 512 |
| 742-04053 | 198-086 | LG 565 |
| 742-04053 | 591-938* | LG 407 |
| 742-04053 | 91-938* | LG 514 |
| 742-04053A | 198-086 | LG 565 |
| 742-04053A | 591-938* | LG 407 |
| 742-04053A | 91-938* | LG 514 |
| 742-04053B | 198-086 | LG 565 |
| 742-04053B | 591-938* | LG 407 |
| 742-04053B | 91-938* | LG 514 |
| 742-04053C | 198-086 | LG 565 |
| 742-04053C | 591-938* | LG 407 |
| 742-04053C | 91-938* | LG 514 |
| 742-04056 | 591-938* | LG 407 |
| 742-04056 | 91-938* | LG 514 |
| 742-04056 | 98-097 | LG 514 |
| 742-04056-0637 | 591-938* | LG 407 |
| 742-04056-0637 | 91-938* | LG 514 |
| 742-04056-0637 | 98-097 | LG 514 |
| 742-04056A | 591-938* | LG 407 |
| 742-04056A | 91-938* | LG 514 |
| 742-04056A | 98-097 | LG 514 |
| 742-04056B | 591-938* | LG 407 |
| 742-04056B | 91-938* | LG 514 |
| 742-04056B | 98-097 | LG 514 |
| 742-04056B-0637 | 591-938* | LG 407 |
| 742-04056B-0637 | 91-938* | LG 514 |
| 742-04056B-0637 | 98-097 | LG 514 |
| 742-04056C | 591-938* | LG 407 |
| 742-04056C | 91-938* | LG 514 |
| 742-04056C | 98-097 | LG 514 |
| 742-04056C-0637 | 98-097 | LG 514 |
| 742-04068 | 596-387* | LG 407 |
| 742-04068 | 96-387* | LG 515 |
| 742-04068 | 98-087 | LG 407 |
| 742-04068C | 596-387* | LG 407 |
| 742-04068C | 96-387* | LG 515 |
| 742-04068C | 98-087 | LG 407 |
| 742-04087 | 198-153 | LG 520 |
| 742-04087 | 598-629* | LG 575 |
| 742-04087 | 98-629* | LG 412 |
| 742-04101 | 591-635* | LG 411 |
| 742-04101 | 91-058 | LG 411 |
| 742-04101 | 91-635* | LG 411 |
| 742-04124-X | 98-637* | LG 512 |
| 742-04125-X | 598-640* | LG 405 |
| 742-04125-X | 98-640* | LG 574 |
| 742-04126 | 98-090 | LG 519 |
| 742-04135-4045 | 94-322 | LG 520 |
| 742-04135-4045 | 96-607* | LG 571 |
| 742-04154 | 98-094 | LG 514 |
| 742-04154 | 98-671* | LG 514 |
| 742-04154A | 98-094 | LG 514 |
| 742-04154A | 98-671* | LG 514 |
| 742-04244 | 96-401* | LG 404 |
| 742-04244 | 98-096 | LG 404 |
| 742-04244A | 96-401* | LG 404 |
| 742-04244A | 98-096 | LG 404 |
| 742-04276 | 198-049 | LG 518 |
| 742-04276 | 598-631* | LG 390 |
| 742-04276 | 98-631* | LG 390 |
| 742-04276S | 198-049 | LG 518 |
| 742-04276S | 598-631* | LG 390 |
| 742-04276S | 98-631* | LG 390 |
| 742-04290 | 96-401* | LG 404 |
| 742-04290 | 98-096 | LG 404 |
| 742-04290-X | 96-401* | LG 404 |
| 742-04308 | 598-629* | LG 575 |
| 742-04308 | 98-093 | LG 411 |
| 742-04308 | 98-629* | LG 412 |
| 742-04312 | 598-629* | LG 575 |
| 742-04312 | 98-067 | LG 520 |
| 742-04312 | 98-629* | LG 412 |
| 742-04361 | 96-401* | LG 404 |
| 742-04374 | 96-350* | LG 412 |
| 742-04380 | 598-631* | LG 390 |
| 742-04380 | 98-631* | LG 390 |
| 742-04380-0684 | 598-631* | LG 390 |
| 742-04380-0684 | 98-631* | LG 390 |
| 742-04410 | 598-629* | LG 575 |
| 742-04410 | 98-629* | LG 412 |
| 742-04415 | 596-300* | LG 519 |
| 742-04415 | 96-300* | LG 519 |
| 742-04415 | 98-071 | LG 411 |
| 742-04415-X | 596-300* | LG 519 |
| 742-04415-X | 96-300* | LG 519 |
| 742-04415-XG | 596-300* | LG 519 |
| 742-04415-XG | 96-300* | LG 519 |
| 742-04416-X | 596-351* | LG 408 |
| 742-04416-X | 96-351* | LG 408 |
| 742-04418 | 396-815* | LG 521 |
| 742-04418-0637 | 396-815* | LG 521 |
| 742-0473 | 98-044 | LG 409 |
| 742-0473A | 98-044 | LG 409 |
| 742-0486 | 98-486 | LG 512 |
| 742-0486A | 98-486 | LG 512 |
| 742-0487 | 98-487 | LG 513 |
| 742-0487A | 98-487 | LG 513 |
| 742-0490 | 98-002 | LG 401 |
| 742-0490 | 98-102* | LG 410 |
| 742-0493 | 98-493 | LG 409 |
| 742-0496 | 98-496 | LG 515 |
| 742-0496A | 98-496 | LG 515 |
| 742-0499 | 598-600* | LG 519 |
| 742-0499 | 98-499 | LG 519 |
| 742-0499 | 98-600* | LG 85 |
| 742-0499A | 598-600* | LG 519 |
| 742-0499A | 98-499 | LG 519 |
| 742-0499A | 98-600* | LG 85 |
| 742-0503 | 598-600* | LG 519 |
| 742-0503 | 98-600* | LG 85 |
| 742-0504 | 98-044 | LG 409 |
| 742-0504A | 98-044 | LG 409 |
| 742-0508 | 598-600* | LG 519 |
| 742-0508 | 98-499 | LG 519 |
| 742-0508 | 98-600* | LG 85 |
| 742-0508A | 598-600* | LG 519 |
| 742-0508A | 98-499 | LG 519 |
| 742-0508A | 98-600* | LG 85 |
| 742-0521 | 98-002 | LG 401 |
| 742-0521 | 98-102* | LG 410 |
| 742-0522 | 98-005 | LG 521 |
| 742-0537 | 98-537 | LG 516 |
| 742-0538 | 598-600* | LG 519 |
| 742-0538 | 98-600* | LG 85 |
| 742-0542 | 98-057 | LG 513 |
| 742-0543 | 98-056 | LG 512 |
| 742-0563 | 98-007 | LG 401 |
| 742-0563 | 98-102* | LG 410 |
| 742-0572 | 98-005 | LG 521 |
| 742-0610 | 198-058 | LG 517 |
| 742-0610 | 598-628* | LG 517 |
| 742-0610 | 98-628* | LG 389 |
| 742-0610A | 198-058 | LG 517 |
| 742-0610A | 598-628* | LG 517 |
| 742-0610A | 98-628* | LG 389 |
| 742-0610A-0637 | 198-058 | LG 517 |
| 742-0610A-0637 | 598-628* | LG 517 |
| 742-0610A-0637 | 98-628* | LG 389 |
| 742-0611 | 198-063 | LG 513 |
| 742-0611 | 598-640* | LG 405 |
| 742-0611 | 98-640* | LG 574 |
| 742-0611A | 198-063 | LG 513 |
| 742-0611A | 598-640* | LG 405 |
| 742-0611A | 98-640* | LG 574 |
| 742-0611-X | 598-640* | LG 405 |
| 742-0611-X | 98-640* | LG 574 |
| 742-0612 | 98-061 | LG 404 |
| 742-0612 | 98-637* | LG 512 |
| 742-0612A | 98-061 | LG 404 |
| 742-0612A | 98-637* | LG 512 |
| 742-0612-X | 98-637* | LG 512 |
| 7420616 | 198-059 | LG 403 |
| 7420616 | 598-629* | LG 575 |
| 7420616 | 98-629* | LG 412 |
| 742-0616A | 198-059 | LG 403 |
| 742-0616A | 598-629* | LG 575 |
| 742-0616A | 98-629* | LG 412 |
| 742-0620 | 98-001 | LG 517 |
| 742-0621 | 98-002 | LG 401 |
| 742-0621 | 98-102* | LG 410 |
| 742-0622 | 98-005 | LG 521 |
| 742-0623 | 598-064* | LG 514 |
| 742-0623 | 98-064-1 | LG 514 |
| 742-0640 | 98-068 | LG 389 |
| 742-0642 | 98-050 | LG 521 |
| 742-0642A | 98-050 | LG 521 |
| 742-0644 | 98-054 | LG 574 |
| 742-0644 | 98-634* | LG 405 |
| 742-0645 | 98-069 | LG 404 |
| 742-0645 | 98-670* | LG 512 |
| 742-0654 | 198-052 | LG 389 |
| 742-0654 | 598-628* | LG 517 |
| 742-0654 | 98-628* | LG 389 |
| 742-0656 | 598-629* | LG 575 |
| 742-0656 | 98-093 | LG 411 |
| 742-0656 | 98-629* | LG 412 |
| 742-0677 | 398-672* | LG 515 |
| 742-0677 | 598-672* | LG 515 |
| 742-0677 | 98-072 | LG 408 |
| 742-0677 | 98-672* | LG 408 |
| 742-0677A | 398-672* | LG 515 |
| 742-0677A | 598-672* | LG 515 |
| 742-0677A | 98-072 | LG 408 |
| 742-0677A | 98-672* | LG 408 |
| 742-0677B | 398-672* | LG 515 |
| 742-0677B | 598-672* | LG 515 |
| 742-0677B | 98-072 | LG 408 |
| 742-0677B | 98-672* | LG 408 |
| 742-0720 | 98-001 | LG 517 |
| 742-0721 | 98-007 | LG 401 |
| 742-0721 | 98-102* | LG 410 |
| 742-0722 | 98-005 | LG 521 |
| 742-0738 | 98-065 | LG 515 |
| 742-0739 | 92-140 | LG 516 |
| 742-0740 | 98-066 | LG 409 |
| 742-0741 | 198-049 | LG 518 |
| 742-0741 | 598-631* | LG 390 |
| 742-0741 | 98-631* | LG 390 |
| 742-0741A | 198-049 | LG 518 |
| 742-0741A | 598-631* | LG 390 |
| 742-0741A | 98-631* | LG 390 |
| 742-0741A-X | 598-631* | LG 390 |
| 742-0741A-X | 98-631* | LG 390 |
| 742-0741-S | 598-631* | LG 390 |
| 742-0741-S | 98-631* | LG 390 |
| 742-0742 | 98-051 | LG 521 |
| 742-0742A | 98-051 | LG 521 |
| 742-0742A-0637 | 98-051 | LG 521 |
| 742-3002 | 91-414 | LG 405 |
| 742-3011 | 91-330 | LG 513 |
| 742-3011-0637 | 91-330 | LG 513 |
| 742-3018 | 91-332 | LG 412 |
| 742-3018 | 96-350* | LG 412 |
| 742-3036 | 596-373* | LG 512 |
| 742-3036 | 91-073 | LG 512 |
| 742-4360 | 598-629* | LG 575 |
| 742-4360 | 98-629* | LG 412 |
| 742-493 | 98-493 | LG 409 |
| 743-0112 | 19-005 | LG 983 |
| 7458 | 98-019 | LG 516 |
| 746-0376A | 65-225 | LG 341 |
| 746-04007 | 46-337 | LG 713 |
| 746-04120 | 60-059 | LG 706 |
| 746-04143 | 60-062 | LG 706 |
| 746-04173 | 60-527 | LG 714 |
| 746-04173A | 60-527 | LG 714 |
| 746-04173B | 60-527 | LG 714 |
| 746-04173C | 60-527 | LG 714 |
| 746-0417A | 60-527 | LG 714 |
| 746-04206 | 60-528 | LG 708 |
| 746-04206A | 60-528 | LG 708 |
| 746-04229 | 46-032 | LG 705 |
| 746-04229B | 46-032 | LG 705 |
| 746-04230 | 46-033 | LG 714 |
| 746-04230A | 46-033 | LG 714 |
| 746-04236 | 46-034 | LG 714 |
| 746-04237 | 46-035 | LG 714 |
| 746-04256 | 46-036 | LG 714 |
| 746-04352 | 60-137 | LG 705 |
| 746-04352A | 60-137 | LG 705 |
| 746-04477 | 46-038 | LG 715 |
| 746-04528A | 46-039 | LG 705 |
| 746-04528B | 46-039 | LG 705 |
| 746-04556 | 60-140 | LG 715 |
| 746-04618 | 46-041 | LG 706 |
| 746-04618A | 46-041 | LG 706 |
| 746-04640 | 46-042 | LG 715 |
| 746-04642 | 46-043 | LG 715 |
| 746-04642A | 46-043 | LG 715 |
| 746-0472 | 60-012-0 | LG 712 |
| 746-0474 | 46-319 | LG 712 |
| 746-0477A | 46-317 | LG 707 |
| 746-0506 | 46-002 | LG 856 |
| 746-0550 | 46-320 | LG 707 |
| 746-0552 | 46-310 | LG 713 |
| 746-0553 | 46-321 | LG 707 |
| 746-0554 | 46-316 | LG 707 |
| 746-0573 | 46-002 | LG 856 |
| 746-0613 | 60-002 | LG 710 |
| 746-0613A | 60-002 | LG 710 |
| 746-0614 | 60-124 | LG 710 |
| 746-0614A | 60-124 | LG 710 |
| 746-0616 | 60-003 | LG 710 |
| 746-0616A | 60-003 | LG 710 |
| 746-0630 | 60-021 | LG 706 |
| 746-0630A | 60-021 | LG 706 |
| 746-0632 | 46-319 | LG 712 |
| 746-0633 | 60-012-0 | LG 712 |
| 746-0634 | 60-014 | LG 712 |
| 746-0634A | 60-014 | LG 712 |
| 746-0671 | 46-319 | LG 712 |
| 746-0671A | 46-319 | LG 712 |

X



* OREGON® Gator™ replacement blade

## MTD

| OEM No. | OREGON | Page |
|---|---|---|
| 746-0671A | 60-012-0 | LG 712 |
| 746-0672 | 60-012-0 | LG 712 |
| 746-0713 | 46-004 | LG 707 |
| 746-0713A | 46-004 | LG 707 |
| 746-0841 | 60-012-0 | LG 712 |
| 746-0842 | 46-319 | LG 712 |
| 746-0842 | 46-323 | LG 712 |
| 746-0843 | 46-319 | LG 712 |
| 746-0875 | 60-005 | LG 704 |
| 746-0876 | 60-007 | LG 704 |
| 746-0896 | 46-339 | LG 710 |
| 746-0897 | 46-044 | LG 710 |
| 746-0897A | 46-044 | LG 710 |
| 746-0898 | 46-006 | LG 712 |
| 746-0898A | 46-006 | LG 712 |
| 746-0898B | 46-006 | LG 712 |
| 746-0901 | 46-338 | LG 704 |
| 746-0902 | 46-046 | LG 704 |
| 746-0903 | 46-047 | LG 704 |
| 746-0910A | 46-005 | LG 707 |
| 746-0912 | 60-045 | LG 707 |
| 746-0949 | 46-048 | LG 711 |
| 746-0949A | 46-048 | LG 711 |
| 746-0951 | 46-341 | LG 711 |
| 746-0951A | 46-341 | LG 711 |
| 746-0952 | 46-340 | LG 711 |
| 746-0956 | 46-049 | LG 705 |
| 746-0956A | 46-049 | LG 705 |
| 746-0956B | 46-049 | LG 705 |
| 746-0970 | 46-050 | LG 711 |
| 746-1085 | 60-039 | LG 706 |
| 746-1085A | 60-039 | LG 706 |
| 746-1088 | 60-041 | LG 711 |
| 746-1100 | 60-042 | LG 712 |
| 746-1130 | 46-051 | LG 712 |
| 748-0108 | 45-277 | LG 242 |
| 748-0143 | 45-092 | LG 854 |
| 748-0151 | 45-082 | LG 854 |
| 748-0169 | 45-094 | LG 249 |
| 748-0227 | 45-088 | LG 240 |
| 748-0227A | 45-088 | LG 240 |
| 748-0229 | 45-088 | LG 240 |
| 748-0235 | 65-220 | LG 340 |
| 748-0269 | 45-277 | LG 242 |
| 748-0283 | 65-220 | LG 340 |
| 748-0300 | 65-221 | LG 341 |
| 748-0300B | 65-221 | LG 341 |
| 748-0323 | 65-224 | LG 341 |
| 748-0323 | 80-146 | LG 341 |
| 748-0324 | 65-226 | LG 341 |
| 748-0365 | 65-228 | LG 341 |
| 748-0376B | 65-225 | LG 341 |
| 748-0376C | 65-225 | LG 341 |
| 748-0376E | 65-225 | LG 341 |
| 748-0855 | 45-091 | LG 249 |
| 750-0204 | 45-082 | LG 854 |
| 751-0101A | 75-148 | LG 300 |
| 751-0171 | 07-404 | LG 766 |
| 751-0603 | 07-309 | LG 772 |
| 751-10630 | 33-256 | LG 946 |
| 751-10639 | 49-326 | LG 768 |
| 751-10639A | 49-326 | LG 768 |
| 751-10645 | 33-746 | LG 920 |
| 751-10645A | 33-746 | LG 920 |
| 751-10658 | 31-119 | LG 924 |
| 751-10955 | 31-120 | LG 924 |
| 751-11021 | 49-328 | LG 606 |
| 751-11021A | 49-328 | LG 606 |
| 751-11196 | 33-745 | LG 920 |
| 751-11219 | 49-331 | LG 604 |
| 751-11219A | 49-331 | LG 604 |
| 751-11310 | 31-121 | LG 924 |
| 751-11332 | 49-329 | LG 604 |
| 751-11332A | 49-329 | LG 604 |
| 751-11355 | 49-327 | LG 606 |
| 751-11355A | 49-327 | LG 606 |
| 751-12760A | 49-329 | LG 604 |
| 751-12762A | 49-331 | LG 604 |
| 751-12788A | 49-328 | LG 606 |
| 751-14321 | 49-327 | LG 606 |
| 751-3054 | 07-390 | LG 766 |
| 751-3111 | 07-309 | LG 772 |
| 753-0210 | 65-220 | LG 340 |
| 753-0343B | 65-222 | LG 341 |
| 753-0348B | 65-222 | LG 341 |
| 753-04232 | 43-021 | LG 934 |
| 753-04517 | 76-044 | LG 940 |
| 753-0462 | 65-224 | LG 341 |
| 753-0463 | 65-226 | LG 341 |
| 753-0484 | 80-146 | LG 341 |
| 753-0485 | 65-226 | LG 341 |
| 753-04856A | 72-015 | LG 1039 |
| 753-04856A | 72-308-1 | LG 1042 |
| 753-05319 | 82-500 | LG 893 |
| 753-05549 | 04-015 | LG 899 |
| 753-05550 | 45-257 | LG 245 |
| 753-0583 | 65-221 | LG 341 |
| 753-0583 | 80-145 | LG 341 |
| 753-0613 | 73-016 | LG 846 |
| 753-0626 | 73-058 | LG 848 |
| 753-0635 | 44-366 | LG 837 |
| 753-0642-0637 | 76-018 | LG 938 |
| 753-08171 | 78-065 | LG 832 |
| 754-0101 | 75-148 | LG 300 |
| 754-0101A | 75-148 | LG 300 |
| 754-0101B | 75-148 | LG 300 |
| 754-0125 | 15-589 | LG 273 |
| 754-0125A | 15-589 | LG 273 |
| 754-0131 | 75-365 | LG 862 |
| 754-0142 | 15-590 | LG 300 |
| 754-0145 | 75-145 | LG 300 |
| 754-0145A | 75-145 | LG 300 |
| 754-0151 | 75-004 | LG 301 |
| 754-0178 | 75-179 | LG 310 |
| 754-0181 | 15-593 | LG 301 |
| 7540182 | 75-208 | LG 277 |
| 754-0194 | 75-090 | LG 301 |
| 754-0197 | 75-079 | LG 301 |
| 754-0201 | 75-441 | LG 334 |
| 754-0230 | 75-008 | LG 301 |
| 754-0234 | 75-441 | LG 334 |
| 754-0240 | 75-009 | LG 301 |
| 754-0241 | 175-012 | LG 301 |
| 754-0241 | 75-012 | LG 301 |
| 754-0241A | 75-012 | LG 301 |
| 754-0254 | 75-120 | LG 300 |
| 754-0266 | 75-016 | LG 301 |
| 754-0266A | 75-016 | LG 301 |
| 754-0280 | 175-002 | LG 301 |
| 754-0280 | 75-002 | LG 301 |
| 754-0280A | 75-002 | LG 301 |
| 754-0281 | 75-281 | LG 301 |
| 754-0293 | 75-018 | LG 301 |
| 754-0329 | 75-029 | LG 253 |
| 754-0329A | 175-029 | LG 303 |
| 754-0329A | 75-029 | LG 253 |
| 754-0339 | 75-021 | LG 274 |
| 754-0342 | 75-023 | LG 302 |
| 754-0343 | 75-020 | LG 302 |
| 754-0346 | 75-091 | LG 302 |
| 754-0349 | 75-021 | LG 274 |
| 754-0350 | 75-035 | LG 302 |
| 754-0355 | 75-023 | LG 302 |
| 754-0358 | 75-024 | LG 302 |
| 754-0362 | 75-118 | LG 302 |
| 754-0364 | 175-025 | LG 302 |
| 754-0364 | 75-025 | LG 253 |
| 754-0367 | 75-157 | LG 251 |
| 754-0369 | 75-027 | LG 302 |
| 754-0370 | 175-119 | LG 302 |
| 754-0370 | 75-119 | LG 302 |
| 754-0371 | 175-028 | LG 302 |
| 754-0371 | 75-028 | LG 302 |
| 754-0371A | 75-028 | LG 302 |
| 754-04001 | 75-673 | LG 305 |
| 754-04001A | 75-673 | LG 305 |
| 754-04002 | 75-709 | LG 305 |
| 754-04014 | 15-604 | LG 275 |
| 754-04032 | 75-249 | LG 305 |
| 754-04032A | 75-249 | LG 305 |
| 754-04032B | 75-249 | LG 305 |
| 754-04033 | 75-706 | LG 256 |
| 754-04041 | 15-013 | LG 256 |
| 754-04043 | 75-886 | LG 276 |
| 754-04045 | 75-714 | LG 276 |
| 754-04048 | 75-716 | LG 276 |
| 754-04050 | 115-219 | LG 305 |
| 754-04055 | 15-606 | LG 275 |
| 754-04060 | 75-813 | LG 276 |
| 754-04060B | 75-813 | LG 276 |
| 754-04062 | 75-600 | LG 276 |
| 754-04077 | 75-814 | LG 276 |
| 754-04093 | 15-053 | LG 305 |
| 754-04118 | 75-815 | LG 277 |
| 754-04122 | 15-025 | LG 255 |
| 754-04142 | 15-026 | LG 277 |
| 754-04201 | 15-052 | LG 315 |
| 754-04207 | 15-613 | LG 305 |
| 754-04219 | 15-027 | LG 306 |
| 754-04240 | 15-028 | LG 277 |
| 754-04252 | 15-132 | LG 306 |
| 754-04259 | 15-133 | LG 306 |
| 754-04259A | 15-133 | LG 306 |
| 754-0427 | 75-168 | LG 310 |
| 754-0430 | 75-158 | LG 251 |
| 754-0430A | 75-158 | LG 251 |
| 754-0430B | 75-158 | LG 251 |
| 754-0431 | 75-158 | LG 251 |
| 754-0433 | 75-029 | LG 253 |
| 754-0434 | 75-999 | LG 253 |
| 754-0438 | 15-616 | LG 303 |
| 754-0439 | 75-159 | LG 303 |
| 754-0440 | 75-161 | LG 255 |
| 754-0441 | 75-160 | LG 303 |
| 754-0443 | 75-109 | LG 303 |
| 754-0443A | 75-109 | LG 303 |
| 754-0446 | 75-674 | LG 303 |
| 754-0453 | 75-675 | LG 303 |
| 754-0461 | 75-824 | LG 274 |
| 754-0465 | 75-249 | LG 305 |
| 754-0467 | 175-995 | LG 303 |
| 754-0467 | 75-995 | LG 303 |
| 754-0467A | 75-995 | LG 303 |
| 754-0468 | 175-993 | LG 303 |
| 754-0468 | 75-993 | LG 303 |
| 754-0472 | 75-361 | LG 254 |
| 754-0474 | 75-362 | LG 256 |
| 754-0475 | 75-363 | LG 304 |
| 754-0476 | 75-364 | LG 304 |
| 754-0483 | 15-619 | LG 274 |
| 754-0485 | 75-263 | LG 304 |
| 754-0486 | 75-264 | LG 304 |
| 754-0486A | 75-264 | LG 304 |
| 754-0497 | 75-676 | LG 304 |
| 754-0498 | 75-677 | LG 304 |
| 754-0640 | 75-823 | LG 254 |
| 754-0641 | 15-623 | LG 274 |
| 754-0642 | 175-994 | LG 304 |
| 754-0642 | 75-994 | LG 304 |
| 754-066A | 75-016 | LG 301 |
| 754-0935 | 75-092 | LG 304 |
| 754-3001 | 15-588 | LG 275 |
| 754-3004 | 15-625 | LG 275 |
| 754-3045 | 15-627 | LG 275 |
| 754-3048 | 15-628 | LG 275 |
| 754-3053 | 15-629 | LG 304 |
| 756-0116 | 34-030 | LG 821 |
| 756-0116 | 78-019 | LG 831 |
| 756-0116A | 78-019 | LG 831 |
| 756-0117 | 34-006 | LG 821 |
| 756-0124 | 44-101 | LG 837 |
| 756-0137 | 34-005 | LG 821 |
| 756-0166 | 34-031 | LG 821 |
| 756-0178 | 34-028 | LG 821 |
| 756-0183 | 34-018 | LG 821 |
| 756-0199 | 34-002 | LG 821 |
| 756-0217 | 34-010 | LG 831 |
| 756-0218 | 34-029 | LG 821 |
| 756-0225 | 34-008 | LG 821 |
| 756-0226 | 34-038 | LG 821 |
| 756-0240 | 34-012 | LG 821 |
| 756-0251 | 44-101 | LG 837 |
| 756-0313 | 34-001 | LG 821 |
| 756-0365 | 78-050 | LG 831 |
| 756-0399 | 34-036 | LG 821 |
| 756-04010 | 44-365 | LG 837 |
| 756-04129 | 78-065 | LG 832 |
| 756-04129B | 78-065 | LG 832 |
| 756-04129C | 78-065 | LG 832 |
| 756-04209 | 34-030 | LG 821 |
| 756-04209 | 78-019 | LG 831 |
| 756-04216 | 34-065 | LG 837 |
| 756-04224 | 78-028 | LG 831 |
| 756-0437 | 34-013 | LG 824 |
| 756-0437 | 34-014 | LG 831 |
| 756-0486 | 44-100 | LG 837 |
| 756-0488 | 44-366 | LG 837 |
| 756-0492 | 34-035 | LG 821 |
| 756-0499 | 34-036 | LG 821 |
| 756-0515 | 34-015 | LG 821 |
| 756-0515 | 78-114 | LG 829 |
| 756-0556 | 44-368 | LG 837 |
| 756-0603 | 44-101 | LG 837 |
| 756-0627 | 34-041 | LG 831 |
| 756-0627B | 34-041 | LG 831 |
| 756-0627D | 34-041 | LG 831 |
| 756-0643 | 34-014 | LG 831 |
| 756-0643A | 34-014 | LG 831 |
| 756-0969 | 44-102 | LG 85 |
| 756-0977 | 44-101 | LG 837 |
| 756-0980 | 44-369 | LG 837 |
| 756-0981 | 78-028 | LG 831 |
| 756-0981A | 78-028 | LG 831 |
| 756-0981B | 78-028 | LG 831 |
| 756-0982 | 44-365 | LG 837 |
| 756-0982A | 44-365 | LG 837 |
| 756-0982B | 44-365 | LG 837 |
| 756-0983 | 44-367 | LG 838 |
| 756-0983A | 44-365 | LG 837 |
| 756-0983A | 44-367 | LG 838 |
| 756-0983B | 44-367 | LG 838 |
| 756-1035A | 34-031 | LG 821 |
| 756-1202 | 44-103 | LG 838 |
| 756-1208 | 78-029 | LG 831 |
| 756-1227 | 78-066 | LG 838 |
| 756-1229 | 78-046 | LG 826 |
| 756-1229 | 78-098 | LG 832 |
| 756-3105 | 78-047 | LG 832 |
| 759-04019 | 98-082 | LG 513 |
| 759-04047 | 596-387* | LG 407 |
| 759-04047 | 96-387* | LG 515 |
| 759-04047 | 98-087 | LG 407 |
| 759-04081 | 591-635* | LG 411 |
| 759-04081 | 91-058 | LG 411 |
| 759-04081 | 91-635* | LG 411 |
| 759-3411 | 91-442 | LG 518 |
| 759-3812 | 91-414 | LG 405 |
| 759-3819 | 91-330 | LG 513 |
| 759-3824 | 91-332 | LG 412 |

X

* OREGON® Gator™ replacement blade

# 2019 OEM X-Reference

## MTD

| OEM No. | OREGON | Page |
|---|---|---|
| 759-3824 | 96-350* | LG 412 |
| 759-3830 | 591-635* | LG 411 |
| 759-3830 | 91-058 | LG 411 |
| 759-3830 | 91-635* | LG 411 |
| 759-3830-X | 591-635* | LG 411 |
| 759-3830-X | 91-635* | LG 411 |
| 759-3839 | 91-442 | LG 518 |
| 759-3929 | 596-373* | LG 512 |
| 759-3929 | 91-073 | LG 512 |
| 759-3939 | 596-373* | LG 512 |
| 759-3939 | 91-073 | LG 512 |
| 761-0168 | 82-100 | LG 802 |
| 764-0221 | 86-025 | LG 781 |
| 764-0221P | 86-025 | LG 781 |
| 7714 | 98-019 | LG 516 |
| 781-0080 | 40-316 | LG 586 |
| 781-0080-0637 | 40-316 | LG 586 |
| 781-0748 | 40-009 | LG 588 |
| 781-0748-0637 | 40-009 | LG 588 |
| 781-682039 | 07-017 | LG 1022 |
| 784-5030 | 73-020 | LG 850 |
| 784-5038 | 73-020 | LG 850 |
| 784-5038A | 73-020 | LG 850 |
| 784-5038B | 73-020 | LG 850 |
| 784-5038B-0637 | 73-020 | LG 850 |
| 784-5038B-0689 | 73-020 | LG 850 |
| 784-5039 | 73-020 | LG 850 |
| 784-5485 | 73-050 | LG 846 |
| 784-5485-0498 | 73-050 | LG 846 |
| 784-5576 | 73-054 | LG 848 |
| 784-5576-0637 | 73-054 | LG 848 |
| 784-5579 | 73-055 | LG 848 |
| 784-5579 | 73-058 | LG 848 |
| 784-5579-0638 | 73-058 | LG 848 |
| 784-5579-0692 | 73-058 | LG 848 |
| 784-5579A | 73-055 | LG 848 |
| 784-5579A | 73-058 | LG 848 |
| 784-5579A-0629 | 73-058 | LG 848 |
| 784-5579A-0662 | 73-058 | LG 848 |
| 784-5579A-0665 | 73-058 | LG 848 |
| 784-5579A-0667 | 73-058 | LG 848 |
| 784-5579A-0689 | 73-058 | LG 848 |
| 784-5579A-0691 | 73-058 | LG 848 |
| 784-5580 | 73-031 | LG 850 |
| 784-5580-0483 | 73-031 | LG 850 |
| 784-5580-0637 | 73-031 | LG 850 |
| 784-5580-0637 | 73-826 | |
| 784-5580-0638 | 73-031 | LG 850 |
| 784-5580-0662 | 73-031 | LG 850 |
| 784-5580-0665 | 73-031 | LG 850 |
| 784-5580-0689 | 73-031 | LG 850 |
| 784-5580-0691 | 73-031 | LG 850 |
| 784-5580-0721 | 73-031 | LG 850 |
| 784-5580-0729 | 73-031 | LG 850 |
| 784-5580-4043 | 73-031 | LG 850 |
| 784-5580-4044 | 73-031 | LG 850 |
| 784-5581A | 73-057 | LG 848 |
| 784-5581A-0483 | 73-057 | LG 848 |
| 784-5581A-0637 | 73-057 | LG 848 |
| 784-5581A-0662 | 73-057 | LG 848 |
| 784-5581A-0687 | 73-057 | LG 848 |
| 784-5582 | 73-055 | LG 848 |
| 784-5582A | 73-055 | LG 848 |
| 787-01503 | 40-316 | LG 586 |
| 790-00117-0637 | 73-054 | LG 848 |
| 790-00118-0637 | 73-055 | LG 848 |
| 790-00119-0637 | 73-056 | LG 848 |
| 790-00120-0637 | 73-057 | LG 848 |
| 790-00121 | 73-058 | LG 848 |
| 790-00121-0606 | 73-058 | LG 848 |
| 790-00121-0637 | 73-058 | LG 848 |
| 790-00121-0638 | 73-058 | LG 848 |
| 790-00121-0691 | 73-058 | LG 848 |
| 790-00121-0709 | 73-058 | LG 848 |
| 790-00121-0721 | 73-058 | LG 848 |
| 790-00121-4041 | 73-058 | LG 848 |
| 790-00121-4044 | 73-058 | LG 848 |
| 791-153066B | 55-803 | LG 1022 |
| 791-180814B | 55-812 | LG 1022 |
| 791-181468B | 55-182 | LG 1023 |
| 791-181597 | 43-021 | LG 934 |
| 791-613223 | 40-141 | LG 585 |
| 791-613223B | 40-141 | LG 585 |
| 791-683974B | 49-088-0 | LG 631 |
| 811-0185 | 60-016 | LG 710 |
| 831-0798 | 60-008 | LG 703 |
| 831-0823 | 60-008 | LG 703 |
| 831-0823A | 60-008 | LG 703 |
| 831-0823A | 60-015 | LG 716 |
| 910-0890 | 80-743 | LG 852 |
| 910-0890A | 80-743 | LG 852 |
| 910-0891 | 80-746 | LG 852 |
| 912-0417A | 04-015 | LG 899 |
| 913-0139 | 02-188 | LG 676 |
| 913-0154 | 02-193 | LG 676 |
| 913-0723 | 02-191 | LG 676 |
| 914-04040 | 02-901 | LG 853 |
| 914-04040A | 02-901 | LG 853 |
| 914-0868 | 02-535 | |
| 915-0595A | 82-518 | LG 897 |
| 917-04080 | 33-126-1 | LG 736 |
| 917-04174 | 33-134 | LG 736 |
| 917-04174A | 33-134 | LG 736 |
| 917-04622 | 33-255 | LG 736 |
| 917-0678 | 76-110 | LG 726 |
| 917-0900A | 82-501 | LG 894 |
| 917-0906 | 82-500 | LG 893 |
| 917-0906A | 82-500 | LG 893 |
| 917-0912 | 82-502 | LG 894 |
| 917-0913 | 82-503 | LG 895 |
| 917-0949 | 33-110 | LG 735 |
| 917-1425 | 84-014 | LG 856 |
| 917-1434 | 33-110 | LG 735 |
| 917-1459 | 33-112 | LG 735 |
| 917-1708 | 33-125-1 | LG 736 |
| 9171709 | 33-139 | LG 736 |
| 917-1709 | 33-126-1 | LG 736 |
| 917-1709 | 33-139 | LG 736 |
| 918-0116 | 82-512 | LG 895 |
| 918-0116B | 82-512 | LG 895 |
| 918-0116C | 82-512 | LG 895 |
| 918-0117 | 82-511 | LG 895 |
| 918-0117A | 82-511 | LG 895 |
| 918-0117B | 82-511 | LG 895 |
| 918-0138 | 82-513-2 | LG 896 |
| 918-0138A | 82-513-2 | LG 896 |
| 918-0138C | 82-513-2 | LG 896 |
| 918-0142 | 82-513-2 | LG 896 |
| 918-0142A | 82-513-2 | LG 896 |
| 918-0142C | 82-513-2 | LG 896 |
| 918-0240 | 82-515 | LG 896 |
| 918-0240A | 82-515 | LG 896 |
| 918-0240C | 82-515 | LG 896 |
| 918-0241 | 82-516 | LG 896 |
| 918-0241B | 82-516 | LG 896 |
| 918-0282D | 73-827 | |
| 918-0282E | 73-827 | |
| 918-0324 | 82-051 | LG 898 |
| 918-04125 | 82-403 | LG 879 |
| 918-04125A | 82-403 | LG 879 |
| 918-04126B | 82-403 | LG 879 |
| 918-04197 | 82-051 | LG 898 |
| 918-04197A | 82-051 | LG 898 |
| 918-0427 | 82-051 | LG 898 |
| 918-0427A | 82-051 | LG 898 |
| 918-0427C | 82-051 | LG 898 |
| 918-0427D | 82-051 | LG 898 |
| 918-0430 | 82-515 | LG 896 |
| 918-0430A | 82-515 | LG 896 |
| 918-0430B | 82-515 | LG 896 |
| 918-0430C | 82-515 | LG 896 |
| 918-0431 | 82-516 | LG 896 |
| 918-0431A | 82-516 | LG 896 |
| 918-0431B | 82-516 | LG 896 |
| 918-0431C | 82-516 | LG 896 |
| 918-04394 | 82-406 | LG 880 |
| 918-04461 | 82-407 | LG 880 |
| 918-04474 | 82-054 | LG 898 |
| 918-04474A | 82-054 | LG 898 |
| 918-04495 | 82-054 | LG 898 |
| 918-04495A | 82-054 | LG 898 |
| 918-04822 | 82-058 | LG 898 |
| 918-04822A | 82-058 | LG 898 |
| 918-04825 | 82-043 | LG 899 |
| 918-04889 | 82-058 | LG 898 |
| 918-04889A | 82-058 | LG 898 |
| 918-05016 | 82-043 | LG 899 |
| 918-0574 | 82-517 | LG 896 |
| 918-0574C | 82-517 | LG 896 |
| 918-0593 | 82-518 | LG 897 |
| 918-0593A | 82-518 | LG 897 |
| 918-0595 | 82-518 | LG 897 |
| 918-0595B | 82-518 | LG 897 |
| 918-0596 | 82-520 | LG 897 |
| 918-0596B | 82-520 | LG 897 |
| 918-0596C | 82-520 | LG 897 |
| 918-0659 | 82-408 | LG 878 |
| 918-0671 | 82-519 | LG 897 |
| 918-0671B | 82-519 | LG 897 |
| 918-0671D | 82-519 | LG 897 |
| 918-3129A | 82-411 | LG 878 |
| 918-3129B | 82-411 | LG 878 |
| 918-3129C | 82-411 | LG 878 |
| 918-3167 | 82-044 | LG 879 |
| 923-0156 | 45-104 | LG 939 |
| 923-0179 | 45-114 | LG 938 |
| 923-0383 | 42-557 | LG 803 |
| 923-0448A | 45-132 | LG 939 |
| 923-3018 | 45-111 | LG 939 |
| 925-0201 | 42-008 | LG 945 |
| 925-0267 | 33-386 | LG 942 |
| 925-0267A | 33-386 | LG 942 |
| 9250267B | 33-386 | LG 942 |
| 925-0267B | 33-386 | LG 942 |
| 925-0268 | 33-240 | LG 948 |
| 925-04019 | 33-106 | LG 943 |
| 925-04039 | 33-028 | LG 947 |
| 925-04175 | 33-083 | LG 947 |
| 92504228 | 33-074 | LG 944 |
| 925-04228 | 33-074 | LG 944 |
| 925-04258 | 33-083 | LG 947 |
| 925-0530 | 33-330 | LG 729 |
| 925-0530 | 33-331 | LG 730 |
| 925-0771 | 33-330 | LG 729 |
| 925-0771 | 33-331 | LG 730 |
| 925-0771 | 33-337 | LG 730 |
| 925-0803C | 33-382 | LG 947 |
| 925-1396 | 33-399 | LG 944 |
| 925-1396A | 33-399 | LG 944 |
| 925-1426 | 33-330 | LG 729 |
| 925-1426 | 33-331 | LG 730 |
| 925-1426 | 33-335 | LG 730 |
| 925-1426 | 33-337 | LG 730 |
| 925-1426A | 33-330 | LG 729 |
| 925-1426A | 33-331 | LG 730 |
| 925-1426A | 33-335 | LG 730 |
| 925-1426A | 33-337 | LG 730 |
| 925-1648 | 33-242 | LG 729 |
| 925-1657A | 33-084 | LG 948 |
| 925-1660 | 33-089 | LG 946 |
| 925-1740 | 33-376 | LG 942 |
| 925-1741 | 33-376 | LG 942 |
| 925-1745 | 33-099 | LG 946 |
| 925-3163 | 33-152 | LG 942 |
| 925-3164A | 33-026 | LG 947 |
| 925-3166 | 33-019 | LG 948 |
| 925-3169A | 33-028 | LG 947 |
| 926-0106 | 04-721 | |
| 931-0374 | 45-113 | LG 242 |
| 931-0780A | 73-016 | LG 846 |
| 931-0782A | 73-016 | LG 846 |
| 932-0429A | 05-070 | LG 914 |
| 932-0594A | 05-001 | LG 913 |
| 9322 | 44-364 | LG 728 |
| 934-04039 | 72-015 | LG 1039 |
| 934-04223 | 72-078 | |
| 935-0149 | 07-392 | LG 767 |
| 935-0243B | 76-075 | LG 727 |
| 938-04124A | 80-749 | LG 853 |
| 938-0707A | 85-010 | |
| 938-0919 | 76-044 | LG 940 |
| 941-0124 | 45-257 | LG 245 |
| 941-0124A | 45-257 | LG 245 |
| 941-0141 | 45-000 | LG 237 |
| 941-0155 | 45-242 | LG 243 |
| 941-0168B | 82-100 | LG 802 |
| 941-0168D | 82-100 | LG 802 |
| 941-0170 | 45-278 | LG 240 |
| 941-0185 | 45-048 | LG 854 |
| 941-0199 | 45-082 | LG 854 |
| 941-0225 | 45-100 | LG 239 |
| 941-0244 | 45-278 | LG 240 |
| 941-0293 | 45-092 | LG 854 |
| 941-0310 | 45-050 | LG 224 |
| 941-0312 | 45-070 | LG 242 |
| 941-0313 | 45-095 | LG 855 |
| 941-0404 | 45-037 | LG 242 |
| 941-04136B | 45-834 | LG 242 |
| 941-0475 | 45-833 | LG 855 |
| 941-0484 | 45-112 | LG 241 |
| 941-0487 | 45-095 | LG 855 |
| 941-0487A | 45-095 | LG 855 |
| 9410490 | 45-082 | LG 854 |
| 941-0490 | 45-082 | LG 854 |
| 941-0523 | 45-045 | LG 249 |
| 941-0563 | 45-130 | LG 232 |
| 941-0563 | 45-273 | |
| 941-0569 | 45-047 | LG 241 |
| 941-0600 | 45-257 | LG 245 |
| 941-0656 | 45-071 | LG 242 |
| 941-0656A | 45-071 | LG 242 |
| 941-0659 | 45-046 | LG 241 |
| 941-0660 | 45-072 | LG 242 |
| 941-0706 | 45-075 | LG 241 |
| 941-0919 | 45-259 | LG 224 |
| 942-0122A | 98-019 | LG 516 |
| 942-0122B | 98-019 | LG 516 |
| 942-0171B | 98-037 | LG 574 |
| 942-04053 | 198-086 | LG 565 |
| 942-04053 | 591-938* | LG 407 |
| 942-04053 | 91-938* | LG 514 |
| 942-04053A | 198-086 | LG 565 |
| 942-04053A | 591-938* | LG 407 |
| 942-04053A | 91-938* | LG 514 |
| 942-04053B | 198-086 | LG 565 |
| 942-04053B | 591-938* | LG 407 |
| 942-04053B | 91-938* | LG 514 |
| 942-04053C | 198-086 | LG 565 |
| 942-04053C | 591-938* | LG 407 |
| 942-04053C | 91-938* | LG 514 |
| 942-04053-X | 591-938* | LG 407 |
| 942-04053-X | 91-938* | LG 514 |
| 942-04056A | 591-938* | LG 407 |
| 942-04056A | 91-938* | LG 514 |
| 942-04056A | 98-097 | LG 514 |
| 942-04056C | 591-938* | LG 407 |
| 942-04056C | 91-938* | LG 514 |
| 942-04056C | 98-097 | LG 514 |
| 942-04062 | 75-600 | LG 276 |

X



* OREGON® Gator™ replacement blade

| OEM No. | OREGON | Page |
|---|---|---|
| **MTD** | | |
| 942-04087 | 198-153 | LG 520 |
| 942-04087 | 598-629* | LG 575 |
| 942-04087 | 98-629* | LG 412 |
| 942-04124-X | 98-637* | LG 512 |
| 942-04125-X | 598-640* | LG 405 |
| 942-04125-X | 98-640* | LG 574 |
| 942-04126 | 98-090 | LG 519 |
| 942-04154 | 98-094 | LG 514 |
| 942-04154 | 98-671* | LG 514 |
| 942-04154A | 98-094 | LG 514 |
| 942-04154A | 98-671* | LG 514 |
| 942-04217 | 98-095 | LG 521 |
| 942-04244 | 96-401* | LG 404 |
| 942-04244 | 98-096 | LG 404 |
| 942-04244A | 96-401* | LG 404 |
| 942-04244A | 98-096 | LG 404 |
| 942-04244A-X | 96-401* | LG 404 |
| 942-04244-X | 96-401* | LG 404 |
| 942-04290 | 96-401* | LG 404 |
| 942-04290 | 98-096 | LG 404 |
| 942-04308 | 598-629* | LG 575 |
| 942-04308 | 98-093 | LG 411 |
| 942-04308 | 98-629* | LG 412 |
| 942-04308-X | 598-629* | LG 575 |
| 942-04308-X | 98-629* | LG 412 |
| 942-04312 | 598-629* | LG 575 |
| 942-04312 | 98-629* | LG 412 |
| 942-04312-X | 598-629* | LG 575 |
| 942-04312-X | 98-629* | LG 412 |
| 942-04338-0684 | 398-672* | LG 515 |
| 942-04338-0684 | 598-672* | LG 515 |
| 942-04338-0684 | 98-672* | LG 408 |
| 942-04360-0684 | 598-629* | LG 575 |
| 942-04360-0684 | 98-629* | LG 412 |
| 942-04361 | 96-401* | LG 404 |
| 942-04361-0684 | 96-401* | LG 404 |
| 942-04374 | 96-350* | LG 412 |
| 942-04380 | 598-631* | LG 390 |
| 942-04380 | 98-631* | LG 390 |
| 942-04380-0684 | 598-631* | LG 390 |
| 942-04380-0684 | 98-631* | LG 390 |
| 942-04410 | 598-629* | LG 575 |
| 942-04410 | 98-629* | LG 412 |
| 942-04410-0684 | 598-629* | LG 575 |
| 942-04410-0684 | 98-629* | LG 412 |
| 942-04415 | 596-300* | LG 519 |
| 942-04415 | 96-300* | LG 519 |
| 942-04415 | 98-071 | LG 411 |
| 942-04415-X | 596-300* | LG 519 |
| 942-04415-X | 96-300* | LG 519 |
| 942-04416 | 596-351* | LG 408 |
| 942-04416 | 96-351* | LG 408 |
| 942-04416 | 98-091 | LG 516 |
| 942-04416-X | 596-351* | LG 408 |
| 942-04416-X | 96-351* | LG 408 |
| 942-0473A | 91-057 | LG 409 |
| 942-0473A | 96-697* | LG 517 |
| 942-0473A | 98-044 | LG 409 |
| 942-0486 | 98-486 | LG 512 |
| 942-0486A | 98-486 | LG 512 |
| 942-0487A | 98-487 | LG 513 |
| 942-0493 | 98-493 | LG 409 |
| 942-0496 | 98-496 | LG 515 |
| 942-0496A | 98-496 | LG 515 |
| 942-0499 | 598-600* | LG 519 |
| 942-0499 | 98-499 | LG 519 |
| 942-0499 | 98-600* | LG 85 |
| 942-0499A | 598-600* | LG 519 |
| 942-0499A | 98-499 | LG 519 |
| 942-0499A | 98-600* | LG 85 |
| 942-0500 | 98-001 | LG 517 |
| 942-0503 | 598-600* | LG 519 |
| 942-0503 | 98-600* | LG 85 |
| 942-0504 | 98-044 | LG 409 |
| 942-0504A | 98-044 | LG 409 |
| 942-05052 | 98-152 | LG 514 |
| 942-05056 | 98-151 | LG 516 |
| 942-0508 | 598-600* | LG 519 |
| 942-0508 | 98-499 | LG 519 |
| 942-0508 | 98-600* | LG 85 |
| 942-0508A | 598-600* | LG 519 |
| 942-0508A | 98-499 | LG 519 |
| 942-0508A | 98-600* | LG 85 |
| 942-0522 | 98-005 | LG 521 |
| 942-0537 | 98-537 | LG 516 |
| 942-0538 | 598-600* | LG 519 |
| 942-0538 | 98-600* | LG 85 |
| 942-0542 | 98-057 | LG 513 |
| 942-0543 | 98-056 | LG 512 |
| 942-0610 | 198-058 | LG 517 |
| 942-0610 | 598-628* | LG 517 |
| 942-0610 | 98-628* | LG 389 |
| 942-0610A | 198-058 | LG 517 |
| 942-0610A | 598-628* | LG 517 |
| 942-0610A | 98-628* | LG 389 |
| 942-0611 | 198-063 | LG 513 |
| 942-0611 | 598-640* | LG 405 |
| 942-0611 | 98-640* | LG 574 |
| 942-0611A | 198-063 | LG 513 |
| 942-0611A | 598-640* | LG 405 |
| 942-0611A | 98-640* | LG 574 |
| 942-0611-X | 598-640* | LG 405 |
| 942-0611-X | 98-640* | LG 574 |
| 942-0612 | 98-061 | LG 404 |
| 942-0612 | 98-637* | LG 512 |
| 942-0612A | 98-061 | LG 404 |
| 942-0612A | 98-637* | LG 512 |
| 942-0612-X | 98-637* | LG 512 |
| 942-0616 | 198-059 | LG 403 |
| 942-0616 | 598-629* | LG 575 |
| 942-0616 | 98-629* | LG 412 |
| 942-0616A | 198-059 | LG 403 |
| 942-0616A | 598-629* | LG 575 |
| 942-0616A | 98-629* | LG 412 |
| 942-0616-X | 598-629* | LG 575 |
| 942-0616-X | 98-629* | LG 412 |
| 942-0620 | 98-001 | LG 517 |
| 942-0621 | 98-002 | LG 401 |
| 942-0621 | 98-102* | LG 410 |
| 942-0622 | 98-005 | LG 521 |
| 942-0623 | 598-064* | LG 514 |
| 942-0623 | 98-064-1 | LG 514 |
| 942-0640 | 98-068 | LG 389 |
| 942-0642 | 98-050 | LG 521 |
| 942-0642A | 98-050 | LG 521 |
| 942-0644 | 98-054 | LG 574 |
| 942-0644 | 98-634* | LG 405 |
| 942-0645 | 98-069 | LG 404 |
| 942-0645 | 98-670* | LG 512 |
| 942-0654 | 198-052 | LG 389 |
| 942-0654 | 598-628* | LG 517 |
| 942-0654 | 98-628* | LG 389 |
| 942-0656 | 598-629* | LG 575 |
| 942-0656 | 98-093 | LG 411 |
| 942-0656 | 98-629* | LG 412 |
| 942-0677 | 398-672* | LG 515 |
| 942-0677 | 598-672* | LG 515 |
| 942-0677 | 98-072 | LG 408 |
| 942-0677 | 98-672* | LG 408 |
| 942-0677A | 398-672* | LG 515 |
| 942-0677A | 598-672* | LG 515 |
| 942-0677A | 98-072 | LG 408 |
| 942-0677A | 98-672* | LG 408 |
| 942-0677B | 398-672* | LG 515 |
| 942-0677B | 598-672* | LG 515 |
| 942-0677B | 98-072 | LG 408 |
| 942-0677B | 98-672* | LG 408 |
| 942-0677-S | 398-672* | LG 515 |
| 942-0677-S | 598-672* | LG 515 |
| 942-0677-S | 98-672* | LG 408 |
| 942-0720 | 98-001 | LG 517 |
| 942-0721 | 98-007 | LG 401 |
| 942-0721 | 98-102* | LG 410 |
| 942-0722 | 98-005 | LG 521 |
| 942-0738 | 98-065 | LG 515 |
| 942-0739 | 92-140 | LG 516 |
| 942-0740 | 98-066 | LG 409 |
| 942-0741 | 198-049 | LG 518 |
| 942-0741 | 598-631* | LG 390 |
| 942-0741 | 98-631* | LG 390 |
| 942-0741A | 198-049 | LG 518 |
| 942-0741A | 598-631* | LG 390 |
| 942-0741A | 98-631* | LG 390 |
| 942-0741A-X | 598-631* | LG 390 |
| 942-0741A-X | 98-631* | LG 390 |
| 942-0741-X | 598-631* | LG 390 |
| 942-0741-X | 98-631* | LG 390 |
| 942-0742 | 98-051 | LG 521 |
| 942-0742A | 98-051 | LG 521 |
| 942-4360 | 598-629* | LG 575 |
| 942-4360 | 98-629* | LG 412 |
| 946-013A | 60-002 | LG 710 |
| 946-04007 | 46-337 | LG 713 |
| 946-04173 | 60-527 | LG 714 |
| 946-04173A | 60-527 | LG 714 |
| 946-04173B | 60-527 | LG 714 |
| 946-04173C | 60-527 | LG 714 |
| 946-04173D | 60-527 | LG 714 |
| 946-04173E | 60-527 | LG 714 |
| 946-04206A | 60-528 | LG 708 |
| 946-04229 | 46-032 | LG 705 |
| 946-04229B | 46-032 | LG 705 |
| 946-04230 | 46-033 | LG 714 |
| 946-04230A | 46-033 | LG 714 |
| 946-04236 | 46-034 | LG 714 |
| 946-04237 | 46-035 | LG 714 |
| 946-04256 | 46-036 | LG 714 |
| 946-04352 | 60-137 | LG 705 |
| 946-04352A | 60-137 | LG 705 |
| 946-04477 | 46-038 | LG 715 |
| 946-04528A | 46-039 | LG 705 |
| 946-04528B | 46-039 | LG 705 |
| 946-04556 | 60-140 | LG 715 |
| 946-04618 | 46-041 | LG 706 |
| 946-04618A | 46-041 | LG 706 |
| 946-04618B | 46-041 | LG 706 |
| 946-04618C | 46-041 | LG 706 |
| 946-04640 | 46-042 | LG 715 |
| 946-04642 | 46-043 | LG 715 |
| 946-04642A | 46-043 | LG 715 |
| 946-0477A | 46-317 | LG 707 |
| 946-0550 | 46-320 | LG 707 |
| 946-0552 | 46-310 | LG 713 |
| 946-0553 | 46-321 | LG 707 |
| 946-0554 | 46-316 | LG 707 |
| 946-0613A | 60-002 | LG 710 |
| 946-0614A | 60-124 | LG 710 |
| 946-0616A | 60-003 | LG 710 |
| 946-0630A | 60-021 | LG 706 |
| 946-0634 | 60-014 | LG 712 |
| 946-0671A | 46-319 | LG 712 |
| 946-0671A | 46-323 | LG 712 |
| 946-0674A | 60-012-0 | LG 712 |
| 946-0713A | 46-004 | LG 707 |
| 946-0875 | 60-005 | LG 704 |
| 946-0876 | 60-007 | LG 704 |
| 946-0896 | 46-339 | LG 710 |
| 946-0897 | 46-044 | LG 710 |
| 946-0897A | 46-044 | LG 710 |
| 946-0898 | 46-006 | LG 712 |
| 946-0901 | 46-338 | LG 704 |
| 946-0902 | 46-046 | LG 704 |
| 946-0903 | 46-047 | LG 704 |
| 946-0910A | 46-005 | LG 707 |
| 946-0912 | 60-045 | LG 707 |
| 946-0951A | 46-341 | LG 711 |
| 946-0956B | 46-049 | LG 705 |
| 946-0956C | 46-049 | LG 705 |
| 946-1085A | 60-039 | LG 706 |
| 946-1088 | 60-041 | LG 711 |
| 946-1100 | 60-042 | LG 712 |
| 946-1130 | 46-051 | LG 712 |
| 948-0108 | 45-277 | LG 242 |
| 948-0169 | 45-094 | LG 249 |
| 948-0227 | 45-088 | LG 240 |
| 948-0227A | 45-088 | LG 240 |
| 948-0229 | 45-088 | LG 240 |
| 948-0235 | 65-220 | LG 340 |
| 948-0300B | 65-221 | LG 341 |
| 948-0323 | 65-224 | LG 341 |
| 948-0323 | 80-146 | LG 341 |
| 948-0324 | 65-226 | LG 341 |
| 948-0365 | 65-228 | LG 341 |
| 948-0855 | 45-091 | LG 249 |
| 951-0171 | 07-404 | LG 766 |
| 951-10298 | 30-166 | LG 210 |
| 951-10630 | 33-256 | LG 946 |
| 951-10639 | 49-326 | LG 768 |
| 951-10639A | 49-326 | LG 768 |
| 951-10645 | 33-746 | LG 920 |
| 951-10645A | 33-746 | LG 920 |
| 951-10658 | 31-119 | LG 924 |
| 951-10955 | 31-120 | LG 924 |
| 951-11021 | 49-328 | LG 606 |
| 951-11021A | 49-328 | LG 606 |
| 951-11196 | 33-745 | LG 920 |
| 951-11219 | 49-331 | LG 604 |
| 951-11219A | 49-331 | LG 604 |
| 951-11310 | 31-121 | LG 924 |
| 951-11332 | 49-329 | LG 604 |
| 951-11332A | 49-329 | LG 604 |
| 951-11355 | 49-327 | LG 606 |
| 951-11355A | 49-327 | LG 606 |
| 951-12760A | 49-329 | LG 604 |
| 951-12762A | 49-331 | LG 604 |
| 951-12788A | 49-328 | LG 606 |
| 951-14151 | 31-119 | LG 924 |
| 951-14223 | 31-121 | LG 924 |
| 951-14231 | 49-327 | LG 606 |
| 951-3111 | 07-309 | LG 772 |
| 954-0101A | 75-148 | LG 300 |
| 954-0114 | 75-724 | LG 310 |
| 954-0125A | 15-589 | LG 273 |
| 954-0131 | 75-365 | LG 862 |
| 954-0142 | 15-590 | LG 300 |
| 954-0145 | 75-145 | LG 300 |
| 954-0145A | 75-145 | LG 300 |
| 954-0151 | 75-004 | LG 301 |
| 954-015A | 75-145 | LG 300 |
| 954-0178 | 75-179 | LG 310 |
| 954-0181 | 15-593 | LG 301 |
| 9540182 | 75-208 | LG 277 |
| 954-0190 | 15-594 | LG 274 |
| 954-0194 | 75-090 | LG 301 |
| 954-0197 | 75-079 | LG 301 |
| 954-0201 | 75-441 | LG 334 |
| 954-0218 | 15-595 | LG 274 |
| 954-0230 | 75-008 | LG 301 |
| 954-0234 | 75-441 | LG 334 |
| 954-0240 | 75-009 | LG 301 |
| 954-0241 | 75-012 | LG 301 |
| 954-0241A | 75-012 | LG 301 |
| 954-0266 | 75-016 | LG 301 |
| 954-0266A | 75-016 | LG 301 |
| 954-0280 | 75-002 | LG 301 |
| 954-0280A | 75-002 | LG 301 |
| 954-0281 | 75-281 | LG 301 |
| 954-0293 | 75-018 | LG 301 |
| 954-0325 | 15-601 | LG 274 |

X

# 2019 OEM X-Reference

| OEM No. | OREGON | Page |
|---|---|---|
| **MTD** | | |
| 954-0329A | 75-029 | LG 253 |
| 954-0339A | 75-021 | LG 274 |
| 954-0343 | 75-020 | LG 302 |
| 954-0346 | 75-091 | LG 302 |
| 954-0349 | 75-021 | LG 274 |
| 954-0350 | 75-035 | LG 302 |
| 954-0355 | 75-023 | LG 302 |
| 954-0358 | 75-024 | LG 302 |
| 954-0362 | 75-118 | LG 302 |
| 954-0364 | 75-025 | LG 253 |
| 954-0367 | 75-157 | LG 251 |
| 954-0369 | 75-027 | LG 302 |
| 954-0370 | 75-119 | LG 302 |
| 954-0371 | 75-028 | LG 302 |
| 954-0371A | 75-028 | LG 302 |
| 954-04001 | 75-673 | LG 305 |
| 954-04001A | 75-673 | LG 305 |
| 954-04002 | 75-709 | LG 305 |
| 954-04003A | 15-602 | LG 304 |
| 954-04013 | 15-603 | LG 304 |
| 954-04014 | 15-604 | LG 275 |
| 954-04032 | 75-249 | LG 305 |
| 954-04032A | 75-249 | LG 305 |
| 954-04032B | 75-249 | LG 305 |
| 954-04033 | 75-706 | LG 256 |
| 954-04041 | 15-013 | LG 256 |
| 954-04043 | 75-886 | LG 276 |
| 954-04043A | 75-886 | LG 276 |
| 954-04045 | 75-714 | LG 276 |
| 954-04047 | 15-605 | LG 275 |
| 954-04048 | 75-716 | LG 276 |
| 954-04050 | 115-219 | LG 305 |
| 954-04050A | 115-219 | LG 305 |
| 954-04060 | 75-813 | LG 276 |
| 954-04060B | 75-813 | LG 276 |
| 954-04062 | 75-600 | LG 276 |
| 954-04077 | 75-814 | LG 276 |
| 954-04093 | 15-053 | LG 305 |
| 954-04100 | 15-609 | LG 305 |
| 954-04118 | 75-815 | LG 277 |
| 954-04122 | 15-025 | LG 255 |
| 954-04138A | 15-112 | LG 305 |
| 954-04142 | 15-026 | LG 277 |
| 954-04201 | 15-052 | LG 315 |
| 954-04201A | 15-052 | LG 315 |
| 954-04207 | 15-613 | LG 305 |
| 954-04219 | 15-027 | LG 306 |
| 954-04240 | 15-028 | LG 277 |
| 954-04252 | 15-132 | LG 306 |
| 954-04259 | 15-133 | LG 306 |
| 954-04259A | 15-133 | LG 306 |
| 954-04265 | 15-100 | LG 306 |
| 954-0427 | 75-168 | LG 310 |
| 954-0430 | 75-158 | LG 251 |
| 954-0430A | 75-158 | LG 251 |
| 954-0430B | 75-158 | LG 251 |
| 954-0431 | 75-158 | LG 251 |
| 954-0433 | 75-029 | LG 253 |
| 954-0434 | 75-999 | LG 253 |
| 954-0438 | 15-616 | LG 303 |
| 954-0439 | 75-159 | LG 303 |
| 954-0440 | 75-161 | LG 255 |
| 954-0441 | 75-160 | LG 303 |
| 954-0443 | 75-109 | LG 303 |
| 954-0443A | 75-109 | LG 303 |
| 954-0446 | 75-674 | LG 303 |
| 954-0453 | 75-675 | LG 303 |
| 954-0461 | 75-824 | LG 274 |
| 954-0465 | 75-249 | LG 305 |
| 954-0467 | 75-995 | LG 303 |
| 954-0467A | 75-995 | LG 303 |
| 954-0468 | 75-993 | LG 303 |
| 954-0472 | 75-361 | LG 254 |
| 954-0474 | 75-362 | LG 256 |
| 954-0475 | 75-363 | LG 304 |
| 954-0476 | 75-364 | LG 304 |
| 954-0483 | 15-619 | LG 274 |
| 954-0485 | 75-263 | LG 304 |
| 954-0486 | 75-264 | LG 304 |
| 954-0486A | 75-264 | LG 304 |
| 954-0497 | 175-676 | LG 304 |
| 954-0497 | 75-676 | LG 304 |
| 954-0498 | 75-677 | LG 304 |
| 954-0640 | 75-823 | LG 254 |
| 954-0642 | 75-994 | LG 304 |
| 954-0935 | 75-092 | LG 304 |
| 954-3053 | 15-629 | LG 304 |
| 954-5834 | 15-025 | LG 255 |
| 956-0116 | 78-019 | LG 831 |
| 956-0217 | 34-010 | LG 831 |
| 956-0365 | 78-050 | LG 831 |
| 956-0399 | 34-036 | LG 821 |
| 956-04129 | 78-065 | LG 832 |
| 956-04129B | 78-065 | LG 832 |
| 956-04224 | 78-028 | LG 831 |
| 956-0437 | 34-014 | LG 831 |
| 956-0635 | 78-050 | LG 831 |
| 956-0980 | 44-369 | LG 837 |
| 956-0981A | 78-028 | LG 831 |
| 956-0981B | 78-028 | LG 831 |
| 956-0982 | 44-365 | LG 837 |
| 956-0983 | 44-367 | LG 838 |
| 956-1202 | 44-103 | LG 838 |
| 956-1208 | 78-029 | LG 831 |
| 956-1227 | 78-066 | LG 838 |
| 956-1229 | 78-046 | LG 826 |
| 956-1229 | 78-098 | LG 832 |
| 956-3045 | 34-066 | LG 832 |
| 956-3054 | 34-010 | LG 831 |
| 956-3105 | 78-047 | LG 832 |
| 964-0221 | 86-025 | LG 781 |
| 9664 | 33-019 | LG 948 |
| 97584 | 76-019 | LG 938 |
| 97585A | 76-021 | LG 938 |
| 983-0055 | 76-100 | LG 939 |
| 983-0055-0637 | 76-100 | LG 939 |
| 984-04027 | 73-050 | LG 846 |
| 984-04027A | 73-050 | LG 846 |
| 984-5485 | 73-050 | LG 846 |
| 98-499 | 98-067 | LG 520 |
| AF-43632 | 45-113 | LG 242 |
| CC-742-3033 | 591-635* | LG 411 |
| CC-742-3033 | 91-058 | LG 411 |
| CC-742-3033 | 91-635* | LG 411 |
| GW-1733439 | 75-148 | LG 300 |
| GW-741-0254 | 45-257 | LG 245 |
| GW-7420610 | 198-058 | LG 517 |
| GW-7420610 | 598-628* | LG 517 |
| GW-7420610 | 98-628* | LG 389 |
| GW-7420616 | 198-059 | LG 403 |
| GW-7420616 | 598-629* | LG 575 |
| GW-7420616 | 98-629* | LG 412 |
| GW-7540350 | 75-035 | LG 302 |
| GW-M6020004 | 45-257 | LG 245 |
| IH-384881-R94 | 45-000 | LG 237 |
| IH-83614-C1 | 91-442 | LG 518 |
| OCC-01004719 | 91-144 | LG 454 |
| OCC-01004719 | 96-677* | LG 372 |
| OCC-01010168 | 592-015* | LG 515 |
| OCC-01010168 | 92-015 | LG 407 |
| OCC-742-04068 | 596-387* | LG 407 |
| OCC-742-04068 | 96-387* | LG 515 |
| OCC-742-04068 | 98-087 | LG 407 |
| OCC-742-04101 | 591-635* | LG 411 |
| OCC-742-04101 | 91-058 | LG 411 |
| OCC-742-04101 | 91-635* | LG 411 |
| OCC-742-04126 | 98-090 | LG 519 |
| OCC-742-04244 | 96-401* | LG 404 |
| OCC-742-04244 | 98-096 | LG 404 |
| OCC-742-0739 | 92-140 | LG 516 |
| OCC-742-3036 | 596-373* | LG 512 |
| OCC-742-3036 | 91-073 | LG 512 |
| OEM-710-0890 | 80-743 | LG 852 |
| OEM-725-0267A | 33-386 | LG 942 |
| OEM-734-3058B | 72-308-1 | LG 1042 |
| OEM-738-04124 | 80-749 | LG 853 |
| OEM-742-0171B | 98-037 | LG 574 |
| OEM-742-04308 | 598-629* | LG 575 |
| OEM-742-04308 | 98-093 | LG 411 |
| OEM-742-04308 | 98-629* | LG 412 |
| OEM-742-0473 | 98-044 | LG 409 |
| OEM-742-0473A | 98-044 | LG 409 |
| OEM-742-0496 | 98-496 | LG 515 |
| OEM-742-0499 | 598-600* | LG 519 |
| OEM-742-0499 | 98-499 | LG 519 |
| OEM-742-0499 | 98-600* | LG 85 |
| OEM-742-0499A | 598-600* | LG 519 |
| OEM-742-0499A | 98-499 | LG 519 |
| OEM-742-0499A | 98-600* | LG 85 |
| OEM-742-0610 | 198-058 | LG 517 |
| OEM-742-0610 | 598-628* | LG 517 |
| OEM-742-0610 | 98-628* | LG 389 |
| OEM-742-0616 | 198-059 | LG 403 |
| OEM-742-0616 | 598-629* | LG 575 |
| OEM-742-0616 | 98-629* | LG 412 |
| OEM-742-0620 | 98-001 | LG 517 |
| OEM-742-0621 | 98-002 | LG 401 |
| OEM-742-0621 | 98-102* | LG 410 |
| OEM-742-0622 | 98-005 | LG 521 |
| OEM-742-0623 | 598-064* | LG 514 |
| OEM-742-0623 | 98-064-1 | LG 514 |
| OEM-742-0640 | 98-068 | LG 389 |
| OEM-742-0642 | 98-050 | LG 521 |
| OEM-742-0677 | 398-672* | LG 515 |
| OEM-742-0677 | 598-672* | LG 515 |
| OEM-742-0677 | 98-072 | LG 408 |
| OEM-742-0677 | 98-672* | LG 408 |
| OEM-742-0721 | 98-007 | LG 401 |
| OEM-742-0721 | 98-102* | LG 410 |
| OEM-742-0722 | 98-005 | LG 521 |
| OEM-742-0738 | 98-065 | LG 515 |
| OEM-742-0740 | 98-066 | LG 409 |
| OEM-742-0741 | 198-049 | LG 518 |
| OEM-742-0741 | 598-631* | LG 390 |
| OEM-742-0741 | 98-631* | LG 390 |
| OEM-742-0742 | 98-051 | LG 521 |
| OEM-754-0101A | 75-148 | LG 300 |
| OEM-754-0142 | 15-590 | LG 300 |
| OEM-754-0358 | 75-024 | LG 302 |
| OEM-754-0362 | 75-118 | LG 302 |
| OEM-754-0369 | 75-027 | LG 302 |
| OEM-754-04032 | 75-249 | LG 305 |
| OEM-754-04062 | 75-600 | LG 276 |
| OEM-754-0438 | 15-616 | LG 303 |
| OEM-754-0453 | 75-675 | LG 303 |
| OEM-754-0485 | 75-263 | LG 304 |
| OEM-781-0080 | 40-316 | LG 586 |
| OEM-784-5038B | 73-020 | LG 850 |
| OEM-784-5576 | 73-054 | LG 848 |
| OEM-784-5579 | 73-058 | LG 848 |
| OEM-784-5579A | 73-058 | LG 848 |
| OEM-784-5580 | 73-031 | LG 850 |
| OEM-784-5581 | 73-057 | LG 848 |
| OEM-784-5582A | 73-055 | LG 848 |
| TC-35062 | 33-089 | LG 946 |
| **MTS** | | |
| 917-0912 | 82-502 | LG 894 |
| **MURRAY** | | |
| 0037X3 | 75-367 | LG 306 |
| 0037X3MA | 75-367 | LG 306 |
| 020005SE | 60-420 | LG 717 |
| 020005SE | 60-427 | LG 717 |
| 020005SEMA | 60-420 | LG 717 |
| 020005SEMA | 60-427 | LG 717 |
| 020062 | 02-531 | |
| 020062MA | 02-531 | |
| 020270 | 72-107 | LG 1029 |
| 020270MA | 72-107 | LG 1029 |
| 020551 | 82-243 | LG 902 |
| 020615 | 44-323 | LG 838 |
| 020615MA | 44-323 | LG 838 |
| 020616 | 85-001 | LG 908 |
| 020616MA | 85-001 | LG 908 |
| 020616S | 85-001 | LG 908 |
| 020697 | 02-535 | |
| 020729 | 42-008 | LG 945 |
| 020729MA | 42-008 | LG 945 |
| 020930 | 595-601* | LG 400 |
| 020930 | 95-601* | LG 423 |
| 020930 | 97-105 | LG 523 |
| 021031MA | 45-104 | LG 939 |
| 021409 | 34-023 | LG 822 |
| 021409MA | 34-023 | LG 822 |
| 022860E701 | 97-110 | LG 525 |
| 023211 | 34-043 | LG 823 |
| 023211MA | 34-043 | LG 823 |
| 023339 | 34-022 | LG 822 |
| 023339MA | 34-022 | LG 822 |
| 023342 | 35-010 | LG 809 |
| 023343MA | 35-010 | LG 809 |
| 023739 | 44-332 | LG 838 |
| 023739MA | 44-332 | LG 838 |
| 02377MA | 33-392 | LG 944 |
| 02400 | 595-601* | LG 400 |
| 02400 | 95-601* | LG 423 |
| 02400 | 97-105 | LG 523 |
| 024039 | 80-014 | LG 727 |
| 024039MA | 80-014 | LG 727 |
| 024116 | 595-601* | LG 400 |
| 024116 | 95-601* | LG 423 |
| 024116 | 97-105 | LG 523 |
| 024273 | 33-015 | LG 948 |
| 024273MA | 33-015 | LG 948 |
| 024285 | 33-331 | LG 730 |
| 024384 | 82-243 | LG 902 |
| 024578 | 85-005 | |
| 024615 | 45-087 | LG 243 |
| 024615MA | 45-087 | LG 243 |
| 025116 | 595-601* | LG 400 |
| 025116 | 95-601* | LG 423 |
| 025116 | 97-105 | LG 523 |
| 02697MA | 02-535 | |
| 037X075MA | 75-152 | LG 308 |
| 037X12 | 75-112 | LG 306 |
| 037X12MA | 75-112 | LG 306 |
| 037X22 | 75-022 | LG 307 |
| 037X22MA | 75-022 | LG 307 |
| 037X26 | 75-026 | LG 307 |
| 037X26MA | 75-026 | LG 307 |
| 037X38 | 75-038 | LG 307 |
| 037X38MA | 75-038 | LG 307 |
| 037X40 | 75-040 | LG 306 |
| 037X40MA | 75-040 | LG 306 |
| 037X43 | 75-005 | LG 307 |
| 037X43MA | 75-005 | LG 307 |
| 037X45 | 75-045 | LG 307 |
| 037X45MA | 75-045 | LG 307 |
| 037X57 | 75-057 | LG 307 |
| 037X57A | 75-057 | LG 307 |
| 037X57MA | 75-057 | LG 307 |
| 037X61 | 75-061 | LG 307 |
| 037X61AMA | 75-061 | LG 307 |
| 037X61MA | 75-061 | LG 307 |
| 037X61WMA | 75-061 | LG 307 |
| 037X62 | 75-041 | LG 255 |
| 037X62A | 75-041 | LG 255 |
| 037X62MA | 75-041 | LG 255 |

X



* OREGON® Gator™ replacement blade

## MURRAY

| OEM No. | OREGON | Page |
|---|---|---|
| 037X62WMA | 75-041 | LG 255 |
| 037X63 | 75-063 | LG 307 |
| 037X63A | 75-063 | LG 307 |
| 037X63MA | 75-063 | LG 307 |
| 037X64 | 75-122 | LG 307 |
| 037X64A | 75-122 | LG 307 |
| 037X64MA | 75-065 | LG 307 |
| 037X64MA | 75-122 | LG 307 |
| 037X65 | 75-065 | LG 307 |
| 037X65MA | 75-065 | LG 307 |
| 037X65MA | 75-122 | LG 307 |
| 037X66 | 75-094 | LG 252 |
| 037X66MA | 75-094 | LG 252 |
| 037X68 | 75-103 | LG 308 |
| 037X68MA | 75-103 | LG 308 |
| 037X69 | 75-151 | LG 308 |
| 037X69MA | 75-151 | LG 308 |
| 037X70 | 75-001 | LG 308 |
| 037X70A | 75-001 | LG 308 |
| 037X70MA | 75-001 | LG 308 |
| 037X73MA | 15-638 | LG 308 |
| 037X75 | 75-152 | LG 308 |
| 037X75A | 75-152 | LG 308 |
| 037X75MA | 75-152 | LG 308 |
| 037X75WMA | 75-152 | LG 308 |
| 037X80 | 75-042 | LG 308 |
| 037X80MA | 75-042 | LG 308 |
| 037X81MA | 15-641 | LG 308 |
| 037X83MA | 15-642 | LG 308 |
| 037X86 | 75-266 | LG 254 |
| 037X86A | 75-266 | LG 254 |
| 037X86MA | 75-266 | LG 254 |
| 037X87 | 75-209 | LG 308 |
| 037X87MA | 75-209 | LG 308 |
| 037X88 | 75-135 | LG 308 |
| 037X88A | 75-135 | LG 308 |
| 037X88HDMA | 75-135 | LG 308 |
| 037X88MA | 75-135 | LG 308 |
| 037X88WMA | 75-135 | LG 308 |
| 037X89 | 75-129 | LG 255 |
| 037X89A | 75-129 | LG 255 |
| 037X89HDMA | 75-129 | LG 255 |
| 037X89MA | 75-129 | LG 255 |
| 037X92 | 75-210 | LG 309 |
| 037X92MA | 75-210 | LG 309 |
| 037X93 | 75-267 | LG 309 |
| 037X93MA | 75-267 | LG 309 |
| 037X96 | 75-964 | LG 309 |
| 037X96MA | 75-964 | LG 309 |
| 037X97MA | 15-644 | LG 308 |
| 042174 | 72-106 | LG 1029 |
| 042225E701 | 97-015 | LG 527 |
| 042225E701MA | 97-015 | LG 527 |
| 042569 | 46-300 | LG 717 |
| 042569MA | 46-300 | LG 717 |
| 042785E701 | 97-016 | LG 524 |
| 042785E701MA | 97-016 | LG 524 |
| 042785E701WMA | 97-016 | LG 524 |
| 043827 | 46-315 | LG 717 |
| 043827MA | 46-315 | LG 717 |
| 043828 | 46-327 | LG 717 |
| 043828MA | 46-327 | LG 717 |
| 043881 | 46-328 | LG 717 |
| 043881MA | 46-328 | LG 717 |
| 054211 | 65-206 | LG 342 |
| 054211MA | 65-206 | LG 342 |
| 054212 | 33-032 | LG 742 |
| 054212MA | 33-032 | LG 742 |
| 054372 | 595-601* | LG 400 |
| 054372 | 95-601* | LG 423 |
| 054372 | 97-105 | LG 523 |
| 054390E701 | 595-601* | LG 400 |
| 054390E701 | 95-601* | LG 423 |
| 054390E701 | 97-105 | LG 523 |
| 054390E701MA | 97-105 | LG 523 |
| 055452 | 44-340 | LG 838 |
| 055700 | 70-301 | LG 959 |
| 055700MA | 70-301 | LG 959 |
| 055962 | 82-250 | LG 902 |
| 055962MA | 82-250 | LG 902 |
| 055969E701 | 97-330 | LG 528 |
| 055969E701MA | 97-330 | LG 528 |
| 056105 | 45-022 | LG 243 |
| 056105MA | 45-022 | LG 243 |
| 056217E701 | 97-330 | LG 528 |
| 056217E701MA | 97-330 | LG 528 |
| 056246E701 | 97-330 | LG 528 |
| 056246E701MA | 97-330 | LG 528 |
| 056246E701WMA | 97-330 | LG 528 |
| 056250E701 | 97-003 | |
| 056250E701MA | 97-003 | |
| 056251E701 | 97-004 | |
| 056251E701 | 97-604* | LG 525 |
| 056251E701MA | 97-004 | |
| 056251E701MA | 97-604* | LG 525 |
| 056252E701 | 597-601* | LG 527 |
| 056252E701 | 97-005 | LG 527 |
| 056252E701 | 97-601* | LG 527 |
| 056252E701MA | 597-601* | LG 527 |
| 056252E701MA | 97-005 | LG 527 |
| 056252E701MA | 97-601* | LG 527 |
| 056419 | 33-024 | LG 945 |
| 056419MA | 33-024 | LG 945 |
| 056631E701 | 597-606* | LG 522 |
| 056631E701 | 97-017 | LG 537 |
| 056631E701 | 97-606* | LG 522 |
| 056631E701MA | 597-606* | LG 522 |
| 056631E701MA | 97-017 | LG 537 |
| 056631E701MA | 97-606* | LG 522 |
| 056631E701WMA | 97-017 | LG 537 |
| 071132 | 72-114 | LG 1035 |
| 071132MA | 72-114 | LG 1035 |
| 071133 | 72-113 | LG 1035 |
| 071133MA | 72-113 | LG 1035 |
| 07113E701 | 97-001 | LG 527 |
| 071499E701 | 97-001 | LG 527 |
| 090118 | 34-004 | LG 832 |
| 090242 | 44-356 | LG 839 |
| 090242MA | 44-356 | LG 839 |
| 090330SEMA | 35-021 | LG 810 |
| 0905101E701 | 597-601* | LG 527 |
| 0905101E701 | 97-014 | LG 527 |
| 0905101E701 | 97-601* | LG 527 |
| 090594 | 70-312 | LG 959 |
| 090594MA | 70-312 | LG 959 |
| 090840 | 07-102 | LG 774 |
| 090840MA | 07-102 | LG 774 |
| 090905 | 82-243 | LG 902 |
| 091178 | 34-824 | LG 832 |
| 091179 | 34-826 | LG 833 |
| 091179 | 78-027 | LG 832 |
| 091179MA | 34-826 | LG 833 |
| 091179MA | 78-027 | LG 832 |
| 091334 | 45-043 | LG 243 |
| 091334MA | 45-043 | LG 243 |
| 091590 | 78-021 | LG 832 |
| 091590MA | 78-021 | LG 832 |
| 091742E701 | 97-107 | LG 524 |
| 091742E701MA | 97-107 | LG 524 |
| 091749E700 | 45-116 | LG 939 |
| 091749E701 | 45-116 | LG 939 |
| 091749E701MA | 45-116 | LG 939 |
| 091769 | 44-341 | LG 839 |
| 091769MA | 44-341 | LG 839 |
| 091801 | 34-822 | LG 832 |
| 091801MA | 34-822 | LG 832 |
| 091801MA | 78-021 | LG 832 |
| 091827SEC | 45-116 | LG 939 |
| 091827SECMA | 45-116 | LG 939 |
| 091846 | 33-396 | LG 944 |
| 091846MA | 33-396 | LG 944 |
| 091871E701 | 97-109 | LG 525 |
| 091871E701 | 97-604* | LG 525 |
| 091871E701MA | 97-109 | LG 525 |
| 091871E701MA | 97-604* | LG 525 |
| 091871HT | 97-109 | LG 525 |
| 091903 | 82-244 | LG 910 |
| 091903MA | 82-244 | LG 910 |
| 091921 | 85-012 | LG 909 |
| 091922 | 85-008 | LG 909 |
| 091922MA | 85-008 | LG 909 |
| 091943 | 44-341 | LG 839 |
| 091943MA | 44-341 | LG 839 |
| 091951 | 44-340 | LG 838 |
| 092002E701 | 97-006 | LG 525 |
| 092002E701 | 97-604* | LG 525 |
| 092002E701MA | 97-006 | LG 525 |
| 092002E701MA | 97-604* | LG 525 |
| 092002HT | 97-006 | LG 525 |
| 092003E701 | 597-602* | LG 524 |
| 092003E701 | 97-010 | LG 524 |
| 092003E701MA | 597-602* | LG 524 |
| 092003E701MA | 97-010 | LG 524 |
| 092117E701 | 597-606* | LG 522 |
| 092117E701 | 97-123 | LG 537 |
| 092117E701 | 97-606* | LG 522 |
| 092117E701MA | 597-606* | LG 522 |
| 092117E701MA | 97-123 | LG 537 |
| 092117E701MA | 97-606* | LG 522 |
| 092127 | 44-342 | LG 839 |
| 092127MA | 44-342 | LG 839 |
| 092127MA | 44-356 | LG 839 |
| 092265 | 72-094 | LG 1042 |
| 092265MA | 72-094 | LG 1042 |
| 092317 | 07-309 | LG 772 |
| 092317MA | 07-309 | LG 772 |
| 092377 | 33-392 | LG 944 |
| 092377MA | 33-392 | LG 944 |
| 092418E701 | 97-008 | LG 526 |
| 092425 | 44-343 | LG 841 |
| 092425MA | 44-343 | LG 841 |
| 092466 | 65-208 | LG 342 |
| 092466MA | 65-208 | LG 342 |
| 092466SEMA | 65-208 | LG 342 |
| 092491E701 | 97-020 | LG 526 |
| 092543E701 | 597-602* | LG 524 |
| 092543E701 | 97-021 | LG 524 |
| 092543E701MA | 597-602* | LG 524 |
| 092543E701MA | 97-021 | LG 524 |
| 092544E701 | 97-024 | LG 525 |
| 092544E701MA | 97-024 | LG 525 |
| 092556 | 33-383 | LG 944 |
| 092556MA | 33-383 | LG 944 |
| 092574 | 82-243 | LG 902 |
| 092683 | 72-094 | LG 1042 |
| 092683MA | 72-094 | LG 1042 |
| 092849 | 85-029 | LG 909 |
| 092849MA | 85-029 | LG 909 |
| 093064 | 45-023 | LG 249 |
| 093064MA | 45-023 | LG 249 |
| 094129 | 85-028 | LG 908 |
| 094129MA | 85-028 | LG 908 |
| 094136 | 33-085 | LG 948 |
| 094136MA | 33-085 | LG 948 |
| 094199 | 44-339 | LG 841 |
| 094199MA | 44-339 | LG 841 |
| 094199MAB | 44-339 | LG 841 |
| 094592 | 44-331 | LG 841 |
| 094592MA | 44-331 | LG 841 |
| 094613 | 33-331 | LG 730 |
| 094692E701 | 97-018 | LG 523 |
| 094692E701MA | 97-018 | LG 523 |
| 095068MA | 78-048 | LG 833 |
| 095100E701 | 197-019 | LG 539 |
| 095100E701 | 597-601* | LG 527 |
| 095100E701 | 97-601* | LG 527 |
| 095100E701MA | 197-019 | LG 539 |
| 095100E701MA | 597-601* | LG 527 |
| 095100E701MA | 97-601* | LG 527 |
| 095101E701 | 597-601* | LG 527 |
| 095101E701 | 97-020 | LG 526 |
| 095101E701 | 97-601* | LG 527 |
| 095101E701MA | 597-601* | LG 527 |
| 095101E701MA | 97-020 | LG 526 |
| 095101E701MA | 97-601* | LG 527 |
| 095103E701 | 97-024 | LG 525 |
| 095103E701MA | 97-024 | LG 525 |
| 095103E701WMA | 97-024 | LG 525 |
| 095104E701 | 597-602* | LG 524 |
| 095104E701 | 97-021 | LG 524 |
| 095104E701MA | 597-602* | LG 524 |
| 095104E701MA | 97-021 | LG 524 |
| 095104E701WMA | 97-021 | LG 524 |
| 09510E701 | 97-008 | LG 526 |
| 09510E701 | 97-021 | LG 524 |
| 1001200 | 82-245 | |
| 1001200MA | 82-245 | |
| 1001709 | 82-028 | LG 902 |
| 1001709MA | 82-028 | LG 902 |
| 1002004MA | 33-331 | LG 730 |
| 1101093 | 60-025-0 | LG 716 |
| 1101093MA | 60-025-0 | LG 716 |
| 1101120E701 | 97-001 | LG 527 |
| 1101120E701MA | 97-001 | LG 527 |
| 1101120E701WMA | 97-001 | LG 527 |
| 1101181 | 60-026-0 | LG 716 |
| 1101181MA | 60-026-0 | LG 716 |
| 1101360 | 60-030-0 | LG 716 |
| 1101360MA | 60-030-0 | LG 716 |
| 1101366 | 60-031-0 | LG 716 |
| 1101366MA | 60-031-0 | LG 716 |
| 1101823 | 99-134 | LG 527 |
| 1101823E701 | 99-134 | LG 527 |
| 1101823E701MA | 99-134 | LG 527 |
| 121223 | 60-522 | LG 715 |
| 121223MA | 60-522 | LG 715 |
| 133X4 | 70-307 | LG 960 |
| 134X1 | 71-600 | LG 956 |
| 138971 | 195-032 | LG 425 |
| 138971 | 596-900* | LG 380 |
| 138971 | 96-900* | LG 526 |
| 146154 | 33-331 | LG 730 |
| 146154 | 33-334 | LG 730 |
| 1501217 | 80-015 | LG 853 |
| 1501217MA | 80-015 | LG 853 |
| 165X2 | 48-001 | LG 914 |
| 165X27 | 48-001 | LG 914 |
| 165X27MA | 48-001 | LG 914 |
| 165X58 | 48-001 | LG 914 |
| 165X58MA | 48-001 | LG 914 |
| 1731898ASM | 391-610* | LG 554 |
| 1731898ASM | 91-610 | LG 554 |
| 1733324SM | 15-014 | LG 251 |
| 1736043AYP | 91-616 | LG 543 |
| 1736043AYP | 96-398* | LG 525 |
| 1736044AYP | 91-615 | LG 522 |
| 1737228BM | 599-132* | LG 522 |
| 1737228BM | 99-132 | LG 539 |
| 1737228BZYP | 599-132* | LG 522 |
| 1737228BZYP | 99-132 | LG 539 |
| 1739889AYP | 599-132* | LG 522 |
| 1740718AYP | 73-059 | LG 850 |
| 1740718HMA | 73-059 | LG 850 |
| 175441X428 | 60-043 | LG 716 |
| 180054 | 195-062 | LG 376 |
| 180054 | 596-615* | LG 529 |
| 180054 | 96-615* | LG 461 |
| 187256 | 195-072 | LG 530 |
| 187256 | 595-605* | LG 422 |

X

# 2019 OEM X-Reference

| OEM No. | OREGON | Page |
|---|---|---|
| **MURRAY** | | |
| 187256 | 95-605* | LG 463 |
| 1922127SM | 72-106 | LG 1029 |
| 193957 | 195-033 | LG 400 |
| 193957 | 595-601* | LG 400 |
| 193957 | 95-601* | LG 423 |
| 20005 | 60-420 | LG 717 |
| 20005 | 60-427 | LG 717 |
| 20005MA | 60-420 | LG 717 |
| 20005MA | 60-427 | LG 717 |
| 20045E701 | 97-016 | LG 524 |
| 20046 | 97-015 | LG 527 |
| 20046E701 | 97-015 | LG 527 |
| 20046HT | 97-015 | LG 527 |
| 20062 | 02-531 | |
| 20108 | 32-112 | LG 676 |
| 20270 | 72-107 | LG 1029 |
| 20278 | 72-107 | LG 1029 |
| 2045HT | 97-016 | LG 524 |
| 2055 | 45-257 | LG 245 |
| 20551 | 82-023 | LG 902 |
| 20551 | 82-243 | LG 902 |
| 20557 | 75-367 | LG 306 |
| 20613 | 34-042 | LG 823 |
| 20613 | 34-824 | LG 832 |
| 20615 | 44-323 | LG 838 |
| 20616 | 85-001 | LG 908 |
| 20617 | 65-206 | LG 342 |
| 20682 | 48-001 | LG 914 |
| 20697 | 02-535 | |
| 20729 | 42-008 | LG 945 |
| 20730 | 02-191 | LG 676 |
| 20731 | 32-107 | LG 676 |
| 20732 | 32-107 | LG 676 |
| 20734 | 32-107 | LG 676 |
| 20930 | 595-601* | LG 400 |
| 20930 | 95-601* | LG 423 |
| 20930 | 97-105 | LG 523 |
| 20930E701 | 97-105 | LG 523 |
| 20930HT | 97-105 | LG 523 |
| 21027 | 72-106 | LG 1029 |
| 21031 | 45-104 | LG 939 |
| 21064 | 33-386 | LG 942 |
| 21064PA | 33-386 | LG 942 |
| 21223 | 60-522 | LG 715 |
| 21223PA | 60-522 | LG 715 |
| 21261 | 33-330 | LG 729 |
| 21261 | 33-331 | LG 730 |
| 21261 | 33-337 | LG 730 |
| 21409 | 34-023 | LG 822 |
| 21409 | 34-826 | LG 833 |
| 21409MA | 34-826 | LG 833 |
| 21615 | 75-111 | LG 306 |
| 21649 | 75-112 | LG 306 |
| 22127 | 72-106 | LG 1029 |
| 22860 | 97-110 | LG 525 |
| 22860E701 | 97-110 | LG 525 |
| 22860E701MA | 97-110 | LG 525 |
| 22860HT | 97-110 | LG 525 |
| 23098 | 75-040 | LG 306 |
| 23211 | 34-043 | LG 823 |
| 23238 | 34-024 | LG 822 |
| 23238 | 34-822 | LG 832 |
| 23238 | 78-021 | LG 832 |
| 23339 | 34-022 | LG 822 |
| 23343 | 35-010 | LG 809 |
| 23468 | 32-107 | LG 676 |
| 23483 | 35-010 | LG 809 |
| 23711 | 07-308 | LG 772 |
| 23711 | 07-315 | LG 772 |
| 23739 | 44-332 | LG 838 |
| 23748 | 75-040 | LG 306 |
| 23749 | 75-022 | LG 307 |
| 2400 | 595-601* | LG 400 |
| 2400 | 95-601* | LG 423 |
| 2400 | 97-105 | LG 523 |
| 24039 | 80-014 | LG 727 |
| 24116 | 595-601* | LG 400 |
| 24116 | 95-601* | LG 423 |
| 24116 | 97-105 | LG 523 |
| 24116E601 | 97-105 | LG 523 |
| 24116HT | 97-105 | LG 523 |
| 24159 | 07-102 | LG 774 |
| 24273 | 33-015 | LG 948 |
| 24273MA | 33-015 | LG 948 |
| 24285 | 33-330 | LG 729 |
| 24285 | 33-331 | LG 730 |
| 24285 | 33-337 | LG 730 |
| 24304 | 15-630 | LG 306 |
| 24304 | 75-005 | LG 307 |
| 24367 | 45-043 | LG 243 |
| 24368 | 45-022 | LG 243 |
| 24384 | 82-023 | LG 902 |
| 24384 | 82-243 | LG 902 |
| 24405 | 70-312 | LG 959 |
| 24419 | 70-334 | LG 959 |
| 24466 | 33-331 | LG 730 |
| 24515ACC | 67-002 | LG 965 |
| 24515ACC | 67-015 | LG 965 |
| 24525ACC | 67-017 | LG 965 |
| 24528ACC | 67-018 | LG 965 |
| 24530ACC | 67-005 | LG 965 |
| 24532 | 82-244 | LG 910 |
| 24578 | 85-005 | |
| 24615 | 45-087 | LG 243 |
| 24615MA | 45-087 | LG 243 |
| 24820ACC | 67-015 | LG 965 |
| 25116 | 595-601* | LG 400 |
| 25116 | 95-601* | LG 423 |
| 25116 | 97-105 | LG 523 |
| 255 423 | 33-116 | LG 735 |
| 300841 | 34-820 | LG 833 |
| 300920 | 34-826 | LG 833 |
| 301171 | 80-015 | LG 853 |
| 301171MA | 80-015 | LG 853 |
| 301380E701 | 73-059 | LG 850 |
| 301380E701MA | 73-059 | LG 850 |
| 301380E717MA | 73-059 | LG 850 |
| 310326 | 34-820 | LG 833 |
| 310326MA | 34-820 | LG 833 |
| 320046E701 | 97-015 | LG 527 |
| 320046E701MA | 97-015 | LG 527 |
| 326108 | 33-116 | LG 735 |
| 326108MA | 33-116 | LG 735 |
| 33085 | 33-085 | LG 948 |
| 33-3865 | 33-331 | LG 730 |
| 340696 | 97-015 | LG 527 |
| 3748 | 75-040 | LG 306 |
| 37X100 | 75-204 | LG 309 |
| 37X100 | 75-368 | LG 309 |
| 37X100MA | 75-204 | LG 309 |
| 37X100MA | 75-368 | LG 309 |
| 37X101 | 75-996 | LG 309 |
| 37X101MA | 75-996 | LG 309 |
| 37X11 | 75-111 | LG 306 |
| 37X110 | 75-679 | LG 309 |
| 37X110MA | 75-679 | LG 309 |
| 37X12 | 75-112 | LG 306 |
| 37X21 | 75-040 | LG 306 |
| 37X22 | 75-022 | LG 307 |
| 37X26 | 75-026 | LG 307 |
| 37X27 | 75-005 | LG 307 |
| 37X27MA | 75-005 | LG 307 |
| 37X3 | 75-367 | LG 306 |
| 37X33 | 75-045 | LG 307 |
| 37x35 | 15-634 | LG 307 |
| 37x35 | 75-045 | LG 307 |
| 37X38 | 75-038 | LG 307 |
| 37X38MA | 75-038 | LG 307 |
| 37X39 | 75-005 | LG 307 |
| 37X40 | 75-040 | LG 306 |
| 37X43 | 75-005 | LG 307 |
| 37X43MA | 75-005 | LG 307 |
| 37X45 | 75-045 | LG 307 |
| 37X45MA | 75-045 | LG 307 |
| 37X57 | 75-057 | LG 307 |
| 37X57MA | 75-057 | LG 307 |
| 37X61 | 75-061 | LG 307 |
| 37X61MA | 75-061 | LG 307 |
| 37x62 | 175-041 | LG 307 |
| 37X62 | 75-041 | LG 255 |
| 37X62MA | 75-041 | LG 255 |
| 37X63 | 75-063 | LG 307 |
| 37X63MA | 75-063 | LG 307 |
| 37X64 | 75-122 | LG 307 |
| 37X65 | 75-065 | LG 307 |
| 37X65 | 75-122 | LG 307 |
| 37X65MA | 75-065 | LG 307 |
| 37X65MA | 75-122 | LG 307 |
| 37X66 | 75-094 | LG 252 |
| 37X66MA | 75-094 | LG 252 |
| 37X68 | 75-103 | LG 308 |
| 37X69 | 75-151 | LG 308 |
| 37X69MA | 75-151 | LG 308 |
| 37X70 | 75-001 | LG 308 |
| 37X70MA | 75-001 | LG 308 |
| 37X73 | 15-638 | LG 308 |
| 37X75 | 75-152 | LG 308 |
| 37X75MA | 75-152 | LG 308 |
| 37X80 | 75-042 | LG 308 |
| 37X80MA | 75-042 | LG 308 |
| 37X81 | 15-641 | LG 308 |
| 37X81MA | 15-641 | LG 308 |
| 37X83 | 15-642 | LG 308 |
| 37X86 | 75-266 | LG 254 |
| 37X86MA | 75-266 | LG 254 |
| 37X87 | 75-209 | LG 308 |
| 37X87MA | 75-209 | LG 308 |
| 37X88 | 175-135 | LG 308 |
| 37X88 | 75-135 | LG 308 |
| 37X89 | 75-129 | LG 255 |
| 37X89MA | 75-129 | LG 255 |
| 37X90 | 15-643 | LG 308 |
| 37X92 | 75-210 | LG 309 |
| 37X92MA | 75-210 | LG 309 |
| 37X93 | 75-267 | LG 309 |
| 37X93MA | 75-267 | LG 309 |
| 37X96 | 75-964 | LG 309 |
| 37X96MA | 75-964 | LG 309 |
| 37X97 | 15-644 | LG 308 |
| 37X98 | 75-368 | LG 309 |
| 3887 | 15-645 | LG 306 |
| 3887MA | 15-645 | LG 306 |
| 39979 | 45-079 | LG 249 |
| 39979MA | 45-079 | LG 249 |
| 400060 | 02-535 | |
| 402075 | 76-025 | LG 941 |
| 402075MA | 76-025 | LG 941 |
| 40223 | 34-826 | LG 833 |
| 402400 | 595-601* | LG 400 |
| 402400 | 95-601* | LG 423 |
| 402400 | 97-105 | LG 523 |
| 403007 | 70-334 | LG 959 |
| 403056 | 45-043 | LG 243 |
| 407045 | 71-400 | LG 956 |
| 407045MA | 71-400 | LG 956 |
| 407046 | 71-101 | LG 956 |
| 407046MA | 71-101 | LG 956 |
| 407047 | 71-102 | LG 956 |
| 407047MA | 71-102 | LG 956 |
| 407048 | 71-816 | LG 956 |
| 407048MA | 71-816 | LG 956 |
| 407051 | 71-105 | LG 957 |
| 420005 | 60-420 | LG 717 |
| 420005 | 60-427 | LG 717 |
| 420005MA | 60-420 | LG 717 |
| 420005MA | 60-427 | LG 717 |
| 420045 | 97-016 | LG 524 |
| 420613 | 34-042 | LG 823 |
| 420613 | 34-824 | LG 832 |
| 4206130 | 34-824 | LG 832 |
| 420613MA | 34-042 | LG 823 |
| 420613MA | 34-824 | LG 832 |
| 420616 | 85-001 | LG 908 |
| 420616MA | 85-001 | LG 908 |
| 420729 | 42-008 | LG 945 |
| 420729MA | 42-008 | LG 945 |
| 42093 | 514366 | LG 700 |
| 42093 | 60-400 | LG 700 |
| 42096 | 514366 | LG 700 |
| 42096 | 60-400 | LG 700 |
| 421064 | 33-386 | LG 942 |
| 42106MA | 33-386 | LG 942 |
| 421409 | 34-023 | LG 822 |
| 421409 | 34-826 | LG 833 |
| 421409 | 78-027 | LG 832 |
| 421409MA | 34-826 | LG 833 |
| 421409MA | 78-027 | LG 832 |
| 42174 | 72-106 | LG 1029 |
| 42225 | 97-015 | LG 527 |
| 42225E701 | 97-015 | LG 527 |
| 42225E701MA | 97-015 | LG 527 |
| 42225MA | 97-015 | LG 527 |
| 4225E701MA | 97-015 | LG 527 |
| 422860 | 97-110 | LG 525 |
| 423238 | 34-024 | LG 822 |
| 423238 | 78-021 | LG 832 |
| 423238MA | 34-024 | LG 822 |
| 423238MA | 34-822 | LG 832 |
| 423238MA | 78-021 | LG 832 |
| 424285 | 33-330 | LG 729 |
| 424285 | 33-331 | LG 730 |
| 424285 | 33-337 | LG 730 |
| 424285MA | 33-331 | LG 730 |
| 424578 | 85-005 | |
| 424578MA | 85-005 | |
| 42569 | 46-300 | LG 717 |
| 42569MA | 46-300 | LG 717 |
| 42739 | 97-110 | LG 525 |
| 42785E701 | 97-016 | LG 524 |
| 42785E701MA | 97-016 | LG 524 |
| 42785HT | 97-016 | LG 524 |
| 42786 | 97-015 | LG 527 |
| 42877 | 514366 | LG 700 |
| 42877 | 60-400 | LG 700 |
| 429305 | 595-601* | LG 400 |
| 429305 | 95-601* | LG 423 |
| 429305 | 97-105 | LG 523 |
| 42930S | 595-601* | LG 400 |
| 42930S | 95-601* | LG 423 |
| 42930S | 97-105 | LG 523 |
| 430013 | 33-396 | LG 944 |
| 430161 | 33-392 | LG 944 |
| 430405 | 33-015 | LG 948 |
| 430674 | 33-383 | LG 944 |
| 43827 | 46-315 | LG 717 |
| 43827MA | 46-315 | LG 717 |
| 43828 | 46-327 | LG 717 |
| 43828MA | 46-327 | LG 717 |
| 43881 | 46-328 | LG 717 |
| 442225 | 97-015 | LG 527 |
| 442225MA | 97-015 | LG 527 |
| 44225 | 97-001 | LG 527 |
| 442785 | 97-016 | LG 524 |
| 442785MA | 97-016 | LG 524 |
| 454390 | 97-105 | LG 523 |
| 4543903 | 595-601* | LG 400 |
| 4543903 | 95-601* | LG 423 |
| 4543903 | 97-105 | LG 523 |
| 4543903MA | 595-601* | LG 400 |

X



* OREGON® Gator™ replacement blade

## MURRAY

| OEM No. | OREGON | Page |
|---|---|---|
| 4543903MA | 95-601* | LG 423 |
| 4543903MA | 97-105 | LG 523 |
| 454390MA | 595-601* | LG 400 |
| 454390MA | 95-601* | LG 423 |
| 454390MA | 97-105 | LG 523 |
| 455962 | 82-250 | LG 902 |
| 455962MA | 82-250 | LG 902 |
| 456217 | 97-330 | LG 528 |
| 4562173 | 97-330 | LG 528 |
| 4562173MA | 97-330 | LG 528 |
| 456217MA | 97-330 | LG 528 |
| 456251 | 97-004 | |
| 456251MA | 97-004 | |
| 456252 | 597-601* | LG 527 |
| 456252 | 97-005 | LG 527 |
| 456252 | 97-601* | LG 527 |
| 456252MA | 597-601* | LG 527 |
| 456252MA | 97-005 | LG 527 |
| 456252MA | 97-601* | LG 527 |
| 456631 | 597-606* | LG 522 |
| 456631 | 97-017 | LG 537 |
| 456631 | 97-606* | LG 522 |
| 4566313 | 597-606* | LG 522 |
| 4566313 | 97-017 | LG 537 |
| 4566313 | 97-606* | LG 522 |
| 4566313MA | 597-606* | LG 522 |
| 4566313MA | 97-017 | LG 537 |
| 4566313MA | 97-606* | LG 522 |
| 456631MA | 597-606* | LG 522 |
| 456631MA | 97-017 | LG 537 |
| 456631MA | 97-606* | LG 522 |
| 471113 | 97-001 | LG 527 |
| 4714493MA | 97-001 | LG 527 |
| 471499 | 97-001 | LG 527 |
| 4714993 | 97-001 | LG 527 |
| 4714993MA | 97-001 | LG 527 |
| 471499MA | 97-001 | LG 527 |
| 490118 | 34-004 | LG 832 |
| 490118MA | 34-004 | LG 832 |
| 491334 | 45-043 | LG 243 |
| 491334MA | 45-043 | LG 243 |
| 491742 | 97-107 | LG 524 |
| 491742MA | 97-107 | LG 524 |
| 491871 | 97-119 | LG 525 |
| 491871 | 97-604* | LG 525 |
| 491871MA | 97-119 | LG 525 |
| 491871MA | 97-604* | LG 525 |
| 491921 | 85-012 | LG 909 |
| 491921MA | 85-012 | LG 909 |
| 491922 | 85-008 | LG 909 |
| 491922MA | 85-008 | LG 909 |
| 491926 | 65-208 | LG 342 |
| 4919263 | 65-208 | LG 342 |
| 4919263MA | 65-208 | LG 342 |
| 491926MA | 65-208 | LG 342 |
| 492117 | 597-606* | LG 522 |
| 492117 | 97-123 | LG 537 |
| 492117 | 97-606* | LG 522 |
| 492117MA | 597-606* | LG 522 |
| 492117MA | 97-123 | LG 537 |
| 492117MA | 97-606* | LG 522 |
| 492418 | 597-601* | LG 527 |
| 492418 | 97-008 | LG 526 |
| 492418 | 97-601* | LG 527 |
| 492418MA | 597-601* | LG 527 |
| 492418MA | 97-008 | LG 526 |
| 492418MA | 97-601* | LG 527 |
| 492419A | 97-020 | LG 526 |
| 492574 | 82-023 | LG 902 |
| 492574 | 82-243 | LG 902 |
| 492574MA | 82-023 | LG 902 |
| 492574MA | 82-243 | LG 902 |
| 494199 | 44-339 | LG 841 |
| 494199MA | 44-339 | LG 841 |
| 495100 | 197-019 | LG 539 |
| 495100 | 597-601* | LG 527 |
| 495100 | 97-601* | LG 527 |
| 4951003 | 197-019 | LG 539 |
| 4951003 | 597-601* | LG 527 |
| 4951003 | 97-601* | LG 527 |
| 4951003MA | 197-019 | LG 539 |
| 4951003MA | 597-601* | LG 527 |
| 4951003MA | 97-601* | LG 527 |
| 495100MA | 197-019 | LG 539 |
| 495100MA | 597-601* | LG 527 |
| 495100MA | 97-601* | LG 527 |
| 4951043 | 597-602* | LG 524 |
| 4951043 | 97-021 | LG 524 |
| 4951043MA | 597-602* | LG 524 |
| 4951043MA | 97-021 | LG 524 |
| 495104MA | 597-602* | LG 524 |
| 495104MA | 97-021 | LG 524 |
| 49562 | 45-257 | LG 245 |
| 49562MA | 45-257 | LG 245 |
| 540MA | 97-107 | LG 524 |
| 5412H | 33-383 | LG 944 |
| 54211 | 65-206 | LG 342 |
| 54212 | 33-032 | LG 742 |
| 54372 | 595-601* | LG 400 |
| 54372 | 95-601* | LG 423 |
| 54372 | 97-105 | LG 523 |
| 54372E | 97-105 | LG 523 |
| 54372HT | 97-105 | LG 523 |
| 54390 | 595-601* | LG 400 |
| 54390 | 95-601* | LG 423 |
| 54390 | 97-105 | LG 523 |
| 54390E54390E701 | 97-105 | LG 523 |
| 54390HT | 595-601* | LG 400 |
| 54390HT | 95-601* | LG 423 |
| 54390HT | 97-105 | LG 523 |
| 54743 | 33-331 | LG 730 |
| 5510 | 597-606* | LG 522 |
| 5510 | 97-017 | LG 537 |
| 5510 | 97-606* | LG 522 |
| 5510MA | 597-606* | LG 522 |
| 5510MA | 97-017 | LG 537 |
| 5510MA | 97-606* | LG 522 |
| 5511 | 597-606* | LG 522 |
| 5511 | 97-123 | LG 537 |
| 5511 | 97-606* | LG 522 |
| 5511MA | 597-606* | LG 522 |
| 5511MA | 97-123 | LG 537 |
| 5511MA | 97-606* | LG 522 |
| 5518MA | 97-110 | LG 525 |
| 5519 | 597-602* | LG 524 |
| 5519 | 97-021 | LG 524 |
| 5519MA | 597-602* | LG 524 |
| 5519MA | 97-021 | LG 524 |
| 5527 | 597-601* | LG 527 |
| 5527 | 97-020 | LG 526 |
| 5527 | 97-601* | LG 527 |
| 5527MA | 597-601* | LG 527 |
| 5527MA | 97-020 | LG 526 |
| 5527MA | 97-601* | LG 527 |
| 5536 | 97-022 | LG 524 |
| 5536MA | 97-022 | LG 524 |
| 5539 | 197-019 | LG 539 |
| 5539 | 597-601* | LG 527 |
| 5539 | 97-601* | LG 527 |
| 5539MA | 197-019 | LG 539 |
| 5539MA | 597-601* | LG 527 |
| 5539MA | 97-601* | LG 527 |
| 5540 | 97-021 | LG 524 |
| 5540 | 97-107 | LG 524 |
| 5540MA | 97-021 | LG 524 |
| 5543MA | 97-024 | LG 525 |
| 55452 | 44-340 | LG 838 |
| 5547 | 97-119 | LG 525 |
| 5547 | 97-604* | LG 525 |
| 5547MA | 97-119 | LG 525 |
| 5547MA | 97-604* | LG 525 |
| 5548MA | 97-016 | LG 524 |
| 5553 | 97-330 | LG 528 |
| 5553MA | 97-001 | LG 527 |
| 5553MA | 97-330 | LG 528 |
| 55541 | 45-259 | LG 224 |
| 5557 | 97-330 | LG 528 |
| 5557MA | 97-330 | LG 528 |
| 5570 | 99-134 | LG 527 |
| 55700 | 70-301 | LG 959 |
| 5570MA | 99-134 | LG 527 |
| 55962 | 82-250 | LG 902 |
| 55962E701 | 82-250 | LG 902 |
| 55962MA | 82-250 | LG 902 |
| 55969 | 97-330 | LG 528 |
| 55969E701 | 97-330 | LG 528 |
| 55969E701MA | 97-330 | LG 528 |
| 55969HT | 97-330 | LG 528 |
| 55969MA | 97-330 | LG 528 |
| 56060E701 | 97-330 | LG 528 |
| 56060HT | 97-330 | LG 528 |
| 56105 | 45-022 | LG 243 |
| 56212E701 | 97-330 | LG 528 |
| 56217E701 | 97-330 | LG 528 |
| 56246E700 | 97-330 | LG 528 |
| 56246E701 | 97-330 | LG 528 |
| 56246E701MA | 97-330 | LG 528 |
| 56250 | 97-003 | |
| 56250E701 | 97-003 | |
| 56250E701MA | 97-003 | |
| 56251 | 97-004 | |
| 56251E701 | 97-004 | |
| 56251E701MA | 97-004 | |
| 56252 | 97-005 | LG 527 |
| 56252E701 | 597-601* | LG 527 |
| 56252E701 | 97-005 | LG 527 |
| 56252E701 | 97-601* | LG 527 |
| 56252E701MA | 97-005 | LG 527 |
| 56419 | 33-024 | LG 945 |
| 56631E700 | 597-606* | LG 522 |
| 56631E700 | 97-017 | LG 537 |
| 56631E700 | 97-606* | LG 522 |
| 56631E701 | 597-606* | LG 522 |
| 56631E701 | 97-017 | LG 537 |
| 56631E701 | 97-606* | LG 522 |
| 56631E701MA | 97-017 | LG 537 |
| 57211 | 33-015 | LG 948 |
| 579932 | 15-014 | LG 251 |
| 579932MA | 15-014 | LG 251 |
| 581264 | 15-646 | LG 306 |
| 581264MA | 15-646 | LG 306 |
| 585416 | 115-209 | LG 306 |
| 585416MA | 115-209 | LG 306 |
| 585436 | 15-647 | LG 306 |
| 585436MA | 15-647 | LG 306 |
| 642785 | 97-016 | LG 524 |
| 642785E701 | 97-016 | LG 524 |
| 65060 | 97-330 | LG 528 |
| 656252-853 | 97-005 | LG 527 |
| 656631 | 597-606* | LG 522 |
| 656631 | 97-017 | LG 537 |
| 656631 | 97-606* | LG 522 |
| 671132 | 72-114 | LG 1035 |
| 671133 | 72-113 | LG 1035 |
| 671894-853 | 97-001 | LG 527 |
| 671921E701 | 97-022 | LG 524 |
| 672059E701 | 97-001 | LG 527 |
| 672441 | 72-004 | LG 1035 |
| 672441MA | 72-004 | LG 1035 |
| 672735 | 97-001 | LG 527 |
| 672735E701 | 97-001 | LG 527 |
| 672763 | 97-022 | LG 524 |
| 672763E701 | 97-022 | LG 524 |
| 672763E701MA | 97-022 | LG 524 |
| 672763E701WMA | 97-022 | LG 524 |
| 672835 | 60-032-0 | LG 716 |
| 672835MA | 60-032-0 | LG 716 |
| 672840 | 60-033-0 | LG 716 |
| 672840MA | 60-033-0 | LG 716 |
| 690020MA | 44-343 | LG 841 |
| 690387MA | 78-055 | LG 833 |
| 690411 | 65-204 | LG 342 |
| 690411MA | 65-204 | LG 342 |
| 690549MA | 78-049 | LG 833 |
| 7101751 | 597-602* | LG 524 |
| 7101751 | 97-021 | LG 524 |
| 7101751A | 597-602* | LG 524 |
| 7101751A | 97-021 | LG 524 |
| 7101751AMA | 597-602* | LG 524 |
| 7101751AMA | 97-021 | LG 524 |
| 710193 | 75-266 | LG 254 |
| 710209 | 75-041 | LG 255 |
| 710213 | 75-135 | LG 308 |
| 710216 | 75-094 | LG 252 |
| 710217 | 75-129 | LG 255 |
| 7103288YP | 591-611* | LG 527 |
| 7103288YP | 91-611 | LG 527 |
| 710341 | 75-209 | LG 308 |
| 7104196BMYP | 596-628* | LG 528 |
| 7104196BMYP | 96-628* | LG 528 |
| 7104196BMYP | 99-131 | LG 555 |
| 710531 | 75-061 | LG 307 |
| 710532 | 75-210 | LG 309 |
| 710533 | 75-267 | LG 309 |
| 71113 | 97-001 | LG 527 |
| 71113E701 | 97-001 | LG 527 |
| 71132 | 72-114 | LG 1035 |
| 71133 | 72-113 | LG 1035 |
| 71180 | 60-420 | LG 717 |
| 71499 | 97-001 | LG 527 |
| 71499E701 | 97-001 | LG 527 |
| 71849E701 | 97-001 | LG 527 |
| 721392 | 197-019 | LG 539 |
| 721392 | 597-601* | LG 527 |
| 721392 | 97-601* | LG 527 |
| 721392A | 197-019 | LG 539 |
| 721392A | 597-601* | LG 527 |
| 721392A | 97-601* | LG 527 |
| 721392BM | 197-019 | LG 539 |
| 721392BM | 597-601* | LG 527 |
| 721392BM | 97-601* | LG 527 |
| 740194 | 60-006 | LG 716 |
| 740194MA | 60-006 | LG 716 |
| 760928 | 15-648 | LG 306 |
| 760928MA | 15-648 | LG 306 |
| 7701016 | 60-006 | LG 716 |
| 7701016MA | 60-006 | LG 716 |
| 77010793MA | 97-330 | LG 528 |
| 7701100MA | 33-330 | LG 729 |
| 7701100MA | 33-331 | LG 730 |
| 774004 | 97-016 | LG 524 |
| 774048 | 97-018 | LG 523 |
| 774048MA | 97-018 | LG 523 |
| 774052 | 97-018 | LG 523 |
| 7740523 | 97-018 | LG 523 |
| 7740523MA | 97-018 | LG 523 |
| 774052MA | 97-018 | LG 523 |
| 774089 | 34-822 | LG 832 |
| 774089 | 78-021 | LG 832 |
| 774089MA | 34-822 | LG 832 |
| 774089MA | 78-021 | LG 832 |
| 774090 | 44-340 | LG 838 |
| 774090MA | 44-340 | LG 838 |
| 774091 | 85-028 | LG 908 |
| 774091MA | 85-028 | LG 908 |
| 776113 | 60-015 | LG 716 |
| 776113MA | 60-015 | LG 716 |
| 7769203 | 197-019 | LG 539 |
| 7769203 | 597-601* | LG 527 |

X

# 2019 OEM X-Reference

| OEM No. | OREGON | Page |
|---|---|---|
| **MURRAY** | | |
| 7769203 | 97-601* | LG 527 |
| 7769205 | 97-018 | LG 523 |
| 7771132 | 72-114 | LG 1035 |
| 7771132MA | 72-114 | LG 1035 |
| 7771133 | 72-113 | LG 1035 |
| 7771133MA | 72-113 | LG 1035 |
| 780061 | 73-059 | LG 850 |
| 780061MA | 73-059 | LG 850 |
| 90118 | 34-004 | LG 832 |
| 90242 | 44-356 | LG 839 |
| 90330PA | 35-021 | LG 810 |
| 90330SE | 35-021 | LG 810 |
| 90594 | 70-312 | LG 959 |
| 90840 | 07-102 | LG 774 |
| 90905 | 82-023 | LG 902 |
| 90905 | 82-243 | LG 902 |
| 91178 | 34-824 | LG 832 |
| 91179 | 34-826 | LG 833 |
| 91179 | 78-027 | LG 832 |
| 91179MA | 78-027 | LG 832 |
| 91291 | 33-331 | LG 730 |
| 91334 | 45-043 | LG 243 |
| 91334MA | 45-043 | LG 243 |
| 91590 | 78-021 | LG 832 |
| 91590MA | 78-021 | LG 832 |
| 91742E700 | 97-107 | LG 524 |
| 91742E701 | 97-107 | LG 524 |
| 91742E701MA | 97-107 | LG 524 |
| 91742HT | 97-107 | LG 524 |
| 91749 | 45-116 | LG 939 |
| 91749E701 | 45-116 | LG 939 |
| 91769 | 44-341 | LG 839 |
| 91801 | 34-822 | LG 832 |
| 91801 | 78-021 | LG 832 |
| 91827 | 45-116 | LG 939 |
| 91846 | 33-396 | LG 944 |
| 91846MA | 33-396 | LG 944 |
| 91871 | 97-109 | LG 525 |
| 91871-853 | 97-109 | LG 525 |
| 91871E700 | 97-119 | LG 525 |
| 91871E700 | 97-604* | LG 525 |
| 91871E701 | 97-109 | LG 525 |
| 91871E701MA | 97-109 | LG 525 |
| 91871HT | 97-109 | LG 525 |
| 91903 | 82-244 | LG 910 |
| 91921 | 85-012 | LG 909 |
| 91922 | 85-008 | LG 909 |
| 91926 | 65-208 | LG 342 |
| 91943 | 44-341 | LG 839 |
| 91951 | 44-340 | LG 838 |
| 92002 | 97-006 | LG 525 |
| 92002E701 | 97-006 | LG 525 |
| 92002E701 | 97-604* | LG 525 |
| 92002E701MA | 97-006 | LG 525 |
| 92002HT | 97-006 | LG 525 |
| 92003E701 | 597-602* | LG 524 |
| 92003E701 | 97-010 | LG 524 |
| 92003E701MA | 97-010 | LG 524 |
| 92003HT | 97-010 | LG 524 |
| 92117 | 97-123 | LG 537 |
| 92117E700 | 597-606* | LG 522 |
| 92117E700 | 97-123 | LG 537 |
| 92117E700 | 97-606* | LG 522 |
| 92127 | 44-342 | LG 839 |
| 92127 | 44-356 | LG 839 |
| 92265 | 72-094 | LG 1042 |
| 92265MA | 72-094 | LG 1042 |
| 92317 | 07-309 | LG 772 |
| 92317MA | 07-309 | LG 772 |
| 92377 | 33-392 | LG 944 |
| 92377MA | 33-392 | LG 944 |
| 92418 | 97-008 | LG 526 |
| 92418 | 97-020 | LG 526 |
| 92418-853 | 97-020 | LG 526 |
| 92418E701 | 597-601* | LG 527 |
| 92418E701 | 97-008 | LG 526 |
| 92418E701 | 97-601* | LG 527 |
| 92419 | 597-601* | LG 527 |
| 92419 | 97-014 | LG 527 |
| 92419 | 97-601* | LG 527 |
| 92419E701 | 597-601* | LG 527 |
| 92419E701 | 97-014 | LG 527 |
| 92419E701 | 97-601* | LG 527 |
| 92425 | 44-343 | LG 841 |
| 924285 | 33-330 | LG 729 |
| 924285 | 33-331 | LG 730 |
| 924285 | 33-337 | LG 730 |
| 92466 | 65-208 | LG 342 |
| 92543E701 | 97-021 | LG 524 |
| 92544E701 | 97-024 | LG 525 |
| 92556 | 33-383 | LG 944 |
| 92574 | 82-023 | LG 902 |
| 92574 | 82-243 | LG 902 |
| 92683 | 72-094 | LG 1042 |
| 92683MA | 72-094 | LG 1042 |
| 92849 | 85-029 | LG 909 |
| 93064 | 45-023 | LG 249 |
| 93064MA | 45-023 | LG 249 |
| 94129 | 85-028 | LG 908 |
| 94136 | 33-085 | LG 948 |
| 94199 | 44-339 | LG 841 |
| 94592 | 44-331 | LG 841 |
| 94613 | 33-331 | LG 730 |
| 94692 | 97-018 | LG 523 |
| 94692E700 | 97-018 | LG 523 |
| 94692E701 | 97-018 | LG 523 |
| 94692E701MA | 97-018 | LG 523 |
| 95068 | 78-048 | LG 833 |
| 95100 | 197-019 | LG 539 |
| 95100 | 597-601* | LG 527 |
| 95100 | 97-601* | LG 527 |
| 95100E701 | 197-019 | LG 539 |
| 95100E701 | 597-601* | LG 527 |
| 95100E701 | 97-601* | LG 527 |
| 95101-853 | 97-020 | LG 526 |
| 95101E701 | 597-601* | LG 527 |
| 95101E701 | 97-020 | LG 526 |
| 95101E701 | 97-601* | LG 527 |
| 95101E701MA | 97-014 | LG 527 |
| 95101E701MA | 97-020 | LG 526 |
| 95103E701 | 97-024 | LG 525 |
| 95103E701MA | 97-024 | LG 525 |
| 95104E701 | 597-602* | LG 524 |
| 95104E701 | 97-021 | LG 524 |
| 951103E701 | 97-024 | LG 525 |
| 95272 | 78-048 | LG 833 |
| 95309MA | 44-331 | LG 841 |
| MT121223MA | 60-522 | LG 715 |
| MT1733324SM | 15-014 | LG 251 |
| MT579932 | 15-014 | LG 251 |
| MT579932MA | 15-014 | LG 251 |
| MT585416 | 115-209 | LG 306 |
| MT585416MA | 115-209 | LG 306 |
| MU037X87 | 75-209 | LG 308 |
| MU037X87MA | 75-209 | LG 308 |
| MU091801MA | 34-822 | LG 832 |
| MU092377 | 33-392 | LG 944 |
| MU092377MA | 33-392 | LG 944 |
| MU092574 | 82-243 | LG 902 |
| MU094136 | 33-085 | LG 948 |
| MU094136MA | 33-085 | LG 948 |
| MU1002004MA | 33-331 | LG 730 |
| MU24273 | 33-015 | LG 948 |
| MU37X110 | 75-679 | LG 309 |
| MU37X110MA | 75-679 | LG 309 |
| MU37X57 | 75-057 | LG 307 |
| MU37X65 | 75-065 | LG 307 |
| MU37X65 | 75-122 | LG 307 |
| MU37X87 | 75-209 | LG 308 |
| MU55962 | 82-250 | LG 902 |
| MU740194 | 60-006 | LG 716 |
| MU91436 | 33-085 | LG 948 |
| MU91951 | 44-340 | LG 838 |
| MU92265 | 72-094 | LG 1042 |
| MU92683 | 72-094 | LG 1042 |
| MU94136 | 33-085 | LG 948 |
| **NATIONAL FARMER STORE** | | |
| 754-0935 | 75-092 | LG 304 |
| 954-0935 | 75-092 | LG 304 |
| **NGK** | | |
| B4LM | 77-301-1 | LG 864 |
| B4LM | 77-313-1 | LG 865 |
| B6HS | 77-321-1 | LG 865 |
| B6S | 77-317-1 | LG 865 |
| B8ES | 77-323-1 | LG 865 |
| BCPR5ES | 77-303-1 | LG 865 |
| BM6A | 77-302-1 | LG 864 |
| BM7A | 77-308-1 | LG 865 |
| BM7F | 77-316-1 | LG 865 |
| BMR6A | 77-306-1 | LG 865 |
| BP5ES | 77-310-1 | LG 865 |
| BP6ES | 77-315-1 | LG 865 |
| BPM6A | 77-309-1 | LG 865 |
| BPM6F | 77-318-1 | LG 865 |
| BPM7A | 77-300-1 | LG 864 |
| BPM7A | 77-311-1 | LG 865 |
| BPMR4A | 77-319-1 | LG 865 |
| BPMR4A | 77-324-1 | LG 865 |
| BPMR7A | 77-307-1 | LG 865 |
| BPR5ES | 77-314-1 | LG 865 |
| BPR6ES | 77-312-1 | LG 865 |
| BR2LM | 77-305-1 | LG 865 |
| VBOF 8032 45 | 33-200 | LG 866 |
| WA20M-U | 77-304-1 | LG 865 |
| **NOMA** | | |
| 1325 | 76-070-0 | LG 726 |
| 162313 | 45-087 | LG 243 |
| 27788 | 34-037 | LG 821 |
| 300295 | 33-386 | LG 942 |
| 300575 | 15-649 | LG 309 |
| 300680 | 75-136 | LG 309 |
| 300687 | 33-395 | LG 943 |
| 300687 | 33-396 | LG 944 |
| 300841 | 34-820 | LG 833 |
| 300841 | 78-021 | LG 832 |
| 300842 | 75-137 | LG 309 |
| 3008689P | 75-136 | LG 309 |
| 300920 | 34-023 | LG 822 |
| 301137 | 45-087 | LG 243 |
| 301172 | 80-748 | LG 852 |
| 301935P | 75-214 | LG 309 |
| 302031 | 33-032 | LG 742 |
| 302289 | 15-650 | LG 259 |
| 302418 | 73-022 | LG 847 |
| 302611 | 72-100 | |
| 303241 | 15-651 | LG 259 |
| 305148 | 15-652 | LG 259 |
| 305530 | 06-004 | LG 805 |
| 305720 | 33-397 | LG 942 |
| 307534 | 82-493 | LG 869 |
| 308701 | 15-653 | LG 310 |
| 310240 | 82-514 | LG 869 |
| 310326 | 34-820 | LG 833 |
| 310326 | 78-021 | LG 832 |
| 310675 | 82-020 | LG 903 |
| 313883 | 76-070-0 | LG 726 |
| 314108 | 75-138 | LG 310 |
| 314120 | 75-934 | LG 310 |
| 315542 | 31-907 | LG 929 |
| 319005 | 75-208 | LG 277 |
| 319596 | 75-289 | LG 863 |
| 319596MA | 75-289 | LG 863 |
| 321205 | 75-977 | LG 310 |
| 32986 | 75-179 | LG 310 |
| 33125 | 15-654 | LG 309 |
| 332489 | 04-723 | |
| 3526 | 15-655 | LG 309 |
| 35384 | 45-295 | LG 232 |
| 36576 | 72-301 | LG 1037 |
| 39605 | 72-301 | LG 1037 |
| 39831 | 72-304 | LG 1038 |
| 39979 | 45-079 | LG 249 |
| 40195 | 45-098 | LG 243 |
| 41204 | 33-240 | LG 948 |
| 41585 | 72-301 | LG 1037 |
| 421064 | 33-386 | LG 942 |
| 424285 | 33-330 | LG 729 |
| 424285 | 33-337 | LG 730 |
| 42690 | 07-392 | LG 767 |
| 42879 | 07-400 | LG 767 |
| 43066 | 75-168 | LG 310 |
| 44745 | 33-386 | LG 942 |
| 45186 | 15-657 | LG 259 |
| 46476 | 34-013 | LG 824 |
| 48044 | 75-179 | LG 310 |
| 49562 | 45-257 | LG 245 |
| 49878 | 15-659 | LG 309 |
| 49907 | 33-024 | LG 945 |
| 52323 | 33-330 | LG 729 |
| 52323 | 33-331 | LG 730 |
| 52323 | 33-337 | LG 730 |
| 52407 | 45-009 | LG 853 |
| 52694 | 34-013 | LG 824 |
| 53415 | 514366 | LG 700 |
| 53415 | 60-400 | LG 700 |
| 53716 | 33-330 | LG 729 |
| 53716 | 33-331 | LG 730 |
| 53716 | 33-337 | LG 730 |
| 53830 | 76-070-0 | LG 726 |
| 54446 | 72-108 | LG 1031 |
| 54765 | 35-021 | LG 810 |
| 54766 | 35-021 | LG 810 |
| 54837 | 73-025 | LG 855 |
| 56992 | 33-024 | LG 945 |
| 57214P | 75-142 | LG 310 |
| 57353 | 514366 | LG 700 |
| 57353 | 60-400 | LG 700 |
| 57556 | 15-660 | LG 309 |
| 577023 | 73-025 | LG 855 |
| 58170 | 75-143 | LG 310 |
| 672440 | 72-005 | LG 1036 |
| 779057 | 82-514 | LG 869 |
| 779058 | 82-020 | LG 903 |
| 779066 | 82-493 | LG 869 |
| 782966 | 33-331 | LG 730 |
| 9005383 | 76-070-0 | LG 726 |
| **NOUVELLES GALERIES** | | |
| 754-0145 | 75-145 | LG 300 |
| 954-0145 | 75-145 | LG 300 |
| 954-0145A | 75-145 | LG 300 |
| 954-015A | 75-145 | LG 300 |
| **OKLAHOMA TIRE&SUPPLY** | | |
| 21615 | 75-111 | LG 306 |
| 21615954-0935 | 75-111 | LG 306 |
| 21649 | 75-112 | LG 306 |
| 754-0145 | 75-145 | LG 300 |
| 754-0151 | 75-004 | LG 301 |
| 754-0201 | 75-441 | LG 334 |
| 754-0234 | 75-441 | LG 334 |
| 754-0240 | 75-009 | LG 301 |
| 754-0935 | 75-092 | LG 304 |
| 954-0145 | 75-145 | LG 300 |
| 954-0145A | 75-145 | LG 300 |
| 954-0151 | 75-004 | LG 301 |

X



* OREGON® Gator™ replacement blade

| OEM No. | OREGON | Page |
|---|---|---|
| 954-015A | 75-145 | LG 300 |
| 954-0201 | 75-441 | LG 334 |
| 954-0234 | 75-441 | LG 334 |
| 954-0240 | 75-009 | LG 301 |
| **OLEO MAC** | | |
| 33.00203 | 49-021 | LG 629 |
| 33.00204 | 55-342 | LG 627 |
| 350.00152 | 49-021 | LG 629 |
| 350.00168 | 55-343 | LG 627 |
| 950.00139 | 55-342 | LG 627 |
| 950.0016 | 49-835 | LG 611 |
| 950.00160 | 49-835 | LG 611 |
| 950.00161 | 49-835 | LG 611 |
| **OMC** | | |
| 474627 | 49-834 | LG 611 |
| 475152 | 49-812 | LG 612 |
| 580148 | 33-601 | LG 789 |
| **ONAN** | | |
| 122-0185 | 83-300 | LG 819 |
| 122-0406 | 83-283 | LG 818 |
| 122-0406 | 83-403 | LG 818 |
| 122-0469 | 83-028 | LG 817 |
| 122-0645 | 83-283 | LG 818 |
| 122-0645 | 83-403 | LG 818 |
| 122-0737 | 69-282 | LG 817 |
| 122-0737 | 83-282 | LG 817 |
| 122-0737 | 83-402 | LG 817 |
| 122-645 | 83-283 | LG 818 |
| 122-645 | 83-403 | LG 818 |
| 140-1188 | 30-082 | LG 205 |
| 140-1216 | 30-093 | LG 206 |
| 140-1216 | 30-812 | LG 206 |
| 140-1228 | 30-430 | LG 211 |
| 140-1228 | 30-630 | LG 197 |
| 140-1228 | 30-846 | LG 211 |
| 140-1496 | 30-953 | LG 211 |
| 140-1891 | 30-432 | |
| 140-2522 | 30-430 | LG 211 |
| 140-2522 | 30-846 | LG 211 |
| 140-2628 | 30-430 | LG 211 |
| 140-2628 | 30-846 | LG 211 |
| 140-2628-01 | 30-430 | LG 211 |
| 146-0180 | 49-201 | LG 608 |
| 149-2206 | 07-103 | LG 775 |
| 149-2206-01 | 07-103 | LG 775 |
| 191-0933 | 33-720 | LG 920 |
| 191-1567 | 33-721 | LG 920 |
| 191-1642-04 | 33-732 | LG 920 |
| 1911748 | 33-411 | LG 732 |
| 191-1748 | 33-411 | LG 732 |
| 191-1804-04 | 33-732 | LG 920 |
| 191-1808-04 | 33-732 | LG 920 |
| 191-1808-06 | 33-732 | LG 920 |
| 191-1949-04 | 33-732 | LG 920 |
| 191-1949-06 | 33-732 | LG 920 |
| 191-1949-07 | 33-732 | LG 920 |
| 191-1949-08 | 33-732 | LG 920 |
| 1912106 | 33-411 | LG 732 |
| 191-2106 | 33-411 | LG 732 |
| 1912208 | 33-411 | LG 732 |
| 191-2208 | 33-411 | LG 732 |
| 191-2227 | 33-411 | LG 732 |
| 1912277 | 33-411 | LG 732 |
| 191-2277 | 33-411 | LG 732 |
| 378-0385 | 33-389 | LG 945 |
| **ORGILL BROS.** | | |
| 754-0266 | 75-016 | LG 301 |
| 954-0266 | 75-016 | LG 301 |
| 954-0266A | 75-016 | LG 301 |

| OEM No. | OREGON | Page |
|---|---|---|
| **OUR OWN HARDWARE** | | |
| 754-0145 | 75-145 | LG 300 |
| 754-0151 | 75-004 | LG 301 |
| 754-0178 | 75-179 | LG 310 |
| 754-0201 | 75-441 | LG 334 |
| 754-0230 | 75-008 | LG 301 |
| 754-0234 | 75-441 | LG 334 |
| 754-0240 | 75-009 | LG 301 |
| 754-0241 | 75-012 | LG 301 |
| 754-0266 | 75-016 | LG 301 |
| 754-0293 | 75-018 | LG 301 |
| 754-0935 | 75-092 | LG 304 |
| 954-0145 | 75-145 | LG 300 |
| 954-0145A | 75-145 | LG 300 |
| 954-0151 | 75-004 | LG 301 |
| 954-015A | 75-145 | LG 300 |
| 954-0178 | 75-179 | LG 310 |
| 954-0201 | 75-441 | LG 334 |
| 954-0230 | 75-008 | LG 301 |
| 954-0234 | 75-441 | LG 334 |
| 954-0240 | 75-009 | LG 301 |
| 954-0241 | 75-012 | LG 301 |
| 954-0241A | 75-012 | LG 301 |
| 954-0266 | 75-016 | LG 301 |
| 954-0266A | 75-016 | LG 301 |
| 954-0293 | 75-018 | LG 301 |
| 954-0935 | 75-092 | LG 304 |
| **PARKER** | | |
| TE0230US250AA | 27-503 | LG 724 |
| TF0240LS080AAFB | 27-502 | LG 725 |
| **PARKWAY SUPPLY CO.** | | |
| 754-0151 | 75-004 | LG 301 |
| 754-0935 | 75-092 | LG 304 |
| 954-0151 | 75-004 | LG 301 |
| **PARTNER** | | |
| 506 03 30-31 | 75-711 | LG 310 |
| 506 07 05-03 | 75-724 | LG 310 |
| 506 07 05-06 | 75-713 | LG 310 |
| 506 22 42-01 | 30-066 | |
| 506 22 42-1 | 30-066 | |
| 506 22 42-1 | 30-836 | LG 680 |
| 506 29 67-02 | 75-712 | LG 310 |
| 506033031 | 75-711 | LG 310 |
| 506070503 | 75-724 | LG 310 |
| 506070504 | 15-661 | LG 310 |
| 506070506 | 75-713 | LG 310 |
| 506070507 | 15-662 | LG 310 |
| 506224201 | 30-066 | |
| 506-23-15-02 | 30-149 | LG 211 |
| 506231801 | 30-149 | LG 211 |
| 506231802 | 30-149 | LG 211 |
| 506-23-18-02 | 30-149 | LG 211 |
| 506-23-18F | 30-149 | LG 211 |
| 506276741 | 75-711 | LG 310 |
| 506296702 | 75-712 | LG 310 |
| 506372706 | 75-713 | LG 310 |
| 531031497 | 30-066 | |
| 544908402 | 75-712 | LG 310 |
| **PENNEY'S** | | |
| 1060 | 75-120 | LG 300 |
| 1089 | 75-120 | LG 300 |
| 21615 | 75-111 | LG 306 |
| 21649 | 75-112 | LG 306 |
| 23749 | 75-022 | LG 307 |
| 754-0145 | 75-145 | LG 300 |
| 754-0151 | 75-004 | LG 301 |
| 754-0178 | 75-179 | LG 310 |
| 754-0194 | 75-090 | LG 301 |
| 754-0201 | 75-441 | LG 334 |
| 754-0230 | 75-008 | LG 301 |
| 754-0234 | 75-441 | LG 334 |

| OEM No. | OREGON | Page |
|---|---|---|
| 754-0266 | 75-016 | LG 301 |
| 754-0935 | 75-092 | LG 304 |
| 954-0145 | 75-145 | LG 300 |
| 954-0145A | 75-145 | LG 300 |
| 954-0151 | 75-004 | LG 301 |
| 954-015A | 75-145 | LG 300 |
| 954-0178 | 75-179 | LG 310 |
| 954-0194 | 75-090 | LG 301 |
| 954-0201 | 75-441 | LG 334 |
| 954-0230 | 75-008 | LG 301 |
| 954-0234 | 75-441 | LG 334 |
| 954-0266 | 75-016 | LG 301 |
| 954-0266A | 75-016 | LG 301 |
| 954-0935 | 75-092 | LG 304 |
| **PEP BOYS** | | |
| 754-0935 | 75-092 | LG 304 |
| **PHELON** | | |
| 06230 | 33-606 | LG 789 |
| 06240-00-F | 33-363 | LG 787 |
| 071130 | 33-008 | LG 789 |
| 07130 | 33-008 | LG 789 |
| 6230 | 33-606 | LG 789 |
| 71130 | 33-008 | LG 789 |
| 7130 | 33-008 | LG 789 |
| FG06225 | 33-008 | LG 789 |
| FG1316 | 33-008 | LG 789 |
| FG-6240 | 33-363 | LG 787 |
| **PHOENIX** | | |
| F3008 | 34-001 | LG 821 |
| F3011 | 34-002 | LG 821 |
| F3616 | 34-006 | LG 821 |
| F4414 | 34-009 | LG 821 |
| F4812 | 34-012 | LG 821 |
| F5212 | 34-015 | LG 821 |
| F5216 | 34-017 | LG 821 |
| F6412 | 34-019 | LG 821 |
| F6416 | 34-020 | LG 821 |
| FI275-075 | 34-024 | LG 822 |
| FI325-075 | 78-034 | LG 822 |
| FI400-075 | 34-024 | LG 822 |
| FI400-100 | 78-037 | LG 822 |
| PI275-150 | 34-028 | LG 821 |
| S810 | 34-810 | LG 725 |
| V39AB | 34-030 | LG 821 |
| V40AO | 34-031 | LG 821 |
| V48A | 34-034 | LG 821 |
| V64B | 34-038 | LG 821 |
| VI375-063 | 34-043 | LG 823 |
| VI400-063 | 78-040 | LG 823 |
| VI450-063 | 78-000 | LG 823 |
| W1375-1-0 | 78-101 | LG 249 |
| W1375-1-2 | 78-103 | LG 823 |
| W1500-1-0 | 78-100 | LG 249 |
| W1500-1-2 | 78-102 | LG 823 |
| **PIX** | | |
| P-00030779 | 15-581 | LG 273 |
| P-01005378 | 15-583 | LG 273 |
| P-041-0219-00 | 15-232 | LG 266 |
| P-041-0236-00 | 15-233 | LG 266 |
| P-041-1420-00 | 15-234 | LG 267 |
| P-041-1470-00 | 15-235 | LG 267 |
| P-041-1490-00 | 15-236 | LG 267 |
| P-041-1560-00 | 15-237 | LG 267 |
| P-041-1890-00 | 15-238 | LG 267 |
| P-041-2375-00 | 15-239 | LG 267 |
| P-041-2525-00 | 15-240 | LG 267 |
| P-041-5048-00 | 15-241 | LG 267 |
| P-041-5200-00 | 15-242 | LG 267 |
| P-041-6027-00 | 15-243 | LG 267 |
| P-041-6400-00 | 15-244 | LG 267 |
| P-049028 | 15-151 | LG 285 |

| OEM No. | OREGON | Page |
|---|---|---|
| P-07200026 | 15-152 | LG 264 |
| P-07200027 | 15-153 | LG 286 |
| P-07200028 | 15-154 | LG 286 |
| P-07200030 | 15-155 | LG 264 |
| P-07200032 | 15-156 | LG 286 |
| P-07200039 | 15-157 | LG 286 |
| P-07200116 | 15-158 | LG 286 |
| P-07200433 | 15-159 | LG 286 |
| P-07200435 | 15-160 | LG 253 |
| P-07200504 | 15-566 | LG 299 |
| P-07225500 | 15-567 | LG 299 |
| P-07234600 | 15-164 | LG 286 |
| P-07234900 | 15-165 | LG 286 |
| P-07235100 | 15-167 | LG 286 |
| P-07239200 | 15-169 | LG 266 |
| P-07239300 | 15-170 | LG 266 |
| P-07239400 | 15-171 | LG 286 |
| P-07240700 | 15-173 | LG 287 |
| P-07241300 | 15-174 | LG 287 |
| P-07242000 | 15-179 | LG 287 |
| P-07242300 | 15-180 | LG 287 |
| P-07242800 | 15-181 | LG 266 |
| P-07243600 | 15-568 | LG 299 |
| P-100023 | 15-951 | LG 297 |
| P-100024 | 15-952 | LG 297 |
| P-101141 | 15-954 | LG 297 |
| P-101228 | 15-955 | LG 297 |
| P-1016203 | 15-321 | LG 272 |
| P-101736 | 15-956 | LG 297 |
| P-101916701 | 15-322 | LG 272 |
| P-101996 | 15-957 | LG 297 |
| P-102549 | 15-958 | LG 297 |
| P-102655X | 15-688 | LG 315 |
| P-102742 | 15-788 | LG 320 |
| P-1035598 | 15-398 | LG 282 |
| P-1036906 | 15-399 | LG 282 |
| P-1046397 | 15-789 | LG 320 |
| P-1046398 | 15-790 | LG 320 |
| P-1048152 | 15-791 | LG 320 |
| P-106125 | 15-792 | LG 320 |
| P-106339 | 15-959 | LG 297 |
| P-10676 | 15-847 | LG 325 |
| P-106863X | 15-691 | LG 260 |
| P-10859 | 15-848 | LG 325 |
| P-10864 | 15-849 | LG 325 |
| P-1106774 | 15-794 | LG 320 |
| P-1106892 | 15-795 | LG 320 |
| P-111924X | 15-693 | LG 311 |
| P-11305 | 15-369 | LG 278 |
| P-114202 | 15-797 | LG 320 |
| P-11466 | 15-850 | LG 325 |
| P-1185651 | 15-829 | LG 324 |
| P-12033 | 15-370 | LG 278 |
| P-12172 | 15-371 | LG 278 |
| P-124279 | 15-372 | LG 278 |
| P-124293X | 15-695 | LG 260 |
| P-128110 | 15-269 | LG 270 |
| P-1300A | 15-373 | LG 278 |
| P-1323735 | 15-401 | LG 279 |
| P-13453 | 15-851 | LG 325 |
| P-141416 | 15-700 | LG 259 |
| P-14153G1 | 15-428 | LG 283 |
| P-14398 | 15-739 | LG 316 |
| P-1469 | 15-852 | LG 325 |
| P-14799 | 15-740 | LG 316 |
| P-14800 | 15-741 | LG 317 |
| P-14911-97010 | 15-516 | LG 298 |
| P-15184 | 15-853 | LG 325 |
| P-1520873 | 15-434 | LG 283 |
| P-15415A | 15-854 | LG 325 |
| P-15481-97010 | 15-517 | LG 298 |
| P-15624 | 15-855 | LG 258 |
| P-1594 | 15-798 | LG 320 |
| P-16099 | 15-945 | LG 325 |
| P-16548G1 | 15-429 | LG 283 |

X

* OREGON® Gator™ replacement blade

# 2019 OEM X-Reference

| OEM No. | OREGON | Page |
|---|---|---|
| **PIX** | | |
| P-165555 | 15-704 | LG 311 |
| P-165631 | 15-705 | LG 315 |
| P-1657044 | 15-724 | LG 316 |
| P-1670835 | 15-729 | LG 316 |
| P-167133 | 15-512 | LG 298 |
| P-167148 | 15-513 | LG 298 |
| P-167149 | 15-514 | LG 298 |
| P-167163 | 15-515 | LG 298 |
| P-1684 | 15-374 | LG 278 |
| P-169178 | 15-708 | LG 312 |
| P-169778 | 15-223 | LG 259 |
| P-170140 | 15-711 | LG 259 |
| P-1703466 | 15-731 | LG 316 |
| P-1703836 | 15-732 | LG 316 |
| P-17053 | 15-742 | LG 317 |
| P-1714 | 15-375 | LG 278 |
| P-1716854 | 15-733 | LG 316 |
| P-1718017 | 15-734 | LG 316 |
| P-1722039 | 15-735 | LG 316 |
| P-1744706 | 15-833 | LG 324 |
| P-1755565 | 15-836 | LG 324 |
| P-1764007 | 15-837 | LG 324 |
| P-1764009 | 15-838 | LG 324 |
| P-179092 | 15-712 | LG 260 |
| P-18186 | 15-856 | LG 325 |
| P-182212 | 15-224 | LG 260 |
| P-1830258 | 15-839 | LG 324 |
| P-183688 | 15-225 | LG 260 |
| P-18440 | 15-858 | LG 325 |
| P-185476 | 15-226 | LG 260 |
| P-1860 | 15-376 | LG 278 |
| P-18990 | 15-860 | LG 325 |
| P-194346 | 15-227 | LG 260 |
| P-196853 | 15-228 | LG 260 |
| P-20256 | 15-366 | LG 277 |
| P-203590 | 15-331 | LG 272 |
| P-203591 | 15-333 | LG 272 |
| P-203593 | 15-335 | LG 272 |
| P-203594 | 15-337 | LG 272 |
| P-203597 | 15-339 | LG 272 |
| P-205505 | 15-961 | LG 297 |
| P-205513 | 15-962 | LG 297 |
| P-205514 | 15-963 | LG 297 |
| P-20644 | 15-861 | LG 325 |
| P-20824 | 15-435 | LG 283 |
| P-21063 | 15-436 | LG 283 |
| P-210890 | 15-799 | LG 320 |
| P-21261 | 15-437 | LG 283 |
| P-21510W | 15-863 | LG 326 |
| P-21684 | 15-438 | LG 283 |
| P-2188128 | 15-247 | LG 268 |
| P-22062 | 15-440 | LG 283 |
| P-23033 | 15-864 | LG 326 |
| P-2308052 | 15-248 | LG 268 |
| P-23416 | 15-744 | LG 317 |
| P-23560 | 15-865 | LG 326 |
| P-23933 | 15-867 | LG 326 |
| P-23943 | 15-868 | LG 326 |
| P-23990 | 15-869 | LG 326 |
| P-24102 | 15-870 | LG 326 |
| P-24304 | 15-630 | LG 306 |
| P-24497 | 15-746 | LG 317 |
| P-24618 | 15-748 | LG 317 |
| P-2474A | 15-871 | LG 326 |
| P-26305 | 15-749 | LG 317 |
| P-26354 | 15-872 | LG 326 |
| P-26414G01 | 15-430 | LG 283 |
| P-26840W | 15-873 | LG 326 |
| P-27077G02 | 15-431 | LG 283 |
| P-2720815 | 15-249 | LG 268 |
| P-2720948 | 15-250 | LG 268 |
| P-27346 | 15-750 | LG 317 |
| P-27347 | 15-751 | LG 317 |
| P-27652 | 15-874 | LG 326 |
| P-27875 | 15-875 | LG 326 |
| P-27920 | 15-938 | LG 326 |
| P-28167 | 15-876 | LG 326 |
| P-28334 | 15-753 | LG 317 |
| P-28975 | 15-877 | LG 326 |
| P-29010 | 15-878 | LG 327 |
| P-29101 | 15-756 | LG 317 |
| P-29229 | 15-879 | LG 327 |
| P-29519 | 15-881 | LG 327 |
| P-29523 | 15-882 | LG 327 |
| P-29641 | 15-760 | LG 317 |
| P-29907 | 15-761 | LG 317 |
| P-300575 | 15-649 | LG 309 |
| P-302289 | 15-650 | LG 259 |
| P-303241 | 15-651 | LG 259 |
| P-30435 | 15-883 | LG 327 |
| P-305148 | 15-652 | LG 259 |
| P-308701 | 15-653 | LG 310 |
| P-31615 | 15-884 | LG 327 |
| P-31666 | 15-885 | LG 327 |
| P-31720 | 15-886 | LG 327 |
| P-31748 | 15-887 | LG 327 |
| P-3211077 | 15-663 | LG 310 |
| P-323344 | 15-404 | LG 279 |
| P-323734 | 15-405 | LG 279 |
| P-32650 | 15-888 | LG 327 |
| P-32855 | 15-889 | LG 327 |
| P-32906 | 15-890 | LG 327 |
| P-32970 | 15-891 | LG 327 |
| P-33050 | 15-892 | LG 327 |
| P-33056 | 15-893 | LG 328 |
| P-33105 | 15-894 | LG 328 |
| P-33125 | 15-654 | LG 309 |
| P-33710 | 15-895 | LG 328 |
| P-34517 | 15-896 | LG 328 |
| P-3492 | 15-897 | LG 328 |
| P-35162 | 15-898 | LG 328 |
| P-35252 | 15-899 | LG 328 |
| P-3526 | 15-655 | LG 309 |
| P-35433 | 15-900 | LG 328 |
| P-3546 | 15-901 | LG 328 |
| P-35543 | 15-902 | LG 328 |
| P-35583 | 15-947 | LG 328 |
| P-35710 | 15-762 | LG 317 |
| P-36365 | 15-903 | LG 328 |
| P-36371 | 15-904 | LG 328 |
| P-36496 | 15-905 | LG 328 |
| P-3652 | 15-906 | LG 328 |
| P-36585 | 15-763 | LG 318 |
| P-37051 | 15-907 | LG 329 |
| P-37x35 | 15-634 | LG 307 |
| P-37X73 | 15-638 | LG 308 |
| P-37X81 | 15-641 | LG 308 |
| P-37X83 | 15-642 | LG 308 |
| P-37X90 | 15-643 | LG 308 |
| P-37X97 | 15-644 | LG 308 |
| P-38136 | 15-253 | LG 267 |
| P-381904 | 15-443 | LG 284 |
| P-382025 | 15-444 | LG 284 |
| P-382037 | 15-445 | LG 284 |
| P-382049 | 15-446 | LG 284 |
| P-38275 | 15-254 | LG 267 |
| P-382777 | 15-449 | LG 284 |
| P-382800 | 15-450 | LG 285 |
| P-382836 | 15-451 | LG 285 |
| P-38330 | 15-255 | LG 267 |
| P-38331 | 15-256 | LG 267 |
| P-38362 | 15-257 | LG 267 |
| P-38363 | 15-258 | LG 267 |
| P-38385 | 15-259 | LG 267 |
| P-38462 | 15-260 | LG 268 |
| P-38528 | 15-261 | LG 268 |
| P-3887 | 15-645 | LG 306 |
| P-401603 | 15-229 | LG 260 |
| P-403024 | 15-408 | LG 279 |
| P-403025 | 15-409 | LG 280 |
| P-403088 | 15-410 | LG 280 |
| P-403105 | 15-411 | LG 280 |
| P-408010 | 15-230 | LG 260 |
| P-41545 | 15-184 | LG 285 |
| P-41599 | 15-185 | LG 285 |
| P-419271 | 15-231 | LG 260 |
| P-423018 | 15-389 | LG 278 |
| P-42735 | 15-764 | LG 318 |
| P-42813 | 15-765 | LG 318 |
| P-43844 | 15-766 | LG 318 |
| P-44637 | 15-767 | LG 318 |
| P-448990 | 15-800 | LG 320 |
| P-45186 | 15-657 | LG 259 |
| P-471410 | 15-801 | LG 321 |
| P-48019 | 15-262 | LG 268 |
| P-48084 | 15-674 | LG 312 |
| P-481498 | 15-677 | LG 313 |
| P-481499 | 15-678 | LG 313 |
| P-481980 | 15-679 | LG 313 |
| P-48207 | 15-680 | LG 312 |
| P-482137 | 15-681 | LG 313 |
| P-48238A | 15-264 | LG 268 |
| P-48280A | 15-265 | LG 268 |
| P-483053 | 15-390 | LG 278 |
| P-48376 | 15-266 | LG 268 |
| P-48553 | 15-682 | LG 313 |
| P-48607 | 15-683 | LG 313 |
| P-48854 | 15-684 | LG 313 |
| P-49029 | 15-220 | LG 285 |
| P-4927 | 15-943 | LG 329 |
| P-49270 | 15-187 | LG 285 |
| P-49878 | 15-659 | LG 309 |
| P-50020136 | 15-295 | LG 271 |
| P-5023256 | 15-768 | LG 318 |
| P-506033033 | 15-477 | LG 288 |
| P-506070504 | 15-661 | LG 310 |
| P-506070507 | 15-662 | LG 310 |
| P-5082 | 15-908 | LG 329 |
| P-51213 | 15-188 | LG 285 |
| P-51344 | 15-911 | LG 329 |
| P-514291 | 15-802 | LG 321 |
| P-515382M1 | 15-578 | LG 300 |
| P-515383M1 | 15-579 | LG 300 |
| P-523175 | 15-412 | LG 280 |
| P-523349 | 15-394 | LG 278 |
| P-523366 | 15-395 | LG 278 |
| P-53418 | 15-913 | LG 329 |
| P-539110411 | 15-472 | LG 259 |
| P-539110832 | 15-473 | LG 288 |
| P-539112529 | 15-474 | LG 288 |
| P-539660 | 15-803 | LG 321 |
| P-543028 | 15-413 | LG 280 |
| P-543523 | 15-415 | LG 280 |
| P-543548 | 15-416 | LG 280 |
| P-543749 | 15-417 | LG 280 |
| P-557660 | 15-804 | LG 321 |
| P-570240 | 15-805 | LG 321 |
| P-5711 | 15-914 | LG 329 |
| P-57556 | 15-660 | LG 309 |
| P-581264 | 15-646 | LG 306 |
| P-585436 | 15-647 | LG 306 |
| P-5959 | 15-577 | LG 300 |
| P-603193 | 15-418 | LG 280 |
| P-603295 | 15-419 | LG 280 |
| P-603576 | 15-420 | LG 280 |
| P-603582 | 15-421 | LG 280 |
| P-6111 | 15-386 | LG 278 |
| P-6231 | 15-842 | LG 325 |
| P-62421-62310 | 15-519 | LG 298 |
| P-62465 | 15-769 | LG 318 |
| P-62828 | 15-715 | LG 315 |
| P-633162 | 15-424 | LG 280 |
| P-633853 | 15-425 | LG 280 |
| P-653332 | 15-426 | LG 280 |
| P-653333 | 15-427 | LG 282 |
| P-65482 | 15-296 | LG 270 |
| P-66101-25080 | 15-522 | LG 298 |
| P-66474 | 15-297 | LG 270 |
| P-66503 | 15-916 | LG 329 |
| P-66552 | 15-299 | LG 271 |
| P-671390 | 15-807 | LG 321 |
| P-68093 | 15-570 | LG 299 |
| P-6814 | 15-918 | LG 329 |
| P-696220 | 15-809 | LG 321 |
| P-70003 | 15-920 | LG 329 |
| P-700151 | 15-571 | LG 299 |
| P-70050-94495 | 15-525 | LG 298 |
| P-70050-94497 | 15-526 | LG 298 |
| P-70102 | 15-921 | LG 329 |
| P-70132 | 15-922 | LG 329 |
| P-70197 | 15-939 | LG 329 |
| P-702553 | 15-559 | LG 299 |
| P-70341 | 15-940 | LG 329 |
| P-705010 | 15-572 | LG 299 |
| P-705361 | 15-561 | LG 299 |
| P-705375 | 15-573 | LG 299 |
| P-705376 | 15-574 | LG 299 |
| P-705377 | 15-575 | LG 299 |
| P-705378 | 15-576 | LG 299 |
| P-70580 | 15-923 | LG 330 |
| P-70581 | 15-924 | LG 330 |
| P-70713-34770 | 15-529 | LG 298 |
| P-70983 | 15-926 | LG 330 |
| P-7102 | 15-580 | LG 300 |
| P-710532 | 15-685 | LG 315 |
| P-710533 | 15-686 | LG 315 |
| P-71429 | 15-928 | LG 330 |
| P-71460012 | 15-948 | LG 253 |
| P-71460013 | 15-949 | LG 255 |
| P-71506 | 15-929 | LG 330 |
| P-71526 | 15-930 | LG 330 |
| P-71579 | 15-931 | LG 330 |
| P-71616 | 15-932 | LG 330 |
| P-71838 | 15-933 | LG 330 |
| P-71879 | 15-934 | LG 330 |
| P-72023 | 15-221 | LG 265 |
| P-72052 | 15-190 | LG 265 |
| P-72054G01 | 15-432 | LG 283 |
| P-72081 | 15-192 | LG 265 |
| P-72098 | 15-193 | LG 266 |
| P-72130 | 15-194 | LG 265 |
| P-72131 | 15-195 | LG 265 |
| P-72231 | 15-200 | LG 285 |
| P-72238 | 15-201 | LG 285 |
| P-72242 | 15-202 | LG 285 |
| P-72250 | 15-203 | LG 286 |
| P-72258 | 15-222 | LG 285 |
| P-72260 | 15-205 | LG 266 |
| P-7230 | 15-843 | LG 325 |
| P-7234 | 15-844 | LG 325 |
| P-72345 | 15-208 | LG 266 |
| P-7235 | 15-845 | LG 325 |
| P-7235500 | 15-210 | LG 266 |
| P-72363 | 15-211 | LG 266 |
| P-72382 | 15-213 | LG 286 |
| P-7241500 | 15-215 | LG 287 |
| P-7241700 | 15-216 | LG 266 |
| P-7241800 | 15-217 | LG 287 |
| P-72818 | 15-935 | LG 330 |
| P-73263 | 15-936 | LG 330 |
| P-741330 | 15-810 | LG 321 |
| P-74977 | 15-716 | LG 315 |
| P-760928 | 15-648 | LG 306 |
| P-76505-34710 | 15-535 | LG 298 |
| P-76516-61510 | 15-536 | LG 298 |
| P-76529-34710 | 15-538 | LG 298 |
| P-76539-34710 | 15-539 | LG 298 |
| P-76553-34710 | 15-541 | LG 298 |
| P-7725 | 15-388 | LG 278 |

X



* OREGON® Gator™ replacement blade

| OEM No. | OREGON | Page |
|---|---|---|
| **PIX** | | |
| P-78030N | 15-267 | LG 268 |
| P-78031N | 15-268 | LG 268 |
| P-79181 | 15-771 | LG 318 |
| P-79776 | 15-773 | LG 318 |
| P-79779 | 15-774 | LG 318 |
| P-79781 | 15-776 | LG 318 |
| P-822390 | 15-812 | LG 321 |
| P-824110 | 15-813 | LG 321 |
| P-826420 | 15-814 | LG 321 |
| P-83101670 | 15-553 | LG 299 |
| P-83120 | 15-313 | LG 271 |
| P-83121 | 15-314 | LG 271 |
| P-83136 | 15-315 | LG 271 |
| P-8411 | 15-815 | LG 321 |
| P-84302 | 15-317 | LG 271 |
| P-84303 | 15-318 | LG 271 |
| P-850053 | 15-717 | LG 260 |
| P-86326 | 15-316 | LG 271 |
| P-88074 | 15-718 | LG 259 |
| P-90880 | 15-302 | LG 271 |
| P-9180R | 15-719 | LG 312 |
| P-9240 | 15-218 | LG 285 |
| P-925588 | 15-820 | LG 321 |
| P-933884 | 15-821 | LG 321 |
| P-93991 | 15-303 | LG 271 |
| P-94144 | 15-304 | LG 271 |
| P-94897 | 15-305 | LG 271 |
| P-94898 | 15-306 | LG 271 |
| P-94899 | 15-307 | LG 271 |
| P-94900 | 15-308 | LG 271 |
| P-94900007850 | 15-780 | LG 320 |
| P-94900007851 | 15-781 | LG 320 |
| P-94900007891 | 15-782 | LG 320 |
| P-94900007900A | 15-783 | LG 320 |
| P-94900007901A | 15-784 | LG 320 |
| P-94900007915 | 15-785 | LG 320 |
| P-94900007920 | 15-786 | LG 320 |
| P-9540125 | 15-589 | LG 273 |
| P-9540142 | 15-590 | LG 300 |
| P-9540181 | 15-593 | LG 301 |
| P-9540190 | 15-594 | LG 274 |
| P-9540218 | 15-595 | LG 274 |
| P-9540264 | 15-598 | LG 301 |
| P-9540325 | 15-601 | LG 274 |
| P-95404003A | 15-602 | LG 304 |
| P-95404013 | 15-603 | LG 304 |
| P-95404014 | 15-604 | LG 275 |
| P-95404047 | 15-605 | LG 275 |
| P-95404055 | 15-606 | LG 275 |
| P-95404100 | 15-609 | LG 305 |
| P-95404207 | 15-613 | LG 305 |
| P-9540438 | 15-616 | LG 303 |
| P-9540483 | 15-619 | LG 274 |
| P-9540641 | 15-623 | LG 274 |
| P-9543001 | 15-588 | LG 275 |
| P-9543004 | 15-625 | LG 275 |
| P-9543045 | 15-627 | LG 275 |
| P-9543048 | 15-628 | LG 275 |
| P-9543053 | 15-629 | LG 304 |
| P-96814 | 15-309 | LG 271 |
| P-97315 | 15-310 | LG 271 |
| P-97346C158 | 15-367 | LG 277 |
| P-983764 | 15-824 | LG 321 |
| P-983780 | 15-825 | LG 321 |
| P-9907B130 | 15-368 | LG 277 |
| P-993904 | 15-826 | LG 321 |
| P-994627 | 15-827 | LG 322 |
| P-994647 | 15-828 | LG 322 |
| P-AM102190 | 15-511 | LG 292 |
| P-C23359 | 15-320 | LG 272 |
| P-D18004 | 15-452 | LG 287 |
| P-D18005 | 15-453 | LG 287 |
| P-D18006 | 15-454 | LG 287 |
| P-D18007 | 15-455 | LG 287 |
| P-D18087 | 15-457 | LG 287 |
| P-D18088 | 15-458 | LG 287 |
| P-D18361 | 15-459 | LG 288 |
| P-D28030 | 15-460 | LG 288 |
| P-D28031 | 15-461 | LG 288 |
| P-D28125 | 15-462 | LG 288 |
| P-D28241 | 15-463 | LG 288 |
| P-D3389 | 15-350 | LG 272 |
| P-D3644 | 15-351 | LG 272 |
| P-D3645 | 15-352 | LG 272 |
| P-D3664 | 15-353 | LG 272 |
| P-D3671 | 15-354 | LG 272 |
| P-D3724 | 15-355 | LG 272 |
| P-D3727W | 15-356 | LG 272 |
| P-D3728 | 15-357 | LG 272 |
| P-D3733 | 15-358 | LG 272 |
| P-D3754 | 15-359 | LG 272 |
| P-D3764W | 15-360 | LG 272 |
| P-D3769 | 15-361 | LG 272 |
| P-D3777W | 15-363 | LG 272 |
| P-D3778 | 15-364 | LG 272 |
| P-GDU10025 | 15-464 | LG 288 |
| P-GDU10228 | 15-465 | LG 288 |
| P-GY20572 | 15-483 | LG 293 |
| P-K5645-34710 | 15-544 | LG 298 |
| P-K5651-34710 | 15-545 | LG 298 |
| P-K5651-34711 | 15-546 | LG 298 |
| P-K5671-34710 | 15-547 | LG 298 |
| P-K5677-34710 | 15-548 | LG 298 |
| P-K5700-34710 | 15-549 | LG 299 |
| P-K5763-34710 | 15-550 | LG 299 |
| P-M117608 | 15-485 | LG 293 |
| P-M119872 | 15-486 | LG 293 |
| P-M125383 | 15-487 | LG 293 |
| P-M136927 | 15-488 | LG 293 |
| P-M141627 | 15-490 | LG 294 |
| P-M142997 | 15-491 | LG 294 |
| P-M143888 | 15-492 | LG 294 |
| P-M147278 | 15-493 | LG 294 |
| P-M148556 | 15-494 | LG 294 |
| P-M154295 | 15-497 | LG 294 |
| P-M154960 | 15-498 | LG 294 |
| P-M155343 | 15-499 | LG 294 |
| P-M155368 | 15-500 | LG 294 |
| P-M44121 | 15-501 | LG 294 |
| P-PL1443 | 15-270 | LG 270 |
| P-PL4511 | 15-271 | LG 270 |
| P-PL4513 | 15-272 | LG 270 |
| P-PL4732 | 15-274 | LG 270 |
| P-PL4733 | 15-275 | LG 270 |
| P-PL4734 | 15-276 | LG 270 |
| P-PL4739 | 15-277 | LG 270 |
| P-PL4740 | 15-278 | LG 270 |
| P-PL4811 | 15-279 | LG 270 |
| P-PL4813 | 15-280 | LG 270 |
| P-PL5039 | 15-281 | LG 270 |
| P-PL6011 | 15-282 | LG 270 |
| P-PL6062 | 15-283 | LG 270 |
| P-PL7332 | 15-286 | LG 270 |
| P-PL7436 | 15-287 | LG 270 |
| P-PL8519 | 15-288 | LG 270 |
| P-PLO543 | 15-289 | LG 269 |
| P-PLO648 | 15-290 | LG 269 |
| P-PLO661 | 15-291 | LG 269 |
| P-PLO848 | 15-292 | LG 270 |
| P-PLO861 | 15-293 | LG 270 |
| P-PM221 | 15-294 | LG 270 |
| P-PP12001 | 15-664 | LG 311 |
| P-PP12002 | 15-665 | LG 311 |
| P-PP12012 | 15-667 | LG 311 |
| P-PP13006 | 15-668 | LG 311 |
| P-PP13007 | 15-669 | LG 311 |
| P-PP13008 | 15-670 | LG 311 |
| P-PP13010 | 15-672 | LG 311 |
| P-PP13011 | 15-673 | LG 311 |
| P-SM31150 | 15-737 | LG 316 |
| P-TCU16092 | 15-507 | LG 296 |
| P-TCU16841 | 15-508 | LG 296 |
| P-TCU18847 | 15-466 | LG 288 |
| P-TCU18849 | 15-467 | LG 288 |
| **POULAN** | | |
| 141114 | 195-021 | LG 468 |
| 141114 | 595-602* | LG 403 |
| 141114 | 95-602* | LG 403 |
| 15385 | 56-004 | LG 686 |
| 187254 | 195-072 | LG 530 |
| 187254 | 595-605* | LG 422 |
| 187254 | 95-605* | LG 463 |
| 187255 | 595-605* | LG 422 |
| 187255 | 95-082 | LG 372 |
| 187255 | 95-605* | LG 463 |
| 19156 | 49-017 | LG 760 |
| 204340218 | 595-024* | LG 465 |
| 204340218 | 95-044 | LG 465 |
| 20913 | 55-226 | LG 212 |
| 23064 | 56-004 | LG 686 |
| 23364 | 07-201 | LG 779 |
| 23369 | 55-515 | LG 211 |
| 23369 | 55-612 | LG 211 |
| 23791 | 55-613 | LG 211 |
| 24548 | 55-226 | LG 212 |
| 34032 | 07-207 | LG 779 |
| 37793 | 55-515 | LG 211 |
| 505220913 | 55-226 | LG 212 |
| 507123791 | 55-613 | LG 211 |
| 507-432582 | 55-342 | LG 627 |
| 520-023369 | 55-612 | LG 211 |
| 521981601 | 596-900* | LG 380 |
| 521981601 | 96-900* | LG 526 |
| 530010897 | 07-066 | LG 778 |
| 530-010897 | 07-066 | LG 778 |
| 530014362 | 07-066 | LG 778 |
| 530-014362 | 07-066 | LG 778 |
| 530014815 | 07-066 | LG 778 |
| 530-014815 | 07-066 | LG 778 |
| 530015385 | 56-004 | LG 686 |
| 530019156 | 49-017 | LG 760 |
| 530023064 | 56-004 | LG 686 |
| 530023364 | 07-066 | LG 778 |
| 530023364 | 07-201 | LG 779 |
| 530-023364 | 07-066 | LG 778 |
| 530-023364 | 07-201 | LG 779 |
| 530023369 | 55-515 | LG 211 |
| 530023369 | 55-612 | LG 211 |
| 530-023369 | 55-515 | LG 211 |
| 530-023369 | 55-612 | LG 211 |
| 530023791 | 55-613 | LG 211 |
| 530-023791 | 55-613 | LG 211 |
| 530024548 | 55-226 | LG 212 |
| 530-024548 | 55-226 | LG 212 |
| 530-024841 | 07-207 | LG 779 |
| 530-026048 | 55-822 | LG 1027 |
| 530034032 | 07-207 | LG 779 |
| 530035008 | 49-021 | LG 629 |
| 530035027 | 55-343 | LG 627 |
| 530035032 | 49-816 | LG 612 |
| 530035049 | 49-816 | LG 612 |
| 530035092 | 49-816 | LG 612 |
| 530035093 | 49-812 | LG 612 |
| 530035106 | 49-021 | LG 629 |
| 530035112 | 49-835 | LG 611 |
| 530035113 | 49-835 | LG 611 |
| 530035127 | 49-832 | LG 611 |
| 530-035128 | 49-806 | LG 611 |
| 530035144 | 49-816 | LG 612 |
| 530035145 | 49-812 | LG 612 |
| 530-035146 | 49-812 | LG 612 |
| 530035161 | 49-816 | LG 612 |
| 530035173 | 49-812 | LG 612 |
| 530035185 | 49-816 | LG 612 |
| 530035186 | 49-812 | LG 612 |
| 530035189 | 55-342 | LG 627 |
| 530035199 | 49-816 | LG 612 |
| 530035260 | 49-816 | LG 612 |
| 530-036575 | 30-964 | LG 212 |
| 530037793 | 55-515 | LG 211 |
| 530-037793 | 55-515 | LG 211 |
| 530038874 | 49-444 | LG 630 |
| 530-038874 | 49-444 | LG 630 |
| 530047004 | 07-066 | LG 778 |
| 530-047004 | 07-066 | LG 778 |
| 530-047213 | 49-443 | LG 630 |
| 530049383 | 30-965 | LG 212 |
| 530-049383 | 30-965 | LG 212 |
| 530071835 | 49-443 | LG 630 |
| 530-091481 | 07-206 | LG 776 |
| 530091878 | 07-207 | LG 779 |
| 530095643 | 07-066 | LG 778 |
| 530095646 | 07-066 | LG 778 |
| 530-095646 | 07-066 | LG 778 |
| 530095649 | 07-066 | LG 778 |
| 530-095649 | 07-066 | LG 778 |
| 530-19156 | 49-017 | LG 760 |
| 530-35008 | 49-021 | LG 629 |
| 530-35027 | 55-343 | LG 627 |
| 530-35032 | 49-816 | LG 612 |
| 530-35049 | 49-816 | LG 612 |
| 530-35092 | 49-816 | LG 612 |
| 530-35093 | 49-812 | LG 612 |
| 530-35106 | 49-021 | LG 629 |
| 530-35112 | 49-835 | LG 611 |
| 530-35127 | 49-832 | LG 611 |
| 530-35144 | 49-816 | LG 612 |
| 530-35145 | 49-812 | LG 612 |
| 530-35161 | 49-816 | LG 612 |
| 530-35173 | 49-812 | LG 612 |
| 530-35185 | 49-816 | LG 612 |
| 530-35186 | 49-812 | LG 612 |
| 530-35189 | 55-342 | LG 627 |
| 530-35199 | 49-816 | LG 612 |
| 530-35213 | 49-835 | LG 611 |
| 530-35260 | 49-816 | LG 612 |
| 530-37793 | 55-515 | LG 211 |
| 531301252 | 195-021 | LG 468 |
| 531301252 | 595-602* | LG 403 |
| 531301252 | 95-602* | LG 403 |
| 531307212 | 595-024* | LG 465 |
| 531307212 | 95-044 | LG 465 |
| 531307213 | 195-067 | LG 380 |
| 531307213 | 595-621* | LG 467 |
| 531307213 | 95-621* | LG 402 |
| 531307214 | 195-021 | LG 468 |
| 531307214 | 595-602* | LG 403 |
| 531307214 | 95-602* | LG 403 |
| 531307220 | 195-003 | LG 400 |
| 531307220 | 595-601* | LG 400 |
| 531307220 | 95-601* | LG 423 |
| 531307221 | 195-033 | LG 400 |
| 531307221 | 595-601* | LG 400 |
| 531307221 | 95-601* | LG 423 |
| 531307223 | 195-005 | LG 373 |
| 531307223 | 596-900* | LG 380 |
| 531307223 | 96-900* | LG 526 |
| 531307224 | 195-032 | LG 425 |
| 531307224 | 596-900* | LG 380 |
| 531307224 | 96-900* | LG 526 |
| 531307235 | 595-621* | LG 467 |
| 531307235 | 95-071 | LG 402 |
| 531307235 | 95-621* | LG 402 |
| 531307236 | 195-021 | LG 468 |
| 531307236 | 595-602* | LG 403 |
| 531307236 | 95-602* | LG 403 |
| 531307237 | 195-021 | LG 468 |
| 531307237 | 595-602* | LG 403 |

X

* OREGON® Gator™ replacement blade

# 2019 OEM X-Reference

| OEM No. | OREGON | Page |
|---|---|---|
| **POULAN** | | |
| 531307237 | 95-602* | LG 403 |
| 532106635 | 95-014 | LG 374 |
| 532106635 | 95-607* | LG 397 |
| 532-109081 | 33-331 | LG 730 |
| 532-109946X | 33-331 | LG 730 |
| 532121263 | 95-031 | LG 377 |
| 532-121687 | 82-678 | LG 904 |
| 532121798 | 95-027 | LG 398 |
| 532123791 | 55-613 | LG 211 |
| 532126338 | 95-034 | LG 377 |
| 532127841 | 595-613* | LG 463 |
| 532127841 | 95-036 | LG 463 |
| 532127841 | 95-613* | LG 463 |
| 532127842 | 195-033 | LG 400 |
| 532127842 | 595-601* | LG 400 |
| 532127842 | 95-601* | LG 423 |
| 532134148 | 195-003 | LG 400 |
| 532134148 | 595-601* | LG 400 |
| 532134148 | 95-601* | LG 423 |
| 532134149 | 195-005 | LG 373 |
| 532134149 | 596-900* | LG 380 |
| 532134149 | 96-900* | LG 526 |
| 532134768 | 195-021 | LG 468 |
| 532134768 | 595-602* | LG 403 |
| 532134768 | 95-602* | LG 403 |
| 532137380 | 595-609* | LG 461 |
| 532137380 | 95-018 | LG 399 |
| 532137380 | 95-609* | LG 376 |
| 532-138406 | 33-331 | LG 730 |
| 532138496 | 595-613* | LG 463 |
| 532138496 | 95-026 | LG 376 |
| 532138496 | 95-613* | LG 463 |
| 532138497 | 195-033 | LG 400 |
| 532138497 | 595-601* | LG 400 |
| 532138497 | 95-601* | LG 423 |
| 532138498 | 195-032 | LG 425 |
| 532138498 | 596-900* | LG 380 |
| 532138498 | 96-900* | LG 526 |
| 532138971 | 195-032 | LG 425 |
| 532138971 | 596-900* | LG 380 |
| 532138971 | 96-900* | LG 526 |
| 532139775 | 195-019 | LG 466 |
| 532139775 | 596-900* | LG 380 |
| 532139775 | 96-900* | LG 526 |
| 532141114 | 195-021 | LG 468 |
| 532141114 | 595-602* | LG 403 |
| 532141114 | 95-602* | LG 403 |
| 532143978 | 95-031 | LG 377 |
| 532145106 | 595-024* | LG 465 |
| 532145106 | 95-051 | LG 465 |
| 532152202 | 195-021 | LG 468 |
| 532152202 | 595-602* | LG 403 |
| 532152202 | 95-602* | LG 403 |
| 532173921 | 596-615* | LG 529 |
| 532173921 | 95-068 | LG 376 |
| 532173921 | 96-615* | LG 461 |
| 532175064 | 595-621* | LG 467 |
| 532175064 | 95-057 | LG 380 |
| 532175064 | 95-621* | LG 402 |
| 532180054 | 195-062 | LG 376 |
| 532180054 | 596-615* | LG 529 |
| 532180054 | 96-615* | LG 461 |
| 532187255 | 595-605* | LG 422 |
| 532187255 | 95-082 | LG 372 |
| 532187255 | 95-605* | LG 463 |
| 532187256 | 195-072 | LG 530 |
| 532187256 | 595-605* | LG 422 |
| 532187256 | 95-605* | LG 463 |
| 532189028 | 195-067 | LG 380 |
| 532189028 | 595-621* | LG 467 |
| 532189028 | 95-621* | LG 402 |
| 532192682 | 595-602* | LG 403 |
| 532192682 | 95-073 | LG 533 |
| 532192682 | 95-602* | LG 403 |
| 532193957 | 195-003 | LG 400 |
| 532193957 | 595-601* | LG 400 |
| 532193957 | 95-601* | LG 423 |
| 53234148 | 195-003 | LG 400 |
| 53234148 | 595-601* | LG 400 |
| 53234148 | 95-601* | LG 423 |
| 532403107 | 596-370* | LG 427 |
| 532403107 | 95-074 | LG 533 |
| 532403107 | 96-370* | LG 533 |
| 532405380 | 195-070 | LG 469 |
| 532405380 | 596-370* | LG 427 |
| 532405380 | 96-370* | LG 533 |
| 532406707 | 595-602* | LG 403 |
| 532406707 | 95-023 | LG 380 |
| 532406707 | 95-602* | LG 403 |
| 532406712 | 595-621* | LG 467 |
| 532406712 | 95-057 | LG 380 |
| 532406712 | 95-621* | LG 402 |
| 532406713 | 595-602* | LG 403 |
| 532406713 | 95-023 | LG 380 |
| 532406713 | 95-602* | LG 403 |
| 532419273 | 595-807* | LG 382 |
| 532419274 | 595-807* | LG 382 |
| 532420463 | 95-076 | LG 404 |
| 532420463 | 95-615* | LG 426 |
| 532752233 | 595-024* | LG 465 |
| 532752233 | 95-044 | LG 465 |
| 532850972 | 595-024* | LG 465 |
| 532850972 | 95-024 | LG 465 |
| 532850973 | 595-602* | LG 403 |
| 532850973 | 95-023 | LG 380 |
| 532850973 | 95-602* | LG 403 |
| 539107519 | 195-062 | LG 376 |
| 539107519 | 596-615* | LG 529 |
| 539107519 | 96-615* | LG 461 |
| 539110324 | 195-003 | LG 400 |
| 539110324 | 595-601* | LG 400 |
| 539110324 | 95-601* | LG 423 |
| 539111878 | 195-067 | LG 380 |
| 539111878 | 595-621* | LG 467 |
| 539111878 | 95-621* | LG 402 |
| 539112053 | 195-072 | LG 530 |
| 539112053 | 595-605* | LG 422 |
| 539112053 | 95-605* | LG 463 |
| 56401 | 595-602* | LG 403 |
| 56401 | 95-023 | LG 380 |
| 56401 | 95-602* | LG 403 |
| 574292401 | 195-072 | LG 530 |
| 574292401 | 595-605* | LG 422 |
| 574292401 | 95-605* | LG 463 |
| 575157101 | 195-021 | LG 468 |
| 575157101 | 595-602* | LG 403 |
| 575157101 | 95-602* | LG 403 |
| 575937801 | 596-370* | LG 427 |
| 575937801 | 95-074 | LG 533 |
| 575937801 | 96-370* | LG 533 |
| 575937901 | 195-070 | LG 469 |
| 575937901 | 596-370* | LG 427 |
| 575937901 | 96-370* | LG 533 |
| 575938201 | 195-062 | LG 376 |
| 575938201 | 596-615* | LG 529 |
| 575938201 | 96-615* | LG 461 |
| 575938301 | 195-062 | LG 376 |
| 575938301 | 596-615* | LG 529 |
| 575938301 | 96-615* | LG 461 |
| 575938401 | 195-072 | LG 530 |
| 575938401 | 595-605* | LG 422 |
| 575938401 | 95-605* | LG 463 |
| 575938501 | 595-605* | LG 422 |
| 575938501 | 95-082 | LG 372 |
| 575938501 | 95-605* | LG 463 |
| 580244001 | 95-615* | LG 426 |
| 580258101 | 595-621* | LG 467 |
| 580258101 | 95-621* | LG 402 |
| 580258102 | 595-621* | LG 467 |
| 580258102 | 95-621* | LG 402 |
| 581116301 | 195-003 | LG 400 |
| 581116301 | 595-601* | LG 400 |
| 581116301 | 95-601* | LG 423 |
| 581694101 | 595-621* | LG 467 |
| 581694101 | 95-057 | LG 380 |
| 581694101 | 95-621* | LG 402 |
| 582923101 | 595-605* | LG 422 |
| 582923101 | 95-082 | LG 372 |
| 582923101 | 95-605* | LG 463 |
| 582928101 | 595-807* | LG 382 |
| 582931401 | 595-602* | LG 403 |
| 582931401 | 95-073 | LG 533 |
| 582931401 | 95-602* | LG 403 |
| 585587701 | 95-615* | LG 426 |
| 69334 | 595-602* | LG 403 |
| 69334 | 95-023 | LG 380 |
| 69334 | 95-602* | LG 403 |
| 777187256 | 195-072 | LG 530 |
| 777187256 | 595-605* | LG 422 |
| 777187256 | 95-605* | LG 463 |
| 777405380 | 195-070 | LG 469 |
| 777405380 | 596-370* | LG 427 |
| 777405380 | 96-370* | LG 533 |
| 777419274 | 595-807* | LG 382 |
| 8021 | 595-602* | LG 403 |
| 8021 | 95-023 | LG 380 |
| 8021 | 95-602* | LG 403 |
| 917532406707 | 595-602* | LG 403 |
| 917532406707 | 95-073 | LG 533 |
| 917532406707 | 95-602* | LG 403 |
| 952014129 | 55-226 | LG 212 |
| 952-014129 | 55-226 | LG 212 |
| PP12001 | 15-664 | LG 311 |
| PP12002 | 15-665 | LG 311 |
| PP12012 | 15-667 | LG 311 |
| PP13006 | 15-668 | LG 311 |
| PP13007 | 15-669 | LG 311 |
| PP13008 | 15-670 | LG 311 |
| PP13010 | 15-672 | LG 311 |
| PP13011 | 15-673 | LG 311 |
| PP22055 | 595-024* | LG 465 |
| PP22055 | 95-044 | LG 465 |
| PP23020 | 195-067 | LG 380 |
| PP23020 | 595-621* | LG 467 |
| PP23020 | 95-621* | LG 402 |
| PP24004 | 195-032 | LG 425 |
| PP24004 | 596-900* | LG 380 |
| PP24004 | 96-900* | LG 526 |
| **POWER EQUIPMENT DIST** | | |
| 754-0145 | 75-145 | LG 300 |
| 754-0230 | 75-008 | LG 301 |
| 954-0145 | 75-145 | LG 300 |
| 954-0145A | 75-145 | LG 300 |
| 954-015A | 75-145 | LG 300 |
| 954-0230 | 75-008 | LG 301 |
| **POWER KING** | | |
| 03-2018 | 33-386 | LG 942 |
| 03-2028 | 33-389 | LG 945 |
| 03-7101 | 33-384 | LG 947 |
| 23-7602 | 07-315 | LG 772 |
| **POWER TRIM** | | |
| 307 | 78-676 | LG 839 |
| 310 | 40-131 | LG 586 |
| 334 | 78-675 | LG 839 |
| 334-1 | 78-677 | LG 839 |
| 339 | 75-010 | LG 311 |
| 339-1 | 15-002 | LG 311 |
| 4L280 | 75-010 | LG 311 |
| **PRO** | | |
| 7520070 | 60-408 | LG 700 |
| 7523008 | 44-310 | LG 840 |
| **PRO HARDWARE** | | |
| 754-0145 | 75-145 | LG 300 |
| 754-0151 | 75-004 | LG 301 |
| 754-0178 | 75-179 | LG 310 |
| 754-0201 | 75-441 | LG 334 |
| 754-0234 | 75-441 | LG 334 |
| 754-0240 | 75-009 | LG 301 |
| 754-0241 | 75-012 | LG 301 |
| 754-0935 | 75-092 | LG 304 |
| 954-0145 | 75-145 | LG 300 |
| 954-0145A | 75-145 | LG 300 |
| 954-0151 | 75-004 | LG 301 |
| 954-015A | 75-145 | LG 300 |
| 954-0178 | 75-179 | LG 310 |
| 954-0201 | 75-441 | LG 334 |
| 954-0234 | 75-441 | LG 334 |
| 954-0240 | 75-009 | LG 301 |
| 954-0241 | 75-012 | LG 301 |
| 954-0241A | 75-012 | LG 301 |
| 954-0935 | 75-092 | LG 304 |
| **PROFESSIONAL HARDWARE** | | |
| 754-0145 | 75-145 | LG 300 |
| 754-0178 | 75-179 | LG 310 |
| 754-0935 | 75-092 | LG 304 |
| 954-0145 | 75-145 | LG 300 |
| 954-0145A | 75-145 | LG 300 |
| 954-015A | 75-145 | LG 300 |
| 954-0178 | 75-179 | LG 310 |
| 954-0935 | 75-092 | LG 304 |
| **PROGRESSIVE TURF** | | |
| 522360 | 94-121 | LG 534 |
| 522364 | 94-122 | LG 534 |
| 522372 | 91-593 | LG 534 |
| 522376 | 94-123 | LG 534 |
| 526601 | 94-124 | LG 534 |
| 526615 | 91-594 | LG 534 |
| **QUALITY FARM & FLEET** | | |
| 754-0145 | 75-145 | LG 300 |
| 954-0145 | 75-145 | LG 300 |
| 954-0145A | 75-145 | LG 300 |
| 954-015A | 75-145 | LG 300 |
| **QUINSTAR** | | |
| 330576 | 83-010 | LG 819 |
| 330576 | 83-400 | LG 819 |
| **RANSOMES INC.** | | |
| 2720646 | 72-741 | LG 1046 |
| 2722228 | 72-739 | LG 1046 |
| 38264 | 72-741 | LG 1046 |
| **RAUB** | | |
| 754-0151 | 75-004 | LG 301 |
| 954-0151 | 75-004 | LG 301 |
| **RED MAX** | | |
| 110051113 | 55-252 | LG 1019 |
| 1100-51113 | 55-252 | LG 1019 |
| 1100-51114 | 55-252 | LG 1019 |
| 110375220 | 43-685 | LG 936 |
| 113000602 | 55-252 | LG 1019 |
| 1130-00602 | 55-252 | LG 1019 |
| 1272-06020 | 49-812 | LG 612 |
| 1272-06030 | 49-816 | LG 612 |
| 1491-61510 | 49-027 | LG 769 |
| 1491-81510 | 49-027 | LG 769 |
| 180064 | 40-140 | LG 584 |
| 1850-85300 | 07-219 | LG 779 |

X



* OREGON® Gator™ replacement blade

| OEM No. | OREGON | Page |
|---|---|---|
| **RED MAX** | | |
| 26367-15110 | 40-140 | LG 584 |
| 2670-06020 | 49-812 | LG 612 |
| 2670-06030 | 49-816 | LG 612 |
| 3039-06030 | 49-816 | LG 612 |
| 3302-85400 | 07-214 | LG 779 |
| 3306-81380 | 55-342 | LG 627 |
| 3310-81310 | 49-021 | LG 629 |
| 3310-81380 | 55-342 | LG 627 |
| 3359-06010 | 49-835 | LG 611 |
| 3496-06020 | 49-835 | LG 611 |
| 401282320 | 30-955 | LG 212 |
| 505175301 | 40-140 | LG 584 |
| 521452001 | 40-140 | LG 584 |
| 544271501 | 30-068 | LG 212 |
| 544271601 | 30-955 | LG 212 |
| 550082171 | 30-067 | LG 212 |
| 5500-82171 | 30-067 | LG 212 |
| 5500-85400 | 07-219 | LG 779 |
| 550-82171 | 30-067 | LG 212 |
| 613223 | 40-140 | LG 584 |
| 6367-15110 | 40-140 | LG 584 |
| EXZ2460S | 40-140 | LG 584 |
| HE2200LDC | 40-140 | LG 584 |
| HE2600 | 40-140 | LG 584 |
| HE261 | 40-140 | LG 584 |
| HEZ2460F | 40-140 | LG 584 |
| HEZ2460S | 40-140 | LG 584 |
| HEZ2601S | 40-140 | LG 584 |
| HEZ2610F | 40-140 | LG 584 |
| HEZ2650F | 40-140 | LG 584 |
| HEZ3060E | 40-140 | LG 584 |
| HEZ3060S | 40-140 | LG 584 |
| T401282310 | 30-068 | LG 212 |
| T4012-82310 | 30-068 | LG 212 |
| T4012-82311 | 30-068 | LG 212 |
| T401282320 | 30-955 | LG 212 |
| T4012-82320 | 30-955 | LG 212 |
| T4012-82321 | 30-955 | LG 212 |
| **REDHAWK** | | |
| 148-005 | 396-716* | LG 451 |
| 148-005 | 596-310* | LG 447 |
| 148-005 | 96-310* | LG 444 |
| 148-005 | 99-127 | LG 375 |
| **ROBIN AMERICA/SUBARU** | | |
| 106-32704-07 | 30-713 | LG 221 |
| 106-62516-00 | 49-226 | LG 596 |
| 1082 | 55-231 | LG 212 |
| 226-62341-00 | 49-227 | LG 596 |
| 227-36002-03 | 30-968 | LG 222 |
| 227-50211-00 | 31-054 | LG 924 |
| 227-50211-01 | 31-054 | LG 924 |
| 227-50405-00 | 31-054 | LG 924 |
| 227-50811-10 | 31-054 | LG 924 |
| 227-62333-00 | 49-228 | LG 596 |
| 252-32614-08 | 30-162 | LG 222 |
| 263-32610-01 | 30-717 | LG 221 |
| 274-32603-07 | 30-162 | LG 222 |
| 282-50211-00 | 31-054 | LG 924 |
| A6000-260-0000 | 43-685 | LG 936 |
| EY-20 | 33-525 | LG 786 |
| EY2353261008 | 30-924 | LG 186 |
| RA-263-32610-01 | 30-717 | LG 221 |
| **RONCONI** | | |
| 754-0935 | 75-092 | LG 304 |
| 954-0935 | 75-092 | LG 304 |
| **ROPER** | | |
| 016-176 | 34-031 | LG 821 |
| 016-371 | 34-033 | LG 821 |
| 101273M | 35-021 | LG 810 |
| 101477 | 82-677 | LG 903 |
| 101477X | 82-677 | LG 903 |
| 101677X | 55-803 | LG 1022 |
| 102655X | 15-688 | LG 315 |
| 103R | 33-331 | LG 730 |
| 105307X | 34-036 | LG 821 |
| 105313X | 78-043 | LG 824 |
| 105455X | 72-306 | LG 1038 |
| 106863X | 15-691 | LG 260 |
| 107707X | 72-456 | LG 1036 |
| 108597X | 15-691 | LG 260 |
| 109081X | 33-334 | LG 730 |
| 109946 | 33-334 | LG 730 |
| 110484 | 34-034 | LG 821 |
| 111924X | 15-693 | LG 311 |
| 121687 | 82-678 | LG 904 |
| 124293X | 15-695 | LG 260 |
| 128774 | 82-220 | LG 871 |
| 130794 | 82-225 | LG 871 |
| 137646 | 85-017 | LG 907 |
| 141416 | 15-700 | LG 259 |
| 144200 | 75-099 | LG 262 |
| 146154 | 33-331 | LG 730 |
| 146154 | 33-334 | LG 730 |
| 1553H | 45-206 | LG 231 |
| 1554H | 45-205 | LG 228 |
| 1649J | 34-036 | LG 821 |
| 165555 | 15-704 | LG 311 |
| 165631 | 15-705 | LG 315 |
| 169178 | 15-708 | LG 312 |
| 170140 | 15-711 | LG 259 |
| 173437 | 78-054 | LG 824 |
| 173901 | 78-053 | LG 824 |
| 175820 | 78-052 | LG 824 |
| 179092 | 15-712 | LG 260 |
| 187284 | 78-051 | LG 824 |
| 2008J | 33-331 | LG 730 |
| 2504J | 49-800 | LG 610 |
| 2887J | 07-102 | LG 774 |
| 3366R | 45-073 | LG 227 |
| 3483 | 35-010 | LG 809 |
| 3621R | 33-386 | LG 942 |
| 371979 | 07-102 | LG 774 |
| 372644 | 35-006 | LG 808 |
| 42174 | 72-106 | LG 1029 |
| 4371J | 34-015 | LG 821 |
| 4406R | 33-386 | LG 942 |
| 4702H | 34-003 | LG 821 |
| 4827H | 34-030 | LG 821 |
| 4933H | 34-005 | LG 821 |
| 4933H | 34-006 | LG 821 |
| 5276R | 83-300 | LG 819 |
| 53018 | 34-030 | LG 821 |
| 532141416 | 15-700 | LG 259 |
| 532165631 | 15-705 | LG 315 |
| 532170140 | 15-711 | LG 259 |
| 5375 | 78-043 | LG 824 |
| 6109J | 34-011 | LG 821 |
| 61620 | 34-015 | LG 821 |
| 62828 | 15-715 | LG 315 |
| 66048 | 34-003 | LG 821 |
| 67400 | 34-008 | LG 821 |
| 677A14 | 82-677 | LG 903 |
| 677A181 | 82-677 | LG 903 |
| 677A880 | 33-331 | LG 730 |
| 702245 | 72-456 | LG 1036 |
| 71275 | 82-677 | LG 903 |
| 72215 | 78-043 | LG 824 |
| 73558 | 82-677 | LG 903 |
| 74977 | 15-716 | LG 315 |
| 75672 | 34-031 | LG 821 |
| 75673 | 34-002 | LG 821 |
| 76557 | 34-002 | LG 821 |
| 76980 | 34-006 | LG 821 |
| 7754R | 33-331 | LG 730 |
| 7838R | 45-109 | LG 939 |
| 78744 | 34-005 | LG 821 |
| 83059 | 49-170 | LG 758 |
| 850053 | 15-717 | LG 260 |
| 8514R | 45-109 | LG 939 |
| 88074 | 15-718 | LG 259 |
| 8846R | 34-034 | LG 821 |
| 917532062828 | 15-715 | LG 315 |
| 917532141416 | 15-700 | LG 259 |
| 917532165631 | 15-705 | LG 315 |
| 917532170140 | 15-711 | LG 259 |
| 9178 | 34-002 | LG 821 |
| 9180R | 15-719 | LG 312 |
| 9492H | 34-017 | LG 821 |
| 9576H | 49-802 | LG 610 |
| STD365402 | 33-386 | LG 942 |
| **RYAN** | | |
| 14060 | 49-816 | LG 612 |
| 14061 | 49-812 | LG 612 |
| 153066 | 55-803 | LG 1022 |
| 2701410 | 89-001 | LG 590 |
| 522361 | 89-001 | LG 590 |
| 610317 | 05-072 | LG 1023 |
| 610675 | 49-170 | LG 758 |
| 613223 | 40-143 | LG 587 |
| 682030 | 55-820 | LG 935 |
| 683856 | 55-800 | LG 934 |
| **RYOBI** | | |
| 147496 | 55-812 | LG 1022 |
| 153592 | 55-184 | LG 1019 |
| 153619 | 55-179 | LG 1023 |
| 180814 | 55-812 | LG 1022 |
| 181468 | 55-182 | LG 1023 |
| 682039 | 07-017 | LG 1022 |
| 683974 | 49-088-0 | LG 631 |
| 683974 | 55-138 | LG 768 |
| 791-613223 | 40-143 | LG 587 |
| 791-613223B | 40-143 | LG 587 |
| DP153592 | 55-184 | LG 1019 |
| **SABRE** | | |
| 883S-25R | 58-040 | LG 961 |
| H1-N7256-NS | 58-110 | LG 960 |
| H1-N7257-NS | 58-114 | LG 960 |
| H1-N7262-NS | 58-112 | LG 960 |
| **SACHS-DOLMAR** | | |
| 010.151.020.0 | 49-812 | LG 612 |
| 021.151.180.0 | 55-342 | LG 627 |
| 021.151.540.0 | 49-812 | LG 612 |
| 108.151.190.0 | 49-021 | LG 629 |
| 118.151.210.0 | 49-833 | LG 611 |
| 118.151.520.0 | 49-807 | LG 611 |
| 119.151.540.7 | 49-835 | LG 611 |
| 144.150.030.0 | 55-333 | LG 633 |
| 144.150.360.0 | 49-021 | LG 629 |
| 375.151.060.0 | 49-026 | LG 769 |
| A6000-260-0000 | 43-685 | LG 936 |
| **SANDVIK** | | |
| 50RG-56D | 58-110 | LG 960 |
| 50RG-57D | 58-114 | LG 960 |
| 50RG-62D | 58-112 | LG 960 |
| 63A-66D | 58-242 | LG 958 |
| 63AG-25R | 58-040 | LG 961 |
| **SCAG** | | |
| 0402-09 | 04-125 | LG 694 |
| 04063-07 | 02-535 | |
| 4001-41 | 04-125 | LG 694 |
| 421239 | 76-143 | LG 698 |
| 43001-02 | 82-305 | LG 908 |
| 43022 | 45-188 | LG 230 |
| 43025 | 48-006 | LG 694 |
| 43037-01 | 09-804 | LG 233 |
| 43038 | 48-141 | LG 249 |
| 43044 | 78-101 | LG 249 |
| 43278 | 48-141 | LG 249 |
| 45006 | 48-202 | LG 694 |
| 46020 | 82-325 | LG 903 |
| 461663 | 82-325 | LG 903 |
| 46400 | 82-325 | LG 903 |
| 46513 | 48-148 | LG 695 |
| 46631 | 82-325 | LG 903 |
| 48005-04 | 45-002 | LG 237 |
| 48005-05 | 45-002 | LG 237 |
| 48006-01 | 72-795 | LG 1044 |
| 48006-03 | 71-274 | LG 956 |
| 48006-1 | 72-795 | LG 1044 |
| 48017 | 33-386 | LG 942 |
| 48017-01 | 33-386 | LG 942 |
| 48017-02 | 33-386 | LG 942 |
| 48017-02 | 42-008 | LG 945 |
| 48017-03 | 33-386 | LG 942 |
| 48017-04 | 33-386 | LG 942 |
| 48018 | 33-350 | LG 949 |
| 48056 | 07-400 | LG 767 |
| 48057-02 | 07-101 | LG 775 |
| 48068 | 34-007 | LG 826 |
| 48083 | 75-036 | LG 297 |
| 48084 | 15-674 | LG 312 |
| 48087 | 75-154 | LG 312 |
| 48088 | 75-155 | LG 312 |
| 48089 | 75-055 | LG 255 |
| 48091 | 60-123 | LG 717 |
| 48100-01 | 45-127 | LG 244 |
| 48100-02 | 48-320 | LG 238 |
| 48100-20 | 48-320 | LG 238 |
| 48101 | 45-220 | LG 232 |
| 48101-01 | 45-220 | LG 232 |
| 48101-02 | 45-220 | LG 232 |
| 48102 | 45-257 | LG 245 |
| 481022 | 45-257 | LG 245 |
| 481024 | 49-314 | LG 910 |
| 481071 | 60-380 | LG 717 |
| 48108 | 396-726* | LG 391 |
| 48108 | 596-344* | LG 495 |
| 48108 | 91-622 | LG 536 |
| 48108 | 96-344* | LG 536 |
| 481091 | 60-123 | LG 717 |
| 48110 | 396-735* | LG 452 |
| 48110 | 596-308* | LG 548 |
| 48110 | 91-621 | LG 563 |
| 48110 | 96-308* | LG 456 |
| 48111 | 396-727* | LG 467 |
| 48111 | 596-347* | LG 448 |
| 48111 | 91-626 | LG 552 |
| 48111 | 96-347* | LG 387 |
| 48112 | 396-764* | LG 537 |
| 48112 | 596-341* | LG 482 |
| 48112 | 91-627 | LG 482 |
| 48112 | 96-341* | LG 446 |
| 48118 | 45-104 | LG 939 |
| 48127 | 78-642 | LG 841 |
| 48141 | 78-642 | LG 841 |
| 481460 | 75-215 | LG 313 |
| 481461 | 75-268 | LG 313 |
| 481498 | 15-677 | LG 313 |
| 481499 | 15-678 | LG 313 |
| 481529 | 27-502 | LG 725 |
| 481557 | 75-270 | LG 257 |
| 481558 | 75-216 | LG 257 |
| 481632 | 72-758 | LG 1042 |
| 481635 | 33-002 | LG 946 |
| 481637 | 33-015 | LG 948 |
| 481657 | 45-002 | LG 237 |
| 481662 | 60-028 | LG 718 |
| 48168 | 78-642 | LG 841 |
| 4817-02 | 42-008 | LG 945 |

X

* OREGON® Gator™ replacement blade

# 2019 OEM X-Reference

| OEM No. | OREGON | Page |
|---|---|---|
| **SCAG** | | |
| 481706 | 396-735* | LG 452 |
| 481706 | 596-308* | LG 548 |
| 481706 | 91-621 | LG 563 |
| 481706 | 96-308* | LG 456 |
| 481707 | 396-726* | LG 391 |
| 481707 | 596-344* | LG 495 |
| 481707 | 91-622 | LG 536 |
| 481707 | 96-344* | LG 536 |
| 481708 | 396-727* | LG 467 |
| 481708 | 596-347* | LG 448 |
| 481708 | 91-626 | LG 552 |
| 481708 | 96-347* | LG 387 |
| 481709 | 396-764* | LG 537 |
| 481709 | 596-341* | LG 482 |
| 481709 | 91-627 | LG 482 |
| 481709 | 96-341* | LG 446 |
| 481710 | 396-735* | LG 452 |
| 481710 | 596-308* | LG 548 |
| 481710 | 91-621 | LG 563 |
| 481710 | 96-308* | LG 456 |
| 481711 | 396-726* | LG 391 |
| 481711 | 596-344* | LG 495 |
| 481711 | 91-623 | LG 485 |
| 481711 | 96-344* | LG 536 |
| 481712 | 396-727* | LG 467 |
| 481712 | 596-347* | LG 448 |
| 481712 | 91-628 | LG 387 |
| 481712 | 96-347* | LG 387 |
| 481749 | 75-715 | LG 313 |
| 481769 | 45-053 | LG 230 |
| 481770 | 45-038 | LG 224 |
| 481774 | 72-741 | LG 1046 |
| 48181 | 78-121 | LG 827 |
| 48184 | 396-735* | LG 452 |
| 48184 | 596-308* | LG 548 |
| 48184 | 91-621 | LG 563 |
| 48184 | 96-308* | LG 456 |
| 48185 | 396-726* | LG 391 |
| 48185 | 596-344* | LG 495 |
| 48185 | 91-623 | LG 485 |
| 48185 | 96-344* | LG 536 |
| 481858 | 45-031 | LG 232 |
| 481895 | 45-002 | LG 237 |
| 481896 | 72-795 | LG 1044 |
| 48193-01 | 45-031 | LG 232 |
| 48198 | 78-300 | LG 833 |
| 481980 | 15-679 | LG 313 |
| 48199 | 78-673 | LG 839 |
| 48200 | 78-680 | LG 840 |
| 48202 | 75-260 | LG 312 |
| 48202A | 75-260 | LG 312 |
| 48203 | 75-043 | LG 312 |
| 48204 | 75-054 | LG 312 |
| 48207 | 15-680 | LG 312 |
| 482090 | 75-625 | LG 313 |
| 48210 | 48-145 | LG 698 |
| 482137 | 15-681 | LG 313 |
| 482139 | 75-681 | LG 313 |
| 48224 | 45-242 | LG 243 |
| 48226 | 48-148 | LG 695 |
| 482281 | 75-681 | LG 313 |
| 482306 | 78-007 | LG 833 |
| 482461 | 396-735* | LG 452 |
| 482461 | 596-308* | LG 548 |
| 482461 | 91-621 | LG 563 |
| 482461 | 96-308* | LG 456 |
| 482462 | 396-726* | LG 391 |
| 482462 | 596-344* | LG 495 |
| 482462 | 91-622 | LG 536 |
| 482462 | 96-344* | LG 536 |
| 482503 | 72-735 | LG 1045 |
| 482504 | 72-736 | LG 1045 |
| 482529 | 75-682 | LG 258 |
| 482530 | 75-629 | LG 314 |
| 482531 | 75-632 | LG 314 |
| 482639 | 27-502 | LG 725 |
| 48265 | 75-047 | LG 313 |
| 482652 | 75-631 | LG 314 |
| 48269 | 78-300 | LG 833 |
| 482708 | 91-628 | LG 387 |
| 482716 | 75-632 | LG 314 |
| 482744 | 78-642 | LG 841 |
| 482787 | 396-727* | LG 467 |
| 482787 | 596-347* | LG 448 |
| 482787 | 91-638 | LG 426 |
| 482787 | 96-347* | LG 387 |
| 482788 | 396-764* | LG 537 |
| 482788 | 596-341* | LG 482 |
| 482788 | 91-627 | LG 482 |
| 482788 | 96-341* | LG 446 |
| 48285 | 75-048 | LG 313 |
| 48286 | 75-058 | LG 255 |
| 482876 | 15-046 | LG 314 |
| 482877 | 396-735* | LG 452 |
| 482877 | 596-308* | LG 548 |
| 482877 | 91-621 | LG 563 |
| 482877 | 96-308* | LG 456 |
| 482878 | 396-726* | LG 391 |
| 482878 | 596-344* | LG 495 |
| 482878 | 91-637 | LG 507 |
| 482878 | 96-344* | LG 536 |
| 482879 | 396-727* | LG 467 |
| 482879 | 596-347* | LG 448 |
| 482879 | 91-622 | LG 536 |
| 482879 | 91-638 | LG 426 |
| 482879 | 96-347* | LG 387 |
| 482881 | 396-727* | LG 467 |
| 482881 | 596-347* | LG 448 |
| 482881 | 91-638 | LG 426 |
| 482881 | 96-347* | LG 387 |
| 482882 | 396-764* | LG 537 |
| 482882 | 596-341* | LG 482 |
| 482882 | 91-627 | LG 482 |
| 482882 | 96-341* | LG 446 |
| 482959 | 91-636 | LG 535 |
| 482959 | 96-661* | LG 535 |
| 482961 | 396-726* | LG 391 |
| 482961 | 596-344* | LG 495 |
| 482961 | 96-344* | LG 536 |
| 483001 | 75-634 | LG 314 |
| 483002 | 75-635 | LG 314 |
| 48304 | 396-727* | LG 467 |
| 48304 | 596-347* | LG 448 |
| 48304 | 91-638 | LG 426 |
| 48304 | 96-347* | LG 387 |
| 48307 | 72-741 | LG 1046 |
| 48307 | 72-795 | LG 1044 |
| 48307-01 | 72-795 | LG 1044 |
| 48307-02 | 72-741 | LG 1046 |
| 483084 | 75-637 | LG 253 |
| 483086 | 15-045 | LG 314 |
| 483086 | 75-045 | LG 307 |
| 48309 | 07-392 | LG 767 |
| 48311 | 07-315 | LG 772 |
| 483157 | 75-637 | LG 253 |
| 483165 | 15-047 | |
| 483166 | 15-045 | LG 314 |
| 483166 | 75-045 | LG 307 |
| 483172 | 75-641 | LG 314 |
| 483190 | 27-504 | LG 725 |
| 483211 | 78-300 | LG 833 |
| 483213 | 78-007 | LG 833 |
| 483215 | 78-300 | LG 833 |
| 483239 | 75-642 | LG 314 |
| 483241 | 75-644 | LG 314 |
| 483242 | 75-645 | LG 314 |
| 483243 | 75-646 | LG 257 |
| 483317 | 91-622 | LG 536 |
| 483325 | 75-648 | LG 257 |
| 483326 | 75-649 | LG 258 |
| 483518 | 75-058 | LG 255 |
| 483741 | 15-134 | LG 314 |
| 483913 | 33-024 | LG 945 |
| 484088 | 15-135 | LG 314 |
| 484159 | 15-136 | LG 314 |
| 48442 | 45-295 | LG 232 |
| 48462-01 | 83-012 | LG 819 |
| 48464 | 45-302 | LG 804 |
| 48473 | 78-007 | LG 833 |
| 48553 | 15-682 | LG 313 |
| 48568 | 07-403 | LG 766 |
| 48587 | 75-052 | LG 313 |
| 48607 | 15-683 | LG 313 |
| 48609 | 33-024 | LG 945 |
| 48617 | 33-024 | LG 945 |
| 48668 | 45-002 | LG 237 |
| 48717 | 33-019 | LG 948 |
| 48757 | 83-011 | LG 819 |
| 48758 | 83-011 | LG 819 |
| 48760 | 75-663 | LG 279 |
| 48780 | 60-125 | LG 718 |
| 48787 | 33-410 | LG 947 |
| 48787-01 | 33-410 | LG 947 |
| 48798 | 33-399 | LG 944 |
| 48799 | 75-904 | LG 313 |
| 48828 | 46-416 | LG 718 |
| 48854 | 15-684 | LG 313 |
| 48912 | 75-044 | LG 313 |
| 48924 | 78-642 | LG 841 |
| 48926 | 78-003 | LG 839 |
| 48946 | 60-027 | LG 718 |
| 48996 | 75-370 | LG 257 |
| 5022061 | 75-631 | LG 314 |
| 783326 | 75-649 | LG 258 |
| 9664 | 33-019 | LG 948 |
| A48083 | 75-036 | LG 297 |
| A48108 | 91-637 | LG 507 |
| A48110 | 91-620 | LG 470 |
| A48110 | 91-621 | LG 563 |
| A48110 | 92-145 | LG 535 |
| A-48110 | 91-620 | LG 470 |
| A481108 | 91-622 | LG 536 |
| A48111 | 91-628 | LG 387 |
| A48184 | 91-620 | LG 470 |
| A48184 | 91-621 | LG 563 |
| A48184 | 92-145 | LG 535 |
| A-48184HL | 91-621 | LG 563 |
| A48185 | 91-622 | LG 536 |
| A48185 | 91-637 | LG 507 |
| A48286 | 75-058 | LG 255 |
| A48304 | 91-628 | LG 387 |
| HG44147 | 45-130 | LG 232 |
| **SCOTTS** | | |
| 495100 | 197-019 | LG 539 |
| 56631E701 | 597-606* | LG 522 |
| 56631E701 | 97-017 | LG 537 |
| 56631E701 | 97-606* | LG 522 |
| 710532 | 15-685 | LG 315 |
| 710533 | 15-686 | LG 315 |
| 774048 | 97-018 | LG 523 |
| 94692 | 97-018 | LG 523 |
| 95100 | 197-019 | LG 539 |
| M115496 | 396-706* | LG 538 |
| M115496 | 596-306* | LG 487 |
| M115496 | 91-380 | LG 538 |
| M115496 | 96-306* | LG 538 |
| M127466 | 396-725* | LG 538 |
| M127466 | 91-448 | LG 482 |
| M127466 | 96-394* | LG 538 |
| M135589 | 91-447 | LG 538 |
| M135589 | 96-618* | LG 483 |
| M139802 | 91-449 | LG 492 |
| M139802 | 96-340* | LG 539 |
| **SEARS** | | |
| 037X22MA | 75-022 | LG 307 |
| 037X38MA | 75-038 | LG 307 |
| 037X40MA | 75-040 | LG 306 |
| 037X43MA | 75-005 | LG 307 |
| 037X44MA | 75-038 | LG 307 |
| 037X45MA | 75-045 | LG 307 |
| 037X57MA | 75-057 | LG 307 |
| 037X61MA | 75-061 | LG 307 |
| 037X61MA | 75-111 | LG 306 |
| 037X62MA | 75-041 | LG 255 |
| 037X65MA | 75-065 | LG 307 |
| 07133022000P | 98-093 | LG 411 |
| 07133032000P | 198-153 | LG 520 |
| 07133034000P | 95-602* | LG 403 |
| 07133049000P | 98-629* | LG 412 |
| 07133058000P | 95-621* | LG 402 |
| 07133256000P | 195-021 | LG 468 |
| 100669K | 95-015 | LG 400 |
| 10096 | 30-301 | LG 217 |
| 10096 | 30-801 | LG 217 |
| 10096 | 69-034 | LG 217 |
| 101477 | 82-677 | LG 903 |
| 101477X | 82-677 | LG 903 |
| 101766X | 72-437 | LG 1030 |
| 102080X | 82-678 | LG 904 |
| 102655X | 15-688 | LG 315 |
| 103R | 33-331 | LG 730 |
| 105455X | 72-306 | LG 1038 |
| 105891 | 82-678 | LG 904 |
| 105891X | 82-678 | LG 904 |
| 106085X | 75-107 | LG 254 |
| 106634 | 95-015 | LG 400 |
| 106634X | 95-015 | LG 400 |
| 106635X | 95-014 | LG 374 |
| 106863X | 15-691 | LG 260 |
| 107707X | 72-456 | LG 1036 |
| 108597X | 15-691 | LG 260 |
| 109081X | 33-331 | LG 730 |
| 109946X | 33-331 | LG 730 |
| 110785X | 95-034 | LG 377 |
| 110883 | 75-108 | LG 289 |
| 110883X | 75-108 | LG 289 |
| 111924X | 15-693 | LG 311 |
| 114884 | 95-044 | LG 465 |
| 114886 | 95-023 | LG 380 |
| 12000029 | 02-020 | |
| 120262X | 95-034 | LG 377 |
| 121263X | 95-031 | LG 377 |
| 121676X | 82-678 | LG 904 |
| 121687X | 82-678 | LG 904 |
| 121798X | 95-027 | LG 398 |
| 123431X | 95-031 | LG 377 |
| 123796X | 75-111 | LG 306 |
| 124293X | 15-695 | LG 260 |
| 126338X | 95-034 | LG 377 |
| 126847 | 45-128 | LG 228 |
| 126847X | 45-128 | LG 228 |
| 126957X | 70-334 | LG 959 |
| 127841 | 95-036 | LG 463 |
| 128774 | 82-220 | LG 871 |
| 129277 | 95-051 | LG 465 |
| 130652 | 95-006 | LG 397 |
| 130652MS | 95-006 | LG 397 |
| 130794 | 82-225 | LG 871 |
| 130861 | 46-325 | LG 701 |
| 130969 | 75-106 | LG 261 |
| 131264 | 75-097 | LG 289 |
| 131322 | 95-047 | LG 378 |
| 131694 | 95-051 | LG 465 |
| 133346 | 95-051 | LG 465 |
| 134871 | 95-051 | LG 465 |
| 136969 | 95-036 | LG 463 |
| 137380 | 95-018 | LG 399 |
| 137646 | 85-017 | LG 907 |

X



* OREGON® Gator™ replacement blade

## SEARS

| OEM No. | OREGON | Page |
|---|---|---|
| 138406 | 33-331 | LG 730 |
| 138496 | 95-036 | LG 463 |
| 138969 | 95-036 | LG 463 |
| 140026 | 98-007 | LG 401 |
| 140403 | 33-099 | LG 946 |
| 141114 | 95-023 | LG 380 |
| 141416 | 15-700 | LG 259 |
| 143969 | 95-034 | LG 377 |
| 143978 | 95-031 | LG 377 |
| 143978X | 95-031 | LG 377 |
| 144200 | 75-026 | LG 307 |
| 144200 | 75-099 | LG 262 |
| 145106 | 95-044 | LG 465 |
| 145106 | 95-051 | LG 465 |
| 145708 | 95-045 | LG 374 |
| 145708 | 95-052 | LG 398 |
| 146154 | 33-331 | LG 730 |
| 146154 | 33-334 | LG 730 |
| 146749 | 95-044 | LG 465 |
| 152443 | 95-045 | LG 374 |
| 152443 | 95-052 | LG 398 |
| 1553H | 45-206 | LG 231 |
| 1554H | 45-205 | LG 228 |
| 156468 | 95-018 | LG 399 |
| 15703 | 95-045 | LG 374 |
| 15703 | 95-052 | LG 398 |
| 157033 | 95-052 | LG 398 |
| 157101 | 95-023 | LG 380 |
| 158913 | 33-397 | LG 942 |
| 159705 | 95-045 | LG 374 |
| 159705 | 95-052 | LG 398 |
| 1629J | 75-115 | LG 260 |
| 163819 | 95-045 | LG 374 |
| 163819 | 95-052 | LG 398 |
| 165555 | 15-704 | LG 311 |
| 165631 | 15-705 | LG 315 |
| 165833 | 95-057 | LG 380 |
| 169178 | 15-708 | LG 312 |
| 170140 | 15-711 | LG 259 |
| 170698 | 95-045 | LG 374 |
| 170698 | 95-052 | LG 398 |
| 173437 | 78-054 | LG 824 |
| 173901 | 78-053 | LG 824 |
| 175064 | 95-057 | LG 380 |
| 175820 | 78-052 | LG 824 |
| 176084 | 95-045 | LG 374 |
| 176084 | 95-052 | LG 398 |
| 179092 | 15-712 | LG 260 |
| 180767 | 72-014 | LG 1031 |
| 187284 | 78-051 | LG 824 |
| 189028 | 95-057 | LG 380 |
| 191723 | 75-810 | LG 257 |
| 192682 | 95-023 | LG 380 |
| 196857 | 15-020 | LG 291 |
| 197253 | 15-021 | LG 256 |
| 2008J | 33-331 | LG 730 |
| 21615 | 75-111 | LG 306 |
| 2228M1 | 02-535 | |
| 2295R | 75-179 | LG 310 |
| 23748 | 75-040 | LG 306 |
| 23749 | 75-022 | LG 307 |
| 24691 | 95-015 | LG 400 |
| 25034 | 95-014 | LG 374 |
| 25034R | 95-014 | LG 374 |
| 25036 | 95-015 | LG 400 |
| 25036R | 95-015 | LG 400 |
| 25322 | 95-011 | |
| 25322R | 95-011 | |
| 255W109 | 72-108 | LG 1031 |
| 255W347 | 72-437 | LG 1030 |
| 25744 | 95-041 | LG 401 |
| 2887J | 07-102 | LG 774 |
| 30727 | 30-070 | LG 216 |
| 31700 | 30-205 | LG 219 |
| 32972 | 30-091 | LG 217 |
| 33203 | 95-024 | LG 465 |
| 33204 | 95-024 | LG 465 |
| 33214 | 95-023 | LG 380 |
| 33219 | 95-023 | LG 380 |
| 33255 | 95-044 | LG 465 |
| 335256 | 95-023 | LG 380 |
| 3366R | 45-073 | LG 227 |
| 3483 | 35-010 | LG 809 |
| 35066 | 30-301 | LG 217 |
| 3570R | 80-036 | LG 727 |
| 3588R | 70-334 | LG 959 |
| 365410 | 42-008 | LG 945 |
| 36693 | 30-091 | LG 217 |
| 371979 | 07-102 | LG 774 |
| 372644 | 35-006 | LG 808 |
| 37X11 | 75-111 | LG 306 |
| 37X21 | 75-040 | LG 306 |
| 37X22 | 75-022 | LG 307 |
| 37X26 | 75-026 | LG 307 |
| 37X37 | 75-038 | LG 307 |
| 37X38 | 75-038 | LG 307 |
| 37X40 | 75-040 | LG 306 |
| 37X43 | 75-005 | LG 307 |
| 37X45 | 75-045 | LG 307 |
| 37X57 | 75-057 | LG 307 |
| 37X61 | 75-061 | LG 307 |
| 37X62 | 75-041 | LG 255 |
| 37X65 | 75-065 | LG 307 |
| 405143 | 15-022 | LG 292 |
| 406712 | 95-057 | LG 380 |
| 406713 | 95-023 | LG 380 |
| 42174 | 72-106 | LG 1029 |
| 429636 | 15-023 | LG 256 |
| 43066 | 75-168 | LG 310 |
| 43066MA | 75-168 | LG 310 |
| 4384H | 75-168 | LG 310 |
| 4552H | 80-036 | LG 727 |
| 48044 | 75-179 | LG 310 |
| 48044MA | 75-179 | LG 310 |
| 490-110-C119 | 98-093 | LG 411 |
| 4919H | 02-531 | |
| 4933H | 34-005 | LG 821 |
| 4949H | 02-195 | LG 676 |
| 4950H | 02-182 | LG 676 |
| 5091H | 75-208 | LG 277 |
| 532105455 | 72-306 | LG 1038 |
| 532106634 | 95-015 | LG 400 |
| 532121263 | 95-031 | LG 377 |
| 532-121263 | 95-015 | LG 400 |
| 532-121263 | 95-031 | LG 377 |
| 532130652 | 95-049 | LG 459 |
| 532141416 | 15-700 | LG 259 |
| 532143978 | 95-031 | LG 377 |
| 532165631 | 15-705 | LG 315 |
| 532170140 | 15-711 | LG 259 |
| 532196857 | 15-020 | LG 291 |
| 532197253 | 15-021 | LG 256 |
| 532405143 | 15-022 | LG 292 |
| 532406713 | 95-023 | LG 380 |
| 532429636 | 15-023 | LG 256 |
| 532752233 | 95-044 | LG 465 |
| 532850973 | 95-023 | LG 380 |
| 56400 | 95-024 | LG 465 |
| 56400R | 95-024 | LG 465 |
| 56401 | 95-023 | LG 380 |
| 59038 | 71-600 | LG 956 |
| 5913H | 42-008 | LG 945 |
| 618-0240 | 82-515 | LG 896 |
| 618-0240A | 82-515 | LG 896 |
| 618-0241 | 82-516 | LG 896 |
| 618-0430 | 82-515 | LG 896 |
| 618-0430A | 82-515 | LG 896 |
| 618-0430B | 82-515 | LG 896 |
| 618-0431 | 82-516 | LG 896 |
| 618-04822 | 82-058 | LG 898 |
| 618-04822A | 82-058 | LG 898 |
| 618-04889 | 82-058 | LG 898 |
| 618-04889A | 82-058 | LG 898 |
| 618-04950 | 82-058 | LG 898 |
| 618-0671 | 82-519 | LG 897 |
| 618-0671B | 82-519 | LG 897 |
| 62828 | 15-715 | LG 315 |
| 63087A | 30-301 | LG 217 |
| 63087A | 30-801 | LG 217 |
| 63087A | 69-034 | LG 217 |
| 6414H | 75-208 | LG 277 |
| 64744 | 75-208 | LG 277 |
| 6474H | 75-208 | LG 277 |
| 65053 | 02-531 | |
| 67344 | 32-107 | LG 676 |
| 67350 | 70-307 | LG 960 |
| 67412 | 32-107 | LG 676 |
| 67488 | 32-112 | LG 676 |
| 6774H | 75-208 | LG 277 |
| 677A14 | 82-677 | LG 903 |
| 677A181 | 82-677 | LG 903 |
| 677A233 | 82-677 | LG 903 |
| 677A880 | 33-331 | LG 730 |
| 691035 | 07-102 | LG 774 |
| 69229 | 95-024 | LG 465 |
| 69334 | 95-023 | LG 380 |
| 6944R | 75-168 | LG 310 |
| 701213 | 95-023 | LG 380 |
| 702245 | 72-456 | LG 1036 |
| 70652 | 32-107 | LG 676 |
| 71275 | 82-677 | LG 903 |
| 717-0900 | 82-501 | LG 894 |
| 717-0900A | 82-501 | LG 894 |
| 717-0906 | 82-500 | LG 893 |
| 717-0906A | 82-500 | LG 893 |
| 72818 | 32-107 | LG 676 |
| 7322H | 95-011 | |
| 734-0973 | 72-318 | LG 1042 |
| 734-973 | 72-318 | LG 1042 |
| 735-0639 | 75-108 | LG 289 |
| 73558 | 82-677 | LG 903 |
| 740297 | 40-402 | LG 589 |
| 740297MA | 40-402 | LG 589 |
| 742-04049 | 98-061 | LG 404 |
| 742-04154 | 98-094 | LG 514 |
| 742-04154A | 98-094 | LG 514 |
| 742-04308 | 98-093 | LG 411 |
| 742-04312 | 98-093 | LG 411 |
| 742-0477 | 98-487 | LG 513 |
| 742-0480 | 98-487 | LG 513 |
| 742-0487 | 98-487 | LG 513 |
| 742-0487A | 98-487 | LG 513 |
| 742-0499 | 98-499 | LG 519 |
| 742-0499A | 98-499 | LG 519 |
| 742-0536 | 98-007 | LG 401 |
| 742-0563 | 98-007 | LG 401 |
| 742-0612 | 98-061 | LG 404 |
| 742-0612A | 98-061 | LG 404 |
| 742-0642 | 98-050 | LG 521 |
| 742-0642A | 98-050 | LG 521 |
| 742-0656 | 98-093 | LG 411 |
| 742-0677 | 98-072 | LG 408 |
| 742-0677A | 98-072 | LG 408 |
| 742-0677B | 98-072 | LG 408 |
| 742-0721 | 98-007 | LG 401 |
| 742-0739 | 92-140 | LG 516 |
| 742-0740 | 98-066 | LG 409 |
| 742-0742 | 98-051 | LG 521 |
| 742-0742A | 98-051 | LG 521 |
| 742-0742A-0637 | 98-051 | LG 521 |
| 74977 | 15-716 | LG 315 |
| 752233 | 95-044 | LG 465 |
| 752233 | 95-051 | LG 465 |
| 753-05319 | 82-500 | LG 893 |
| 754-0101 | 75-148 | LG 300 |
| 754-0101A | 75-148 | LG 300 |
| 754-0131 | 75-365 | LG 862 |
| 754-0201 | 75-441 | LG 334 |
| 754-0241 | 75-012 | LG 301 |
| 754-0241A | 75-012 | LG 301 |
| 754-0280 | 75-002 | LG 301 |
| 754-0280A | 75-002 | LG 301 |
| 754-0281 | 75-281 | LG 301 |
| 754-0343 | 75-020 | LG 302 |
| 754-0355 | 75-023 | LG 302 |
| 754-0367 | 75-157 | LG 251 |
| 754-0369 | 75-027 | LG 302 |
| 754-0370 | 75-119 | LG 302 |
| 754-0371 | 75-028 | LG 302 |
| 754-0371A | 75-028 | LG 302 |
| 754-04032 | 75-249 | LG 305 |
| 754-04032B | 75-249 | LG 305 |
| 754-04050 | 115-219 | LG 305 |
| 754-04201 | 15-052 | LG 315 |
| 754-04219 | 15-027 | LG 306 |
| 754-04252 | 15-132 | LG 306 |
| 754-04259 | 15-133 | LG 306 |
| 754-04259A | 15-133 | LG 306 |
| 754-0430 | 75-158 | LG 251 |
| 754-0430A | 75-158 | LG 251 |
| 754-0430B | 75-158 | LG 251 |
| 754-0431 | 75-158 | LG 251 |
| 754-0434 | 75-999 | LG 253 |
| 754-0453 | 75-675 | LG 303 |
| 754-0465 | 75-249 | LG 305 |
| 754-0467 | 75-995 | LG 303 |
| 754-0467A | 75-995 | LG 303 |
| 754-0468 | 75-993 | LG 303 |
| 754-0472 | 75-361 | LG 254 |
| 754-0476 | 75-364 | LG 304 |
| 7552H | 42-008 | LG 945 |
| 76686 | 32-107 | LG 676 |
| 7754R | 33-331 | LG 730 |
| 7838R | 45-109 | LG 939 |
| 786108 | 48-148 | LG 695 |
| 8020 | 95-024 | LG 465 |
| 80204 | 95-024 | LG 465 |
| 8021 | 95-023 | LG 380 |
| 8029 | 95-024 | LG 465 |
| 8117J | 72-108 | LG 1031 |
| 8134H | 71-816 | LG 956 |
| 81771 | 32-112 | LG 676 |
| 81801 | 32-112 | LG 676 |
| 81834 | 32-107 | LG 676 |
| 81836 | 32-107 | LG 676 |
| 83059 | 49-170 | LG 758 |
| 8327X | 80-014 | LG 727 |
| 84352 | 75-208 | LG 277 |
| 850053 | 15-717 | LG 260 |
| 850972 | 95-024 | LG 465 |
| 850973 | 95-023 | LG 380 |
| 850977 | 65-006 | LG 340 |
| 8514R | 45-109 | LG 939 |
| 851514 | 65-007 | LG 342 |
| 85755MA | 40-402 | LG 589 |
| 85757 | 40-951 | LG 587 |
| 88074 | 15-718 | LG 259 |
| 9040H | 45-057 | LG 249 |
| 917-0900A | 82-501 | LG 894 |
| 917-0906A | 82-500 | LG 893 |
| 917532062828 | 15-715 | LG 315 |
| 917532141416 | 15-700 | LG 259 |
| 917532165631 | 15-705 | LG 315 |
| 917532170140 | 15-711 | LG 259 |
| 918-0240 | 82-515 | LG 896 |
| 918-0240A | 82-515 | LG 896 |
| 918-0240C | 82-515 | LG 896 |
| 918-0241 | 82-516 | LG 896 |
| 918-0241B | 82-516 | LG 896 |

X

* OREGON® Gator™ replacement blade

# 2019 OEM X-Reference

| OEM No. | OREGON | Page |
|---|---|---|
| **SEARS** | | |
| 918-0430 | 82-515 | LG 896 |
| 918-0430A | 82-515 | LG 896 |
| 918-0430B | 82-515 | LG 896 |
| 918-0430C | 82-515 | LG 896 |
| 918-0431 | 82-516 | LG 896 |
| 918-0431A | 82-516 | LG 896 |
| 918-0431B | 82-516 | LG 896 |
| 918-0431C | 82-516 | LG 896 |
| 918-04822 | 82-058 | LG 898 |
| 918-04822A | 82-058 | LG 898 |
| 918-04822B | 82-058 | LG 898 |
| 918-04889 | 82-058 | LG 898 |
| 918-04889A | 82-058 | LG 898 |
| 918-0671 | 82-519 | LG 897 |
| 918-0671B | 82-519 | LG 897 |
| 918-0671D | 82-519 | LG 897 |
| 9180R | 15-719 | LG 312 |
| 9396E | 80-014 | LG 727 |
| 942-04154 | 98-094 | LG 514 |
| 942-04154A | 98-094 | LG 514 |
| 942-04308 | 98-093 | LG 411 |
| 942-04312 | 98-093 | LG 411 |
| 942-0487A | 98-487 | LG 513 |
| 942-0612 | 98-061 | LG 404 |
| 942-0612A | 98-061 | LG 404 |
| 942-0642 | 98-050 | LG 521 |
| 942-0642A | 98-050 | LG 521 |
| 942-0656 | 98-093 | LG 411 |
| 942-0677 | 98-072 | LG 408 |
| 942-0677A | 98-072 | LG 408 |
| 942-0677B | 98-072 | LG 408 |
| 942-0721 | 98-007 | LG 401 |
| 942-0739 | 92-140 | LG 516 |
| 942-0740 | 98-066 | LG 409 |
| 942-0742 | 98-051 | LG 521 |
| 942-0742A | 98-051 | LG 521 |
| 9485H | 95-011 | |
| 9497R | 95-011 | |
| 954-0101A | 75-148 | LG 300 |
| 954-0131 | 75-365 | LG 862 |
| 954-0201 | 75-441 | LG 334 |
| 954-0241 | 75-012 | LG 301 |
| 954-0241A | 75-012 | LG 301 |
| 954-0280 | 75-002 | LG 301 |
| 954-0280A | 75-002 | LG 301 |
| 954-0281 | 75-281 | LG 301 |
| 954-0343 | 75-020 | LG 302 |
| 954-0355 | 75-023 | LG 302 |
| 954-0367 | 75-157 | LG 251 |
| 954-0369 | 75-027 | LG 302 |
| 954-0370 | 75-119 | LG 302 |
| 954-0371 | 75-028 | LG 302 |
| 954-0371A | 75-028 | LG 302 |
| 954-04032A | 75-249 | LG 305 |
| 954-04032B | 75-249 | LG 305 |
| 954-04050 | 115-219 | LG 305 |
| 954-04050A | 115-219 | LG 305 |
| 954-04201 | 15-052 | LG 315 |
| 954-04201A | 15-052 | LG 315 |
| 954-04219 | 15-027 | LG 306 |
| 954-04252 | 15-132 | LG 306 |
| 954-04259 | 15-133 | LG 306 |
| 954-04259A | 15-133 | LG 306 |
| 954-04265 | 15-100 | LG 306 |
| 954-0430 | 75-158 | LG 251 |
| 954-0430A | 75-158 | LG 251 |
| 954-0430B | 75-158 | LG 251 |
| 954-0431 | 75-158 | LG 251 |
| 954-0434 | 75-999 | LG 253 |
| 954-0453 | 75-675 | LG 303 |
| 954-0465 | 75-249 | LG 305 |
| 954-0467 | 75-995 | LG 303 |
| 954-0467A | 75-995 | LG 303 |
| 954-0468 | 75-993 | LG 303 |
| 954-0472 | 75-361 | LG 254 |
| 954-0476 | 75-364 | LG 304 |
| OCC-742-0739 | 92-140 | LG 516 |
| OEM-754-0101A | 75-148 | LG 300 |
| OEM-754-0369 | 75-027 | LG 302 |
| OEM-754-04032 | 75-249 | LG 305 |
| OEM-754-0453 | 75-675 | LG 303 |
| PP22055 | 95-044 | LG 465 |
| STD315653 | 45-205 | LG 228 |
| STD315663 | 45-206 | LG 231 |
| STD316414 | 32-107 | LG 676 |
| STD316653 | 32-112 | LG 676 |
| STD324830 | 75-115 | LG 260 |
| STD324990 | 75-022 | LG 307 |
| STD325840 | 75-179 | LG 310 |
| STD333760 | 72-106 | LG 1029 |
| STD365410 | 42-008 | LG 945 |
| STD580019 | 02-531 | |
| STD580025 | 02-535 | |
| STD580111 | 80-014 | LG 727 |
| TH5H710 | 75-168 | LG 310 |
| **SENSATION MOWER INC.** | | |
| 083-106 | 72-746 | LG 1032 |
| 083-107 | 72-747 | LG 1036 |
| **SENTRY HARDWARE** | | |
| 754-0145 | 75-145 | LG 300 |
| 754-0151 | 75-004 | LG 301 |
| 754-0178 | 75-179 | LG 310 |
| 754-0201 | 75-441 | LG 334 |
| 754-0234 | 75-441 | LG 334 |
| 754-0935 | 75-092 | LG 304 |
| 954-0145 | 75-145 | LG 300 |
| 954-0145A | 75-145 | LG 300 |
| 954-0151 | 75-004 | LG 301 |
| 954-015A | 75-145 | LG 300 |
| 954-0178 | 75-179 | LG 310 |
| 954-0201 | 75-441 | LG 334 |
| 954-0234 | 75-441 | LG 334 |
| 954-0935 | 75-092 | LG 304 |
| **SERVICE MERCHANDISE** | | |
| 754-0201 | 75-441 | LG 334 |
| 754-0234 | 75-441 | LG 334 |
| 754-0935 | 75-092 | LG 304 |
| 954-0201 | 75-441 | LG 334 |
| 954-0234 | 75-441 | LG 334 |
| 954-0935 | 75-092 | LG 304 |
| **SERVISTAR** | | |
| 754-0145 | 75-145 | LG 300 |
| 754-0151 | 75-004 | LG 301 |
| 754-0201 | 75-441 | LG 334 |
| 754-0234 | 75-441 | LG 334 |
| 754-0935 | 75-092 | LG 304 |
| 954-0145 | 75-145 | LG 300 |
| 954-0145A | 75-145 | LG 300 |
| 954-0151 | 75-004 | LG 301 |
| 954-015A | 75-145 | LG 300 |
| 954-0201 | 75-441 | LG 334 |
| 954-0234 | 75-441 | LG 334 |
| 954-0935 | 75-092 | LG 304 |
| **SHINDAIWA** | | |
| 1082 | 55-231 | LG 212 |
| 200000-85200 | 55-097 | LG 772 |
| 2000051103 | 55-121 | LG 1024 |
| 20000-51103 | 55-121 | LG 1024 |
| 2000051104 | 55-121 | LG 1024 |
| 20000-51104 | 55-121 | LG 1024 |
| 20000-75140 | 43-685 | LG 936 |
| 2000081740 | 55-231 | LG 212 |
| 20000-81740 | 55-231 | LG 212 |
| 20000-81740S | 55-231 | LG 212 |
| 20000-85200 | 55-097 | LG 772 |
| 20000-85303 | 55-139 | LG 763 |
| 20010-72221 | 33-516 | LG 866 |
| 2001131200 | 57-050 | LG 1024 |
| 20011-31200 | 57-050 | LG 1024 |
| 20011-854 | 07-011 | LG 763 |
| 2001185400 | 07-011 | LG 763 |
| 2001185400 | 55-112 | LG 778 |
| 20011-85400 | 55-112 | LG 778 |
| 2001185401 | 07-011 | LG 763 |
| 2001185401 | 55-112 | LG 778 |
| 20011-8545 | 07-011 | LG 763 |
| 20011-85450 | 07-011 | LG 763 |
| 2001185451 | 07-011 | LG 763 |
| 2001185451 | 55-112 | LG 778 |
| 20011-85451 | 07-011 | LG 763 |
| 2001185459 | 07-011 | LG 763 |
| 2001185459 | 55-112 | LG 778 |
| 20011-85459 | 07-011 | LG 763 |
| 2001851100 | 55-121 | LG 1024 |
| 20018-51100 | 55-121 | LG 1024 |
| 2001851101 | 55-121 | LG 1024 |
| 2002151101 | 57-050 | LG 1024 |
| 20021-51101 | 57-050 | LG 1024 |
| 2002151102 | 57-050 | LG 1024 |
| 20021-51102 | 57-050 | LG 1024 |
| 2002161101 | 57-050 | LG 1024 |
| 20021-61101 | 57-050 | LG 1024 |
| 200355100 | 55-253 | LG 1024 |
| 20035-5100 | 55-253 | LG 1024 |
| 2003551100 | 55-253 | LG 1024 |
| 2003551101 | 55-253 | LG 1024 |
| 20035-51101 | 55-253 | LG 1024 |
| 20035-81700 | 55-231 | LG 212 |
| 20036-81670 | 49-026 | LG 769 |
| 22100-81310 | 49-021 | LG 629 |
| 22102-72220 | 33-516 | LG 866 |
| 28820-07340 | 55-336 | LG 986 |
| 309891 | 55-231 | LG 212 |
| 3801082581 | 30-719 | LG 212 |
| 38010-82581 | 30-719 | LG 212 |
| 4114-124-0800 | 55-231 | LG 212 |
| 6002398031 | 30-721 | LG 213 |
| 60023-98031 | 30-721 | LG 213 |
| 69601552630 | 40-141 | LG 585 |
| 69601552631 | 40-141 | LG 585 |
| 69601552632 | 40-141 | LG 585 |
| 70029-81480 | 49-020 | LG 631 |
| 70030-81380 | 55-342 | LG 627 |
| 7006482210 | 55-510 | LG 212 |
| 70064-82210 | 55-510 | LG 212 |
| 7014051100 | 55-253 | LG 1024 |
| 7014051101 | 55-121 | LG 1024 |
| 7014051102 | 55-121 | LG 1024 |
| 7014051102 | 55-253 | LG 1024 |
| 70140-51102 | 55-121 | LG 1024 |
| 70140-51102 | 55-253 | LG 1024 |
| 717916 | 43-685 | LG 936 |
| 72078-15240 | 55-804-1 | LG 994 |
| 72078-15280 | 55-807 | LG 994 |
| 78890-18001 | 55-294 | LG 986 |
| 78890-21001 | 55-265 | LG 986 |
| 99909-0020 | 40-141 | LG 585 |
| 99909-105 | 49-829 | LG 605 |
| 99909-125 | 49-827 | LG 608 |
| 99909-15580 | 55-355-1 | LG 994 |
| 99909-49 | 55-343 | LG 627 |
| A056000260 | 55-121 | LG 1024 |
| A056000260 | 55-253 | LG 1024 |
| A056000500 | 55-121 | LG 1024 |
| A226000590 | 55-510 | LG 212 |
| A226000670 | 55-231 | LG 212 |
| A226001270 | 30-719 | LG 212 |
| V470001110 | 07-011 | LG 763 |
| **SIERRA** | | |
| 7-01641 | 33-340 | LG 784 |
| 7-01643 | 33-344 | LG 784 |
| 7-02025 | 49-078 | LG 603 |
| 7-02045 | 49-102 | LG 602 |
| 7-02210 | 30-044 | LG 179 |
| 7-02228 | 30-101 | LG 179 |
| 7-02238 | 30-400 | LG 193 |
| 7-02239 | 30-094 | LG 180 |
| 7-02240 | 30-104 | LG 180 |
| 7-02249 | 30-405 | LG 193 |
| 7-02257 | 30-710 | LG 181 |
| 7-02265 | 30-107 | LG 180 |
| 7-02275 | 30-923 | LG 186 |
| 7-02278 | 30-920 | LG 186 |
| 7-02282 | 30-929 | LG 187 |
| 7-02283 | 30-924 | LG 186 |
| 7-02286 | 30-927 | LG 187 |
| 7-02708 | 30-401 | LG 193 |
| 7-02742 | 30-049 | LG 181 |
| 7-03651 | 35-001 | LG 806 |
| 7-03664 | 35-005 | LG 806 |
| 7-03670 | 35-026 | LG 807 |
| 7-07103 | 07-101 | LG 775 |
| 7-07175 | 30-925 | LG 187 |
| 7-07183 | 30-318 | LG 193 |
| 7-08306 | 30-709 | LG 194 |
| **SIMPLICITY** | | |
| 101096 | 34-044 | LG 821 |
| 108202 | 45-295 | LG 232 |
| 108202SM | 45-295 | LG 232 |
| 108386 | 34-015 | LG 821 |
| 108505 | 75-218 | LG 316 |
| 108508 | 75-372 | LG 316 |
| 108508SM | 75-372 | LG 316 |
| 117414 | 34-001 | LG 821 |
| 118011 | 45-259 | LG 224 |
| 118414 | 34-002 | LG 821 |
| 11913 | 599-133* | LG 422 |
| 11913 | 96-133* | LG 422 |
| 11914 | 599-133* | LG 422 |
| 11914 | 96-133* | LG 422 |
| 11949 | 599-133* | LG 422 |
| 11949 | 96-133* | LG 422 |
| 154393 | 45-206 | LG 231 |
| 154486 | 45-205 | LG 228 |
| 154534 | 34-009 | LG 821 |
| 156124 | 34-009 | LG 821 |
| 156316 | 45-003 | LG 244 |
| 156316SM | 45-003 | LG 244 |
| 1601520 | 75-218 | LG 316 |
| 1603515 | 34-009 | LG 821 |
| 1610191 | 34-009 | LG 821 |
| 163011 | 15-735 | LG 316 |
| 1636451 | 91-713 | LG 422 |
| 1636451SM | 91-713 | LG 422 |
| 164268 | 34-017 | LG 821 |
| 1650954 | 83-300 | LG 819 |
| 1650954SM | 83-300 | LG 819 |
| 165147A | 92-146 | LG 539 |
| 165147ASM | 92-146 | LG 539 |
| 165147SM | 92-146 | LG 539 |
| 1652231 | 45-259 | LG 224 |
| 1653975 | 91-713 | LG 422 |
| 1654930 | 07-392 | LG 767 |
| 1654930SM | 07-392 | LG 767 |
| 1656043 | 91-713 | LG 422 |
| 1656146 | 91-715 | LG 541 |
| 1656146A | 91-715 | LG 541 |
| 1656146ASM | 91-715 | LG 541 |
| 1656146SM | 91-715 | LG 541 |
| 1656147 | 92-146 | LG 539 |
| 1656147A | 92-146 | LG 539 |
| 1656147ASM | 92-146 | LG 539 |

X



* OREGON® Gator™ replacement blade

| OEM No. | OREGON | Page |
|---|---|---|
| **SIMPLICITY** | | |
| 1656147SM | 92-146 | LG 539 |
| 1656149A | 91-715 | LG 541 |
| 1657044 | 15-724 | LG 316 |
| 1657044-2 | 15-724 | LG 316 |
| 1657044SM | 15-724 | LG 316 |
| 1657589 | 91-713 | LG 422 |
| 1657589A | 91-713 | LG 422 |
| 1657589ASM | 91-713 | LG 422 |
| 1657589SM | 91-713 | LG 422 |
| 1657827 | 34-003 | LG 821 |
| 1659916A | 91-703 | LG 541 |
| 1659916ASM | 91-703 | LG 541 |
| 1659916BMA | 91-703 | LG 541 |
| 1659916BZ | 91-703 | LG 541 |
| 1659916SM | 91-703 | LG 541 |
| 166 | 33-024 | LG 945 |
| 1663885 | 75-066 | LG 251 |
| 1663885SM | 75-066 | LG 251 |
| 1665521 | 45-242 | LG 243 |
| 1665521SM | 45-242 | LG 243 |
| 1665638 | 15-731 | LG 316 |
| 1665638SM | 15-731 | LG 316 |
| 1666292 | 45-257 | LG 245 |
| 1666292-6 | 45-257 | LG 245 |
| 1666292SM | 45-257 | LG 245 |
| 1666698 | 15-733 | LG 316 |
| 1666698SM | 15-733 | LG 316 |
| 1668066 | 75-371 | LG 316 |
| 1668066SM | 75-371 | LG 316 |
| 1668477 | 34-006 | LG 821 |
| 1668477SM | 34-006 | LG 821 |
| 1669804 | 33-024 | LG 945 |
| 1670835 | 15-729 | LG 316 |
| 1670835SM | 15-729 | LG 316 |
| 1671593 | 91-714 | LG 543 |
| 1671593A | 91-714 | LG 543 |
| 1671593ASM | 91-714 | LG 543 |
| 1671593SM | 91-714 | LG 543 |
| 1671994 | 33-330 | LG 729 |
| 1671994SM | 33-330 | LG 729 |
| 1675800 | 33-384 | LG 947 |
| 1675800SM | 33-384 | LG 947 |
| 16771993 | 33-334 | LG 730 |
| 1679916 | 91-703 | LG 541 |
| 1679916A | 91-703 | LG 541 |
| 1679916ASM | 91-703 | LG 541 |
| 1679916BZYP | 91-703 | LG 541 |
| 1679916SM | 91-703 | LG 541 |
| 1685144SM | 34-009 | LG 821 |
| 1685144SM | 34-017 | LG 821 |
| 1685151 | 34-023 | LG 822 |
| 1685290 | 33-334 | LG 730 |
| 1685290 | 33-335 | LG 730 |
| 1685290 | 33-336 | LG 730 |
| 1685290SM | 33-334 | LG 730 |
| 1685290SM | 33-335 | LG 730 |
| 1685290SM | 33-336 | LG 730 |
| 1685291 | 33-334 | LG 730 |
| 1685291 | 33-335 | LG 730 |
| 1685291 | 33-336 | LG 730 |
| 1685291SM | 33-334 | LG 730 |
| 1685291SM | 33-335 | LG 730 |
| 1685291SM | 33-336 | LG 730 |
| 16852980 | 33-334 | LG 730 |
| 1686637 | 33-397 | LG 942 |
| 1686637SM | 33-397 | LG 942 |
| 1686882SM | 33-111 | LG 735 |
| 1686981 | 33-330 | LG 729 |
| 1686981 | 33-334 | LG 730 |
| 1686981 | 33-335 | LG 730 |
| 1686981 | 33-336 | LG 730 |
| 1686981SM | 33-330 | LG 729 |
| 1686981SM | 33-334 | LG 730 |
| 1686981SM | 33-335 | LG 730 |
| 1686981SM | 33-336 | LG 730 |
| 1686981YP | 33-334 | LG 730 |
| 1686982 | 33-330 | LG 729 |
| 1686982SM | 33-330 | LG 729 |
| 1687016 | 91-615 | LG 522 |
| 1687016SM | 91-615 | LG 522 |
| 1687017 | 91-616 | LG 543 |
| 1687017 | 96-398* | LG 525 |
| 1687017SM | 91-616 | LG 543 |
| 1687017SM | 96-398* | LG 525 |
| 170051 | 33-334 | LG 730 |
| 1700751 | 33-334 | LG 730 |
| 1700751 | 33-335 | LG 730 |
| 1700751 | 33-336 | LG 730 |
| 1700751SM | 33-334 | LG 730 |
| 1700751SM | 33-335 | LG 730 |
| 1700751SM | 33-336 | LG 730 |
| 17027774 | 590-685* | LG 540 |
| 17027774 | 90-685* | LG 540 |
| 17027774 | 91-705 | LG 540 |
| 17027774SM | 590-685* | LG 540 |
| 17027774SM | 90-685* | LG 540 |
| 17027774SM | 91-705 | LG 540 |
| 1703466 | 15-731 | LG 316 |
| 1703466SM | 15-731 | LG 316 |
| 1703836 | 15-732 | LG 316 |
| 1704100 | 590-685* | LG 540 |
| 1704100 | 90-685* | LG 540 |
| 1704100 | 91-705 | LG 540 |
| 1704100A | 590-685* | LG 540 |
| 1704100A | 90-685* | LG 540 |
| 1704100A | 91-705 | LG 540 |
| 1704100ASM | 590-685* | LG 540 |
| 1704100ASM | 90-685* | LG 540 |
| 1704100ASM | 91-705 | LG 540 |
| 1704100BMA | 590-685* | LG 540 |
| 1704100BMA | 90-685* | LG 540 |
| 1704100BMA | 91-705 | LG 540 |
| 1704100BZ | 590-685* | LG 540 |
| 1704100BZ | 90-685* | LG 540 |
| 1704100BZ | 91-705 | LG 540 |
| 1704100SM | 590-685* | LG 540 |
| 1704100SM | 90-685* | LG 540 |
| 1704100SM | 91-705 | LG 540 |
| 1704101 | 91-701 | LG 545 |
| 1704101 | 96-654* | LG 511 |
| 1704101A | 91-701 | LG 545 |
| 1704101A | 96-654* | LG 511 |
| 1704101ASM | 91-701 | LG 545 |
| 1704101ASM | 96-654* | LG 511 |
| 1704101BM | 91-701 | LG 545 |
| 1704101BM | 96-654* | LG 511 |
| 1704101BMA | 91-701 | LG 545 |
| 1704101BMA | 96-654* | LG 511 |
| 1704101BZ | 91-701 | LG 545 |
| 1704101BZ | 96-654* | LG 511 |
| 1704101SM | 91-701 | LG 545 |
| 1704101SM | 96-654* | LG 511 |
| 1704856 | 590-685* | LG 540 |
| 1704856 | 90-685* | LG 540 |
| 1704856 | 91-723 | LG 508 |
| 1704856A | 590-685* | LG 540 |
| 1704856A | 90-685* | LG 540 |
| 1704856A | 91-723 | LG 508 |
| 1704856ASM | 590-685* | LG 540 |
| 1704856ASM | 90-685* | LG 540 |
| 1704856ASM | 91-723 | LG 508 |
| 1704856BMA | 590-685* | LG 540 |
| 1704856BMA | 90-685* | LG 540 |
| 1704856BMA | 91-723 | LG 508 |
| 1704856BZ | 590-685* | LG 540 |
| 1704856BZ | 90-685* | LG 540 |
| 1704856BZ | 91-723 | LG 508 |
| 1704856SM | 590-685* | LG 540 |
| 1704856SM | 90-685* | LG 540 |
| 1704856SM | 91-723 | LG 508 |
| 1705897 | 45-257 | LG 245 |
| 1705897SM | 45-257 | LG 245 |
| 1708229 | 390-698* | LG 542 |
| 1708229 | 590-698* | LG 510 |
| 1708229 | 90-698* | LG 510 |
| 1708229 | 91-706 | LG 550 |
| 1708229A | 390-698* | LG 542 |
| 1708229A | 590-698* | LG 510 |
| 1708229A | 90-698* | LG 510 |
| 1708229A | 91-706 | LG 550 |
| 1708229ASM | 390-698* | LG 542 |
| 1708229ASM | 590-698* | LG 510 |
| 1708229ASM | 90-698* | LG 510 |
| 1708229ASM | 91-706 | LG 550 |
| 1708229BMA | 390-698* | LG 542 |
| 1708229BMA | 590-698* | LG 510 |
| 1708229BMA | 90-698* | LG 510 |
| 1708229BMA | 91-706 | LG 550 |
| 1708229BZ | 390-698* | LG 542 |
| 1708229BZ | 590-698* | LG 510 |
| 1708229BZ | 90-698* | LG 510 |
| 1708229BZ | 91-706 | LG 550 |
| 1708229SM | 390-698* | LG 542 |
| 1708229SM | 590-698* | LG 510 |
| 1708229SM | 90-698* | LG 510 |
| 1708229SM | 91-706 | LG 550 |
| 1708536 | 33-111 | LG 735 |
| 1708536SM | 33-111 | LG 735 |
| 1708536YP | 33-111 | LG 735 |
| 1709906 | 07-392 | LG 767 |
| 1713515 | 75-372 | LG 316 |
| 1713515SM | 75-372 | LG 316 |
| 1713549 | 75-218 | LG 316 |
| 1713549SM | 75-218 | LG 316 |
| 171439 | 83-300 | LG 819 |
| 1714519 | 73-008 | LG 848 |
| 1716606SM | 73-008 | LG 848 |
| 1716695 | 91-701 | LG 545 |
| 1716695 | 96-654* | LG 511 |
| 1716695A | 91-701 | LG 545 |
| 1716695A | 96-654* | LG 511 |
| 1716695ASM | 91-701 | LG 545 |
| 1716695ASM | 96-654* | LG 511 |
| 1716695SM | 91-701 | LG 545 |
| 1716695SM | 96-654* | LG 511 |
| 1716696 | 590-685* | LG 540 |
| 1716696 | 90-685* | LG 540 |
| 1716696 | 91-705 | LG 540 |
| 1716696A | 590-685* | LG 540 |
| 1716696A | 90-685* | LG 540 |
| 1716696A | 91-705 | LG 540 |
| 1716696ASM | 590-685* | LG 540 |
| 1716696ASM | 90-685* | LG 540 |
| 1716696ASM | 91-705 | LG 540 |
| 1716696SM | 590-685* | LG 540 |
| 1716696SM | 90-685* | LG 540 |
| 1716696SM | 91-705 | LG 540 |
| 1716697 | 390-698* | LG 542 |
| 1716697 | 590-698* | LG 510 |
| 1716697 | 90-698* | LG 510 |
| 1716697 | 91-706 | LG 550 |
| 1716697A | 390-698* | LG 542 |
| 1716697A | 590-698* | LG 510 |
| 1716697A | 90-698* | LG 510 |
| 1716697A | 91-706 | LG 550 |
| 1716697ASM | 390-698* | LG 542 |
| 1716697ASM | 590-698* | LG 510 |
| 1716697ASM | 90-698* | LG 510 |
| 1716697ASM | 91-706 | LG 550 |
| 1716697BMA | 390-698* | LG 542 |
| 1716697BMA | 590-698* | LG 510 |
| 1716697BMA | 90-698* | LG 510 |
| 1716697BMA | 91-706 | LG 550 |
| 1716697BZ | 390-698* | LG 542 |
| 1716697BZ | 590-698* | LG 510 |
| 1716697BZ | 90-698* | LG 510 |
| 1716697BZ | 91-706 | LG 550 |
| 1716697SM | 390-698* | LG 542 |
| 1716697SM | 590-698* | LG 510 |
| 1716697SM | 90-698* | LG 510 |
| 1716697SM | 91-706 | LG 550 |
| 171669A | 91-705 | LG 540 |
| 1716854 | 15-733 | LG 316 |
| 1716854SM | 15-733 | LG 316 |
| 1718017 | 15-734 | LG 316 |
| 1718017SM | 15-734 | LG 316 |
| 1721086 | 390-698* | LG 542 |
| 1721086 | 590-698* | LG 510 |
| 1721086 | 90-698* | LG 510 |
| 1721086A | 390-698* | LG 542 |
| 1721086A | 590-698* | LG 510 |
| 1721086A | 90-698* | LG 510 |
| 1721086ASM | 390-698* | LG 542 |
| 1721086ASM | 590-698* | LG 510 |
| 1721086ASM | 90-698* | LG 510 |
| 1722039SM | 15-735 | LG 316 |
| 1722090 | 91-615 | LG 522 |
| 1725921 | 96-398* | LG 525 |
| 1725921A | 96-398* | LG 525 |
| 1725921ASM | 96-398* | LG 525 |
| 1725921SM | 96-398* | LG 525 |
| 1726357 | 91-706 | LG 550 |
| 1726357SM | 91-706 | LG 550 |
| 1726453 | 390-698* | LG 542 |
| 1726453 | 590-698* | LG 510 |
| 1726453 | 90-698* | LG 510 |
| 1726453 | 91-706 | LG 550 |
| 1726453A | 390-698* | LG 542 |
| 1726453A | 590-698* | LG 510 |
| 1726453A | 90-698* | LG 510 |
| 1726453A | 91-706 | LG 550 |
| 1726453ASM | 390-698* | LG 542 |
| 1726453ASM | 590-698* | LG 510 |
| 1726453ASM | 90-698* | LG 510 |
| 1726453ASM | 91-706 | LG 550 |
| 1726453BMA | 390-698* | LG 542 |
| 1726453BMA | 590-698* | LG 510 |
| 1726453BMA | 90-698* | LG 510 |
| 1726453BMA | 91-706 | LG 550 |
| 1726453BZ | 390-698* | LG 542 |
| 1726453BZ | 590-698* | LG 510 |
| 1726453BZ | 90-698* | LG 510 |
| 1726453BZ | 91-706 | LG 550 |
| 1726453BZYP | 390-698* | LG 542 |
| 1726453BZYP | 590-698* | LG 510 |
| 1726453BZYP | 90-698* | LG 510 |
| 1726453BZYP | 91-706 | LG 550 |
| 1726453SM | 390-698* | LG 542 |
| 1726453SM | 590-698* | LG 510 |
| 1726453SM | 90-698* | LG 510 |
| 1726453SM | 91-706 | LG 550 |
| 1727773SM | 75-218 | LG 316 |
| 1727774 | 590-685* | LG 540 |
| 1727774 | 90-685* | LG 540 |
| 1727774 | 91-705 | LG 540 |
| 1727774A | 590-685* | LG 540 |
| 1727774A | 90-685* | LG 540 |
| 1727774A | 91-705 | LG 540 |
| 1727774ASM | 590-685* | LG 540 |
| 1727774ASM | 90-685* | LG 540 |
| 1727774ASM | 91-705 | LG 540 |
| 1727774BMA | 590-685* | LG 540 |
| 1727774BMA | 90-685* | LG 540 |
| 1727774BMA | 91-705 | LG 540 |
| 1727774BZ | 590-685* | LG 540 |
| 1727774BZ | 90-685* | LG 540 |
| 1727774BZ | 91-705 | LG 540 |
| 1727774SM | 590-685* | LG 540 |
| 1727774SM | 90-685* | LG 540 |

X

# 2019 OEM X-Reference

| OEM No. | OREGON | Page |
|---|---|---|
| **SIMPLICITY** | | |
| 1727774SM | 91-705 | LG 540 |
| 1731898 | 391-610* | LG 554 |
| 1731898 | 91-610 | LG 554 |
| 1731898A | 391-610* | LG 554 |
| 1731898A | 91-610 | LG 554 |
| 1731898ASM | 391-610* | LG 554 |
| 1731898ASM | 91-610 | LG 554 |
| 1731898BMA | 391-610* | LG 554 |
| 1731898BMA | 91-610 | LG 554 |
| 1731898BZ | 391-610* | LG 554 |
| 1731898BZ | 91-610 | LG 554 |
| 1731898BZYP | 391-610* | LG 554 |
| 1731898BZYP | 91-610 | LG 554 |
| 1736043 | 91-616 | LG 543 |
| 1736043 | 96-398* | LG 525 |
| 1736043A | 91-616 | LG 543 |
| 1736043A | 96-398* | LG 525 |
| 1736043AYP | 91-616 | LG 543 |
| 1736043AYP | 96-398* | LG 525 |
| 1736043BM | 91-616 | LG 543 |
| 1736043BM | 96-398* | LG 525 |
| 1736043BMA | 91-616 | LG 543 |
| 1736043BMA | 96-398* | LG 525 |
| 1736043BMA | 96-398* | LG 525 |
| 1736043BMYP | 91-616 | LG 543 |
| 1736043BMYP | 96-398* | LG 525 |
| 1736043BZ | 91-616 | LG 543 |
| 1736043BZ | 96-398* | LG 525 |
| 1737228 | 599-132* | LG 522 |
| 1737228 | 99-132 | LG 539 |
| 1737228A | 599-132* | LG 522 |
| 1737228A | 99-132 | LG 539 |
| 1737228AYP | 599-132* | LG 522 |
| 1737228AYP | 99-132 | LG 539 |
| 1737228BM | 599-132* | LG 522 |
| 1737228BM | 99-132 | LG 539 |
| 1737228BMA | 599-132* | LG 522 |
| 1737228BMA | 99-132 | LG 539 |
| 1737228BZ | 599-132* | LG 522 |
| 1737228BZ | 99-132 | LG 539 |
| 1737228BZYP | 599-132* | LG 522 |
| 1737228BZYP | 99-132 | LG 539 |
| 1737228SM | 599-132* | LG 522 |
| 1737228SM | 99-132 | LG 539 |
| 1737228YP | 599-132* | LG 522 |
| 1737228YP | 99-132 | LG 539 |
| 1737252 | 599-133* | LG 422 |
| 1737252 | 96-133* | LG 422 |
| 1737252 | 99-133 | LG 542 |
| 1737252A | 599-133* | LG 422 |
| 1737252A | 96-133* | LG 422 |
| 1737252A | 99-133 | LG 542 |
| 1737252AYP | 599-133* | LG 422 |
| 1737252AYP | 96-133* | LG 422 |
| 1737252AYP | 99-133 | LG 542 |
| 1737252BM | 599-133* | LG 422 |
| 1737252BM | 96-133* | LG 422 |
| 1737252BM | 99-133 | LG 542 |
| 1737252BMA | 599-133* | LG 422 |
| 1737252BMA | 96-133* | LG 422 |
| 1737252BMA | 99-133 | LG 542 |
| 1737252BZ | 599-133* | LG 422 |
| 1737252BZ | 96-133* | LG 422 |
| 1737252BZ | 99-133 | LG 542 |
| 1737252BZYP | 599-133* | LG 422 |
| 1737252BZYP | 96-133* | LG 422 |
| 1737252BZYP | 99-133 | LG 542 |
| 1737252SM | 599-133* | LG 422 |
| 1737252SM | 96-133* | LG 422 |
| 1737252SM | 99-133 | LG 542 |
| 1737252YP | 599-133* | LG 422 |
| 1737252YP | 96-133* | LG 422 |
| 1737252YP | 99-133 | LG 542 |
| 1737816 | 391-605* | LG 544 |
| 1737816 | 91-605 | LG 544 |
| 1737816BM | 391-605* | LG 544 |
| 1737816BM | 91-605 | LG 544 |
| 1737816BMA | 391-605* | LG 544 |
| 1737816BMA | 91-605 | LG 544 |
| 1737816BMYP | 391-605* | LG 544 |
| 1737816BMYP | 91-605 | LG 544 |
| 1737816BZ | 391-605* | LG 544 |
| 1737816BZ | 91-605 | LG 544 |
| 1737816SM | 391-605* | LG 544 |
| 1737816SM | 91-605 | LG 544 |
| 1737816YP | 391-605* | LG 544 |
| 1737816YP | 91-605 | LG 544 |
| 1739889 | 599-132* | LG 522 |
| 1739889A | 599-132* | LG 522 |
| 1739889AYP | 599-132* | LG 522 |
| 1739889BM | 599-132* | LG 522 |
| 1739889BMA | 599-132* | LG 522 |
| 1756152AYP | 396-726* | LG 391 |
| 1756152AYP | 596-344* | LG 495 |
| 1756152AYP | 91-256 | LG 437 |
| 1756152AYP | 96-344* | LG 536 |
| 1756152SYP | 396-726* | LG 391 |
| 1756152SYP | 596-344* | LG 495 |
| 1756152SYP | 91-256 | LG 437 |
| 1756152SYP | 96-344* | LG 536 |
| 1757303YP | 391-606* | LG 547 |
| 1757303YP | 91-606 | LG 509 |
| 1758878BMYP | 391-607* | LG 511 |
| 1758878BMYP | 91-607 | LG 544 |
| 1759055YP | 391-614* | LG 548 |
| 177954 | 75-218 | LG 316 |
| 178280 | 33-386 | LG 942 |
| 179889BZ | 599-132* | LG 522 |
| 2026320 | 34-044 | LG 821 |
| 2101096SM | 34-044 | LG 821 |
| 2108202 | 45-295 | LG 232 |
| 2108202SM | 45-295 | LG 232 |
| 2108386SM | 34-015 | LG 821 |
| 2108508 | 75-372 | LG 316 |
| 2118414SM | 34-002 | LG 821 |
| 2154258SM | 45-295 | LG 232 |
| 2154393SM | 45-206 | LG 231 |
| 2154486SM | 45-205 | LG 228 |
| 2154534SM | 34-023 | LG 822 |
| 2156124SM | 34-009 | LG 821 |
| 2156316 | 45-003 | LG 244 |
| 2156316SM | 45-003 | LG 244 |
| 2171439 | 83-300 | LG 819 |
| 2178280SM | 33-386 | LG 942 |
| 5022808ASM | 396-727* | LG 467 |
| 5022808ASM | 596-347* | LG 448 |
| 5022808ASM | 91-626 | LG 552 |
| 5022808ASM | 96-347* | LG 387 |
| 5101756S | 396-726* | LG 391 |
| 5101756S | 596-344* | LG 495 |
| 5101756S | 91-312 | LG 478 |
| 5101756S | 96-344* | LG 536 |
| 5101756SYP | 396-726* | LG 391 |
| 5101756SYP | 596-344* | LG 495 |
| 5101756SYP | 91-312 | LG 478 |
| 5101756SYP | 96-344* | LG 536 |
| 5101986S | 396-716* | LG 451 |
| 5101986S | 596-310* | LG 447 |
| 5101986S | 91-313 | LG 494 |
| 5101986S | 96-310* | LG 444 |
| 5101986SYP | 396-716* | LG 451 |
| 5101986SYP | 596-310* | LG 447 |
| 5101986SYP | 91-313 | LG 494 |
| 5101986SYP | 96-310* | LG 444 |
| 5102227S | 396-731* | LG 427 |
| 5102227SYP | 396-731* | LG 427 |
| 5103304SYP | 396-726* | LG 391 |
| 5103304SYP | 596-344* | LG 495 |
| 5103304SYP | 91-335 | LG 420 |
| 5103304SYP | 96-344* | LG 536 |
| 5104045SYP | 396-727* | LG 467 |
| 5104045SYP | 596-347* | LG 448 |
| 5104045SYP | 91-308 | LG 467 |
| 5104045SYP | 96-347* | LG 387 |
| 536986 | 45-295 | LG 232 |
| 539118672 | 599-133* | LG 422 |
| 539118672 | 96-133* | LG 422 |
| 539118673 | 599-133* | LG 422 |
| 539118673 | 96-133* | LG 422 |
| 668827 | 34-034 | LG 821 |
| 7035948SM | 73-823 | LG 849 |
| 7100851A | 99-134 | LG 527 |
| 7100851AYP | 99-134 | LG 527 |
| 7100851BM | 99-134 | LG 527 |
| 7100851BMYP | 99-134 | LG 527 |
| 7100851BZ | 99-134 | LG 527 |
| 71601520 | 75-218 | LG 316 |
| 71654930 | 07-392 | LG 767 |
| 71656147 | 92-146 | LG 539 |
| 71657044 | 15-724 | LG 316 |
| 71657589 | 91-713 | LG 422 |
| 71663885 | 75-066 | LG 251 |
| 71665521 | 45-242 | LG 243 |
| 71666292 | 45-257 | LG 245 |
| 71666698 | 15-733 | LG 316 |
| 71668066 | 75-371 | LG 316 |
| 71670835 | 15-729 | LG 316 |
| 71671593 | 91-714 | LG 543 |
| 71679916 | 91-703 | LG 541 |
| 71704100 | 590-685* | LG 540 |
| 71704100 | 90-685* | LG 540 |
| 71704100 | 91-705 | LG 540 |
| 71704100A | 590-685* | LG 540 |
| 71704100A | 90-685* | LG 540 |
| 71704100A | 91-705 | LG 540 |
| 71704101 | 91-701 | LG 545 |
| 71704101 | 96-654* | LG 511 |
| 71704856 | 590-685* | LG 540 |
| 71704856 | 90-685* | LG 540 |
| 71704856 | 91-723 | LG 508 |
| 72027134 | 75-218 | LG 316 |
| 72029622 | 75-218 | LG 316 |
| 72116711 | 75-218 | LG 316 |
| A48185 | 396-726* | LG 391 |
| A48185 | 596-344* | LG 495 |
| A48185 | 91-623 | LG 485 |
| A48185 | 96-344* | LG 536 |
| **SITREX** | | |
| SM31150 | 15-737 | LG 316 |
| **SKIL** | | |
| 313450 | 49-816 | LG 612 |
| 313451 | 49-812 | LG 612 |
| **SNAPPER** | | |
| 023966YP | 78-110 | LG 833 |
| 1-0061 | 80-036 | LG 727 |
| 1-0210 | 80-014 | LG 727 |
| 1-0211 | 02-535 | |
| 102424 | 33-002 | LG 946 |
| 1-0525 | 71-800 | LG 956 |
| 10570 | 45-000 | LG 237 |
| 10570 | 45-010 | LG 238 |
| 1-0570 | 45-010 | LG 238 |
| 10696 | 45-295 | LG 232 |
| 1-0696 | 45-295 | LG 232 |
| 10743 | 45-083 | LG 246 |
| 1-0743 | 45-083 | LG 246 |
| 1-0745 | 45-104 | LG 939 |
| 10749 | 75-068 | LG 318 |
| 1-0749 | 175-068 | LG 318 |
| 1-0749 | 75-068 | LG 318 |
| 10765 | 76-067-0 | LG 726 |
| 1-0765 | 76-067-0 | LG 726 |
| 1-0787 | 44-347 | LG 840 |
| 1-0821 | 71-276 | LG 956 |
| 1-0821 | 71-400 | LG 956 |
| 1-0927 | 51-001-0 | LG 727 |
| 1-0943 | 45-010 | LG 238 |
| 1-0948 | 34-002 | LG 821 |
| 1-0953 | 45-000 | LG 237 |
| 10986 | 45-081 | LG 249 |
| 1-0986 | 45-081 | LG 249 |
| 1-1011 | 81-102 | LG 805 |
| 11021823 | 99-134 | LG 527 |
| 1-1024 | 45-110 | LG 245 |
| 1-1029 | 34-038 | LG 821 |
| 1-1035 | 80-745 | LG 728 |
| 11048 | 48-206 | LG 246 |
| 1-1048 | 48-206 | LG 246 |
| 11082 | 72-450 | LG 1037 |
| 1-1082 | 72-450 | LG 1037 |
| 1-1083 | 72-450 | LG 1037 |
| 1-1083 | 72-510 | LG 1036 |
| 11099 | 45-083 | LG 246 |
| 1-1099 | 45-083 | LG 246 |
| 11100 | 45-083 | LG 246 |
| 1-1100 | 45-083 | LG 246 |
| 11117 | 75-059 | LG 318 |
| 1-1117 | 75-059 | LG 318 |
| 11130 | 60-061 | LG 718 |
| 1-1130 | 60-061 | LG 718 |
| 1-1138 | 42-008 | LG 945 |
| 1-1155 | 33-387 | LG 945 |
| 1-1709 | 02-103 | LG 722 |
| 1-1777 | 07-101 | LG 775 |
| 1-1777 | 07-102 | LG 774 |
| 11802 | 72-450 | LG 1037 |
| 11807 | 45-000 | LG 237 |
| 11807 | 45-010 | LG 238 |
| 1-1807 | 45-000 | LG 237 |
| 1-1807 | 45-010 | LG 238 |
| 1-1807 | 45-034 | LG 224 |
| 1-1853 | 33-390 | |
| 1-18877 | 75-508 | LG 319 |
| 11913 | 599-133* | LG 422 |
| 11913 | 96-133* | LG 422 |
| 11914 | 599-133* | LG 422 |
| 11914 | 96-133* | LG 422 |
| 11949 | 599-133* | LG 422 |
| 11949 | 96-133* | LG 422 |
| 11991 | 60-991 | LG 718 |
| 1-1991 | 60-991 | LG 718 |
| 12061 | 60-061 | LG 718 |
| 1-2061 | 60-061 | LG 718 |
| 1-2122 | 05-061 | LG 914 |
| 1-2123 | 05-060 | LG 914 |
| 1-2124 | 34-021 | LG 833 |
| 12140 | 44-500 | LG 840 |
| 1-2304 | 45-209 | LG 246 |
| 1-2321 | 86-010 | LG 782 |
| 1-2337 | 07-392 | LG 767 |
| 1-2345 | 72-442 | LG 1037 |
| 1-2347 | 72-510 | LG 1036 |
| 12348 | 72-442 | LG 1037 |
| 12348 | 72-450 | LG 1037 |
| 1-2348 | 72-442 | LG 1037 |
| 1-2348 | 72-450 | LG 1037 |
| 12353 | 75-353 | LG 319 |
| 1-2353 | 75-353 | LG 319 |
| 12354 | 75-354 | LG 319 |
| 1-2354 | 75-354 | LG 319 |
| 1-2390 | 45-000 | LG 237 |
| 1-2390 | 45-047 | LG 241 |
| 1-2401 | 44-500 | LG 840 |
| 12425 | 46-024 | LG 719 |
| 1-2425 | 46-024 | LG 719 |
| 12496 | 72-442 | LG 1037 |

X



* OREGON® Gator™ replacement blade

## SNAPPER

| OEM No. | OREGON | Page |
|---|---|---|
| 1-2496 | 72-442 | LG 1037 |
| 12508 | 75-508 | LG 319 |
| 1-2508 | 75-508 | LG 319 |
| 1-2515 | 07-308 | LG 772 |
| 12579 | 72-109 | LG 1037 |
| 1-2579 | 72-109 | LG 1037 |
| 1-2623 | 33-021 | LG 950 |
| 1-2699 | 02-535 | |
| 1-2757 | 80-014 | LG 727 |
| 1-2828 | 45-259 | LG 224 |
| 1-2830 | 80-036 | LG 727 |
| 1-2927 | 65-229 | LG 342 |
| 1-2931 | 45-205 | LG 228 |
| 1-3000 | 80-036 | LG 727 |
| 1305379 | 45-000 | LG 237 |
| 1305379 | 45-010 | LG 238 |
| 1-3249 | 80-036 | LG 727 |
| 1-3250 | 80-014 | LG 727 |
| 13313 | 45-295 | LG 232 |
| 1-3313 | 45-295 | LG 232 |
| 13321 | 45-083 | LG 246 |
| 1-3321 | 45-083 | LG 246 |
| 1-3694 | 05-060 | LG 914 |
| 1-3850 | 34-005 | LG 821 |
| 13865 | 80-740 | LG 852 |
| 1-3865 | 80-740 | LG 852 |
| 1-4033 | 02-535 | |
| 1-4153 | 34-009 | LG 821 |
| 1-4208 | 34-031 | LG 821 |
| 1-4340 | 34-003 | LG 821 |
| 14359 | 07-102 | LG 774 |
| 1-4359 | 07-101 | LG 775 |
| 1-4359 | 07-102 | LG 774 |
| 14398 | 15-739 | LG 316 |
| 1-4483 | 45-057 | LG 249 |
| 1-4514 | 45-242 | LG 243 |
| 1-4523 | 49-018 | LG 728 |
| 14525 | 75-105 | LG 319 |
| 1-4525 | 15-746 | LG 317 |
| 1-4525 | 175-105 | LG 319 |
| 1-4525 | 75-105 | LG 319 |
| 14539 | 07-101 | LG 775 |
| 14604 | 72-442 | LG 1037 |
| 1-4604 | 72-442 | LG 1037 |
| 147559 | 45-209 | LG 246 |
| 14799 | 15-740 | LG 316 |
| 14800 | 15-741 | LG 317 |
| 1-4800 | 15-741 | LG 317 |
| 15474 | 45-000 | LG 237 |
| 1-5474 | 45-000 | LG 237 |
| 1-5474 | 45-010 | LG 238 |
| 1-6325 | 07-406 | LG 767 |
| 1656147A | 92-146 | LG 539 |
| 1656147ASM | 92-146 | LG 539 |
| 1657589A | 91-713 | LG 422 |
| 1671593A | 91-714 | LG 543 |
| 1671593ASM | 91-714 | LG 543 |
| 1687016 | 91-615 | LG 522 |
| 1687016SM | 91-615 | LG 522 |
| 1687017 | 91-616 | LG 543 |
| 1687017 | 96-398* | LG 525 |
| 1687017SM | 91-616 | LG 543 |
| 1687017SM | 96-398* | LG 525 |
| 1687398 | 91-615 | LG 522 |
| 1-6982 | 99-117 | LG 556 |
| 17002 | 96-620* | LG 551 |
| 17002 | 99-103 | LG 551 |
| 1-7002 | 99-103 | LG 551 |
| 1-7002 | 99-107 | LG 551 |
| 1-7002 | 99-121 | LG 551 |
| 17027774 | 590-685* | LG 540 |
| 17027774 | 90-685* | LG 540 |
| 17027774 | 91-705 | LG 540 |
| 17037 | 396-726* | LG 391 |
| 17037 | 596-344* | LG 495 |
| 17037 | 91-181 | LG 495 |
| 17037 | 96-344* | LG 536 |
| 1704100 | 590-685* | LG 540 |
| 1704100 | 90-685* | LG 540 |
| 1704100 | 91-705 | LG 540 |
| 1704100A | 590-685* | LG 540 |
| 1704100A | 90-685* | LG 540 |
| 1704100A | 91-705 | LG 540 |
| 1704100ASM | 91-705 | LG 540 |
| 1704100BMA | 590-685* | LG 540 |
| 1704100BMA | 90-685* | LG 540 |
| 1704100BMA | 91-705 | LG 540 |
| 1704100BZ | 590-685* | LG 540 |
| 1704100BZ | 90-685* | LG 540 |
| 1704100BZ | 91-705 | LG 540 |
| 1704100SM | 91-705 | LG 540 |
| 17043 | 396-735* | LG 452 |
| 17043 | 596-308* | LG 548 |
| 17043 | 96-308* | LG 456 |
| 17043 | 99-126 | LG 501 |
| 1-7043 | 91-126 | LG 548 |
| 1-7043 | 99-126 | LG 501 |
| 1-7048 | 48-145 | LG 698 |
| 1704856 | 590-685* | LG 540 |
| 1704856 | 90-685* | LG 540 |
| 1704856 | 91-723 | LG 508 |
| 1704856A | 590-685* | LG 540 |
| 1704856A | 90-685* | LG 540 |
| 1704856A | 91-723 | LG 508 |
| 1704856ASM | 590-685* | LG 540 |
| 1704856ASM | 90-685* | LG 540 |
| 1704856ASM | 91-723 | LG 508 |
| 1704856BMA | 590-685* | LG 540 |
| 1704856BMA | 90-685* | LG 540 |
| 1704856BMA | 91-723 | LG 508 |
| 1704856BZ | 590-685* | LG 540 |
| 1704856BZ | 90-685* | LG 540 |
| 1704856BZ | 91-723 | LG 508 |
| 17053 | 15-742 | LG 317 |
| 1-7063 | 33-114 | LG 734 |
| 17081 | 396-727* | LG 467 |
| 17081 | 596-347* | LG 448 |
| 17081 | 91-308 | LG 467 |
| 17081 | 96-347* | LG 387 |
| 1708229 | 390-698* | LG 542 |
| 1708229 | 590-698* | LG 510 |
| 1708229 | 90-698* | LG 510 |
| 1708229 | 91-706 | LG 550 |
| 1708229A | 390-698* | LG 542 |
| 1708229A | 590-698* | LG 510 |
| 1708229A | 90-698* | LG 510 |
| 1708229A | 91-706 | LG 550 |
| 1708229ASM | 390-698* | LG 542 |
| 1708229ASM | 590-698* | LG 510 |
| 1708229ASM | 90-698* | LG 510 |
| 1708229ASM | 91-706 | LG 550 |
| 1708229BMA | 390-698* | LG 542 |
| 1708229BMA | 590-698* | LG 510 |
| 1708229BMA | 90-698* | LG 510 |
| 1708229BMA | 91-706 | LG 550 |
| 1-7083 | 81-102 | LG 805 |
| 1-7084 | 81-101 | |
| 1716696 | 590-685* | LG 540 |
| 1716696 | 90-685* | LG 540 |
| 1716696 | 91-705 | LG 540 |
| 1716696A | 590-685* | LG 540 |
| 1716696A | 90-685* | LG 540 |
| 1716696A | 91-705 | LG 540 |
| 1716696ASM | 590-685* | LG 540 |
| 1716696ASM | 90-685* | LG 540 |
| 1716696ASM | 91-705 | LG 540 |
| 1716696SM | 590-685* | LG 540 |
| 1716696SM | 90-685* | LG 540 |
| 1716696SM | 91-705 | LG 540 |
| 1716697 | 390-698* | LG 542 |
| 1716697 | 590-698* | LG 510 |
| 1716697 | 90-698* | LG 510 |
| 1716697 | 91-706 | LG 550 |
| 1716697A | 390-698* | LG 542 |
| 1716697A | 590-698* | LG 510 |
| 1716697A | 90-698* | LG 510 |
| 1716697A | 91-706 | LG 550 |
| 1716697ASM | 390-698* | LG 542 |
| 1716697ASM | 590-698* | LG 510 |
| 1716697ASM | 90-698* | LG 510 |
| 1716697ASM | 91-706 | LG 550 |
| 1716697BMA | 390-698* | LG 542 |
| 1716697BMA | 590-698* | LG 510 |
| 1716697BMA | 90-698* | LG 510 |
| 1716697BMA | 91-706 | LG 550 |
| 1716697BZ | 390-698* | LG 542 |
| 1716697BZ | 590-698* | LG 510 |
| 1716697BZ | 90-698* | LG 510 |
| 1716697BZ | 91-706 | LG 550 |
| 1716697SM | 390-698* | LG 542 |
| 1716697SM | 590-698* | LG 510 |
| 1716697SM | 90-698* | LG 510 |
| 1716697SM | 91-706 | LG 550 |
| 17168 | 96-620* | LG 551 |
| 17168 | 99-121 | LG 551 |
| 1-7168 | 99-121 | LG 551 |
| 1721086 | 390-698* | LG 542 |
| 1721086 | 590-698* | LG 510 |
| 1721086 | 90-698* | LG 510 |
| 1721086A | 390-698* | LG 542 |
| 1721086A | 590-698* | LG 510 |
| 1721086A | 90-698* | LG 510 |
| 1721086ASM | 390-698* | LG 542 |
| 1721086ASM | 590-698* | LG 510 |
| 1721086ASM | 90-698* | LG 510 |
| 1722090 | 91-615 | LG 522 |
| 1722090A | 91-615 | LG 522 |
| 1723507 | 33-026 | LG 947 |
| 1725921 | 96-398* | LG 525 |
| 1725921A | 96-398* | LG 525 |
| 1725921ASM | 96-398* | LG 525 |
| 1725921AYP | 96-398* | LG 525 |
| 1725921SM | 96-398* | LG 525 |
| 1726453 | 390-698* | LG 542 |
| 1726453 | 590-698* | LG 510 |
| 1726453 | 90-698* | LG 510 |
| 1726453 | 91-706 | LG 550 |
| 1726453A | 390-698* | LG 542 |
| 1726453A | 590-698* | LG 510 |
| 1726453A | 90-698* | LG 510 |
| 1726453A | 91-706 | LG 550 |
| 1726453ASM | 390-698* | LG 542 |
| 1726453ASM | 590-698* | LG 510 |
| 1726453ASM | 90-698* | LG 510 |
| 1726453ASM | 91-706 | LG 550 |
| 1726453BMA | 390-698* | LG 542 |
| 1726453BMA | 590-698* | LG 510 |
| 1726453BMA | 90-698* | LG 510 |
| 1726453BMA | 91-706 | LG 550 |
| 1726453BZ | 390-698* | LG 542 |
| 1726453BZ | 590-698* | LG 510 |
| 1726453BZ | 90-698* | LG 510 |
| 1726453BZ | 91-706 | LG 550 |
| 1726453BZP | 390-698* | LG 542 |
| 1726453BZP | 590-698* | LG 510 |
| 1726453BZP | 90-698* | LG 510 |
| 1726453BZP | 91-706 | LG 550 |
| 1726453BZYP | 390-698* | LG 542 |
| 1726453BZYP | 590-698* | LG 510 |
| 1726453BZYP | 90-698* | LG 510 |
| 1726453BZYP | 91-706 | LG 550 |
| 1727774 | 590-685* | LG 540 |
| 1727774 | 90-685* | LG 540 |
| 1727774 | 91-705 | LG 540 |
| 1727774A | 590-685* | LG 540 |
| 1727774A | 90-685* | LG 540 |
| 1727774A | 91-705 | LG 540 |
| 1727774BMA | 590-685* | LG 540 |
| 1727774BMA | 90-685* | LG 540 |
| 1727774BMA | 91-705 | LG 540 |
| 1727774BZ | 590-685* | LG 540 |
| 1727774BZ | 90-685* | LG 540 |
| 1727774BZ | 91-705 | LG 540 |
| 1731898 | 391-610* | LG 554 |
| 1731898 | 91-610 | LG 554 |
| 1731898A | 391-610* | LG 554 |
| 1731898A | 91-610 | LG 554 |
| 1731898ASM | 391-610* | LG 554 |
| 1731898ASM | 91-610 | LG 554 |
| 1731898BMA | 391-610* | LG 554 |
| 1731898BMA | 91-610 | LG 554 |
| 1731898BZ | 391-610* | LG 554 |
| 1731898BZ | 91-610 | LG 554 |
| 1731898BZYP | 391-610* | LG 554 |
| 1731898BZYP | 91-610 | LG 554 |
| 1732006 | 33-026 | LG 947 |
| 1732006SM | 33-026 | LG 947 |
| 1732006YP | 33-026 | LG 947 |
| 1-7326 | 05-060 | LG 914 |
| 1736043 | 91-616 | LG 543 |
| 1736043 | 96-398* | LG 525 |
| 1736043A | 91-616 | LG 543 |
| 1736043A | 96-398* | LG 525 |
| 1736043AYP | 91-616 | LG 543 |
| 1736043AYP | 96-398* | LG 525 |
| 1736043BM | 91-616 | LG 543 |
| 1736043BM | 96-398* | LG 525 |
| 1736043BMA | 91-616 | LG 543 |
| 1736043BMA | 96-398* | LG 525 |
| 1736043BMYP | 91-616 | LG 543 |
| 1736043BMYP | 96-398* | LG 525 |
| 1736043BZ | 91-616 | LG 543 |
| 1736043BZ | 96-398* | LG 525 |
| 1736044 | 91-615 | LG 522 |
| 1736044A | 91-615 | LG 522 |
| 1736044AYP | 91-615 | LG 522 |
| 1737228 | 599-132* | LG 522 |
| 1737228 | 99-132 | LG 539 |
| 1737228A | 99-132 | LG 539 |
| 1737228AYP | 599-132* | LG 522 |
| 1737228AYP | 99-132 | LG 539 |
| 1737228BM | 99-132 | LG 539 |
| 1737228BMA | 99-132 | LG 539 |
| 1737228BZ | 99-132 | LG 539 |
| 1737228BZYP | 599-132* | LG 522 |
| 1737228BZYP | 99-132 | LG 539 |
| 1737228YP | 99-132 | LG 539 |
| 1737252 | 599-133* | LG 422 |
| 1737252 | 96-133* | LG 422 |
| 1737252 | 99-133 | LG 542 |
| 1737252A | 599-133* | LG 422 |
| 1737252A | 96-133* | LG 422 |
| 1737252A | 99-133 | LG 542 |
| 1737252AYP | 599-133* | LG 422 |
| 1737252AYP | 96-133* | LG 422 |
| 1737252AYP | 99-133 | LG 542 |
| 1737252BM | 599-133* | LG 422 |
| 1737252BM | 96-133* | LG 422 |
| 1737252BM | 99-133 | LG 542 |
| 1737252BMA | 599-133* | LG 422 |
| 1737252BMA | 96-133* | LG 422 |
| 1737252BMA | 99-133 | LG 542 |
| 1737252BZ | 599-133* | LG 422 |
| 1737252BZ | 96-133* | LG 422 |
| 1737252BZ | 99-133 | LG 542 |
| 1737252BZYP | 599-133* | LG 422 |
| 1737252BZYP | 96-133* | LG 422 |
| 1737252BZYP | 99-133 | LG 542 |
| 1737252YP | 599-133* | LG 422 |

X

# 2019 OEM X-Reference

| OEM No. | OREGON | Page |
|---|---|---|
| **SNAPPER** | | |
| 1737252YP | 96-133* | LG 422 |
| 1737252YP | 99-133 | LG 542 |
| 1737816 | 391-605* | LG 544 |
| 1737816 | 91-605 | LG 544 |
| 1737816BM | 391-605* | LG 544 |
| 1737816BM | 91-605 | LG 544 |
| 1737816BMA | 391-605* | LG 544 |
| 1737816BMA | 91-605 | LG 544 |
| 1737816BMYP | 391-605* | LG 544 |
| 1737816BMYP | 91-605 | LG 544 |
| 1737816BZ | 391-605* | LG 544 |
| 1737816BZ | 91-605 | LG 544 |
| 1737816SM | 391-605* | LG 544 |
| 1737816SM | 91-605 | LG 544 |
| 1737816YP | 391-605* | LG 544 |
| 1737816YP | 91-605 | LG 544 |
| 1739889 | 599-132* | LG 522 |
| 1739889A | 599-132* | LG 522 |
| 1739889AYP | 599-132* | LG 522 |
| 1739889BM | 599-132* | LG 522 |
| 1739889BMA | 599-132* | LG 522 |
| 1739889BZ | 99-132 | LG 539 |
| 175303 | 391-614* | LG 548 |
| 175303YP | 391-614* | LG 548 |
| 1-7536 | 48-148 | LG 695 |
| 1756152SYP | 396-726* | LG 391 |
| 1756152SYP | 596-344* | LG 495 |
| 1756152SYP | 91-256 | LG 437 |
| 1756152SYP | 96-344* | LG 536 |
| 1757303 | 391-606* | LG 547 |
| 1757303 | 91-606 | LG 509 |
| 1757303BM | 391-606* | LG 547 |
| 1757303BM | 91-606 | LG 509 |
| 1757303YP | 391-606* | LG 547 |
| 1757303YP | 91-606 | LG 509 |
| 1758878BMYP | 391-607* | LG 511 |
| 1758878BMYP | 91-607 | LG 544 |
| 1759055 | 391-614* | LG 548 |
| 1759055YP | 391-614* | LG 548 |
| 17736 | 44-500 | LG 840 |
| 1-7817 | 33-024 | LG 945 |
| 179889BZ | 599-132* | LG 522 |
| 18069 | 96-630* | LG 556 |
| 18069 | 99-112 | LG 556 |
| 1-8069 | 99-112 | LG 556 |
| 1-8177 | 86-008 | LG 782 |
| 18188 | 60-188 | LG 718 |
| 1-8188 | 60-188 | LG 718 |
| 1-8189 | 72-117 | LG 1036 |
| 1-8198 | 35-016 | LG 809 |
| 18201 | 60-201 | LG 718 |
| 1-8201 | 60-201 | LG 718 |
| 1-8228 | 72-410 | LG 1030 |
| 18236 | 75-073 | LG 319 |
| 1-8236 | 175-073 | LG 319 |
| 1-8236 | 75-073 | LG 319 |
| 1-8274 | 34-043 | LG 823 |
| 1-8288 | 34-034 | LG 821 |
| 1-8315 | 45-206 | LG 231 |
| 18353 | 60-353 | LG 719 |
| 1-8353 | 60-353 | LG 719 |
| 18486 | 60-353 | LG 719 |
| 1-8486 | 60-353 | LG 719 |
| 1-8555 | 81-101 | |
| 18585 | 78-021 | LG 832 |
| 1-8585 | 34-007 | LG 826 |
| 1-8585 | 78-110 | LG 833 |
| 1-8587 | 44-347 | LG 840 |
| 18604 | 33-334 | LG 730 |
| 1-8604 | 33-334 | LG 730 |
| 18637 | 73-013 | LG 849 |
| 1-8637 | 73-013 | LG 849 |
| 1-8673 | 73-013 | LG 849 |
| 18764 | 73-013 | LG 849 |
| 1-8764 | 73-013 | LG 849 |
| 1-8767 | 45-208 | LG 245 |
| 1-8786 | 45-208 | LG 245 |
| 1-8816 | 33-391 | LG 945 |
| 18817 | 33-330 | LG 729 |
| 18817 | 33-331 | LG 730 |
| 18817 | 33-335 | LG 730 |
| 18817 | 33-337 | LG 730 |
| 1-8817 | 33-330 | LG 729 |
| 1-8817 | 33-335 | LG 730 |
| 18889 | 60-353 | LG 719 |
| 1-8889 | 60-353 | LG 719 |
| 1-9078 | 78-031 | LG 826 |
| 19125 | 45-220 | LG 232 |
| 1-9125 | 45-220 | LG 232 |
| 19175 | 60-786 | LG 719 |
| 1-9175 | 60-786 | LG 719 |
| 1-9250 | 86-029 | LG 782 |
| 1-9251 | 86-008 | LG 782 |
| 19254 | 60-240 | LG 719 |
| 1-9254 | 60-240 | LG 719 |
| 1-9383 | 44-500 | LG 840 |
| 19515 | 596-628* | LG 528 |
| 19515 | 96-628* | LG 528 |
| 19515 | 99-113 | LG 528 |
| 1-9515 | 99-113 | LG 528 |
| 19523 | 96-633* | LG 556 |
| 19523 | 99-117 | LG 556 |
| 1-9523 | 99-117 | LG 556 |
| 19544 | 33-332 | LG 730 |
| 1-9544 | 33-332 | LG 730 |
| 1-9545 | 33-384 | LG 947 |
| 1-9645 | 99-103 | LG 551 |
| 1-9645 | 99-107 | LG 551 |
| 1-9702 | 99-103 | LG 551 |
| 1-9702 | 99-107 | LG 551 |
| 1-9702 | 99-121 | LG 551 |
| 1-9710 | 99-103 | LG 551 |
| 1-9710 | 99-107 | LG 551 |
| 1-9710 | 99-121 | LG 551 |
| 19795 | 96-620* | LG 551 |
| 19795 | 99-107 | LG 551 |
| 1-9795 | 99-107 | LG 551 |
| 2108202SM | 45-295 | LG 232 |
| 2-1707 | 78-690 | LG 840 |
| 2-1742 | 85-011 | LG 909 |
| 2-1745 | 41-005 | LG 728 |
| 22252 | 75-073 | LG 319 |
| 2-2252 | 75-073 | LG 319 |
| 2233126 | 45-209 | LG 246 |
| 22796 | 72-109 | LG 1037 |
| 2-2796 | 72-109 | LG 1037 |
| 22801 | 72-442 | LG 1037 |
| 2-2886 | 33-026 | LG 947 |
| 2-3355 | 33-028 | LG 947 |
| 2-3364 | 51-001-0 | LG 727 |
| 23416 | 15-744 | LG 317 |
| 2343032 | 45-206 | LG 231 |
| 2-3735 | 81-010 | |
| 2-3744 | 41-005 | LG 728 |
| 23966 | 78-110 | LG 833 |
| 24466 | 99-614* | LG 551 |
| 2-4479 | 75-105 | LG 319 |
| 2448587 | 33-334 | LG 730 |
| 2448587 | 33-335 | LG 730 |
| 2448587 | 33-336 | LG 730 |
| 24497 | 15-746 | LG 317 |
| 2-4497 | 15-746 | LG 317 |
| 2-4521 | 44-500 | LG 840 |
| 24618 | 15-748 | LG 317 |
| 24619 | 73-044 | LG 849 |
| 2-4619 | 73-044 | LG 849 |
| 24891 | 75-219 | LG 319 |
| 2-4891 | 75-219 | LG 319 |
| 2508122 | 45-208 | LG 245 |
| 2526385 | 33-330 | LG 729 |
| 2526385 | 33-331 | LG 730 |
| 2526385 | 33-335 | LG 730 |
| 2526385 | 33-337 | LG 730 |
| 2572525 | 72-701 | LG 1044 |
| 26305 | 15-749 | LG 317 |
| 26343 | 33-397 | LG 942 |
| 2-6343 | 33-397 | LG 942 |
| 26691 | 96-620* | LG 551 |
| 26691 | 99-103 | LG 551 |
| 2-6691 | 99-103 | LG 551 |
| 2-6691 | 99-107 | LG 551 |
| 2-6691 | 99-121 | LG 551 |
| 26693 | 45-000 | LG 237 |
| 26693 | 45-010 | LG 238 |
| 2-6693 | 45-000 | LG 237 |
| 2-6693 | 45-010 | LG 238 |
| 2-7164 | 83-012 | LG 819 |
| 2-7225 | 33-027 | LG 947 |
| 27346 | 15-750 | LG 317 |
| 27347 | 15-751 | LG 317 |
| 28014 | 45-209 | LG 246 |
| 2-8014 | 45-209 | LG 246 |
| 28051 | 15-753 | LG 317 |
| 28425 | 73-044 | LG 849 |
| 28427 | 73-013 | LG 849 |
| 2-8427 | 73-013 | LG 849 |
| 28542 | 33-002 | LG 946 |
| 2-8542 | 33-002 | LG 946 |
| 2-9025 | 05-060 | LG 914 |
| 29101 | 15-756 | LG 317 |
| 29604 | 75-727 | LG 319 |
| 2-9604 | 75-727 | LG 319 |
| 29641 | 15-760 | LG 317 |
| 29907 | 15-761 | LG 317 |
| 302030 | 82-306 | LG 874 |
| 303044 | 45-030 | LG 245 |
| 310 | 55-820 | LG 935 |
| 311 | 55-820 | LG 935 |
| 3-1724 | 79-724 | LG 556 |
| 3-1777 | 60-991 | LG 718 |
| 32127 | 73-027 | LG 850 |
| 3-5520 | 33-121 | LG 734 |
| 35710 | 15-762 | LG 317 |
| 3-5727 | 72-450 | LG 1037 |
| 36006N | 82-306 | LG 874 |
| 362024 | 82-306 | LG 874 |
| 363194 | 45-030 | LG 245 |
| 36585 | 15-763 | LG 318 |
| 376567 | 45-205 | LG 228 |
| 3-7723 | 79-728 | LG 556 |
| 37982 | 73-027 | LG 850 |
| 3-7982 | 73-027 | LG 850 |
| 394358 | 07-101 | LG 775 |
| 394358 | 07-102 | LG 774 |
| 394358S | 07-101 | LG 775 |
| 394358S | 07-102 | LG 774 |
| 42005 | 55-820 | LG 935 |
| 4-2005 | 55-820 | LG 935 |
| 42074 | 05-072 | LG 1023 |
| 4-2074 | 05-072 | LG 1023 |
| 42076 | 55-803 | LG 1022 |
| 4-2076 | 55-803 | LG 1022 |
| 42110 | 55-120 | LG 770 |
| 42110 | 55-123 | LG 770 |
| 4-2110 | 55-120 | LG 770 |
| 4-2110 | 55-123 | LG 770 |
| 4-2241 | 55-334 | LG 633 |
| 4-2310 | 49-020 | LG 631 |
| 42735 | 15-764 | LG 318 |
| 42813 | 15-765 | LG 318 |
| 42998 | 99-614* | LG 551 |
| 43844 | 15-766 | LG 318 |
| 44637 | 15-767 | LG 318 |
| 4-4785 | 85-011 | LG 909 |
| 4-6095 | 55-342 | LG 627 |
| 4-6110 | 49-021 | LG 629 |
| 4-6120 | 55-333 | LG 633 |
| 4-6555 | 45-227 | LG 234 |
| 5021357X1 | 83-011 | LG 819 |
| 5022182 | 33-026 | LG 947 |
| 5023256 | 15-768 | LG 318 |
| 5023256SM | 15-768 | LG 318 |
| 50473 | 45-295 | LG 232 |
| 5-0618 | 72-728 | LG 1044 |
| 5-0618 | 72-729 | LG 1044 |
| 5-0711 | 86-005 | LG 782 |
| 50918 | 45-107 | LG 245 |
| 5-0918 | 15-107 | LG 273 |
| 5-0918 | 45-107 | LG 245 |
| 5100881 | 15-768 | LG 318 |
| 5101756S | 396-726* | LG 391 |
| 5101756S | 596-344* | LG 495 |
| 5101756S | 91-312 | LG 478 |
| 5101756S | 96-344* | LG 536 |
| 5101756SYP | 396-726* | LG 391 |
| 5101756SYP | 596-344* | LG 495 |
| 5101756SYP | 91-312 | LG 478 |
| 5101756SYP | 96-344* | LG 536 |
| 5101756X2 | 396-726* | LG 391 |
| 5101756X2 | 596-344* | LG 495 |
| 5101756X2 | 91-312 | LG 478 |
| 5101756X2 | 96-344* | LG 536 |
| 5101986 | 396-716* | LG 451 |
| 5101986 | 596-310* | LG 447 |
| 5101986 | 91-313 | LG 494 |
| 5101986 | 96-310* | LG 444 |
| 5101986BM | 396-716* | LG 451 |
| 5101986BM | 596-310* | LG 447 |
| 5101986BM | 91-313 | LG 494 |
| 5101986BM | 96-310* | LG 444 |
| 5101986BMYP | 396-716* | LG 451 |
| 5101986BMYP | 596-310* | LG 447 |
| 5101986BMYP | 91-313 | LG 494 |
| 5101986BMYP | 96-310* | LG 444 |
| 5101986S | 396-716* | LG 451 |
| 5101986S | 596-310* | LG 447 |
| 5101986S | 91-313 | LG 494 |
| 5101986S | 96-310* | LG 444 |
| 5101986SYP | 396-716* | LG 451 |
| 5101986SYP | 596-310* | LG 447 |
| 5101986SYP | 91-313 | LG 494 |
| 5101986SYP | 96-310* | LG 444 |
| 5101986YP | 396-716* | LG 451 |
| 5101986YP | 596-310* | LG 447 |
| 5101986YP | 91-313 | LG 494 |
| 5101986YP | 96-310* | LG 444 |
| 5102227S | 396-731* | LG 427 |
| 5102227S | 91-609 | LG 469 |
| 5103303S | 396-716* | LG 451 |
| 5103303S | 596-310* | LG 447 |
| 5103303S | 91-368 | LG 460 |
| 5103303S | 96-310* | LG 444 |
| 5103303SX2 | 396-716* | LG 451 |
| 5103303SX2 | 596-310* | LG 447 |
| 5103303SX2 | 91-368 | LG 460 |
| 5103303SX2 | 96-310* | LG 444 |
| 5103303SYP | 396-716* | LG 451 |
| 5103303SYP | 596-310* | LG 447 |
| 5103303SYP | 91-368 | LG 460 |
| 5103303SYP | 96-310* | LG 444 |
| 5103304S | 396-726* | LG 391 |
| 5103304S | 596-344* | LG 495 |
| 5103304S | 91-335 | LG 420 |
| 5103304S | 96-344* | LG 536 |
| 5103304SYP | 396-726* | LG 391 |
| 5103304SYP | 596-344* | LG 495 |
| 5103304SYP | 91-335 | LG 420 |
| 5103304SYP | 96-344* | LG 536 |
| 5103304X2 | 396-726* | LG 391 |

X



* OREGON® Gator™ replacement blade

## SNAPPER

| OEM No. | OREGON | Page |
|---|---|---|
| 5103304X2 | 596-344* | LG 495 |
| 5103304X2 | 91-335 | LG 420 |
| 5103304X2 | 96-344* | LG 536 |
| 5103305S | 396-727* | LG 467 |
| 5103305S | 596-347* | LG 448 |
| 5103305S | 96-347* | LG 387 |
| 5104045SYP | 396-727* | LG 467 |
| 5104045SYP | 596-347* | LG 448 |
| 5104045SYP | 91-308 | LG 467 |
| 5104045SYP | 96-347* | LG 387 |
| 5-1460 | 51-011 | LG 727 |
| 5-1616 | 51-011 | LG 727 |
| 519012 | 45-083 | LG 246 |
| 5-1996 | 35-033 | LG 809 |
| 5-2267 | 72-728 | LG 1044 |
| 5-2267 | 72-729 | LG 1044 |
| 5-3103 | 76-002 | LG 726 |
| 5-3103 | 76-014 | LG 726 |
| 5-3217 | 51-000 | LG 727 |
| 5-3225 | 51-000 | LG 727 |
| 5-3740 | 33-112 | LG 735 |
| 539118672 | 599-133* | LG 422 |
| 539118672 | 96-133* | LG 422 |
| 539118673 | 599-133* | LG 422 |
| 539118673 | 96-133* | LG 422 |
| 5-4073 | 45-295 | LG 232 |
| 552188 | 82-306 | LG 874 |
| 5-7423 | 76-014 | LG 726 |
| 5-7444 | 51-000 | LG 727 |
| 5-7582 | 78-641 | LG 835 |
| 58925 | 33-121 | LG 734 |
| 5-8925 | 33-121 | LG 734 |
| 5-9759 | 82-306 | LG 874 |
| 5-9964 | 82-307-0 | LG 874 |
| 60631 | 73-001 | LG 847 |
| 6-0631 | 73-001 | LG 847 |
| 6-0710 | 51-000 | LG 727 |
| 6-0710 | 51-222 | LG 727 |
| 60916 | 60-786 | LG 719 |
| 6-0916 | 60-786 | LG 719 |
| 61215 | 73-043 | LG 847 |
| 6-1215 | 73-043 | LG 847 |
| 6-1275 | 51-222 | LG 727 |
| 6-1276 | 51-011 | LG 727 |
| 62465 | 15-769 | LG 318 |
| 68049 | 55-803 | LG 1022 |
| 7010061 | 80-036 | LG 727 |
| 7010210 | 80-014 | LG 727 |
| 7010211 | 02-535 | |
| 7010525 | 71-800 | LG 956 |
| 7010570 | 45-000 | LG 237 |
| 7010570 | 45-010 | LG 238 |
| 7010696 | 45-295 | LG 232 |
| 7010743 | 45-083 | LG 246 |
| 7010745 | 45-104 | LG 939 |
| 7010749 | 75-068 | LG 318 |
| 7010749YP | 75-068 | LG 318 |
| 7010765 | 76-067-0 | LG 726 |
| 7010787 | 44-347 | LG 840 |
| 7010821 | 71-276 | LG 956 |
| 7010821 | 71-400 | LG 956 |
| 7010948 | 34-002 | LG 821 |
| 7010953 | 45-000 | LG 237 |
| 7010986 | 45-081 | LG 249 |
| 7010986YP | 45-081 | LG 249 |
| 7011024 | 45-110 | LG 245 |
| 7011029 | 34-038 | LG 821 |
| 7011035 | 80-745 | LG 728 |
| 7011048 | 48-206 | LG 246 |
| 7011048YP | 48-206 | LG 246 |
| 70110765 | 76-067-0 | LG 726 |
| 7011082 | 72-450 | LG 1037 |
| 7011083 | 72-450 | LG 1037 |
| 7011083 | 72-510 | LG 1036 |
| 7011100 | 45-083 | LG 246 |
| 7011117 | 75-059 | LG 318 |
| 7011117YP | 75-059 | LG 318 |
| 7011130 | 60-061 | LG 718 |
| 7011138 | 42-008 | LG 945 |
| 7011155 | 33-387 | LG 945 |
| 7011155YP | 33-387 | LG 945 |
| 7011709 | 02-103 | LG 722 |
| 7011807 | 45-000 | LG 237 |
| 7011807 | 45-010 | LG 238 |
| 7011807 | 45-034 | LG 224 |
| 7011807YP | 45-000 | LG 237 |
| 7011807YP | 45-010 | LG 238 |
| 7011853 | 33-390 | |
| 7011885 | 45-209 | LG 246 |
| 7011887 | 75-508 | LG 319 |
| 7011991 | 60-991 | LG 718 |
| 7012061 | 60-061 | LG 718 |
| 7012061YP | 60-061 | LG 718 |
| 7012122 | 05-061 | LG 914 |
| 7012124 | 34-021 | LG 833 |
| 7012124YP | 34-021 | LG 833 |
| 7012304 | 45-209 | LG 246 |
| 7012337 | 07-392 | LG 767 |
| 7012345 | 72-442 | LG 1037 |
| 7012347 | 72-510 | LG 1036 |
| 7012348 | 72-442 | LG 1037 |
| 7012348 | 72-450 | LG 1037 |
| 7012350 | 80-014 | LG 727 |
| 7012353 | 75-353 | LG 319 |
| 7012353YP | 75-353 | LG 319 |
| 7012354 | 75-354 | LG 319 |
| 7012354YP | 75-354 | LG 319 |
| 7012425 | 46-024 | LG 719 |
| 7012425YP | 46-024 | LG 719 |
| 7012496 | 72-442 | LG 1037 |
| 7012508 | 75-508 | LG 319 |
| 7012508YP | 75-508 | LG 319 |
| 7012515 | 07-308 | LG 772 |
| 7012579 | 72-109 | LG 1037 |
| 7012603 | 72-109 | LG 1037 |
| 7012603YP | 72-109 | LG 1037 |
| 7012623 | 33-021 | LG 950 |
| 7012623YP | 33-021 | LG 950 |
| 7012757 | 80-014 | LG 727 |
| 7012830 | 80-036 | LG 727 |
| 7012927 | 65-229 | LG 342 |
| 7013313 | 45-295 | LG 232 |
| 7013313SM | 45-295 | LG 232 |
| 7013321 | 45-083 | LG 246 |
| 7013321YP | 45-083 | LG 246 |
| 7013850 | 34-005 | LG 821 |
| 7013865 | 80-740 | LG 852 |
| 7013938 | 15-756 | LG 317 |
| 7014033 | 02-535 | |
| 7014036BMI | 396-716* | LG 451 |
| 7014036BMI | 596-310* | LG 447 |
| 7014036BMI | 96-310* | LG 444 |
| 7014036BMI | 99-127 | LG 375 |
| 7014036BMYP | 396-716* | LG 451 |
| 7014036BMYP | 596-310* | LG 447 |
| 7014036BMYP | 96-310* | LG 444 |
| 7014036BMYP | 99-127 | LG 375 |
| 7014036YP | 396-716* | LG 451 |
| 7014036YP | 596-310* | LG 447 |
| 7014036YP | 96-310* | LG 444 |
| 7014036YP | 99-127 | LG 375 |
| 7014208 | 34-031 | LG 821 |
| 7014340 | 34-003 | LG 821 |
| 7014359 | 07-101 | LG 775 |
| 7014359 | 07-102 | LG 774 |
| 7014398 | 15-739 | LG 316 |
| 7014398YP | 15-739 | LG 316 |
| 7014483 | 45-057 | LG 249 |
| 7014514 | 45-242 | LG 243 |
| 7014514YP | 45-242 | LG 243 |
| 7014523 | 49-018 | LG 728 |
| 7014525 | 75-105 | LG 319 |
| 7014604 | 72-442 | LG 1037 |
| 7014604 | 72-450 | LG 1037 |
| 7014604YP | 72-442 | LG 1037 |
| 7014799 | 15-740 | LG 316 |
| 7014799YP | 15-740 | LG 316 |
| 7014800 | 15-741 | LG 317 |
| 7014800YP | 15-741 | LG 317 |
| 7015257YP | 80-016 | LG 853 |
| 7015474 | 45-000 | LG 237 |
| 7016325 | 07-406 | LG 767 |
| 7016980 | 596-628* | LG 528 |
| 7016980 | 96-628* | LG 528 |
| 7016980BMA | 596-628* | LG 528 |
| 7016980BMA | 96-628* | LG 528 |
| 7016980BZ | 596-628* | LG 528 |
| 7016980BZ | 96-628* | LG 528 |
| 7016980BZYP | 596-628* | LG 528 |
| 7016980BZYP | 96-628* | LG 528 |
| 7016982 | 96-633* | LG 556 |
| 7016982BMA | 96-633* | LG 556 |
| 7016982BZ | 96-633* | LG 556 |
| 7017002 | 96-620* | LG 551 |
| 7017002 | 99-103 | LG 551 |
| 7017036 | 91-180 | LG 460 |
| 7017036 | 99-127 | LG 375 |
| 7017036BM | 396-716* | LG 451 |
| 7017036BM | 596-310* | LG 447 |
| 7017036BM | 96-310* | LG 444 |
| 7017036BM | 99-127 | LG 375 |
| 7017036BMI | 396-716* | LG 451 |
| 7017036BMI | 596-310* | LG 447 |
| 7017036BMI | 96-310* | LG 444 |
| 7017036BMI | 99-127 | LG 375 |
| 7017036BMYP | 91-180 | LG 460 |
| 7017036BMYP | 99-127 | LG 375 |
| 7017036YP | 91-180 | LG 460 |
| 7017036YP | 99-127 | LG 375 |
| 7017037 | 396-726* | LG 391 |
| 7017037 | 596-344* | LG 495 |
| 7017037 | 91-181 | LG 495 |
| 7017037 | 96-344* | LG 536 |
| 7017043 | 396-735* | LG 452 |
| 7017043 | 596-308* | LG 548 |
| 7017043 | 96-308* | LG 456 |
| 7017043 | 99-126 | LG 501 |
| 7017043YP | 396-735* | LG 452 |
| 7017043YP | 596-308* | LG 548 |
| 7017043YP | 96-308* | LG 456 |
| 7017043YP | 99-126 | LG 501 |
| 7017053 | 15-742 | LG 317 |
| 7017053YP | 15-742 | LG 317 |
| 7017063 | 33-114 | LG 734 |
| 7017081 | 396-727* | LG 467 |
| 7017081 | 596-347* | LG 448 |
| 7017081 | 91-308 | LG 467 |
| 7017081 | 96-347* | LG 387 |
| 7017086 | 96-620* | LG 551 |
| 7017086 | 99-121 | LG 551 |
| 7017168 | 96-620* | LG 551 |
| 7017168 | 99-121 | LG 551 |
| 7017736 | 44-500 | LG 840 |
| 7017817 | 33-024 | LG 945 |
| 7017817 | 33-397 | LG 942 |
| 7017817YP | 33-024 | LG 945 |
| 7017817YP | 33-397 | LG 942 |
| 7018069 | 96-630* | LG 556 |
| 7018069 | 99-112 | LG 556 |
| 7018069BMA | 96-630* | LG 556 |
| 7018069BMA | 99-112 | LG 556 |
| 7018069BZ | 96-630* | LG 556 |
| 7018069BZ | 99-112 | LG 556 |
| 7018069BZYP | 96-630* | LG 556 |
| 7018069BZYP | 99-112 | LG 556 |
| 7018188 | 60-188 | LG 718 |
| 7018189 | 72-117 | LG 1036 |
| 7018198 | 35-016 | LG 809 |
| 7018201 | 60-201 | LG 718 |
| 7018201YP | 60-201 | LG 718 |
| 7018228 | 72-410 | LG 1030 |
| 7018236 | 75-073 | LG 319 |
| 7018274 | 34-043 | LG 823 |
| 7018288 | 34-034 | LG 821 |
| 7018353 | 60-353 | LG 719 |
| 7018486 | 60-353 | LG 719 |
| 7018486YP | 60-353 | LG 719 |
| 7018604 | 33-334 | LG 730 |
| 7018604 | 33-335 | LG 730 |
| 7018604 | 33-336 | LG 730 |
| 7018637 | 73-013 | LG 849 |
| 7018764 | 73-013 | LG 849 |
| 7018766 | 45-208 | LG 245 |
| 7018781 | 44-347 | LG 840 |
| 7018782 | 76-067-0 | LG 726 |
| 7018782SM | 76-067-0 | LG 726 |
| 7018816 | 33-391 | LG 945 |
| 7018816YP | 33-391 | LG 945 |
| 7018817 | 33-330 | LG 729 |
| 7018817 | 33-331 | LG 730 |
| 7018817 | 33-337 | LG 730 |
| 7018889 | 60-353 | LG 719 |
| 7018889YP | 60-353 | LG 719 |
| 7019078 | 78-031 | LG 826 |
| 7019125 | 45-220 | LG 232 |
| 7019175 | 60-786 | LG 719 |
| 7019175YP | 60-786 | LG 719 |
| 7019250 | 86-029 | LG 782 |
| 7019254 | 60-240 | LG 719 |
| 7019254YP | 60-240 | LG 719 |
| 7019294 | 60-240 | LG 719 |
| 7019515 | 596-628* | LG 528 |
| 7019515 | 96-628* | LG 528 |
| 7019515 | 99-113 | LG 528 |
| 7019515BMA | 596-628* | LG 528 |
| 7019515BMA | 96-628* | LG 528 |
| 7019515BMA | 99-113 | LG 528 |
| 7019515BZ | 596-628* | LG 528 |
| 7019515BZ | 96-628* | LG 528 |
| 7019515BZ | 99-113 | LG 528 |
| 7019515BZYP | 596-628* | LG 528 |
| 7019515BZYP | 96-628* | LG 528 |
| 7019515BZYP | 99-113 | LG 528 |
| 7019523 | 96-633* | LG 556 |
| 7019523 | 99-117 | LG 556 |
| 7019523BMA | 96-633* | LG 556 |
| 7019523BMA | 99-117 | LG 556 |
| 7019523BZ | 96-633* | LG 556 |
| 7019523BZ | 99-117 | LG 556 |
| 7019523BZYP | 96-633* | LG 556 |
| 7019523BZYP | 99-117 | LG 556 |
| 7019523YP | 96-633* | LG 556 |
| 7019523YP | 99-117 | LG 556 |
| 7019544 | 33-332 | LG 730 |
| 7019545 | 33-384 | LG 947 |
| 7019545YP | 33-384 | LG 947 |
| 7019645 | 99-103 | LG 551 |
| 7019702 | 99-103 | LG 551 |
| 7019710 | 99-103 | LG 551 |
| 7019795 | 99-107 | LG 551 |
| 7019795BMA | 96-620* | LG 551 |
| 7019795BMA | 96-620* | LG 551 |
| 7019795BMA | 99-103 | LG 551 |
| 7019795BMA | 99-107 | LG 551 |
| 7019795BMA | 99-107 | LG 551 |
| 7019795BMA | 99-121 | LG 551 |
| 7019795BZ | 96-620* | LG 551 |
| 7019795BZ | 99-107 | LG 551 |
| 7019795BZYP | 96-620* | LG 551 |

X

# 2019 OEM X-Reference

| OEM No. | OREGON | Page |
|---|---|---|
| **SNAPPER** | | |
| 7019795BZYP | 99-107 | LG 551 |
| 7019795YP | 96-620* | LG 551 |
| 7019795YP | 99-107 | LG 551 |
| 7022252 | 75-073 | LG 319 |
| 7022252YP | 75-073 | LG 319 |
| 7022541 | 15-761 | LG 317 |
| 7022796 | 72-109 | LG 1037 |
| 7022797 | 33-118-1 | LG 733 |
| 7022801 | 72-442 | LG 1037 |
| 7022886 | 33-026 | LG 947 |
| 7022886YP | 33-026 | LG 947 |
| 7023355 | 33-028 | LG 947 |
| 7023364 | 51-001-0 | LG 727 |
| 7023416 | 15-744 | LG 317 |
| 7023416YP | 15-744 | LG 317 |
| 7023735 | 81-010 | |
| 7023966 | 78-110 | LG 833 |
| 7023966YP | 78-110 | LG 833 |
| 7024466 | 99-614* | LG 551 |
| 7024497 | 15-746 | LG 317 |
| 7024497 | 75-105 | LG 319 |
| 7024497YP | 15-746 | LG 317 |
| 7024497YP | 75-105 | LG 319 |
| 7024511 | 15-761 | LG 317 |
| 7024521 | 44-500 | LG 840 |
| 7024521YP | 44-500 | LG 840 |
| 7024618 | 15-748 | LG 317 |
| 7024618YP | 15-748 | LG 317 |
| 7024619 | 73-044 | LG 849 |
| 7024741 | 96-633* | LG 556 |
| 7024741A | 96-633* | LG 556 |
| 7024741AYP | 96-633* | LG 556 |
| 7024741BMA | 96-633* | LG 556 |
| 7024741BZ | 96-633* | LG 556 |
| 7024819 | 86-008 | LG 782 |
| 7024891 | 75-219 | LG 319 |
| 7024891YP | 75-219 | LG 319 |
| 7025042 | 15-760 | LG 317 |
| 7026305 | 15-749 | LG 317 |
| 7026305YP | 15-749 | LG 317 |
| 7026343 | 33-397 | LG 942 |
| 7026343SM | 33-397 | LG 942 |
| 7026407 | 96-620* | LG 551 |
| 7026407 | 99-121 | LG 551 |
| 7026407AYP | 96-620* | LG 551 |
| 7026407AYP | 99-121 | LG 551 |
| 7026428 | 98-102* | LG 410 |
| 7026428BMA | 98-102* | LG 410 |
| 7026428BZ | 98-102* | LG 410 |
| 7026428BZYP | 98-102* | LG 410 |
| 7026453 | 596-628* | LG 528 |
| 7026453 | 96-628* | LG 528 |
| 7026565 | 96-630* | LG 556 |
| 7026565BM | 96-630* | LG 556 |
| 7026565BMA | 96-630* | LG 556 |
| 7026565BZ | 96-630* | LG 556 |
| 7026565BZYP | 96-630* | LG 556 |
| 7026565YP | 96-630* | LG 556 |
| 7026691 | 96-620* | LG 551 |
| 7026691 | 99-103 | LG 551 |
| 7026691BZYP | 96-620* | LG 551 |
| 7026691BZYP | 99-103 | LG 551 |
| 7026691YP | 99-103 | LG 551 |
| 7026693 | 45-000 | LG 237 |
| 7026693 | 45-010 | LG 238 |
| 7026693YP | 45-000 | LG 237 |
| 702669BMA | 96-620* | LG 551 |
| 702669BMA | 99-103 | LG 551 |
| 702669BZ | 96-620* | LG 551 |
| 702669BZ | 99-103 | LG 551 |
| 702669YP | 96-620* | LG 551 |
| 702669YP | 99-103 | LG 551 |
| 7027225 | 33-027 | LG 947 |
| 7027225YP | 33-027 | LG 947 |
| 7027346 | 15-750 | LG 317 |
| 7027346YP | 15-750 | LG 317 |
| 7027347 | 15-751 | LG 317 |
| 7027347YP | 15-751 | LG 317 |
| 7028014 | 45-209 | LG 246 |
| 7028014YP | 45-209 | LG 246 |
| 7028051 | 15-753 | LG 317 |
| 7028334SM | 15-753 | LG 317 |
| 7028425 | 73-044 | LG 849 |
| 7028427 | 73-013 | LG 849 |
| 7028427YP | 73-013 | LG 849 |
| 7028524 | 96-620* | LG 551 |
| 7028524 | 99-103 | LG 551 |
| 7028542 | 33-002 | LG 946 |
| 7028542YP | 33-002 | LG 946 |
| 7028619 | 15-767 | LG 318 |
| 7028722 | 45-000 | LG 237 |
| 7028722YP | 45-000 | LG 237 |
| 7029025 | 05-060 | LG 914 |
| 7029101 | 15-756 | LG 317 |
| 7029101YP | 15-756 | LG 317 |
| 7029255 | 15-762 | LG 317 |
| 7029269 | 15-764 | LG 318 |
| 7029604 | 75-727 | LG 319 |
| 7029604YP | 75-727 | LG 319 |
| 7029641 | 15-760 | LG 317 |
| 7029641YP | 15-760 | LG 317 |
| 7029907 | 15-761 | LG 317 |
| 7029907YP | 15-761 | LG 317 |
| 7032127 | 73-027 | LG 850 |
| 703371 | 198-049 | LG 518 |
| 703371 | 598-631* | LG 390 |
| 703371 | 98-631* | LG 390 |
| 7034168 | 96-633* | LG 556 |
| 7034168BMA | 96-633* | LG 556 |
| 7034168BZ | 96-633* | LG 556 |
| 7034168BZYP | 96-633* | LG 556 |
| 7034185YP | 96-633* | LG 556 |
| 7035635 | 596-628* | LG 528 |
| 7035635 | 96-628* | LG 528 |
| 7035710 | 15-762 | LG 317 |
| 7035710YP | 15-762 | LG 317 |
| 7035727 | 72-450 | LG 1037 |
| 7035727YP | 72-450 | LG 1037 |
| 7035947 | 73-044 | LG 849 |
| 7035947YP | 73-044 | LG 849 |
| 7036585 | 15-763 | LG 318 |
| 7037982 | 73-027 | LG 850 |
| 7037982YP | 73-027 | LG 850 |
| 7041939 | 96-620* | LG 551 |
| 7041939 | 99-121 | LG 551 |
| 7041939BMA | 96-620* | LG 551 |
| 7041939BMA | 99-121 | LG 551 |
| 7041939BZ | 96-620* | LG 551 |
| 7041939BZ | 99-121 | LG 551 |
| 7041939BZYP | 96-620* | LG 551 |
| 7041939BZYP | 99-121 | LG 551 |
| 7042074 | 05-072 | LG 1023 |
| 7042074YP | 05-072 | LG 1023 |
| 7042076 | 55-803 | LG 1022 |
| 7042110 | 55-120 | LG 770 |
| 7042110YP | 55-120 | LG 770 |
| 7042735 | 15-764 | LG 318 |
| 7042735YP | 15-764 | LG 318 |
| 7042813 | 15-765 | LG 318 |
| 7042813YP | 15-765 | LG 318 |
| 7042998 | 99-614* | LG 551 |
| 7042998BMA | 99-614* | LG 551 |
| 7042998BZ | 99-614* | LG 551 |
| 7042998BZYP | 99-614* | LG 551 |
| 7043844 | 15-766 | LG 318 |
| 7043844YP | 15-766 | LG 318 |
| 704425 | 195-070 | LG 469 |
| 704425 | 596-370* | LG 427 |
| 704425 | 96-370* | LG 533 |
| 704429 | 195-032 | LG 425 |
| 704429 | 596-900* | LG 380 |
| 704429 | 96-900* | LG 526 |
| 7044637 | 15-767 | LG 318 |
| 7044637YP | 15-767 | LG 318 |
| 7044785 | 85-011 | LG 909 |
| 7046555 | 45-227 | LG 234 |
| 7046555YP | 45-227 | LG 234 |
| 7046625 | 396-731* | LG 427 |
| 7046625BM | 396-731* | LG 427 |
| 7046625BMYP | 396-731* | LG 427 |
| 7046625YP | 396-731* | LG 427 |
| 7046983 | 45-208 | LG 245 |
| 7050618 | 72-728 | LG 1044 |
| 7050618 | 72-729 | LG 1044 |
| 7050711 | 86-005 | LG 782 |
| 7050918 | 45-107 | LG 245 |
| 7050918YP | 45-107 | LG 245 |
| 7051746 | 45-107 | LG 245 |
| 7051996 | 35-033 | LG 809 |
| 7052267 | 72-728 | LG 1044 |
| 7052267 | 72-729 | LG 1044 |
| 7052268 | 72-728 | LG 1044 |
| 7052268 | 72-729 | LG 1044 |
| 7052305 | 72-728 | LG 1044 |
| 7052305 | 72-729 | LG 1044 |
| 7053103 | 76-014 | LG 726 |
| 7053740 | 33-112 | LG 735 |
| 7058925 | 33-121 | LG 734 |
| 7058925YP | 33-121 | LG 734 |
| 7059964 | 82-307-0 | LG 874 |
| 7060631 | 73-001 | LG 847 |
| 7060631YP | 73-001 | LG 847 |
| 7060631YP | 80-740 | LG 852 |
| 7060916 | 60-786 | LG 719 |
| 7061215 | 73-043 | LG 847 |
| 7061215YP | 73-043 | LG 847 |
| 7061275 | 51-000 | LG 727 |
| 7061275 | 51-222 | LG 727 |
| 7061276 | 51-011 | LG 727 |
| 7062465 | 15-769 | LG 318 |
| 7062465YP | 15-769 | LG 318 |
| 7068049 | 55-803 | LG 1022 |
| 7068049YP | 55-803 | LG 1022 |
| 7070295 | 45-107 | LG 245 |
| 7072684 | 33-379 | LG 945 |
| 7072684YP | 33-379 | LG 945 |
| 7073390 | 51-000 | LG 727 |
| 7073396 | 396-727* | LG 467 |
| 7073396 | 596-347* | LG 448 |
| 7073396 | 91-308 | LG 467 |
| 7073396 | 96-347* | LG 387 |
| 7073396YP | 396-727* | LG 467 |
| 7073396YP | 596-347* | LG 448 |
| 7073396YP | 91-308 | LG 467 |
| 7073396YP | 96-347* | LG 387 |
| 7074426 | 86-010 | LG 782 |
| 7074453 | 35-050 | LG 809 |
| 7074810 | 48-145 | LG 698 |
| 7075115 | 81-101 | |
| 7075115 | 81-102 | LG 805 |
| 7075235YP | 15-763 | LG 318 |
| 7075622 | 33-334 | LG 730 |
| 7075622 | 33-335 | LG 730 |
| 7075622 | 33-336 | LG 730 |
| 7075622SM | 33-334 | LG 730 |
| 7075622SM | 33-335 | LG 730 |
| 7075622SM | 33-336 | LG 730 |
| 7075671 | 33-330 | LG 729 |
| 7075671 | 33-331 | LG 730 |
| 7075671 | 33-335 | LG 730 |
| 7075671 | 33-337 | LG 730 |
| 7075671YP | 33-330 | LG 729 |
| 7075671YP | 33-331 | LG 730 |
| 7075671YP | 33-337 | LG 730 |
| 7075691YP | 33-331 | LG 730 |
| 7075691YP | 33-337 | LG 730 |
| 7075751 | 396-726* | LG 391 |
| 7075751 | 596-344* | LG 495 |
| 7075751 | 91-181 | LG 495 |
| 7075751 | 96-344* | LG 536 |
| 7075751BMA | 396-726* | LG 391 |
| 7075751BMA | 596-344* | LG 495 |
| 7075751BMA | 91-181 | LG 495 |
| 7075751BMA | 96-344* | LG 536 |
| 7075751BZ | 396-726* | LG 391 |
| 7075751BZ | 596-344* | LG 495 |
| 7075751BZ | 91-181 | LG 495 |
| 7075751BZ | 96-344* | LG 536 |
| 7075751BZYP | 396-726* | LG 391 |
| 7075751BZYP | 596-344* | LG 495 |
| 7075751BZYP | 91-181 | LG 495 |
| 7075751BZYP | 96-344* | LG 536 |
| 7075770 | 396-727* | LG 467 |
| 7075770 | 596-347* | LG 448 |
| 7075770 | 91-308 | LG 467 |
| 7075770 | 96-347* | LG 387 |
| 7075770BMA | 396-727* | LG 467 |
| 7075770BMA | 596-347* | LG 448 |
| 7075770BMA | 91-308 | LG 467 |
| 7075770BMA | 96-347* | LG 387 |
| 7075770BZ | 396-727* | LG 467 |
| 7075770BZ | 596-347* | LG 448 |
| 7075770BZ | 91-308 | LG 467 |
| 7075770BZ | 96-347* | LG 387 |
| 7075770YP | 396-727* | LG 467 |
| 7075770YP | 596-347* | LG 448 |
| 7075770YP | 91-308 | LG 467 |
| 7075770YP | 96-347* | LG 387 |
| 7075771 | 396-735* | LG 452 |
| 7075771 | 596-308* | LG 548 |
| 7075771 | 96-308* | LG 456 |
| 7075771 | 99-126 | LG 501 |
| 7075771BMA | 396-735* | LG 452 |
| 7075771BMA | 596-308* | LG 548 |
| 7075771BMA | 96-308* | LG 456 |
| 7075771BMA | 99-126 | LG 501 |
| 7075771BZ | 396-735* | LG 452 |
| 7075771BZ | 596-308* | LG 548 |
| 7075771BZ | 96-308* | LG 456 |
| 7075771BZ | 99-126 | LG 501 |
| 7075771BZYP | 396-735* | LG 452 |
| 7075771BZYP | 596-308* | LG 548 |
| 7075771BZYP | 96-308* | LG 456 |
| 7075771BZYP | 99-126 | LG 501 |
| 7076065 | 60-408 | LG 700 |
| 70761215 | 73-043 | LG 847 |
| 7076384 | 33-379 | LG 945 |
| 7076399 | 45-030 | LG 245 |
| 7076399 | 45-127 | LG 244 |
| 7076436 | 09-802 | LG 233 |
| 7076439 | 43-075 | |
| 7076450 | 396-726* | LG 391 |
| 7076450 | 596-344* | LG 495 |
| 7076450 | 91-181 | LG 495 |
| 7076450 | 96-344* | LG 536 |
| 7076486 | 02-188 | LG 676 |
| 7076496 | 75-036 | LG 297 |
| 7076496YP | 75-036 | LG 297 |
| 7076497 | 75-221 | LG 280 |
| 7076497YP | 75-221 | LG 280 |
| 7076498 | 75-240 | LG 297 |
| 7076500 | 34-024 | LG 822 |
| 7076504 | 48-211 | LG 233 |
| 7076514 | 45-030 | LG 245 |
| 7076514 | 45-127 | LG 244 |
| 7076514YP | 45-030 | LG 245 |
| 7076514YP | 45-127 | LG 244 |
| 7076515 | 45-078 | LG 230 |

X



* OREGON® Gator™ replacement blade

## SNAPPER

| OEM No. | OREGON | Page |
|---|---|---|
| 7076520 | 34-023 | LG 822 |
| 7076520 | 78-031 | LG 826 |
| 707652070 | 78-031 | LG 826 |
| 7076520YP | 78-031 | LG 826 |
| 7076572 | 07-100 | LG 774 |
| 7076675 | 396-716* | LG 451 |
| 7076675 | 596-310* | LG 447 |
| 7076675 | 91-180 | LG 460 |
| 7076675 | 96-310* | LG 444 |
| 7076677 | 75-058 | LG 255 |
| 7076677YP | 75-058 | LG 255 |
| 7076680 | 75-058 | LG 255 |
| 7076680 | 75-240 | LG 297 |
| 7076680YP | 75-240 | LG 297 |
| 7076688 | 34-007 | LG 826 |
| 7076688 | 34-024 | LG 822 |
| 7076688 | 78-021 | LG 832 |
| 7076822 | 33-397 | LG 942 |
| 7077288 | 69-282 | LG 817 |
| 7077288 | 83-282 | LG 817 |
| 7077288 | 83-402 | LG 817 |
| 7077322 | 45-242 | LG 243 |
| 7077324 | 45-242 | LG 243 |
| 7077328 | 45-242 | LG 243 |
| 7077344 | 396-726* | LG 391 |
| 7077344 | 596-344* | LG 495 |
| 7077344 | 91-181 | LG 495 |
| 7077344 | 96-344* | LG 536 |
| 7077377 | 396-716* | LG 451 |
| 7077377 | 596-310* | LG 447 |
| 7077377 | 96-310* | LG 444 |
| 7077377 | 99-127 | LG 375 |
| 7077378 | 91-180 | LG 460 |
| 7077378 | 99-127 | LG 375 |
| 7077855 | 78-020 | LG 825 |
| 7079181 | 15-771 | LG 318 |
| 7079181YP | 15-771 | LG 318 |
| 7079197 | 33-118-1 | LG 733 |
| 7079201 | 33-397 | LG 942 |
| 7079215 | 396-713 * | LG 577 |
| 7079215 | 91-557 | LG 545 |
| 7079215 | 96-343* | LG 395 |
| 7079221 | 396-713 * | LG 577 |
| 7079221 | 91-557 | LG 545 |
| 7079221 | 96-343* | LG 395 |
| 7079221BM | 396-713 * | LG 577 |
| 7079221BM | 91-557 | LG 545 |
| 7079221BM | 96-343* | LG 395 |
| 7079221YP | 396-713 * | LG 577 |
| 7079221YP | 91-557 | LG 545 |
| 7079221YP | 96-343* | LG 395 |
| 7079222 | 91-127 | LG 396 |
| 7079222 | 99-615* | LG 552 |
| 7079369 | 91-126 | LG 548 |
| 7079369 | 99-617* | LG 395 |
| 7079369BM | 91-126 | LG 548 |
| 7079369BM | 99-617* | LG 395 |
| 7079369YP | 91-126 | LG 548 |
| 7079369YP | 99-617* | LG 395 |
| 7079371 | 91-128 | LG 424 |
| 7079371 | 99-615* | LG 552 |
| 7079371BM | 91-128 | LG 424 |
| 7079371BM | 99-615* | LG 552 |
| 7079371BMYP | 91-128 | LG 424 |
| 7079371BMYP | 99-615* | LG 552 |
| 7079371YP | 91-128 | LG 424 |
| 7079371YP | 99-615* | LG 552 |
| 7079388 | 91-123 | LG 395 |
| 7079388 | 99-617* | LG 395 |
| 7079446 | 33-118-1 | LG 733 |
| 7079776 | 15-773 | LG 318 |
| 7079776YP | 15-773 | LG 318 |
| 7079779 | 15-774 | LG 318 |
| 7079779YP | 15-774 | LG 318 |
| 7079781 | 15-776 | LG 318 |
| 7079781YP | 15-776 | LG 318 |
| 7079813 | 45-227 | LG 234 |
| 7091550 | 80-740 | LG 852 |
| 7100242 | 99-119 | LG 489 |
| 7100242A | 99-119 | LG 489 |
| 7100242AYP | 99-119 | LG 489 |
| 7100242BM | 99-119 | LG 489 |
| 7100242BMA | 99-119 | LG 489 |
| 7100242BZ | 99-119 | LG 489 |
| 7100242BZYP | 99-119 | LG 489 |
| 7100242ZZZZ | 99-119 | LG 489 |
| 7100851 | 99-134 | LG 527 |
| 7100851A | 99-134 | LG 527 |
| 7100851AYP | 99-134 | LG 527 |
| 7100851BM | 99-134 | LG 527 |
| 7100851BMA | 99-134 | LG 527 |
| 7100851BMYP | 99-134 | LG 527 |
| 7100851BZ | 99-134 | LG 527 |
| 7103288 | 591-611* | LG 527 |
| 7103288 | 91-611 | LG 527 |
| 7103288BM | 591-611* | LG 527 |
| 7103288BM | 91-611 | LG 527 |
| 7103288BMA | 591-611* | LG 527 |
| 7103288BMA | 91-611 | LG 527 |
| 7103288BZ | 591-611* | LG 527 |
| 7103288BZ | 91-611 | LG 527 |
| 7103288YP | 591-611* | LG 527 |
| 7103288YP | 91-611 | LG 527 |
| 71040383 | 596-628* | LG 528 |
| 71040383 | 96-628* | LG 528 |
| 71040383BM | 596-628* | LG 528 |
| 71040383BM | 96-628* | LG 528 |
| 71040383BZYP | 596-628* | LG 528 |
| 71040383BZYP | 96-628* | LG 528 |
| 7104083BMA | 596-628* | LG 528 |
| 7104083BMA | 96-628* | LG 528 |
| 7104083BZ | 596-628* | LG 528 |
| 7104083BZ | 96-628* | LG 528 |
| 7104083BZYP | 596-628* | LG 528 |
| 7104083BZYP | 96-628* | LG 528 |
| 7104196 | 596-628* | LG 528 |
| 7104196 | 96-628* | LG 528 |
| 7104196 | 99-131 | LG 555 |
| 7104196BM | 596-628* | LG 528 |
| 7104196BM | 96-628* | LG 528 |
| 7104196BM | 99-131 | LG 555 |
| 7104196BMA | 596-628* | LG 528 |
| 7104196BMA | 96-628* | LG 528 |
| 7104196BMA | 99-131 | LG 555 |
| 7104196BZ | 596-628* | LG 528 |
| 7104196BZ | 96-628* | LG 528 |
| 7104196BZ | 99-131 | LG 555 |
| 7104196BZYP | 596-628* | LG 528 |
| 7104196BZYP | 96-628* | LG 528 |
| 7104196BZYP | 99-131 | LG 555 |
| 7104196YP | 596-628* | LG 528 |
| 7104196YP | 96-628* | LG 528 |
| 7104196YP | 99-131 | LG 555 |
| 721865 | 99-134 | LG 527 |
| 7-2623 | 33-021 | LG 950 |
| 72684 | 33-379 | LG 945 |
| 7-2684 | 33-379 | LG 945 |
| 7-4453 | 35-050 | LG 809 |
| 75671 | 33-330 | LG 729 |
| 75671 | 33-331 | LG 730 |
| 75671 | 33-337 | LG 730 |
| 75770 | 396-727* | LG 467 |
| 75770 | 596-347* | LG 448 |
| 75770 | 91-308 | LG 467 |
| 75770 | 96-347* | LG 387 |
| 76065 | 60-408 | LG 700 |
| 76379 | 82-306 | LG 874 |
| 7-6379 | 82-306 | LG 874 |
| 76398 | 78-640 | LG 835 |
| 76400 | 48-205 | LG 694 |
| 76436 | 09-802 | LG 233 |
| 76439 | 43-075 | |
| 76450 | 396-726* | LG 391 |
| 76450 | 596-344* | LG 495 |
| 76450 | 91-181 | LG 495 |
| 76450 | 96-344* | LG 536 |
| 76486 | 02-188 | LG 676 |
| 76496 | 75-036 | LG 297 |
| 7-6496 | 75-036 | LG 297 |
| 76497 | 75-221 | LG 280 |
| 7-6497 | 75-221 | LG 280 |
| 76498 | 75-240 | LG 297 |
| 76500 | 34-024 | LG 822 |
| 76500 | 78-021 | LG 832 |
| 76504 | 48-211 | LG 233 |
| 7-6504 | 48-211 | LG 233 |
| 76510 | 45-220 | LG 232 |
| 76514 | 45-030 | LG 245 |
| 76514 | 45-127 | LG 244 |
| 7-6514 | 45-030 | LG 245 |
| 7-6514 | 45-127 | LG 244 |
| 76515 | 45-078 | LG 230 |
| 76520 | 34-023 | LG 822 |
| 76520 | 78-031 | LG 826 |
| 7-6520 | 78-031 | LG 826 |
| 76520YP | 78-031 | LG 826 |
| 76572 | 07-100 | LG 774 |
| 7-6572 | 07-100 | LG 774 |
| 76645 | 82-307-0 | LG 874 |
| 7-6645 | 82-307-0 | LG 874 |
| 76675 | 396-716* | LG 451 |
| 76675 | 596-310* | LG 447 |
| 76675 | 91-180 | LG 460 |
| 76675 | 96-310* | LG 444 |
| 7-6675 | 91-180 | LG 460 |
| 76677 | 75-058 | LG 255 |
| 7-6677 | 75-058 | LG 255 |
| 76680 | 75-058 | LG 255 |
| 76680 | 75-240 | LG 297 |
| 7-6680 | 75-240 | LG 297 |
| 76688 | 34-007 | LG 826 |
| 76688 | 34-024 | LG 822 |
| 7-6688 | 34-007 | LG 826 |
| 77285 | 78-641 | LG 835 |
| 7-7324 | 45-242 | LG 243 |
| 77344 | 396-726* | LG 391 |
| 77344 | 596-344* | LG 495 |
| 77344 | 91-181 | LG 495 |
| 77344 | 96-344* | LG 536 |
| 77355 | 83-282 | LG 817 |
| 77355 | 83-402 | LG 817 |
| 7-7355 | 69-282 | LG 817 |
| 77377 | 91-180 | LG 460 |
| 77377 | 99-127 | LG 375 |
| 77378 | 91-180 | LG 460 |
| 77378 | 99-127 | LG 375 |
| 77717 | 35-012 | LG 806 |
| 77855 | 78-020 | LG 825 |
| 7-8767 | 45-208 | LG 245 |
| 79181 | 15-771 | LG 318 |
| 79197 | 33-118-1 | LG 733 |
| 7-9197 | 33-118-1 | LG 733 |
| 79215 | 396-713 * | LG 577 |
| 79215 | 91-557 | LG 545 |
| 79215 | 96-343* | LG 395 |
| 79221 | 396-713 * | LG 577 |
| 79221 | 91-557 | LG 545 |
| 79221 | 96-343* | LG 395 |
| 79222 | 91-127 | LG 396 |
| 79222 | 99-615* | LG 552 |
| 7-9222 | 91-127 | LG 396 |
| 79369 | 91-126 | LG 548 |
| 79369 | 99-617* | LG 395 |
| 79371 | 91-128 | LG 424 |
| 79371 | 99-615* | LG 552 |
| 7-9371 | 91-128 | LG 424 |
| 79388 | 91-123 | LG 395 |
| 79388 | 99-617* | LG 395 |
| 7-9388 | 91-123 | LG 395 |
| 79389 | 92-150 | LG 395 |
| 7-9446 | 33-118-1 | LG 733 |
| 79776 | 15-773 | LG 318 |
| 79779 | 15-774 | LG 318 |
| 79781 | 15-776 | LG 318 |
| 79813 | 45-227 | LG 234 |
| 7-9813 | 45-227 | LG 234 |
| 898133 | 07-101 | LG 775 |
| 898133 | 07-102 | LG 774 |
| 91550 | 80-740 | LG 852 |
| 9-1550 | 80-740 | LG 852 |
| 943424 | 45-057 | LG 249 |

## SOLO

| OEM No. | OREGON | Page |
|---|---|---|
| 05-10-552 | 49-021 | LG 629 |
| 05-10-616 | 49-807 | LG 611 |
| 05-10-802 | 49-812 | LG 612 |

## SOUTHERN STATES

| OEM No. | OREGON | Page |
|---|---|---|
| 754-0145 | 75-145 | LG 300 |
| 754-0201 | 75-441 | LG 334 |
| 754-0230 | 75-008 | LG 301 |
| 754-0234 | 75-441 | LG 334 |
| 754-0240 | 75-009 | LG 301 |
| 754-0241 | 75-012 | LG 301 |
| 754-0293 | 75-018 | LG 301 |
| 954-0145 | 75-145 | LG 300 |
| 954-0145A | 75-145 | LG 300 |
| 954-015A | 75-145 | LG 300 |
| 954-0201 | 75-441 | LG 334 |
| 954-0230 | 75-008 | LG 301 |
| 954-0234 | 75-441 | LG 334 |
| 954-0240 | 75-009 | LG 301 |
| 954-0241 | 75-012 | LG 301 |
| 954-0241A | 75-012 | LG 301 |
| 954-0293 | 75-018 | LG 301 |

## SPARTAN

| OEM No. | OREGON | Page |
|---|---|---|
| 438-0002-00 | 396-702* | LG 480 |
| 438-0002-00 | 596-702* | LG 388 |
| 438-0002-00 | 93-011 | LG 557 |

## SPEIGEL

| OEM No. | OREGON | Page |
|---|---|---|
| 754-0151 | 75-004 | LG 301 |
| 754-0935 | 75-092 | LG 304 |
| 954-0151 | 75-004 | LG 301 |
| 954-0935 | 75-092 | LG 304 |

## STAMBAUGH THOMPSON

| OEM No. | OREGON | Page |
|---|---|---|
| 754-0201 | 75-441 | LG 334 |
| 754-0234 | 75-441 | LG 334 |
| 754-0935 | 75-092 | LG 304 |
| 954-0201 | 75-441 | LG 334 |
| 954-0234 | 75-441 | LG 334 |
| 954-0935 | 75-092 | LG 304 |

## STEINER

| OEM No. | OREGON | Page |
|---|---|---|
| 112111-01 | 593-600* | LG 385 |
| 112111-01 | 93-009 | LG 476 |
| 112111-02 | 393-601* | LG 582 |
| 112111-02 | 593-601* | LG 386 |
| 112111-02 | 93-010 | LG 432 |
| 112111-02 | 93-601* | LG 432 |
| 112111-03 | 396-702* | LG 480 |
| 112111-03 | 596-702* | LG 388 |
| 112111-03 | 93-011 | LG 557 |
| 112111-03 | 96-702* | LG 491 |
| 79-035 | 396-739* | LG 479 |
| 79-035 | 91-188 | LG 439 |
| 79-036 | 396-739* | LG 479 |

X

* OREGON® Gator™ replacement blade

# 2019 OEM X-Reference

| OEM No. | OREGON | Page |
|---|---|---|
| **STEINER** | | |
| 79-037 | 391-731* | LG 558 |
| 79-038 | 391-731* | LG 558 |
| 79-050 | 396-739* | LG 479 |
| 79-068 | 391-731* | LG 558 |
| 79-068 | 91-731 | LG 558 |
| **STERCHI BROS.** | | |
| 754-0145 | 75-145 | LG 300 |
| 754-0151 | 75-004 | LG 301 |
| 754-0178 | 75-179 | LG 310 |
| 754-0201 | 75-441 | LG 334 |
| 754-0230 | 75-008 | LG 301 |
| 754-0234 | 75-441 | LG 334 |
| 754-0240 | 75-009 | LG 301 |
| 754-0241 | 75-012 | LG 301 |
| 754-0266 | 75-016 | LG 301 |
| 754-0293 | 75-018 | LG 301 |
| 754-0935 | 75-092 | LG 304 |
| **STERCHI BROS.** | | |
| 954-0145 | 75-145 | LG 300 |
| 954-0145A | 75-145 | LG 300 |
| 954-0151 | 75-004 | LG 301 |
| 954-015A | 75-145 | LG 300 |
| 954-0178 | 75-179 | LG 310 |
| 954-0201 | 75-441 | LG 334 |
| 954-0230 | 75-008 | LG 301 |
| 954-0234 | 75-441 | LG 334 |
| 954-0240 | 75-009 | LG 301 |
| 954-0241 | 75-012 | LG 301 |
| 954-0241A | 75-012 | LG 301 |
| 954-0266 | 75-016 | LG 301 |
| 954-0266A | 75-016 | LG 301 |
| 954-0293 | 75-018 | LG 301 |
| 954-0935 | 75-092 | LG 304 |
| **STERLING STORES** | | |
| 754-0151 | 75-004 | LG 301 |
| 754-0201 | 75-441 | LG 334 |
| 754-0234 | 75-441 | LG 334 |
| 954-0151 | 75-004 | LG 301 |
| 954-0201 | 75-441 | LG 334 |
| 954-0234 | 75-441 | LG 334 |
| **STIHL** | | |
| 000 350 3503 | 07-109 | LG 778 |
| 0000 120 1653 | 30-853 | LG 213 |
| 0000 120 1654 | 30-853 | LG 213 |
| 0000 350 0510 | 56-018 | LG 690 |
| 0000 350 0512 | 56-018 | LG 690 |
| 0000 350 0520 | 56-019 | LG 772 |
| 0000 350 0522 | 56-019 | LG 772 |
| 0000 350 3500 | 07-109 | LG 778 |
| 0000 350 3500 | 07-217 | LG 778 |
| 0000 350 3502 | 07-217 | LG 778 |
| 0000 350 3503 | 07-217 | LG 778 |
| 0000 350 3506 | 07-133 | LG 778 |
| 0000 400 1300 | 33-244 | LG 786 |
| 0000 400 1306 | 33-243 | LG 786 |
| 0000 400 7009 | 77-355-1 | LG 865 |
| 0000 955 0801 | 04-009 | LG 686 |
| 0000-120-1653 | 30-853 | LG 213 |
| 0000-120-1654 | 30-853 | LG 213 |
| 0000-140-4402 | 30-853 | LG 213 |
| 0000-350-0510 | 56-018 | LG 690 |
| 0000-350-0520 | 56-019 | LG 772 |
| 0000-350-0522 | 56-019 | LG 772 |
| 0000-350-0531 | 07-132 | LG 773 |
| 0000-350-3500 | 07-109 | LG 778 |
| 0000-350-3502 | 07-109 | LG 778 |
| 0000-350-3503 | 07-109 | LG 778 |
| 0000-350-3504 | 07-109 | LG 778 |
| 0000-350-3504 | 07-217 | LG 778 |
| 0000-350-3506 | 07-133 | LG 778 |
| 0000-400-1300 | 33-244 | LG 786 |
| 0000-400-1302 | 33-243 | LG 786 |
| 0000-400-1306 | 33-243 | LG 786 |
| 0000-951-2911 | 56-025 | LG 687 |
| 0000-955-0801 | 04-009 | LG 686 |
| 000-955-0801 | 04-009 | LG 686 |
| 000-997-1501 | 55-996 | LG 988 |
| 1082 | 55-231 | LG 212 |
| 1100-430-0202 | 55-111 | LG 1026 |
| 110590 | 56-011 | LG 687 |
| 1106-644-1500 | 56-025 | LG 687 |
| 1106-664-1501 | 56-025 | LG 687 |
| 1107 195 3400 | 31-914 | LG 930 |
| 1107-195-3400 | 31-914 | LG 930 |
| 1110 358 1800 | 07-205 | LG 779 |
| 1110-120-1601 | 30-154 | LG 213 |
| 1110-121-5100 | 49-021 | LG 629 |
| 1110-258-1800 | 07-205 | LG 779 |
| 1110-358-1800 | 07-205 | LG 779 |
| 1110-430-0202 | 55-111 | LG 1026 |
| 1110-430-0210 | 55-111 | LG 1026 |
| 1110-664-1500 | 56-008 | LG 687 |
| 1110-664-1600 | 56-008 | LG 687 |
| 1114-121-7800 | 55-342 | LG 627 |
| 1115 350 3503 | 07-109 | LG 778 |
| 1115 350 3503 | 07-217 | LG 778 |
| 1115-350-3503 | 07-109 | LG 778 |
| 1115-350-3503 | 07-217 | LG 778 |
| 1116-121-5100 | 49-021 | LG 629 |
| 1117 190 0601 | 43-699 | LG 936 |
| 1117 350 0500 | 56-019 | LG 772 |
| 1117 353 0503 | 56-019 | LG 772 |
| 1117 640 3600 | 56-018 | LG 690 |
| 1117 646 0600 | 56-018 | LG 690 |
| 1117-190-0061 | 43-699 | LG 936 |
| 1117-190-0601 | 43-699 | LG 936 |
| 1117-350-0500 | 56-019 | LG 772 |
| 1117-353-0503 | 56-019 | LG 772 |
| 1117-640-3600 | 56-018 | LG 690 |
| 1118 120 1611 | 55-236 | LG 213 |
| 1118 120 1615 | 55-236 | LG 213 |
| 1118 190 0600 | 43-694 | LG 936 |
| 1118 640 3600 | 56-018 | LG 690 |
| 1118 664 1600 | 56-011 | LG 687 |
| 1118-120-1610 | 55-236 | LG 213 |
| 1118-120-1611 | 55-236 | LG 213 |
| 1118-120-1615 | 55-236 | LG 213 |
| 1118-190-0600 | 43-694 | LG 936 |
| 1118-664-1600 | 56-011 | LG 687 |
| 1119-120-1611 | 55-236 | LG 213 |
| 1119-358-7700 | 07-007 | LG 689 |
| 1119-358-7701 | 07-007 | LG 689 |
| 1119-358-7702 | 07-135 | LG 762 |
| 1120 120 1600 | 30-155 | LG 213 |
| 1120 124 0800 | 30-155 | LG 213 |
| 1120 350 3500 | 07-109 | LG 778 |
| 1120 350 3500 | 07-217 | LG 778 |
| 1120 664 1500 | 56-011 | LG 687 |
| 1120-120-1600 | 30-155 | LG 213 |
| 1120-121-7802 | 55-343 | LG 627 |
| 1120-124-0800 | 30-155 | LG 213 |
| 1120-350-3500 | 07-109 | LG 778 |
| 1120-350-3500 | 07-217 | LG 778 |
| 1120-350-3501 | 07-217 | LG 778 |
| 1120-664-1500 | 56-011 | LG 687 |
| 1121 195 3400 | 31-914 | LG 930 |
| 1121-120-1617 | 30-337 | LG 213 |
| 1121-120-1618 | 30-337 | LG 213 |
| 1121-195-3400 | 31-914 | LG 930 |
| 1121-430-0200 | 55-111 | LG 1026 |
| 1122-400-1314 | 33-245 | LG 786 |
| 1122-664-2200 | 56-023 | LG 687 |
| 1122-664-4500 | 56-023 | LG 687 |
| 1123-195-0400 | 31-006 | LG 935 |
| 1123-358-7701 | 07-075 | LG 763 |
| 1123-358-7702 | 07-075 | LG 763 |
| 1123-400-1301 | 33-243 | LG 786 |
| 1123-640-1900 | 56-024 | LG 687 |
| 1123-664-1400 | 56-024 | LG 687 |
| 1124-195-7200 | 31-011 | LG 931 |
| 1124-350-0500 | 07-132 | LG 773 |
| 1124-358-7700 | 07-136 | LG 762 |
| 1125 640 7100 | 56-030 | LG 693 |
| 1125 640 7110 | 56-030 | LG 693 |
| 1125-007-1021 | 56-023 | LG 687 |
| 1125-195-7200 | 31-092 | LG 931 |
| 1125-640-1900 | 56-023 | LG 687 |
| 1125-640-7100 | 56-030 | LG 693 |
| 1125-640-7110 | 56-030 | LG 693 |
| 1125-647-2400 | 56-030 | LG 693 |
| 1127-358-7702 | 07-072 | LG 763 |
| 1128-195-0400 | 31-010 | LG 935 |
| 1128-358-7701 | 07-134 | LG 763 |
| 1129-890-3401 | 57-005 | LG 677 |
| 1129-890-3401 | 57-016 | LG 677 |
| 1130 124 0800 | 30-156 | LG 213 |
| 1130 124 0801 | 30-156 | LG 213 |
| 1130 350 0500 | 07-131 | LG 772 |
| 1130-124-0800 | 30-156 | LG 213 |
| 1130-350-0500 | 07-131 | LG 772 |
| 115-350-3503 | 07-109 | LG 778 |
| 119 358 7700 | 07-007 | LG 689 |
| 301272 | 40-144 | LG 587 |
| 309891 | 55-231 | LG 212 |
| 35RS 100R | 58-012 | LG 957 |
| 4002-710-2191 | 55-993 | LG 988 |
| 4002-713-3017A | 55-971 | LG 988 |
| 4002-713-7001 | 55-973 | LG 988 |
| 4003-713-8301 | 55-972 | LG 988 |
| 4007000 | 77-355-1 | LG 865 |
| 4111 007 1001 | 55-460-1 | LG 1026 |
| 4111-007-1001 | 55-460-1 | LG 1026 |
| 4112 350 0500 | 55-109 | LG 773 |
| 4112 350 3500 | 55-110 | LG 765 |
| 4112-124-0801 | 55-231 | LG 212 |
| 4112-195-1600 | 43-685 | LG 936 |
| 4112-350-0500 | 55-109 | LG 773 |
| 4112-350-3500 | 55-110 | LG 765 |
| 4114 350 0502 | 55-109 | LG 773 |
| 4114 350 0504 | 55-109 | LG 773 |
| 4114-124-0800 | 55-231 | LG 212 |
| 4114-350-0500 | 55-109 | LG 773 |
| 4114-350-0502 | 55-109 | LG 773 |
| 4114-350-0504 | 55-109 | LG 773 |
| 4117-122-9402 | 55-333 | LG 633 |
| 4126-350-0501C | 55-102 | LG 773 |
| 4126-350-501C | 55-102 | LG 773 |
| 4128 350 0504 | 55-102 | LG 773 |
| 4128 350 0505 | 55-102 | LG 773 |
| 41283500504 | 55-102 | LG 773 |
| 4128-350-0504 | 55-102 | LG 773 |
| 4128-358-0800 | 07-074 | LG 1026 |
| 4130 350 6200 | 07-073 | LG 768 |
| 4130-350-6200 | 07-073 | LG 768 |
| 4133 713 4101 | 40-141 | LG 585 |
| 4133 713 4102 | 40-141 | LG 585 |
| 4133-121-2700 | 49-020 | LG 631 |
| 4133-350-0501 | 55-102 | LG 773 |
| 4134-141-0300 | 55-079 | LG 214 |
| 4137 124 1500 | 30-956 | LG 216 |
| 4137-124-1500 | 30-956 | LG 216 |
| 4144-350-0502 | 55-109 | LG 773 |
| 4201-140-1801 | 55-242 | LG 214 |
| 4201-140-1805 | 30-416 | LG 214 |
| 4201-140-1805 | 55-240 | LG 214 |
| 4201-141-0300 | 55-240 | LG 214 |
| 4201-141-0300 | 55-263 | LG 214 |
| 4201-141-0310 | 55-241 | LG 214 |
| 4203-141-0300 | 30-416 | LG 214 |
| 4203-141-0300 | 30-837 | LG 214 |
| 4203-141-0301 | 30-137 | LG 214 |
| 4203-141-0301A | 30-137 | LG 214 |
| 4203-141-0310 | 55-247 | LG 214 |
| 4203-350-7600 | 07-156 | LG 761 |
| 4221-007-1002 | 55-262 | LG 215 |
| 4221-140-1800 | 55-243 | LG 215 |
| 4221-140-440 | 55-248 | LG 215 |
| 4221-140-4400 | 55-248 | LG 215 |
| 4221-141-0310 | 55-246 | LG 214 |
| 4223-007-1010 | 30-153 | LG 216 |
| 4223-140-1800 | 30-838 | LG 215 |
| 4223-140-1800 | 55-244 | LG 215 |
| 4223-141-0300 | 30-153 | LG 216 |
| 4223-141-0300 | 30-839 | LG 215 |
| 4223-141-0300 | 55-249 | LG 215 |
| 4223-141-0600 | 55-245 | LG 215 |
| 4228-710-6050A | 59-200 | LG 783 |
| 4228-710-6051A | 59-201 | LG 783 |
| 4237-710-6051 | 59-202 | LG 783 |
| 4237-710-6052 | 59-203 | LG 783 |
| 4238-140-1800 | 30-333 | LG 216 |
| 4238-140-4401 | 30-333 | LG 216 |
| 4238-140-4402 | 30-333 | LG 216 |
| 4238-141-0300 | 30-333 | LG 216 |
| 4238-141-300B | 30-333 | LG 216 |
| 4301-141-033 | 30-640 | LG 210 |
| 55-241-55-241 | 55-240 | LG 214 |
| 55-249 | 30-153 | LG 216 |
| 9490-000-7840 | 75-272 | LG 684 |
| 94900007850 | 15-780 | LG 320 |
| 9490-000-7850 | 75-272 | LG 684 |
| 94900007851 | 15-781 | LG 320 |
| 9490-000-7851 | 75-273 | LG 320 |
| 94900007891 | 15-782 | LG 320 |
| 94900007900A | 15-783 | LG 320 |
| 94900007901A | 15-784 | LG 320 |
| 94900007915 | 15-785 | LG 320 |
| 94900007920 | 15-786 | LG 320 |
| 9550801 | 04-009 | LG 686 |
| 9646-945-0490 | 56-023 | LG 687 |
| **SUTECH** | | |
| 2107/09 | 96-632* | LG 559 |
| 2107/10 | 96-632* | LG 559 |
| 2107/11 | 91-802 | LG 560 |
| 2107/11 | 96-632* | LG 559 |
| **SWISHER** | | |
| 10358 | 92-147 | LG 559 |
| 12504 | 392-677* | LG 559 |
| 12925 | 392-677* | LG 559 |
| 15767 | 392-677* | LG 559 |
| 20186 | 391-574* | LG 559 |
| 20186 | 91-574* | LG 559 |
| 3293 | 391-574* | LG 559 |
| 3293 | 91-574* | LG 559 |
| 3295 | 91-573* | LG 559 |
| 4218 | 72-756 | LG 1046 |
| 5059 | 91-573* | LG 559 |
| 660 | 91-732 | LG 559 |
| 9004 | 391-574* | LG 559 |
| 9004 | 91-050 | LG 559 |
| 9004 | 91-574* | LG 559 |
| 9005 | 91-051 | LG 559 |
| 9036 | 91-051 | LG 559 |
| 9037 | 391-574* | LG 559 |
| 9037 | 91-050 | LG 559 |
| 9037 | 91-574* | LG 559 |
| B32S | 91-051 | LG 559 |
| **T.G. & Y.** | | |
| 754-0145 | 75-145 | LG 300 |
| 754-0266 | 75-016 | LG 301 |
| 954-0145 | 75-145 | LG 300 |
| 954-0145A | 75-145 | LG 300 |

X



* OREGON® Gator™ replacement blade

| OEM No. | OREGON | Page |
|---|---|---|
| 954-015A | 75-145 | LG 300 |
| 954-0266 | 75-016 | LG 301 |
| 954-0266A | 75-016 | LG 301 |
| **TANAKA** | | |
| 140-5 | 55-804-1 | LG 994 |
| 140-7 | 55-807 | LG 994 |
| 301272 | 40-141 | LG 585 |
| 323619 | 40-141 | LG 585 |
| 43533110200 | 40-141 | LG 585 |
| 43533110200 | 40-503 | LG 589 |
| 447-25108-200 | 49-020 | LG 631 |
| 578-25006-200 | 55-342 | LG 627 |
| 5950165C91 | 55-106 | LG 773 |
| 5950165C91 | 55-132 | LG 773 |
| 595-0165C-91 | 55-106 | LG 773 |
| 5950165C92 | 55-106 | LG 773 |
| 595-0165-C-92 | 55-106 | LG 773 |
| 5950423Q90 | 55-132 | LG 773 |
| 5950423Q910 | 55-132 | LG 773 |
| 595-0650-A-90 | 55-106 | LG 773 |
| 603-25001-200 | 49-021 | LG 629 |
| 650-25001-900 | 49-816 | LG 612 |
| 650-25001-910 | 49-816 | LG 612 |
| 650-25010-900 | 49-816 | LG 612 |
| 650-25011-900 | 49-816 | LG 612 |
| 650-25013-900 | 49-816 | LG 612 |
| 650-25022-900 | 49-816 | LG 612 |
| 652-25001-900 | 49-812 | LG 612 |
| 652-25001-910 | 49-812 | LG 612 |
| 652-25006-900 | 49-812 | LG 612 |
| 652-25012-900 | 49-835 | LG 611 |
| 652-25012-910 | 49-835 | LG 611 |
| 6684620 | 07-092 | LG 778 |
| 6685139 | 07-088 | LG 768 |
| 6690192 | 40-141 | LG 585 |
| 6690192 | 40-503 | LG 589 |
| 6691173 | 07-094 | LG 778 |
| 6692273 | 07-094 | LG 778 |
| 6750404280 | 07-092 | LG 778 |
| 695-000510 | 55-018 | LG 771 |
| **TECUMSEH** | | |
| 1010 | 50-650 | LG 599 |
| 1021 | 50-650 | LG 599 |
| 1022 | 50-650 | LG 599 |
| 1034 | 50-650 | LG 599 |
| 1035 | 50-650 | LG 599 |
| 1036 | 50-650 | LG 599 |
| 1056 | 50-650 | LG 599 |
| 1059 | 50-650 | LG 599 |
| 1060 | 50-650 | LG 599 |
| 1099 | 50-642 | LG 598 |
| 1107 | 50-646 | LG 598 |
| 1126 | 50-650 | LG 599 |
| 1135 | 50-647 | LG 598 |
| 1137 | 50-650 | LG 599 |
| 1159 | 50-646 | LG 598 |
| 1277 | 50-650 | LG 599 |
| 1278 | 50-650 | LG 599 |
| 1279 | 50-650 | LG 599 |
| 1432 | 50-642 | LG 598 |
| 1471 | 50-647 | LG 598 |
| 1474 | 50-650 | LG 599 |
| 1483 | 50-647 | LG 598 |
| 1499 | 50-650 | LG 599 |
| 1500 | 50-650 | LG 599 |
| 1529 | 50-650 | LG 599 |
| 1538 | 50-649 | LG 598 |
| 1548 | 50-650 | LG 599 |
| 1549 | 50-650 | LG 599 |
| 1550 | 50-650 | LG 599 |
| 1552 | 50-650 | LG 599 |
| 1554 | 50-650 | LG 599 |
| 1555 | 50-650 | LG 599 |
| 1558 | 50-650 | LG 599 |
| 1604 | 50-650 | LG 599 |
| 1610 | 50-650 | LG 599 |
| 1619 | 50-650 | LG 599 |
| 1623 | 50-650 | LG 599 |
| 1650 | 50-650 | LG 599 |
| 1652 | 50-650 | LG 599 |
| 1670 | 50-649 | LG 598 |
| 226 | 50-650 | LG 599 |
| 24449 | 07-001 | LG 765 |
| 25548 | 49-041-0 | LG 749 |
| 26208 | 49-041-0 | LG 749 |
| 26750 | 50-204 | LG 758 |
| 26750A | 50-204 | LG 758 |
| 26752 | 49-402 | LG 758 |
| 26754 | 49-153 | LG 758 |
| 26754A | 49-153 | LG 758 |
| 26756 | 49-402 | LG 758 |
| 26762 | 35-003 | LG 809 |
| 26819 | 35-003 | LG 809 |
| 27110 | 49-084 | LG 759 |
| 27110A | 49-084 | LG 759 |
| 27118 | 49-201 | LG 608 |
| 27141 | 49-402 | LG 758 |
| 27181 | 35-003 | LG 809 |
| 27181A | 35-003 | LG 809 |
| 27181B | 35-003 | LG 809 |
| 27181C | 35-003 | LG 809 |
| 27222 | 31-904 | LG 930 |
| 27226 | 31-904 | LG 930 |
| 27234 | 49-120 | LG 759 |
| 27234A | 49-120 | LG 759 |
| 27247 | 02-404 | LG 790 |
| 27263 | 31-904 | LG 930 |
| 27272 | 49-150 | LG 758 |
| 27272A | 49-150 | LG 758 |
| 27278 | 35-003 | LG 809 |
| 27578 | 49-201 | LG 608 |
| 27625 | 49-667 | LG 750 |
| 27689 | 07-400 | LG 767 |
| 27803 | 07-400 | LG 767 |
| 27904 | 50-032 | LG 759 |
| 27915 | 49-411 | LG 759 |
| 27915A | 49-411 | LG 759 |
| 27930A | 49-157 | LG 759 |
| 27948 | 33-008 | LG 789 |
| 27948 | 33-606 | LG 789 |
| 27948A | 33-008 | LG 789 |
| 27948A | 33-606 | LG 789 |
| 28269 | 35-016 | LG 809 |
| 28614 | 35-003 | LG 809 |
| 28641 | 49-201 | LG 608 |
| 28863 | 35-003 | LG 809 |
| 28879 | 49-201 | LG 608 |
| 28899 | 35-016 | LG 809 |
| 28938 | 50-032 | LG 759 |
| 28938A | 50-032 | LG 759 |
| 28938B | 50-032 | LG 759 |
| 28938C | 50-032 | LG 759 |
| 29155 | 49-201 | LG 608 |
| 29157 | 49-201 | LG 608 |
| 29523 | 50-206 | LG 758 |
| 29632 | 33-363 | LG 787 |
| 29633 | 35-008 | LG 808 |
| 29683 | 07-400 | LG 767 |
| 29775 | 49-016 | LG 759 |
| 29776 | 49-014 | LG 759 |
| 29780011 | 31-067 | LG 935 |
| 29923 | 30-083 | LG 219 |
| 29961 | 30-083 | LG 219 |
| 30188 | 49-016 | LG 759 |
| 30226 | 49-016 | LG 759 |
| 30226 | 49-411 | LG 759 |
| 30359 | 49-201 | LG 608 |
| 30546 | 33-363 | LG 787 |
| 30547A | 33-008 | LG 789 |
| 30547A | 33-606 | LG 789 |
| 30548B | 33-008 | LG 789 |
| 30548B | 33-606 | LG 789 |
| 30560 | 33-363 | LG 787 |
| 30560A | 33-363 | LG 787 |
| 30604 | 30-070 | LG 216 |
| 30684 | 50-206 | LG 758 |
| 30727 | 30-070 | LG 216 |
| 30727 | 30-822 | LG 216 |
| 30804 | 30-081 | LG 205 |
| 30874 | 35-001 | LG 806 |
| 30911 | 35-001 | LG 806 |
| 30983 | 49-201 | LG 608 |
| 30996 | 35-003 | LG 809 |
| 31390 | 49-201 | LG 608 |
| 31393 | 49-201 | LG 608 |
| 31394 | 49-201 | LG 608 |
| 31688 | 49-014 | LG 759 |
| 31688A | 49-014 | LG 759 |
| 31700 | 30-205 | LG 219 |
| 31700A | 30-205 | LG 219 |
| 31840 | 49-025 | LG 629 |
| 31840 | 49-840 | LG 609 |
| 31840 | 49-841 | LG 626 |
| 31840 | 49-916 | LG 629 |
| 31840 | 53-006 | LG 632 |
| 31925 | 30-082 | LG 205 |
| 32008 | 30-080 | LG 205 |
| 32008 | 30-819 | LG 205 |
| 32043 | 35-003 | LG 809 |
| 32043A | 35-003 | LG 809 |
| 32043A | 35-006 | LG 808 |
| 32043B | 35-006 | LG 808 |
| 32080 | 33-333 | LG 786 |
| 32089 | 33-320-0 | LG 731 |
| 32164 | 07-001 | LG 765 |
| 32247 | 35-003 | LG 809 |
| 32401 | 35-028 | LG 810 |
| 32439 | 07-001 | LG 765 |
| 32510 | 33-716 | LG 921 |
| 32641 | 50-407 | LG 758 |
| 32641A | 50-407 | LG 758 |
| 32641B | 50-407 | LG 758 |
| 32641C | 50-407 | LG 758 |
| 32648 | 35-032 | LG 809 |
| 32648A | 35-032 | LG 809 |
| 32649 | 49-016 | LG 759 |
| 32649A | 49-016 | LG 759 |
| 32754 | 49-120 | LG 759 |
| 32817 | 33-716 | LG 921 |
| 32906 | 30-941 | LG 219 |
| 32972 | 30-091 | LG 217 |
| 32985 | 35-005 | LG 806 |
| 33015 | 50-548 | LG 759 |
| 33015A | 50-548 | LG 759 |
| 33051 | 49-152 | LG 758 |
| 33202 | 33-712 | LG 921 |
| 33233A | 49-150 | LG 758 |
| 33235 | 49-150 | LG 758 |
| 33235A | 49-150 | LG 758 |
| 33236B | 50-407 | LG 758 |
| 33237B | 49-150 | LG 758 |
| 33238 | 50-407 | LG 758 |
| 33238A | 50-407 | LG 758 |
| 33238B | 50-407 | LG 758 |
| 33238C | 50-407 | LG 758 |
| 33238D | 49-150 | LG 758 |
| 33238D | 49-152 | LG 758 |
| 33238D | 50-407 | LG 758 |
| 33238E | 50-407 | LG 758 |
| 33239A | 49-150 | LG 758 |
| 33240B | 49-150 | LG 758 |
| 33263 | 49-403 | LG 758 |
| 33268 | 30-100 | LG 217 |
| 33268 | 30-841 | LG 217 |
| 33270 | 50-033 | LG 759 |
| 33279 | 50-302 | LG 758 |
| 33279A | 50-302 | LG 758 |
| 33279B | 50-302 | LG 758 |
| 33279C | 50-302 | LG 758 |
| 33279D | 50-302 | LG 758 |
| 33279E | 50-302 | LG 758 |
| 33279F | 50-302 | LG 758 |
| 33279G | 49-150 | LG 758 |
| 33279G | 50-302 | LG 758 |
| 33279H | 50-302 | LG 758 |
| 33279J | 49-150 | LG 758 |
| 33279J | 50-302 | LG 758 |
| 33279L | 49-150 | LG 758 |
| 33279L | 50-302 | LG 758 |
| 33280 | 35-015 | LG 810 |
| 33280A | 35-015 | LG 810 |
| 3329B | 33-738 | LG 921 |
| 33329 | 33-738 | LG 921 |
| 33329A | 33-738 | LG 921 |
| 33329B | 33-738 | LG 921 |
| 33329C | 33-738 | LG 921 |
| 33329D | 33-738 | LG 921 |
| 33329E | 33-738 | LG 921 |
| 33329F | 33-738 | LG 921 |
| 33432 | 33-527 | LG 928 |
| 33519 | 33-738 | LG 921 |
| 33519A | 33-738 | LG 921 |
| 33519B | 33-738 | LG 921 |
| 33542 | 33-738 | LG 921 |
| 33542A | 33-738 | LG 921 |
| 33554 | 50-548 | LG 759 |
| 33554A | 50-548 | LG 759 |
| 33591B | 33-738 | LG 921 |
| 33605 | 33-712 | LG 921 |
| 33652 | 35-001 | LG 806 |
| 33670 | 49-157 | LG 759 |
| 33670A | 49-157 | LG 759 |
| 33679 | 07-392 | LG 767 |
| 33683B | 49-150 | LG 758 |
| 33697 | 35-032 | LG 809 |
| 33697A | 35-032 | LG 809 |
| 33697A0 | 35-032 | LG 809 |
| 33697AO | 35-032 | LG 809 |
| 33740D | 49-150 | LG 758 |
| 33740D | 49-152 | LG 758 |
| 33835 | 33-716 | LG 921 |
| 33844 | 33-526 | LG 928 |
| 33861 | 49-403 | LG 758 |
| 339 | 50-650 | LG 599 |
| 34041 | 50-033 | LG 759 |
| 34041A | 50-033 | LG 759 |
| 34041B | 50-033 | LG 759 |
| 34042 | 50-302 | LG 758 |
| 34042A | 50-302 | LG 758 |
| 34185 | 35-015 | LG 810 |
| 34185A | 35-015 | LG 810 |
| 34185B | 35-015 | LG 810 |
| 34200A | 30-142 | LG 217 |
| 34200B | 30-142 | LG 217 |
| 34279 | 07-107 | LG 774 |
| 34279A | 07-107 | LG 774 |
| 34279B | 07-107 | LG 774 |
| 34340 | 30-117 | LG 219 |
| 34443 | 33-346 | LG 786 |
| 34443A | 33-346 | LG 786 |
| 34443B | 33-346 | LG 786 |
| 34443C | 33-346 | LG 786 |
| 34443D | 33-346 | LG 786 |
| 34673 | 35-015 | LG 810 |
| 34690A | 49-156 | LG 759 |
| 34700 | 30-142 | LG 217 |
| 34700A | 30-142 | LG 217 |
| 34700B | 30-142 | LG 217 |

X

# 2019 OEM X-Reference

| OEM No. | OREGON | Page |
|---|---|---|
| **TECUMSEH** | | |
| 34782 | 30-141 | LG 217 |
| 34782 | 30-641 | LG 198 |
| 34782A | 30-141 | LG 217 |
| 34782B | 30-141 | LG 217 |
| 34783 | 30-116 | LG 219 |
| 34923 | 50-033 | LG 759 |
| 34923A | 50-033 | LG 759 |
| 35062 | 33-089 | LG 946 |
| 35066 | 30-301 | LG 217 |
| 35066 | 30-801 | LG 217 |
| 35066 | 69-034 | LG 217 |
| 35096 | 33-738 | LG 921 |
| 35135 | 33-343 | LG 787 |
| 35135A | 33-343 | LG 787 |
| 35135B | 33-343 | LG 787 |
| 35261 | 50-204 | LG 758 |
| 35331B | 49-150 | LG 758 |
| 35355 | 07-314 | LG 773 |
| 35403 | 30-111 | LG 217 |
| 35403 | 30-842 | LG 217 |
| 35404 | 30-951 | LG 219 |
| 35500 | 30-112 | LG 218 |
| 35663 | 35-015 | LG 810 |
| 35763 | 33-712 | LG 921 |
| 35763A | 33-712 | LG 921 |
| 35771 | 35-032 | LG 809 |
| 35771A | 35-032 | LG 809 |
| 35865 | 49-157 | LG 759 |
| 35872 | 49-150 | LG 758 |
| 35876 | 33-712 | LG 921 |
| 35899 | 33-768-0 | LG 926 |
| 35997 | 49-150 | LG 758 |
| 35997 | 49-152 | LG 758 |
| 36045 | 49-085 | LG 769 |
| 36045A | 49-085 | LG 769 |
| 36046 | 30-740 | LG 218 |
| 36046 | 30-807 | LG 218 |
| 36262 | 69-281 | LG 814 |
| 36262 | 83-013 | LG 817 |
| 36262 | 83-401 | LG 817 |
| 36262 | 83-501 | LG 817 |
| 36264 | 33-711 | LG 921 |
| 36264 | 33-791 | LG 921 |
| 36343 | 33-712 | LG 921 |
| 36344 | 33-150 | LG 787 |
| 36344A | 33-150 | LG 787 |
| 36356 | 30-024 | LG 218 |
| 36356 | 30-850 | LG 218 |
| 36357 | 30-952 | LG 219 |
| 36365 | 83-013 | LG 817 |
| 36377 | 33-711 | LG 921 |
| 36377 | 33-791 | LG 921 |
| 36435 | 83-013 | LG 817 |
| 36439 | 49-150 | LG 758 |
| 36442 | 49-150 | LG 758 |
| 36443 | 50-548 | LG 759 |
| 36444 | 49-150 | LG 758 |
| 36447 | 49-150 | LG 758 |
| 36450 | 49-150 | LG 758 |
| 36450A | 49-150 | LG 758 |
| 36450B | 49-150 | LG 758 |
| 36463 | 33-712 | LG 921 |
| 36563 | 69-281 | LG 814 |
| 36563 | 83-013 | LG 817 |
| 36563 | 83-401 | LG 817 |
| 36680 | 33-712 | LG 921 |
| 36745 | 30-030 | LG 218 |
| 36745 | 30-840 | LG 218 |
| 36745 | 514316 | |
| 36795 | 33-711 | LG 921 |
| 36795 | 33-791 | LG 921 |
| 36853 | 33-713 | LG 921 |
| 36853 | 33-739 | LG 921 |
| 36905 | 30-031 | LG 218 |
| 36905 | 30-817 | LG 218 |
| 36905 | 69-331 | LG 218 |
| 36914 | 33-713 | LG 921 |
| 36914 | 33-739 | LG 921 |
| 36959 | 33-768-0 | LG 926 |
| 36961 | 69-281 | LG 814 |
| 36961 | 83-013 | LG 817 |
| 36961 | 83-401 | LG 817 |
| 3700 | 33-738 | LG 921 |
| 37000 | 33-738 | LG 921 |
| 37050 | 33-527 | LG 928 |
| 37052A | 33-527 | LG 928 |
| 37105 | 33-738 | LG 921 |
| 37130 | 50-204 | LG 758 |
| 37137 | 33-150 | LG 787 |
| 37360 | 30-443 | LG 218 |
| 37425 | 33-713 | LG 921 |
| 37425 | 33-739 | LG 921 |
| 37442 | 33-768-0 | LG 926 |
| 37609 | 50-204 | LG 758 |
| 37651 | 45-118 | LG 760 |
| 386 | 50-650 | LG 599 |
| 39-910 | 49-201 | LG 608 |
| 39-931 | 49-201 | LG 608 |
| 418 | 50-650 | LG 599 |
| 419 | 50-650 | LG 599 |
| 422 | 50-650 | LG 599 |
| 433 | 50-650 | LG 599 |
| 438 | 50-650 | LG 599 |
| 445 | 50-650 | LG 599 |
| 450247 | 30-711 | LG 218 |
| 5001 | 50-655 | LG 600 |
| 5002 | 50-659 | LG 600 |
| 5005 | 50-652 | LG 599 |
| 5017 | 50-655 | LG 600 |
| 5023 | 50-651 | LG 599 |
| 5028 | 50-653 | LG 599 |
| 5036 | 50-659 | LG 600 |
| 5043 | 50-654 | LG 599 |
| 5044 | 50-653 | LG 599 |
| 5048 | 50-651 | LG 599 |
| 5087 | 50-653 | LG 599 |
| 5097 | 50-655 | LG 600 |
| 5128 | 50-655 | LG 600 |
| 5165 | 50-655 | LG 600 |
| 5196 | 50-654 | LG 599 |
| 5199 | 50-656 | LG 600 |
| 5243 | 50-653 | LG 599 |
| 5252 | 50-666 | LG 601 |
| 5274 | 50-641 | LG 598 |
| 5285 | 50-640 | LG 598 |
| 5313 | 50-659 | LG 600 |
| 5333 | 50-653 | LG 599 |
| 590214 | 31-904 | LG 930 |
| 590284 | 31-904 | LG 930 |
| 590288 | 31-904 | LG 930 |
| 590289 | 31-904 | LG 930 |
| 590306 | 31-904 | LG 930 |
| 590339 | 31-904 | LG 930 |
| 590387 | 31-904 | LG 930 |
| 590387A | 31-904 | LG 930 |
| 590388 | 31-904 | LG 930 |
| 590420 | 31-051 | LG 924 |
| 590420A | 31-051 | LG 924 |
| 590449 | 31-051 | LG 924 |
| 590458 | 31-051 | LG 924 |
| 590472 | 31-117 | LG 925 |
| 590537 | 31-051 | LG 924 |
| 590557 | 31-051 | LG 924 |
| 5905574 | 31-907 | LG 929 |
| 590558 | 31-051 | LG 924 |
| 590574 | 31-907 | LG 929 |
| 590595 | 31-051 | LG 924 |
| 590618 | 31-067 | LG 935 |
| 590618A | 31-067 | LG 935 |
| 590646 | 31-117 | LG 925 |
| 590648 | 31-117 | LG 925 |
| 590671 | 31-047 | LG 925 |
| 590672 | 31-116 | LG 925 |
| 590686 | 31-050 | LG 924 |
| 590694 | 31-050 | LG 924 |
| 590704 | 31-047 | LG 925 |
| 590706 | 31-051 | LG 924 |
| 590707 | 31-117 | LG 925 |
| 590733 | 31-116 | LG 925 |
| 590737 | 31-050 | LG 924 |
| 590742 | 31-117 | LG 925 |
| 590746 | 31-047 | LG 925 |
| 590748 | 31-047 | LG 925 |
| 590748A | 31-047 | LG 925 |
| 590749 | 31-116 | LG 925 |
| 590749A | 31-116 | LG 925 |
| 590784 | 31-117 | LG 925 |
| 590787 | 31-117 | LG 925 |
| 590788 | 31-047 | LG 925 |
| 590789 | 31-116 | LG 925 |
| 610768 | 33-363 | LG 787 |
| 610935 | 33-420 | LG 741 |
| 610961 | 02-404 | LG 790 |
| 610995 | 02-406 | LG 790 |
| 611004 | 02-403 | LG 790 |
| 611154 | 02-405 | LG 790 |
| 611161 | 33-420 | LG 741 |
| 630748 | 53-006 | LG 632 |
| 630752 | 49-239 | LG 609 |
| 630759 | 49-239 | LG 609 |
| 630811 | 49-239 | LG 609 |
| 630823 | 49-239 | LG 609 |
| 630906 | 49-239 | LG 609 |
| 630914 | 49-239 | LG 609 |
| 630932 | 49-039 | LG 629 |
| 630932A | 49-039 | LG 629 |
| 630954 | 49-239 | LG 609 |
| 630974 | 49-239 | LG 609 |
| 630974A | 49-239 | LG 609 |
| 630978 | 49-002 | LG 623 |
| 630980 | 49-039 | LG 629 |
| 630981 | 49-239 | LG 609 |
| 631010 | 49-039 | LG 629 |
| 631011 | 49-239 | LG 609 |
| 631011A | 49-239 | LG 609 |
| 631021 | 49-025 | LG 629 |
| 631021 | 49-916 | LG 629 |
| 631021A | 49-025 | LG 629 |
| 631021A | 49-916 | LG 629 |
| 631021B | 49-025 | LG 629 |
| 631021B | 49-916 | LG 629 |
| 631023 | 49-009 | LG 625 |
| 631027 | 53-005 | LG 632 |
| 631028 | 49-025 | LG 629 |
| 631028 | 49-841 | LG 626 |
| 631028 | 49-916 | LG 629 |
| 631028 | 53-006 | LG 632 |
| 631028A | 49-025 | LG 629 |
| 631028A | 49-841 | LG 626 |
| 631028A | 49-916 | LG 629 |
| 631028A | 53-006 | LG 632 |
| 631029 | 49-025 | LG 629 |
| 631029 | 49-029 | LG 609 |
| 631029 | 49-841 | LG 626 |
| 631029 | 49-916 | LG 629 |
| 631029 | 53-005 | LG 632 |
| 631029 | 53-006 | LG 632 |
| 631050 | 49-039 | LG 629 |
| 631051 | 49-239 | LG 609 |
| 631069 | 49-002 | LG 623 |
| 631088 | 49-239 | LG 609 |
| 631111 | 49-239 | LG 609 |
| 631121 | 49-239 | LG 609 |
| 631131 | 49-239 | LG 609 |
| 631137 | 49-239 | LG 609 |
| 631141 | 49-239 | LG 609 |
| 631146 | 49-239 | LG 609 |
| 631162 | 49-239 | LG 609 |
| 631180 | 49-025 | LG 629 |
| 631180 | 49-841 | LG 626 |
| 631180 | 49-916 | LG 629 |
| 631180 | 53-005 | LG 632 |
| 631180 | 53-006 | LG 632 |
| 631193 | 49-239 | LG 609 |
| 631207 | 49-039 | LG 629 |
| 631208 | 49-239 | LG 609 |
| 631240 | 49-029 | LG 609 |
| 631388 | 49-039 | LG 629 |
| 631389 | 49-239 | LG 609 |
| 631397 | 49-039 | LG 629 |
| 631398 | 49-239 | LG 609 |
| 631432 | 49-039 | LG 629 |
| 631433 | 49-239 | LG 609 |
| 631472 | 49-039 | LG 629 |
| 631473 | 49-239 | LG 609 |
| 631584 | 49-229 | LG 609 |
| 631612 | 50-650 | LG 599 |
| 631700 | 49-307 | LG 625 |
| 631736 | 49-025 | LG 629 |
| 631736 | 49-916 | LG 629 |
| 631746 | 53-006 | LG 632 |
| 631748 | 50-650 | LG 599 |
| 631769 | 49-039 | LG 629 |
| 631770 | 49-239 | LG 609 |
| 631782 | 49-133 | LG 609 |
| 631831 | 50-650 | LG 599 |
| 631839 | 49-025 | LG 629 |
| 631839 | 49-229 | LG 609 |
| 631839 | 49-841 | LG 626 |
| 631839 | 49-916 | LG 629 |
| 631839 | 53-005 | LG 632 |
| 631839 | 53-006 | LG 632 |
| 631840 | 49-840 | LG 609 |
| 631862 | 49-025 | LG 629 |
| 631862 | 49-841 | LG 626 |
| 631862 | 49-916 | LG 629 |
| 631862 | 53-005 | LG 632 |
| 631862 | 53-006 | LG 632 |
| 631867 | 49-308 | LG 625 |
| 631884 | 53-005 | LG 632 |
| 631892 | 49-239 | LG 609 |
| 631893 | 49-002 | LG 623 |
| 631893 | 49-039 | LG 629 |
| 631893 | 49-239 | LG 609 |
| 631893A | 49-039 | LG 629 |
| 631893A | 49-239 | LG 609 |
| 631894 | 49-025 | LG 629 |
| 631894 | 49-841 | LG 626 |
| 631894 | 49-916 | LG 629 |
| 631894 | 53-005 | LG 632 |
| 631894 | 53-006 | LG 632 |
| 631902 | 50-650 | LG 599 |
| 631902A | 50-650 | LG 599 |
| 631906 | 53-005 | LG 632 |
| 631974 | 49-025 | LG 629 |
| 631974 | 49-841 | LG 626 |
| 631974 | 49-916 | LG 629 |
| 631974 | 53-005 | LG 632 |
| 631974 | 53-006 | LG 632 |
| 631976 | 49-025 | LG 629 |
| 631976 | 49-841 | LG 626 |
| 631976 | 49-916 | LG 629 |
| 631976 | 53-005 | LG 632 |
| 631976 | 53-006 | LG 632 |
| 631978 | 49-025 | LG 629 |
| 631978 | 49-841 | LG 626 |
| 631978 | 49-916 | LG 629 |
| 631978 | 49-978 | LG 609 |
| 631978 | 53-005 | LG 632 |

X



* OREGON® Gator™ replacement blade

## TECUMSEH

| OEM No. | OREGON | Page |
|---|---|---|
| 631978 | 53-006 | LG 632 |
| 632009 | 49-025 | LG 629 |
| 632009 | 49-841 | LG 626 |
| 632009 | 49-916 | LG 629 |
| 632009 | 53-005 | LG 632 |
| 632009 | 53-006 | LG 632 |
| 632019 | 49-009 | LG 625 |
| 632019A | 49-009 | LG 625 |
| 632046 | 50-650 | LG 599 |
| 632046A | 50-650 | LG 599 |
| 632047 | 49-034 | LG 630 |
| 632047A | 49-034 | LG 630 |
| 632050 | 50-650 | LG 599 |
| 632050A | 50-650 | LG 599 |
| 632051 | 50-650 | LG 599 |
| 632052 | 50-650 | LG 599 |
| 632053 | 50-650 | LG 599 |
| 632055 | 50-650 | LG 599 |
| 632070 | 50-650 | LG 599 |
| 632078 | 50-650 | LG 599 |
| 632078A | 50-650 | LG 599 |
| 632086 | 50-650 | LG 599 |
| 632087 | 50-650 | LG 599 |
| 632088 | 50-650 | LG 599 |
| 632098 | 50-650 | LG 599 |
| 632107 | 50-640 | LG 598 |
| 632107A | 50-640 | LG 598 |
| 632110 | 50-663 | LG 600 |
| 632113 | 50-662 | LG 600 |
| 632113A | 50-662 | LG 600 |
| 632208 | 50-647 | LG 598 |
| 632209 | 49-025 | LG 629 |
| 632209 | 49-841 | LG 626 |
| 632209 | 49-916 | LG 629 |
| 632209 | 53-005 | LG 632 |
| 632209 | 53-006 | LG 632 |
| 632214 | 50-650 | LG 599 |
| 632230 | 50-646 | LG 598 |
| 632235 | 49-025 | LG 629 |
| 632235 | 49-841 | LG 626 |
| 632235 | 49-916 | LG 629 |
| 632235 | 53-005 | LG 632 |
| 632235 | 53-006 | LG 632 |
| 632240 | 50-650 | LG 599 |
| 632272 | 50-646 | LG 598 |
| 632297 | 55-333 | LG 633 |
| 632315 | 55-342 | LG 627 |
| 632315A | 55-342 | LG 627 |
| 632320 | 49-812 | LG 612 |
| 632334 | 50-642 | LG 598 |
| 632334A | 50-642 | LG 598 |
| 632347 | 49-025 | LG 629 |
| 632347 | 49-230 | LG 609 |
| 632347 | 49-841 | LG 626 |
| 632347 | 49-916 | LG 629 |
| 632347 | 53-005 | LG 632 |
| 632347 | 53-006 | LG 632 |
| 632349 | 50-650 | LG 599 |
| 632355 | 49-025 | LG 629 |
| 632355 | 49-841 | LG 626 |
| 632355 | 49-916 | LG 629 |
| 632355 | 53-005 | LG 632 |
| 632355 | 53-006 | LG 632 |
| 632369 | 50-650 | LG 599 |
| 632370 | 50-663 | LG 600 |
| 632370A | 50-663 | LG 600 |
| 632380 | 50-650 | LG 599 |
| 632387 | 50-650 | LG 599 |
| 632387A | 50-650 | LG 599 |
| 632388 | 50-650 | LG 599 |
| 632389 | 50-650 | LG 599 |
| 632389A | 50-650 | LG 599 |
| 632391 | 50-650 | LG 599 |
| 632398 | 49-025 | LG 629 |
| 632398 | 49-841 | LG 626 |
| 632398 | 49-916 | LG 629 |
| 632398 | 53-006 | LG 632 |
| 632407 | 49-025 | LG 629 |
| 632407 | 49-841 | LG 626 |
| 632407 | 49-916 | LG 629 |
| 632407 | 53-005 | LG 632 |
| 632407 | 53-006 | LG 632 |
| 632420 | 50-650 | LG 599 |
| 632466 | 50-650 | LG 599 |
| 632467 | 50-650 | LG 599 |
| 632468 | 50-650 | LG 599 |
| 632559 | 49-025 | LG 629 |
| 632559 | 49-841 | LG 626 |
| 632559 | 49-916 | LG 629 |
| 632559 | 53-005 | LG 632 |
| 632559 | 53-006 | LG 632 |
| 632564 | 49-025 | LG 629 |
| 632564 | 49-841 | LG 626 |
| 632564 | 49-916 | LG 629 |
| 632564 | 53-005 | LG 632 |
| 632564 | 53-006 | LG 632 |
| 632575 | 50-650 | LG 599 |
| 632584 | 49-025 | LG 629 |
| 632584 | 49-841 | LG 626 |
| 632584 | 49-916 | LG 629 |
| 632584 | 53-005 | LG 632 |
| 632584 | 53-006 | LG 632 |
| 632589 | 50-647 | LG 598 |
| 632592 | 49-025 | LG 629 |
| 632592 | 49-841 | LG 626 |
| 632592 | 49-916 | LG 629 |
| 632592 | 53-005 | LG 632 |
| 632592 | 53-006 | LG 632 |
| 632610 | 50-650 | LG 599 |
| 632610A | 50-650 | LG 599 |
| 632611 | 50-650 | LG 599 |
| 632611A | 50-650 | LG 599 |
| 632614 | 50-649 | LG 598 |
| 632615 | 50-647 | LG 598 |
| 632622 | 49-230 | LG 609 |
| 632623B | 49-916 | LG 629 |
| 632635 | 50-650 | LG 599 |
| 632640 | 49-025 | LG 629 |
| 632640 | 49-841 | LG 626 |
| 632640 | 49-916 | LG 629 |
| 632640 | 53-005 | LG 632 |
| 632640 | 53-006 | LG 632 |
| 632644 | 50-650 | LG 599 |
| 632645 | 50-650 | LG 599 |
| 632646 | 50-650 | LG 599 |
| 632669 | 50-650 | LG 599 |
| 632670 | 50-650 | LG 599 |
| 632671 | 50-649 | LG 598 |
| 632671A | 50-649 | LG 598 |
| 632671B | 50-649 | LG 598 |
| 632671C | 50-649 | LG 598 |
| 632673 | 49-084 | LG 759 |
| 632678 | 50-650 | LG 599 |
| 632681 | 50-650 | LG 599 |
| 632689 | 50-656 | LG 600 |
| 632694 | 49-231 | LG 630 |
| 632694A | 49-231 | LG 630 |
| 632699 | 50-650 | LG 599 |
| 632733 | 50-650 | LG 599 |
| 632744 | 50-650 | LG 599 |
| 632747 | 50-650 | LG 599 |
| 632750 | 50-650 | LG 599 |
| 632760 | 49-019 | LG 609 |
| 632760 | 49-025 | LG 629 |
| 632760 | 49-841 | LG 626 |
| 632760 | 49-916 | LG 629 |
| 632760 | 53-005 | LG 632 |
| 632760 | 53-006 | LG 632 |
| 632760A | 49-019 | LG 609 |
| 632760B | 49-019 | LG 609 |
| 632769 | 50-650 | LG 599 |
| 632772 | 50-650 | LG 599 |
| 632795 | 50-650 | LG 599 |
| 632795A | 50-650 | LG 599 |
| 632807 | 49-916 | LG 629 |
| 632808 | 49-308 | LG 625 |
| 633014 | 50-650 | LG 599 |
| 640004 | 50-653 | LG 599 |
| 640014 | 50-653 | LG 599 |
| 640017 | 50-651 | LG 599 |
| 640017A | 50-651 | LG 599 |
| 640017B | 50-651 | LG 599 |
| 640020 | 50-652 | LG 599 |
| 640020A | 50-652 | LG 599 |
| 640020B | 50-652 | LG 599 |
| 640023 | 50-655 | LG 600 |
| 640025 | 50-653 | LG 599 |
| 640025A | 50-653 | LG 599 |
| 640025B | 50-653 | LG 599 |
| 640025C | 50-653 | LG 599 |
| 6400330 | 50-641 | LG 598 |
| 640034A | 50-641 | LG 598 |
| 640042 | 49-084 | LG 759 |
| 640051 | 50-655 | LG 600 |
| 640052 | 50-659 | LG 600 |
| 640054 | 50-659 | LG 600 |
| 640060 | 50-664 | LG 600 |
| 640060A | 50-664 | LG 600 |
| 640065 | 50-654 | LG 599 |
| 640065A | 50-654 | LG 599 |
| 640072 | 50-641 | LG 598 |
| 640072A | 50-641 | LG 598 |
| 640084 | 50-640 | LG 598 |
| 640084A | 50-640 | LG 598 |
| 640084B | 49-242 | LG 624 |
| 640084B | 50-640 | LG 598 |
| 640084B | 50-642 | LG 598 |
| 640104 | 50-651 | LG 599 |
| 640112 | 50-655 | LG 600 |
| 640117 | 50-651 | LG 599 |
| 640117B | 50-651 | LG 599 |
| 640140 | 50-655 | LG 600 |
| 640149 | 50-661 | LG 600 |
| 640152 | 50-655 | LG 600 |
| 640152A | 50-655 | LG 600 |
| 640159 | 50-641 | LG 598 |
| 640214 | 50-661 | LG 600 |
| 640222 | 50-664 | LG 600 |
| 640222A | 50-664 | LG 600 |
| 640259 | 49-085 | LG 769 |
| 640260 | 50-656 | LG 600 |
| 640260A | 50-656 | LG 600 |
| 640260B | 50-656 | LG 600 |
| 640278 | 50-661 | LG 600 |
| 640278A | 50-661 | LG 600 |
| 640298 | 50-666 | LG 601 |
| 640305 | 50-665 | LG 601 |
| 640306 | 50-664 | LG 600 |
| 640306A | 50-664 | LG 600 |
| 640330A | 50-641 | LG 598 |
| 640340 | 50-664 | LG 600 |
| 640346 | 50-665 | LG 601 |
| 640347 | 50-667 | LG 600 |
| 640349 | 50-659 | LG 600 |
| 640647 | 50-667 | LG 600 |
| 651053 | 49-239 | LG 609 |
| 703 | 50-650 | LG 599 |
| 730235 | 49-240 | LG 626 |
| 730235A | 49-240 | LG 626 |
| 730235B | 49-240 | LG 626 |
| 730326 | 33-713 | LG 921 |
| 730326 | 33-739 | LG 921 |
| 730527 | 07-102 | LG 774 |
| 730527A | 07-102 | LG 774 |
| 730600 | 33-186 | LG 789 |
| 730637 | 49-241 | LG 626 |
| 730637A | 49-241 | LG 626 |
| 730638 | 49-237 | LG 626 |
| 730639 | 49-238 | LG 626 |
| 740003B | 07-107 | LG 774 |
| 740007B | 02-403 | LG 790 |
| 740037 | 33-186 | LG 789 |
| 740037A | 33-186 | LG 789 |
| 740037B | 33-186 | LG 789 |
| 740083A | 30-031 | LG 218 |
| 790006 | 76-110 | LG 726 |
| 799021 | 76-110 | LG 726 |
| 8892 | 33-738 | LG 921 |
| 88921 | 33-738 | LG 921 |
| 88922 | 33-738 | LG 921 |
| 88923 | 33-738 | LG 921 |
| 88924 | 33-738 | LG 921 |
| 88925 | 33-738 | LG 921 |
| 8892S | 33-738 | LG 921 |

## TILDEN

| OEM No. | OREGON | Page |
|---|---|---|
| 10-002FW6.0 | 72-420 | LG 1047 |
| 10-008C | 70-344 | LG 959 |
| 10-009C | 70-328 | LG 959 |
| 10-010C | 70-343 | LG 958 |
| 10-014C | 70-326 | LG 959 |
| 10-021C | 70-307 | LG 960 |
| 10-022C | 70-312 | LG 959 |
| 10-027C | 70-314 | LG 959 |
| 10-034C | 70-302 | LG 959 |
| 10-039C | 70-306 | LG 960 |
| 10-046C | 70-329 | LG 960 |
| 10-049C | 70-335 | LG 959 |
| 10-059C | 70-308 | LG 959 |
| 10-090C | 70-320 | LG 959 |
| 10-100 | 71-103 | LG 956 |
| 10-102 | 71-110 | LG 956 |
| 10-105K | 71-800 | LG 956 |
| 10-106K | 71-801 | LG 956 |
| 10-108K | 71-816 | LG 956 |
| 10-110 | 71-104 | LG 956 |
| 10-111K | 71-098 | LG 956 |
| 10-113K | 71-099 | LG 956 |
| 10-126 | 71-105 | LG 957 |
| 10-128K | 71-273 | LG 957 |
| 10-129J | 71-274 | LG 956 |
| 10-129K | 71-109 | LG 956 |
| 10-130J | 71-275 | LG 956 |
| 10-130K | 71-400 | LG 956 |
| 10-131K | 71-276 | LG 956 |
| 10-145K | 71-500 | |
| 10-146K | 71-511 | LG 956 |
| 10-147K | 71-277 | LG 956 |
| 10-150K | 71-278 | |
| 10-161K | 71-600 | LG 956 |
| 10-162K | 71-101 | LG 956 |
| 10-163 | 71-102 | LG 956 |
| 10-165K | 71-602 | LG 956 |
| 10-165K | 71-610 | LG 956 |
| 10-166 | 71-096 | LG 956 |
| 10-168K | 71-250 | LG 956 |
| 10-168SK | 71-280 | LG 956 |
| 10-169 | 71-283 | LG 957 |
| 10-320 | 71-106 | LG 957 |
| 10-440 | 71-107 | LG 957 |
| 10-442 | 71-108 | LG 957 |
| 10-446K | 71-111 | LG 957 |
| 11-539 | 70-701 | LG 964 |
| 13-010C | 70-358 | LG 958 |
| 13-038C | 70-301 | LG 959 |
| 13-061C | 70-356 | LG 958 |
| 13-218C | 70-333 | LG 963 |
| 13-223C | 70-311 | LG 960 |
| 13-3020C | 45-306 | LG 804 |

X

* OREGON® Gator™ replacement blade

# 2019 OEM X-Reference

| OEM No. | OREGON | Page |
|---|---|---|
| **TILDEN** | | |
| 13-302C | 70-316 | LG 959 |
| 13-317C | 70-334 | LG 959 |
| 13-337C | 70-340 | LG 959 |
| 13-346C | 70-349 | LG 959 |
| 13-352 | 70-352 | LG 959 |
| 13-363C | 70-351 | LG 959 |
| 13-402C | 70-317 | LG 959 |
| 13-423C | 70-315 | LG 960 |
| 13-424C | 70-338 | LG 959 |
| 13-478C | 70-321 | LG 960 |
| 13-540C | 70-339 | LG 959 |
| 13-548C | 70-357 | LG 958 |
| 13-550C | 70-353 | LG 958 |
| 13-552C | 70-355 | LG 959 |
| 13-557 | 70-359 | LG 958 |
| 13-714C | 70-330 | LG 959 |
| 13-813C | 70-331 | LG 959 |
| 13-814C | 70-332 | LG 959 |
| 14-923K | 71-100 | LG 956 |
| 15-715 | 68-204 | LG 962 |
| 30-461 | 71-002 | LG 957 |
| 30-462 | 71-001 | LG 957 |
| 40-162 | 72-106 | LG 1029 |
| 40-172 | 72-107 | LG 1029 |
| 40-182 | 72-108 | LG 1031 |
| 40-205 | 72-110 | LG 1030 |
| 40-561W | 72-406 | LG 1029 |
| 40-571W | 72-407 | LG 1029 |
| 40-581W | 72-408 | LG 1029 |
| 40-608 | 72-414 | LG 1030 |
| 40-610W | 72-410 | LG 1030 |
| 50-648W | 72-800 | LG 1047 |
| 50-660 | 72-804 | LG 1047 |
| 53-164 | 45-015 | LG 233 |
| 53-217 | 45-014 | LG 225 |
| 53-239 | 45-112 | LG 241 |
| 53-240 | 45-012 | LG 224 |
| 53-242 | 45-058 | LG 232 |
| 53-242DGS | 45-258 | LG 224 |
| 53-242H | 45-047 | LG 241 |
| 53-244 | 45-034 | LG 224 |
| 53-244DHGS | 45-000 | LG 237 |
| 53-244H | 45-010 | LG 238 |
| 53-246L | 45-031 | LG 232 |
| 53-254 | 45-079 | LG 249 |
| 53-673 | 48-048 | LG 725 |
| 53-674 | 48-049 | LG 725 |
| 53-678 | 48-051 | LG 725 |
| 54-260 | 78-680 | LG 840 |
| BOB-10 | 72-796 | LG 1043 |
| BOB-7 | 45-302 | LG 804 |
| BOB-7TLC | 45-305 | LG 804 |
| DIX-1 | 72-765 | LG 1043 |
| SCA-1 | 45-303 | LG 804 |
| SCA-2 | 72-795 | LG 1044 |
| SNA-1 | 72-728 | LG 1044 |
| SNA-7 | 45-300 | LG 804 |
| **TILLOTSON** | | |
| 179-60 | 55-332 | LG 633 |
| 34-188 | 49-021 | LG 629 |
| 34-210 | 49-023 | LG 629 |
| 34-216 | 49-021 | LG 629 |
| 34-219 | 49-023 | LG 629 |
| 95-177 | 55-342 | LG 627 |
| 95-182 | 07-201 | LG 779 |
| 95-197 | 55-340 | LG 627 |
| DG1HK | 49-800 | LG 610 |
| DG1HS | 49-802 | LG 610 |
| DG1HU | 49-804 | LG 610 |
| DG2HL | 49-801 | LG 610 |
| DG2HU | 49-804 | LG 610 |
| DG3HU | 49-804 | LG 610 |
| DG5HL | 49-801 | LG 610 |
| DG5HS | 49-802 | LG 610 |
| OW497 | 07-207 | LG 779 |
| OW802 | 07-206 | LG 776 |
| RK13HU | 49-805 | LG 609 |
| RK14HU | 49-805 | LG 609 |
| RK17HS | 49-803 | LG 610 |
| RK23HS | 49-803 | LG 610 |
| **TIMBERLAND MACHINES** | | |
| 754-0145 | 75-145 | LG 300 |
| 754-0240 | 75-009 | LG 301 |
| 754-0241 | 75-012 | LG 301 |
| 754-0266 | 75-016 | LG 301 |
| 954-0145 | 75-145 | LG 300 |
| 954-0145A | 75-145 | LG 300 |
| 954-015A | 75-145 | LG 300 |
| 954-0240 | 75-009 | LG 301 |
| 954-0241 | 75-012 | LG 301 |
| 954-0241A | 75-012 | LG 301 |
| 954-0266 | 75-016 | LG 301 |
| 954-0266A | 75-016 | LG 301 |
| **TK** | | |
| 49-829 | 49-846 | LG 608 |
| **TOP FLIGHT** | | |
| 754-0145 | 75-145 | LG 300 |
| 754-0151 | 75-004 | LG 301 |
| 754-0178 | 75-179 | LG 310 |
| 954-0145 | 75-145 | LG 300 |
| 954-0145A | 75-145 | LG 300 |
| 954-0151 | 75-004 | LG 301 |
| 954-015A | 75-145 | LG 300 |
| 954-0178 | 75-179 | LG 310 |
| **TORO** | | |
| 01-102-0130 | 45-205 | LG 228 |
| 01-103-0060 | 45-206 | LG 231 |
| 01-103-0130 | 45-206 | LG 231 |
| 01-289-0030 | 30-430 | LG 211 |
| 100078 | 71-104 | LG 956 |
| 100-1048 | 45-257 | LG 245 |
| 100200 | 94-615* | LG 370 |
| 10-0230 | 75-043 | LG 312 |
| 100-3297-03 | 73-837 | LG 802 |
| 100-3298-03 | 73-836 | LG 802 |
| 100-3976 | 82-674 | LG 904 |
| 100-5038 | 49-300 | LG 626 |
| 100-5754 | 94-052 | LG 573 |
| 100-5754 | 96-741* | LG 573 |
| 100-5754-03 | 94-052 | LG 573 |
| 100-5754-03 | 96-741* | LG 573 |
| 100-6490-03 | 94-615* | LG 370 |
| 100776 | 91-802 | LG 560 |
| 100776 | 96-632* | LG 559 |
| 100777 | 91-802 | LG 560 |
| 100777 | 96-632* | LG 559 |
| 101143 | 34-032 | LG 834 |
| 101144 | 34-039 | LG 834 |
| 101335 | 91-802 | LG 560 |
| 101335 | 96-632* | LG 559 |
| 101762 | 34-032 | LG 834 |
| 101762 | 34-039 | LG 834 |
| 101763 | 34-032 | LG 834 |
| 101776 | 91-802 | LG 560 |
| 102119 | 60-184 | LG 720 |
| 102742 | 15-788 | LG 320 |
| 103-2507 | 396-716* | LG 451 |
| 103-2507 | 596-310* | LG 447 |
| 103-2507 | 91-368 | LG 460 |
| 103-2507 | 96-310* | LG 444 |
| 103-2508 | 96-344* | LG 536 |
| 103-2517 | 396-716* | LG 451 |
| 103-2517 | 596-310* | LG 447 |
| 103-2517 | 91-368 | LG 460 |
| 103-2517 | 96-310* | LG 444 |
| 103-2518 | 91-335 | LG 420 |
| 103-2518 | 96-344* | LG 536 |
| 103-2527 | 396-716* | LG 451 |
| 103-2527 | 596-310* | LG 447 |
| 103-2527 | 91-313 | LG 494 |
| 103-2527 | 96-310* | LG 444 |
| 103-2528 | 91-312 | LG 478 |
| 103-2528 | 96-344* | LG 536 |
| 103-2683 | 46-332 | LG 720 |
| 103282 | 45-205 | LG 228 |
| 10-3345 | 75-625 | LG 313 |
| 103-5681 | 91-368 | LG 460 |
| 103990 | 33-389 | LG 945 |
| 104047 | 07-392 | LG 767 |
| 104047P | 07-392 | LG 767 |
| 104-1300 | 94-615* | LG 370 |
| 104-1301 | 94-618* | LG 506 |
| 104-1303 | 94-621* | LG 570 |
| 104144 | 34-032 | LG 834 |
| 104-2753 | 73-023 | LG 847 |
| 104-2874 | 45-000 | LG 237 |
| 104-5183 | 96-741* | LG 573 |
| 104-6325 | 45-018 | LG 247 |
| 104-6325 | 45-025 | LG 247 |
| 1046397 | 15-789 | LG 320 |
| 1046398 | 15-790 | LG 320 |
| 104-7550 | 49-300 | LG 626 |
| 1048152 | 15-791 | LG 320 |
| 104-8497 | 94-322 | LG 520 |
| 104-8697 | 94-322 | LG 520 |
| 104-8697 | 96-607* | LG 571 |
| 104-8697-03 | 94-322 | LG 520 |
| 104-8697-03 | 96-607* | LG 571 |
| 104-8697-03P | 94-322 | LG 520 |
| 104-8697-03P | 96-607* | LG 571 |
| 104974 | 34-032 | LG 834 |
| 104975 | 34-039 | LG 834 |
| 105-1671 | 33-189 | LG 740 |
| 105-1688 | 82-675 | LG 904 |
| 105-1844 | 60-529 | LG 720 |
| 105-1845 | 60-530 | LG 720 |
| 105-3036 | 72-166 | LG 1037 |
| 105-4089 | 96-741* | LG 573 |
| 105-4089-03 | 96-741* | LG 573 |
| 105450 | 71-104 | LG 956 |
| 105-7350 | 75-888 | LG 322 |
| 105-7711 | 396-764* | LG 537 |
| 105-7711 | 596-341* | LG 482 |
| 105-7711 | 96-341* | LG 446 |
| 105771103 | 94-134 | LG 572 |
| 105-7711-03 | 396-764* | LG 537 |
| 105-7711-03 | 596-341* | LG 482 |
| 105-7711-03 | 96-341* | LG 446 |
| 105-7712 | 396-764* | LG 537 |
| 105-7712 | 596-341* | LG 482 |
| 105-7712 | 96-341* | LG 446 |
| 105771203 | 94-136 | LG 572 |
| 105-7712-03 | 396-764* | LG 537 |
| 105-7712-03 | 596-341* | LG 482 |
| 105-7712-03 | 96-341* | LG 446 |
| 105-7715 | 396-740* | LG 415 |
| 105-7715 | 596-319* | LG 415 |
| 105-7715 | 96-319* | LG 415 |
| 105771503 | 94-126 | LG 569 |
| 105-7715-03 | 396-740* | LG 415 |
| 105-7715-03 | 596-319* | LG 415 |
| 105-7715-03 | 96-319* | LG 415 |
| 105-7716 | 396-740* | LG 415 |
| 105-7716 | 596-319* | LG 415 |
| 105-7716 | 96-319* | LG 415 |
| 105771603 | 94-133 | LG 568 |
| 105-7716-03 | 396-740* | LG 415 |
| 105-7716-03 | 596-319* | LG 415 |
| 105-7716-03 | 96-319* | LG 415 |
| 105-7718 | 396-740* | LG 415 |
| 105-7718 | 596-319* | LG 415 |
| 105-7718 | 94-055 | LG 480 |
| 105-7718 | 96-319* | LG 415 |
| 105-7718-03 | 396-740* | LG 415 |
| 105-7718-03 | 596-319* | LG 415 |
| 105-7718-03 | 94-055 | LG 480 |
| 105-7718-03 | 96-319* | LG 415 |
| 105-7719 | 396-764* | LG 537 |
| 105-7719 | 596-341* | LG 482 |
| 105-7719 | 96-341* | LG 446 |
| 105-7719-03 | 396-764* | LG 537 |
| 105-7719-03 | 596-341* | LG 482 |
| 105-7719-03 | 96-341* | LG 446 |
| 105-7777 | 396-740* | LG 415 |
| 105-7777 | 596-319* | LG 415 |
| 105-7777 | 96-319* | LG 415 |
| 105777703 | 94-130 | LG 569 |
| 105-7777-03 | 396-740* | LG 415 |
| 105-7777-03 | 596-319* | LG 415 |
| 105-7777-03 | 96-319* | LG 415 |
| 105-7778 | 396-764* | LG 537 |
| 105-7778 | 596-341* | LG 482 |
| 105-7778 | 96-341* | LG 446 |
| 105777803 | 94-131 | LG 572 |
| 105-7778-03 | 396-764* | LG 537 |
| 105-7778-03 | 596-341* | LG 482 |
| 105-7778-03 | 96-341* | LG 446 |
| 105-7779 | 96-344* | LG 536 |
| 105777903 | 94-132 | LG 566 |
| 105-7779-03 | 96-344* | LG 536 |
| 105-7781 | 94-053 | LG 503 |
| 105-7781 | 96-344* | LG 536 |
| 105-7781-03 | 94-053 | LG 503 |
| 105-7781-03 | 96-344* | LG 536 |
| 105-7784 | 396-764* | LG 537 |
| 105-7784 | 596-341* | LG 482 |
| 105-7784 | 92-035 | LG 537 |
| 105-7784 | 96-341* | LG 446 |
| 105-7784-03 | 396-764* | LG 537 |
| 105-7784-03 | 596-341* | LG 482 |
| 105-7784-03 | 92-035 | LG 537 |
| 105-7784-03 | 96-341* | LG 446 |
| 105-7794 | 91-256 | LG 437 |
| 105-7794 | 96-344* | LG 536 |
| 105-7794-03 | 91-256 | LG 437 |
| 105-7794-03 | 96-344* | LG 536 |
| 105-7795 | 96-344* | LG 536 |
| 105-7795-03 | 96-344* | LG 536 |
| 105-7796 | 96-344* | LG 536 |
| 105-7796-03 | 96-344* | LG 536 |
| 105874 | 34-009 | LG 821 |
| 105-8777 | 396-740* | LG 415 |
| 105-8777 | 596-319* | LG 415 |
| 105-8777 | 96-319* | LG 415 |
| 105-8777-03 | 396-740* | LG 415 |
| 105-8777-03 | 596-319* | LG 415 |
| 105-8777-03 | 96-319* | LG 415 |
| 105-8783 | 75-887 | LG 323 |
| 105-9810 | 94-052 | LG 573 |
| 105-9810 | 96-741* | LG 573 |
| 105-9810-03 | 94-052 | LG 573 |
| 105-9810-03 | 96-741* | LG 573 |
| 105-9810-05 | 94-052 | LG 573 |
| 105-9810-05 | 96-741* | LG 573 |
| 106-0626 | 94-022 | LG 565 |
| 106-0626 | 94-618* | LG 506 |
| 106-0627 | 94-026 | LG 369 |
| 106-0627 | 94-615* | LG 370 |
| 106-0628 | 94-018 | LG 565 |
| 106-0628 | 94-618* | LG 506 |
| 106-0629 | 94-019 | LG 570 |
| 106-0629 | 94-621* | LG 570 |
| 106-0630 | 94-061 | LG 561 |
| 106-0630 | 94-615* | LG 370 |

X



* OREGON® Gator™ replacement blade

## TORO

| OEM No. | OREGON | Page |
|---|---|---|
| 106-0631 | 94-621* | LG 570 |
| 106077 | 90-643* | LG 560 |
| 106077 | 91-805 | LG 560 |
| 106077-03 | 90-643* | LG 560 |
| 106077-03 | 91-805 | LG 560 |
| 106078 | 90-644* | LG 561 |
| 106078 | 91-806 | LG 447 |
| 106-0888 | 60-428 | LG 720 |
| 106108 | 91-804 | LG 560 |
| 106125 | 15-792 | LG 320 |
| 106144 | 34-019 | LG 821 |
| 106-2174 | 15-002 | LG 311 |
| 106-2247 | 596-362* | LG 441 |
| 106-2247 | 94-068 | LG 441 |
| 106-2247 | 96-362* | LG 570 |
| 106-2247-03 | 596-362* | LG 441 |
| 106-2247-03 | 94-068 | LG 441 |
| 106-2247-03 | 96-362* | LG 570 |
| 106396 | 71-104 | LG 956 |
| 106-4588-01 | 73-028 | LG 850 |
| 106635 | 91-804 | LG 560 |
| 106636 | 90-643* | LG 560 |
| 106636 | 91-805 | LG 560 |
| 106637 | 90-644* | LG 561 |
| 106637 | 91-806 | LG 447 |
| 106-7166-03 | 94-043 | LG 568 |
| 106-7166-03 | 96-701* | LG 568 |
| 106-7369 | 15-016 | LG 323 |
| 106-8300 | 60-531 | LG 720 |
| 106-8777 | 396-740* | LG 415 |
| 106-8777 | 596-319* | LG 415 |
| 106-8777 | 96-319* | LG 415 |
| 106947 | 45-295 | LG 232 |
| 107-0210-03 | 96-701* | LG 568 |
| 107-0215 | 96-701* | LG 568 |
| 107-0215-03 | 96-701* | LG 568 |
| 107-0217-03 | 94-620* | LG 414 |
| 107-0235-03 | 96-741* | LG 573 |
| 107-0241-03 | 96-708* | LG 571 |
| 107-1741-03 | 94-064 | LG 565 |
| 107-1741-03 | 96-395* | LG 565 |
| 107-1742 | 96-395* | LG 565 |
| 107-1742-03 | 96-395* | LG 565 |
| 107-3192 | 396-735* | LG 452 |
| 107-3192 | 596-308* | LG 548 |
| 107-3192 | 92-036 | LG 428 |
| 107-3192 | 96-308* | LG 456 |
| 107-3192-03 | 396-735* | LG 452 |
| 107-3192-03 | 596-308* | LG 548 |
| 107-3192-03 | 92-036 | LG 428 |
| 107-3192-03 | 96-308* | LG 456 |
| 107-3193 | 396-735* | LG 452 |
| 107-3193 | 596-308* | LG 548 |
| 107-3193 | 96-308* | LG 456 |
| 107-3193-03 | 396-735* | LG 452 |
| 107-3193-03 | 596-308* | LG 548 |
| 107-3193-03 | 96-308* | LG 456 |
| 107-3194 | 396-735* | LG 452 |
| 107-3194 | 596-308* | LG 548 |
| 107-3194 | 96-308* | LG 456 |
| 107-3194-03 | 396-735* | LG 452 |
| 107-3194-03 | 596-308* | LG 548 |
| 107-3194-03 | 96-308* | LG 456 |
| 107-3195 | 396-735* | LG 452 |
| 107-3195 | 596-308* | LG 548 |
| 107-3195 | 96-308* | LG 456 |
| 107-3195-03 | 396-735* | LG 452 |
| 107-3195-03 | 596-308* | LG 548 |
| 107-3195-03 | 96-308* | LG 456 |
| 1073196 | 94-125 | LG 563 |
| 107-3196 | 396-735* | LG 452 |
| 107-3196 | 596-308* | LG 548 |
| 107-3196 | 96-308* | LG 456 |
| 107-3196-03 | 396-735* | LG 452 |
| 107-3196-03 | 596-308* | LG 548 |
| 107-3196-03 | 96-308* | LG 456 |
| 107-4276-03 | 94-017 | LG 441 |
| 107-4276-03P | 94-017 | LG 441 |
| 107963 | 71-511 | LG 956 |
| 108-0954 | 96-660* | LG 441 |
| 108-0954-03 | 96-660* | LG 441 |
| 108-1114 | 396-740* | LG 415 |
| 108-1114 | 596-319* | LG 415 |
| 108-1114 | 94-055 | LG 480 |
| 108-1114 | 96-319* | LG 415 |
| 108-1115 | 396-740* | LG 415 |
| 108-1115 | 596-319* | LG 415 |
| 108-1115 | 96-319* | LG 415 |
| 108-1116 | 94-615* | LG 370 |
| 108-1117 | 91-312 | LG 478 |
| 108-1118 | 96-344* | LG 536 |
| 108-112 | 94-055 | LG 480 |
| 108-1120 | 396-764* | LG 537 |
| 108-1120 | 596-341* | LG 482 |
| 108-1120 | 92-035 | LG 537 |
| 108-1120 | 96-341* | LG 446 |
| 108-1123 | 396-740* | LG 415 |
| 108-1123 | 596-319* | LG 415 |
| 108-1123 | 96-319* | LG 415 |
| 108-1124 | 94-019 | LG 570 |
| 108-1125 | 94-039 | LG 561 |
| 108-1125 | 94-615* | LG 370 |
| 108-1126 | 396-764* | LG 537 |
| 108-1126 | 596-341* | LG 482 |
| 108-1126 | 96-341* | LG 446 |
| 108-1127 | 94-618* | LG 506 |
| 108-1128 | 396-740* | LG 415 |
| 108-1128 | 596-319* | LG 415 |
| 108-1128 | 94-133 | LG 568 |
| 108-1128 | 96-319* | LG 415 |
| 108-1451 | 96-701* | LG 568 |
| 108-1452 | 96-701* | LG 568 |
| 108-1453 | 94-620* | LG 414 |
| 108-1477 | 94-618* | LG 506 |
| 108-1958 | 94-073 | LG 573 |
| 108-1958-03 | 94-073 | LG 573 |
| 108-2693 | 15-137 | LG 323 |
| 108-2694 | 15-138 | LG 323 |
| 108-2715 | 15-139 | LG 323 |
| 108-2716 | 15-140 | LG 323 |
| 108335 | 83-300 | LG 819 |
| 108-3762-03 | 94-051 | LG 570 |
| 108-3762-03 | 96-660* | LG 441 |
| 108-3762-03P | 94-051 | LG 570 |
| 108-3762-03P | 96-660* | LG 441 |
| 108-3808 | 30-025 | LG 208 |
| 108-3831 | 07-112 | LG 774 |
| 108-3833 | 30-026 | LG 208 |
| 108-4071 | 75-887 | LG 323 |
| 108-4081 | 96-374* | LG 560 |
| 108-4081-03 | 96-374* | LG 560 |
| 108-4089-03 | 96-374* | LG 560 |
| 108-4110-03 | 96-374* | LG 560 |
| 108-4111-03 | 96-374* | LG 560 |
| 108-4112-03 | 96-374* | LG 560 |
| 108-4115-03 | 396-723* | LG 413 |
| 108-4115-03 | 594-085* | LG 564 |
| 108-4115-03 | 596-323* | LG 453 |
| 108-4115-03 | 96-323* | LG 477 |
| 108-4117-03 | 396-723* | LG 413 |
| 108-4117-03 | 594-085* | LG 564 |
| 108-4117-03 | 596-323* | LG 453 |
| 108-4117-03 | 96-323* | LG 477 |
| 108483 | 45-000 | LG 237 |
| 108501 | 75-208 | LG 277 |
| 108522 | 72-316 | LG 1042 |
| 108-7395-03 | 394-075* | LG 571 |
| 108-7395-03 | 94-075 | LG 481 |
| 108-7395-03 | 96-075* | LG 571 |
| 108798 | 72-309 | LG 1042 |
| 108-9026-03 | 94-049 | LG 573 |
| 108-9026-03 | 96-741* | LG 573 |
| 108-9764 | 96-607* | LG 571 |
| 108-9764-02P | 94-322 | LG 520 |
| 108-9764-03 | 96-607* | LG 571 |
| 108-9764-03P | 96-607* | LG 571 |
| 109101 | 33-033 | LG 742 |
| 109-6872 | 396-321* | LG 562 |
| 109-6872 | 596-321* | LG 562 |
| 109-6872 | 92-029 | LG 435 |
| 109-6872 | 96-321* | LG 436 |
| 109-6873 | 396-322* | LG 438 |
| 109-6873 | 596-322* | LG 438 |
| 109-6873 | 92-030 | LG 567 |
| 109-6873 | 96-322* | LG 567 |
| 109-8070 | 15-116 | LG 283 |
| 109828 | 78-032 | LG 822 |
| 109842 | 45-295 | LG 232 |
| 109-9126 | 72-735 | LG 1045 |
| 109966 | 45-257 | LG 245 |
| 10-9966 | 45-257 | LG 245 |
| 110-0404 | 396-764* | LG 537 |
| 110-0404 | 596-341* | LG 482 |
| 110-0404 | 94-134 | LG 572 |
| 110-0404 | 96-341* | LG 446 |
| 110-0405 | 396-740* | LG 415 |
| 110-0405 | 596-319* | LG 415 |
| 110-0405 | 96-319* | LG 415 |
| 110-0406 | 94-135 | LG 565 |
| 110-0406 | 96-344* | LG 536 |
| 110-0408 | 96-344* | LG 536 |
| 110-0409 | 96-344* | LG 536 |
| 110-0410 | 396-764* | LG 537 |
| 110-0410 | 596-341* | LG 482 |
| 110-0410 | 94-136 | LG 572 |
| 110-0410 | 96-341* | LG 446 |
| 110-0411 | 396-764* | LG 537 |
| 110-0411 | 596-341* | LG 482 |
| 110-0411 | 96-341* | LG 446 |
| 110-0414 | 92-036 | LG 428 |
| 110-0415 | 396-735* | LG 452 |
| 110-0415 | 596-308* | LG 548 |
| 110-0415 | 96-308* | LG 456 |
| 110-0416 | 396-735* | LG 452 |
| 110-0416 | 596-308* | LG 548 |
| 110-0416 | 96-308* | LG 456 |
| 110-0417 | 396-735* | LG 452 |
| 110-0417 | 596-308* | LG 548 |
| 110-0417 | 96-308* | LG 456 |
| 110-0621 | 94-071* | LG 571 |
| 110-0621 | 94-074 | LG 571 |
| 110-0621-03 | 94-071* | LG 571 |
| 110-0621-03 | 94-074 | LG 571 |
| 110-0622-03 | 92-035 | LG 537 |
| 110-0622-03 | 94-071* | LG 571 |
| 110-0624 | 94-071* | LG 571 |
| 110-0624-03 | 94-071* | LG 571 |
| 110116 | 33-334 | LG 730 |
| 1101162 | 33-334 | LG 730 |
| 110162 | 33-334 | LG 730 |
| 110167 | 33-334 | LG 730 |
| 110167 | 33-335 | LG 730 |
| 110167 | 33-336 | LG 730 |
| 110-1857-03 | 596-362* | LG 441 |
| 110-1857-03 | 94-069 | LG 441 |
| 110-1857-03 | 96-362* | LG 570 |
| 110370 | 34-031 | LG 821 |
| 110-4701 | 94-138 | LG 568 |
| 110-4701 | 96-801* | LG 479 |
| 110-4701-03 | 96-801* | LG 479 |
| 110-4702 | 94-072 | LG 568 |
| 110-4702-03 | 94-072 | LG 568 |
| 110-4702-03 | 96-801* | LG 479 |
| 110-4703 | 96-801* | LG 479 |
| 110-4703-03 | 96-801* | LG 479 |
| 110-5049 | 15-141 | LG 323 |
| 110506 | 72-316 | LG 1042 |
| 110513 | 45-000 | LG 237 |
| 110-5946 | 94-079 | LG 568 |
| 110-5946 | 96-802* | LG 568 |
| 110-5946-03 | 94-079 | LG 568 |
| 110-5946-03 | 96-802* | LG 568 |
| 110-5948 | 96-802* | LG 568 |
| 110-5948-03 | 96-802* | LG 568 |
| 110-6115-03 | 96-708* | LG 571 |
| 110-6116-03 | 96-701* | LG 568 |
| 110-6568 | 596-362* | LG 441 |
| 110-6568 | 94-069 | LG 441 |
| 110-6568 | 96-362* | LG 570 |
| 110-6568-03 | 596-362* | LG 441 |
| 110-6568-03 | 94-069 | LG 441 |
| 110-6568-03 | 96-362* | LG 570 |
| 1106774 | 15-794 | LG 320 |
| 110-6775 | 78-033 | LG 834 |
| 110-6837-03 | 94-059 | LG 564 |
| 110-6837-03 | 96-382* | LG 564 |
| 110-6871 | 115-145 | LG 323 |
| 110-6892 | 15-795 | LG 320 |
| 110771 | 35-021 | LG 810 |
| 110774 | 35-021 | LG 810 |
| 110-8837 | 45-266 | LG 247 |
| 110-9915-03 | 396-723* | LG 413 |
| 110-9915-03 | 594-085* | LG 564 |
| 110-9915-03 | 596-323* | LG 453 |
| 110-9915-03 | 94-085 | LG 564 |
| 110-9915-03 | 96-323* | LG 477 |
| 110-9961-03 | 396-723* | LG 413 |
| 110-9961-03 | 594-085* | LG 564 |
| 110-9961-03 | 596-323* | LG 453 |
| 110-9961-03 | 96-323* | LG 477 |
| 111216 | 33-389 | LG 945 |
| 111474 | 07-315 | LG 772 |
| 11-1560 | 34-008 | LG 821 |
| 111674 | 33-330 | LG 729 |
| 111674 | 33-331 | LG 730 |
| 111674 | 33-337 | LG 730 |
| 112-0302 | 98-061 | LG 404 |
| 112-0302 | 98-637* | LG 512 |
| 112-0304 | 198-063 | LG 513 |
| 112-0304 | 598-640* | LG 405 |
| 112-0304 | 98-640* | LG 574 |
| 1120309 | 33-335 | LG 730 |
| 112-0309 | 33-335 | LG 730 |
| 112-0316 | 198-086 | LG 565 |
| 112-0316 | 591-938* | LG 407 |
| 112-0316 | 91-938* | LG 514 |
| 112-0317 | 75-021 | LG 274 |
| 112-0423 | 45-257 | LG 245 |
| 112-3691 | 198-063 | LG 513 |
| 112-3691 | 598-640* | LG 405 |
| 112-3691 | 98-640* | LG 574 |
| 112-3692 | 98-061 | LG 404 |
| 112-3692 | 98-637* | LG 512 |
| 112425 | 78-034 | LG 822 |
| 112426 | 34-012 | LG 821 |
| 112895 | 34-024 | LG 822 |
| 112947 | 396-740* | LG 415 |
| 112947 | 596-319* | LG 415 |
| 112947 | 91-503 | LG 424 |
| 112947 | 96-319* | LG 415 |
| 112-9759 | 94-063 | LG 564 |
| 112-9759-03 | 94-063 | LG 564 |
| 112-9759-03 | 96-382* | LG 564 |
| 11-3240 | 34-002 | LG 821 |
| 113426 | 33-128-1 | LG 741 |
| 113514 | 45-018 | LG 247 |
| 113514 | 45-025 | LG 247 |
| 113579 | 396-723* | LG 413 |
| 113579 | 596-323* | LG 453 |

X

# 2019 OEM X-Reference

| OEM No. | OREGON | Page |
|---|---|---|
| **TORO** | | |
| 113579 | 91-502 | LG 477 |
| 113579 | 96-323* | LG 477 |
| 113579-09 | 396-723* | LG 413 |
| 113579-09 | 596-323* | LG 453 |
| 113579-09 | 91-502 | LG 477 |
| 113579-09 | 96-323* | LG 477 |
| 113997 | 33-113 | LG 740 |
| 114-0434-03 | 394-075* | LG 571 |
| 114-0434-03 | 94-076 | LG 571 |
| 114-0434-03 | 96-075* | LG 571 |
| 114-0435-03 | 394-075* | LG 571 |
| 114-0435-03 | 96-075* | LG 571 |
| 114-0454 | 15-049 | LG 323 |
| 114-1625 | 394-129* | LG 441 |
| 114202 | 15-797 | LG 320 |
| 114-4956 | 396-723* | LG 413 |
| 114-4956 | 594-085* | LG 564 |
| 114-4956 | 596-323* | LG 453 |
| 114-4956 | 96-323* | LG 477 |
| 114-4957 | 396-723* | LG 413 |
| 114-4957 | 594-085* | LG 564 |
| 114-4957 | 596-323* | LG 453 |
| 114-4957 | 96-323* | LG 477 |
| 114-4959 | 396-723* | LG 413 |
| 114-4959 | 594-085* | LG 564 |
| 114-4959 | 596-323* | LG 453 |
| 114-4959 | 94-085 | LG 564 |
| 114-4959 | 96-323* | LG 477 |
| 114-4960 | 396-723* | LG 413 |
| 114-4960 | 594-085* | LG 564 |
| 114-4960 | 596-323* | LG 453 |
| 114-4960 | 96-323* | LG 477 |
| 114-4961 | 96-374* | LG 560 |
| 114-4962 | 96-374* | LG 560 |
| 114-4963 | 96-374* | LG 560 |
| 114-4964 | 96-374* | LG 560 |
| 114-4965 | 96-374* | LG 560 |
| 114594 | 33-031 | LG 742 |
| 114775 | 07-312 | LG 773 |
| 115-2454-03 | 396-803* | LG 438 |
| 115-2454-03 | 94-060* | LG 438 |
| 115-2454-03 | 96-803* | LG 567 |
| 115-4999 | 396-803* | LG 438 |
| 115-4999 | 94-060* | LG 438 |
| 115-4999 | 94-070 | LG 438 |
| 115-4999 | 96-803* | LG 567 |
| 115-4999-03 | 396-803* | LG 438 |
| 115-4999-03 | 94-060* | LG 438 |
| 115-4999-03 | 94-070 | LG 438 |
| 115-4999-03 | 96-803* | LG 567 |
| 115-5059 | 594-078* | LG 564 |
| 115-5059 | 94-063 | LG 564 |
| 115-5059 | 94-128 | LG 564 |
| 115-5059-03 | 594-078* | LG 564 |
| 115-5059-03 | 94-063 | LG 564 |
| 115-5059-03 | 94-128 | LG 564 |
| 115-5062-03 | 594-078* | LG 564 |
| 115-7426 | 15-050 | LG 323 |
| 115-9613 | 115-146 | LG 256 |
| 115-9650-03 | 396-803* | LG 438 |
| 115-9650-03 | 94-060* | LG 438 |
| 115-9650-03 | 96-803* | LG 567 |
| 116-0720 | 45-018 | LG 247 |
| 116-0720 | 45-025 | LG 247 |
| 116277 | 33-118-1 | LG 733 |
| 116-6358-03 | 594-601* | LG 434 |
| 116-6358-S | 594-601* | LG 434 |
| 117-0209-03 | 394-075* | LG 571 |
| 117-0209-03 | 94-077 | LG 571 |
| 117-0209-03 | 96-075* | LG 571 |
| 117-5299 | 34-210 | LG 834 |
| 117-5372-03 | 596-362* | LG 441 |
| 117-5372-03 | 94-069 | LG 441 |
| 117-5372-03 | 96-362* | LG 570 |
| 117-7717 | 73-835 | LG 849 |
| 11-9419 | 94-127 | LG 569 |
| 119-8819 | 15-142 | LG 323 |
| 119-8820 | 15-143 | LG 323 |
| 120-2379 | 96-395* | LG 565 |
| 120-2379-03 | 96-395* | LG 565 |
| 12-0580 | 07-307 | LG 770 |
| 12-0590 | 07-307 | LG 770 |
| 1210 | 45-000 | LG 237 |
| 121-1379 | 72-167 | LG 1037 |
| 121-1380 | 72-168 | LG 1037 |
| 121-4894 | 89-001 | LG 590 |
| 12-5820 | 34-031 | LG 821 |
| 125-9329-01 | 396-740* | LG 415 |
| 125-9329-01 | 596-319* | LG 415 |
| 125-9329-01 | 96-319* | LG 415 |
| 12-6700 | 34-003 | LG 821 |
| 12-8140 | 33-393 | LG 943 |
| 1-289-0030 | 30-846 | LG 211 |
| 130-2861 | 92-168 | LG 572 |
| 130-2862 | 92-167 | LG 443 |
| 131-3939-03 | 394-129* | LG 441 |
| 131-3939-03P | 394-129* | LG 441 |
| 131-4546-03 | 96-607* | LG 571 |
| 131-4547-03 | 96-607* | LG 571 |
| 1-323515 | 396-716* | LG 451 |
| 1-323515 | 596-310* | LG 447 |
| 1-323515 | 91-313 | LG 494 |
| 1-323515 | 96-310* | LG 444 |
| 1-323744 | 15-144 | LG 323 |
| 1-403149 | 396-716* | LG 451 |
| 1-403149 | 596-310* | LG 447 |
| 1-403149 | 91-368 | LG 460 |
| 1-403149 | 96-310* | LG 444 |
| 14-1659 | 94-127 | LG 569 |
| 14-1659 | 96-600* | LG 569 |
| 14-4879 | 91-804 | LG 560 |
| 14-4889 | 94-032 | LG 568 |
| 14-4889 | 94-602* | LG 568 |
| 14672 | 33-384 | LG 947 |
| 14-7799 | 94-032 | LG 568 |
| 14-7799 | 94-602* | LG 568 |
| 14-9419 | 94-127 | LG 569 |
| 1-513645 | 07-392 | LG 767 |
| 1594 | 15-798 | LG 320 |
| 1-603299 | 72-311-1 | LG 1039 |
| 1-613098 | 78-006 | LG 828 |
| 1-633482 | 91-312 | LG 478 |
| 1-633482 | 96-344* | LG 536 |
| 1-633485 | 91-181 | LG 495 |
| 1-633485 | 96-344* | LG 536 |
| 1-633582 | 72-735 | LG 1045 |
| 1-633818 | 72-736 | LG 1045 |
| 1654930 | 07-392 | LG 767 |
| 16-5649 | 72-168 | LG 1037 |
| 17-0850 | 75-043 | LG 312 |
| 18-1520 | 07-112 | LG 774 |
| 18-520 | 07-112 | LG 774 |
| 20-2720 | 94-017 | LG 441 |
| 20-2860 | 07-307 | LG 770 |
| 21-0890 | 15-799 | LG 320 |
| 2119-127 | 45-091 | LG 249 |
| 22-17 | 07-013 | LG 773 |
| 22-4790 | 07-307 | LG 770 |
| 23-0070 | 94-017 | LG 441 |
| 23-0650 | 33-023 | LG 949 |
| 23-0660 | 33-386 | LG 942 |
| 23-2410 | 94-011 | LG 572 |
| 23-2410-03 | 94-011 | LG 572 |
| 23-3170 | 73-014 | LG 849 |
| 23-3670 | 73-026 | LG 851 |
| 23-3730 | 73-003 | LG 847 |
| 23-4380 | 07-013 | LG 773 |
| 23-7350 | 75-060 | LG 322 |
| 23-9080 | 75-043 | LG 312 |
| 24-1000-03 | 94-017 | LG 441 |
| 244-63 | 34-012 | LG 821 |
| 25-11257 | 45-227 | LG 234 |
| 251-207 | 45-242 | LG 243 |
| 251-210 | 45-000 | LG 237 |
| 251-210S | 45-000 | LG 237 |
| 251-257 | 45-018 | LG 247 |
| 251-257 | 45-025 | LG 247 |
| 251-271 | 45-000 | LG 237 |
| 251-297 | 45-259 | LG 224 |
| 251-299 | 45-031 | LG 232 |
| 251-318 | 45-259 | LG 224 |
| 251-339 | 45-018 | LG 247 |
| 251-342 | 45-018 | LG 247 |
| 251-342 | 45-025 | LG 247 |
| 251-351 | 45-295 | LG 232 |
| 251-8 | 45-259 | LG 224 |
| 251-82 | 45-018 | LG 247 |
| 251-82 | 45-025 | LG 247 |
| 254-78 | 45-205 | LG 228 |
| 254-79 | 45-206 | LG 231 |
| 254-94 | 45-002 | LG 237 |
| 25-5880 | 34-027 | LG 821 |
| 25-6420 | 33-023 | LG 949 |
| 25-6430 | 75-060 | LG 322 |
| 26-0880 | 94-017 | LG 441 |
| 26-1840 | 78-044-1 | LG 834 |
| 26-7630 | 07-013 | LG 773 |
| 26-9670 | 75-043 | LG 312 |
| 26-9670-09 | 75-043 | LG 312 |
| 26-9672 | 15-051 | LG 250 |
| 27-0230 | 75-043 | LG 312 |
| 27-0990 | 94-018 | LG 565 |
| 27-0990 | 94-618* | LG 506 |
| 27-0990-03 | 94-018 | LG 565 |
| 27-0990-03 | 94-618* | LG 506 |
| 27-0990-09 | 94-018 | LG 565 |
| 27-0990-09 | 94-618* | LG 506 |
| 27-1160 | 75-165 | LG 322 |
| 271160-09 | 75-165 | LG 322 |
| 27-1160-09 | 75-165 | LG 322 |
| 27-7110 | 30-026 | LG 208 |
| 27-7350 | 75-060 | LG 322 |
| 27-7860 | 07-307 | LG 770 |
| 27-7870 | 07-307 | LG 770 |
| 27-7871 | 07-307 | LG 770 |
| 27-7872 | 07-307 | LG 770 |
| 28-4210 | 33-334 | LG 730 |
| 28-4210 | 33-335 | LG 730 |
| 28-4210 | 33-336 | LG 730 |
| 28-6270 | 33-023 | LG 949 |
| 28-9680 | 07-307 | LG 770 |
| 29-4820 | 72-029 | LG 1042 |
| 29-5530 | 94-011 | LG 572 |
| 29-5530 | 96-602* | LG 572 |
| 29-5530-03 | 94-011 | LG 572 |
| 29-5530-03 | 96-602* | LG 572 |
| 29-5560 | 33-023 | LG 949 |
| 30-0860 | 07-112 | LG 774 |
| 30227 | 91-502 | LG 477 |
| 304-71 | 07-400 | LG 767 |
| 31-0530 | 45-295 | LG 232 |
| 31-9130 | 07-400 | LG 767 |
| 3290-259 | 04-721 | |
| 3290-320 | 04-723 | |
| 3290-337 | 04-721 | |
| 32-9250 | 07-112 | LG 774 |
| 33-1300 | 30-025 | LG 208 |
| 33-4750 | 94-021 | LG 573 |
| 33-4750-03 | 94-021 | LG 573 |
| 3370 | 45-205 | LG 228 |
| 3-3866 | 73-038 | LG 851 |
| 3-4243 | 34-030 | LG 821 |
| 3-4244 | 34-005 | LG 821 |
| 34-6820 | 49-816 | LG 612 |
| 34-7260 | 07-206 | LG 776 |
| 36-3220 | 34-020 | LG 821 |
| 36-3220 | 78-044-1 | LG 834 |
| 37-2610 | 33-384 | LG 947 |
| 3-7274 | 75-075 | LG 322 |
| 3-7512 | 73-026 | LG 851 |
| 37-7300 | 07-013 | LG 773 |
| 37-9080 | 75-980 | LG 863 |
| 38-1420 | 45-000 | LG 237 |
| 38-3000 | 07-013 | LG 773 |
| 3-8615 | 94-017 | LG 441 |
| 38-7820 | 45-257 | LG 245 |
| 39-1540 | 73-026 | LG 851 |
| 3-9283 | 73-026 | LG 851 |
| 39-9160 | 51-013 | LG 725 |
| 403148 | 91-368 | LG 460 |
| 40-5940 | 33-023 | LG 949 |
| 40-8160 | 73-038 | LG 851 |
| 40-8160-01 | 73-038 | LG 851 |
| 41-1010 | 49-021 | LG 629 |
| 41-8040 | 49-812 | LG 612 |
| 42-0680 | 07-013 | LG 773 |
| 42-0883 | 75-938 | LG 250 |
| 42-0884 | 75-938 | LG 250 |
| 42-1000 | 94-017 | LG 441 |
| 42-1000-03 | 94-017 | LG 441 |
| 42-5240 | 07-101 | LG 775 |
| 43-1040 | 34-017 | LG 821 |
| 43-9660 | 07-206 | LG 776 |
| 43-9730 | 55-227 | LG 191 |
| 44-5480 | 94-018 | LG 565 |
| 44-5480 | 94-039 | LG 561 |
| 44-5480 | 94-615* | LG 370 |
| 44-5480 | 94-618* | LG 506 |
| 44-5480-03 | 94-018 | LG 565 |
| 44-6250 | 94-019 | LG 570 |
| 44-6250 | 94-621* | LG 570 |
| 44-6250-03 | 94-019 | LG 570 |
| 44-6250-03 | 94-621* | LG 570 |
| 44-6260 | 75-373 | LG 322 |
| 448990 | 15-800 | LG 320 |
| 45-3030 | 49-810 | LG 612 |
| 45-3031 | 49-812 | LG 612 |
| 45-3120 | 55-333 | LG 633 |
| 45-3200 | 49-816 | LG 612 |
| 46-3960 | 55-227 | LG 191 |
| 46-4740 | 49-816 | LG 612 |
| 46-4750 | 49-816 | LG 612 |
| 46-5650 | 34-210 | LG 834 |
| 46-6560 | 07-392 | LG 767 |
| 468530 | 45-002 | LG 237 |
| 46-8530 | 45-002 | LG 237 |
| 47-1410 | 15-801 | LG 321 |
| 471910 | 33-334 | LG 730 |
| 47-1910 | 33-334 | LG 730 |
| 47-1910 | 33-335 | LG 730 |
| 47-1910 | 33-336 | LG 730 |
| 47-6320 | 30-931 | LG 191 |
| 49-1540 | 73-026 | LG 851 |
| 4999 | 45-000 | LG 237 |
| 5-0751 | 94-017 | LG 441 |
| 51-3530 | 75-274 | LG 322 |
| 51-4160 | 78-680 | LG 840 |
| 51-4160-03 | 78-680 | LG 840 |
| 51-4260 | 48-148 | LG 695 |
| 51-4290 | 75-205 | LG 322 |
| 51-4290-09 | 75-205 | LG 322 |
| 514291 | 15-802 | LG 321 |
| 518213 | 45-000 | LG 237 |
| 52-0240 | 94-061 | LG 561 |
| 52-0240 | 96-724* | LG 430 |
| 52-0250 | 96-724* | LG 430 |
| 52-0260 | 96-724* | LG 430 |
| 5-2045 | 07-307 | LG 770 |
| 52-2450 | 45-025 | LG 247 |

X



* OREGON® Gator™ replacement blade

## TORO

| OEM No. | OREGON | Page |
|---|---|---|
| 52-7060 | 73-026 | LG 851 |
| 5-3348 | 73-026 | LG 851 |
| 5-3460 | 07-307 | LG 770 |
| 5-3462 | 07-307 | LG 770 |
| 53-7740 | 70-422 | LG 964 |
| 539660 | 15-803 | LG 321 |
| 54-0010 | 94-026 | LG 369 |
| 54-0010 | 94-615* | LG 370 |
| 54-0010-03 | 94-026 | LG 369 |
| 54-0010-03 | 94-615* | LG 370 |
| 54-0010-09 | 94-026 | LG 369 |
| 54-0010-09 | 94-615* | LG 370 |
| 54-2750 | 75-275 | LG 322 |
| 54-2750-09 | 75-275 | LG 322 |
| 5-4505 | 75-075 | LG 322 |
| 54-9921 | 73-023 | LG 847 |
| 55-3550 | 07-312 | LG 773 |
| 55-3570 | 07-312 | LG 773 |
| 55-3571 | 07-312 | LG 773 |
| 554940 | 94-026 | LG 369 |
| 55-4940 | 94-039 | LG 561 |
| 55-4940 | 94-615* | LG 370 |
| 55-4940-03 | 94-039 | LG 561 |
| 55-4940-03 | 94-615* | LG 370 |
| 55-4940-09 | 94-039 | LG 561 |
| 55-4940-09 | 94-615* | LG 370 |
| 55-7520 | 33-500-0 | LG 744 |
| 55-7660 | 15-804 | LG 321 |
| 55-8260 | 34-020 | LG 821 |
| 55-8260 | 78-044-1 | LG 834 |
| 55-8760 | 73-018 | LG 849 |
| 55-9250 | 73-046 | LG 847 |
| 55-9251 | 73-046 | LG 847 |
| 55-9300 | 75-066 | LG 251 |
| 56-2390 | 94-022 | LG 565 |
| 56-2390 | 94-618* | LG 506 |
| 56-2390-03 | 94-022 | LG 565 |
| 56-2390-03 | 94-618* | LG 506 |
| 56-2390-09 | 94-022 | LG 565 |
| 56-2390-09 | 94-618* | LG 506 |
| 56-6110 | 07-312 | LG 773 |
| 56-6360 | 07-101 | LG 775 |
| 570240 | 15-805 | LG 321 |
| 57-0250 | 94-063 | LG 564 |
| 57-4700 | 94-038 | LG 568 |
| 57-4700 | 94-602* | LG 568 |
| 57-4700-03 | 94-038 | LG 568 |
| 57-4700-03 | 94-602* | LG 568 |
| 57-4700-09 | 94-038 | LG 568 |
| 57-4700-09 | 94-602* | LG 568 |
| 5942 | 34-027 | LG 821 |
| 59534 | 96-607* | LG 571 |
| 59534P | 96-607* | LG 571 |
| 5-9870 | 34-008 | LG 821 |
| 612543 | 92-011 | LG 490 |
| 612543-01 | 92-011 | LG 490 |
| 612543-03 | 92-011 | LG 490 |
| 61-3400 | 75-075 | LG 322 |
| 61-8050 | 45-025 | LG 247 |
| 61-9760 | 72-306 | LG 1038 |
| 62-4520 | 78-044-1 | LG 834 |
| 62-4520-03 | 78-044-1 | LG 834 |
| 62-4530 | 34-034 | LG 821 |
| 62-7700 | 94-127 | LG 569 |
| 62-7700 | 96-600* | LG 569 |
| 62-7700-03 | 94-127 | LG 569 |
| 62-7700-03 | 96-600* | LG 569 |
| 62-7700-03P | 94-127 | LG 569 |
| 62-7700-03P | 96-600* | LG 569 |
| 633484 | 91-335 | LG 420 |
| 633582 | 72-735 | LG 1045 |
| 63397 | 72-736 | LG 1045 |
| 633971 | 72-736 | LG 1045 |
| 63-5630 | 33-386 | LG 942 |
| 63-9380 | 30-959 | LG 219 |
| 644251 | 72-736 | LG 1045 |
| 67-1390 | 15-807 | LG 321 |
| 6719 | 78-034 | LG 822 |
| 6769 | 34-020 | LG 821 |
| 6769 | 78-044-1 | LG 834 |
| 67-8110 | 83-012 | LG 819 |
| 67-8110-09 | 83-012 | LG 819 |
| 68-2730 | 72-311-1 | LG 1039 |
| 683637 | 33-500-0 | LG 744 |
| 683682 | 92-011 | LG 490 |
| 684380 | 92-011 | LG 490 |
| 684708 | 33-500-0 | LG 744 |
| 696220 | 15-809 | LG 321 |
| 69-6920 | 94-029 | LG 414 |
| 69-6920 | 94-620* | LG 414 |
| 69-6920-03 | 94-029 | LG 414 |
| 7-0056 | 34-002 | LG 821 |
| 7-0136 | 34-005 | LG 821 |
| 7-0431 | 34-037 | LG 821 |
| 7-0823 | 34-034 | LG 821 |
| 71-5380 | 75-192 | LG 251 |
| 71-5381 | 75-192 | LG 251 |
| 71-5390 | 73-019 | LG 849 |
| 71-5960 | 07-103 | LG 775 |
| 73-5850 | 45-257 | LG 245 |
| 740207 | 33-334 | LG 730 |
| 740207 | 33-335 | LG 730 |
| 740207 | 33-336 | LG 730 |
| 741330 | 15-810 | LG 321 |
| 74-1791 | 46-334 | LG 719 |
| 7434 | 34-012 | LG 821 |
| 7451 | 34-038 | LG 821 |
| 75-8780 | 73-036 | LG 849 |
| 75-9010 | 75-225 | LG 322 |
| 75-9090 | 73-037 | LG 847 |
| 75-9420 | 94-127 | LG 569 |
| 75-9420 | 96-600* | LG 569 |
| 77-7440 | 49-132 | LG 749 |
| 77-8200 | 49-300 | LG 626 |
| 77-8210 | 49-300 | LG 626 |
| 77-8510 | 31-904 | LG 930 |
| 77-8510 | 31-907 | LG 929 |
| 77-8520 | 31-907 | LG 929 |
| 77-8560 | 43-014 | LG 932 |
| 77-8930 | 49-304 | LG 603 |
| 77-9270 | 43-014 | LG 932 |
| 79-1720 | 94-032 | LG 568 |
| 79-1720 | 94-602* | LG 568 |
| 79220 | 394-129* | LG 441 |
| 79220P | 394-129* | LG 441 |
| 79-2920 | 91-804 | LG 560 |
| 79-2920-03 | 91-804 | LG 560 |
| 79-3060 | 94-032 | LG 568 |
| 79-3060 | 94-602* | LG 568 |
| 79-3061 | 94-032 | LG 568 |
| 79-3061 | 94-602* | LG 568 |
| 79-3061-03 | 94-032 | LG 568 |
| 79-3061-03 | 94-602* | LG 568 |
| 79-8930 | 49-300 | LG 626 |
| 80-0660 | 73-037 | LG 847 |
| 80-660 | 73-037 | LG 847 |
| 81-0100 | 30-954 | LG 220 |
| 81-4120 | 30-421 | LG 220 |
| 8205 | 34-030 | LG 821 |
| 822390 | 15-812 | LG 321 |
| 82-4110 | 15-813 | LG 321 |
| 826420 | 15-814 | LG 321 |
| 83-1320 | 07-111 | LG 776 |
| 8411 | 15-815 | LG 321 |
| 84-1980 | 73-037 | LG 847 |
| 8462 | 71-104 | LG 956 |
| 84-9120 | 46-335 | LG 719 |
| 8510 | 34-036 | LG 821 |
| 85-6040 | 94-040 | LG 573 |
| 85-6040 | 96-705* | LG 573 |
| 85-6040-03 | 94-040 | LG 573 |
| 85-6040-03 | 96-705* | LG 573 |
| 86-0010 | 94-043 | LG 568 |
| 86-0010 | 96-701* | LG 568 |
| 86-0010-03 | 94-043 | LG 568 |
| 86-0010-03 | 96-701* | LG 568 |
| 88-0771 | 73-046 | LG 847 |
| 88-0781 | 73-023 | LG 847 |
| 88-4400 | 45-000 | LG 237 |
| 88-4430 | 94-021 | LG 573 |
| 88-4430-03 | 94-021 | LG 573 |
| 91-2256 | 94-127 | LG 569 |
| 91-2256 | 96-600* | LG 569 |
| 91-2256-03 | 94-127 | LG 569 |
| 91-2256-03 | 96-600* | LG 569 |
| 91-2256-03P | 94-127 | LG 569 |
| 91-2256-03P | 96-600* | LG 569 |
| 91-2256-03-PLT | 94-127 | LG 569 |
| 91-2256-03-PLT | 96-600* | LG 569 |
| 91-2258 | 75-684 | LG 322 |
| 91-3106 | 94-051 | LG 570 |
| 91-3106 | 96-660* | LG 441 |
| 925588 | 15-820 | LG 321 |
| 92-5608 | 94-045 | LG 571 |
| 92-5608 | 96-708* | LG 571 |
| 92-5608-03 | 94-045 | LG 571 |
| 92-5608-03 | 96-708* | LG 571 |
| 92-6328 | 33-384 | LG 947 |
| 92-6787 | 33-002 | LG 946 |
| 92-6788 | 33-002 | LG 946 |
| 92-7103 | 34-032 | LG 834 |
| 92-7104 | 34-039 | LG 834 |
| 92-7952 | 94-061 | LG 561 |
| 92-7952 | 94-615* | LG 370 |
| 92-7952-03 | 94-061 | LG 561 |
| 92-7952-03 | 94-615* | LG 370 |
| 92-7952-09 | 94-061 | LG 561 |
| 92-7952-09 | 94-615* | LG 370 |
| 92-7961 | 94-618* | LG 506 |
| 92-7961-03 | 94-618* | LG 506 |
| 92-7961-09 | 94-618* | LG 506 |
| 92-9328 | 33-384 | LG 947 |
| 93-1622 | 78-044-1 | LG 834 |
| 93-3160 | 33-113 | LG 740 |
| 93-3884 | 15-821 | LG 321 |
| 93-4106 | 94-051 | LG 570 |
| 93-4106-03 | 94-051 | LG 570 |
| 93-4106-03 | 96-660* | LG 441 |
| 93-4106-03P | 94-051 | LG 570 |
| 93-4106-03P | 96-660* | LG 441 |
| 93-4813 | 45-205 | LG 228 |
| 93-9998 | 33-002 | LG 946 |
| 93-9999 | 33-002 | LG 946 |
| 94-1861 | 94-059 | LG 564 |
| 94-1861 | 94-064 | LG 565 |
| 94-1861-03 | 94-060* | LG 438 |
| 94-2501 | 15-788 | LG 320 |
| 94-2690 | 07-111 | LG 776 |
| 94-2697 | 33-002 | LG 946 |
| 94-4632 | 33-189 | LG 740 |
| 94-6136 | 33-119-1 | LG 734 |
| 95-4108 | 33-002 | LG 946 |
| 95-5574 | 30-957 | LG 209 |
| 95-6151 | 75-939 | LG 322 |
| 95-7489 | 33-002 | LG 946 |
| 98-0710 | 15-807 | LG 321 |
| 98-3764 | 15-824 | LG 321 |
| 98-3780 | 15-825 | LG 321 |
| 99-0913 | 49-132 | LG 749 |
| 99-1584 | 60-531 | LG 720 |
| 99-3877 | 82-674 | LG 904 |
| 99-3904 | 15-826 | LG 321 |
| 99-4627 | 15-827 | LG 322 |
| 99-4640 | 82-676 | LG 904 |
| 99-4647 | 15-828 | LG 322 |
| 99-4944 | 82-675 | LG 904 |
| 99-7162 | 45-018 | LG 247 |
| 99-7162 | 45-025 | LG 247 |
| 99-8012 | 33-128-1 | LG 741 |
| 99-9313 | 73-046 | LG 847 |
| E323515 | 396-716* | LG 451 |
| E323515 | 596-310* | LG 447 |
| E323515 | 91-313 | LG 494 |
| E323515 | 96-310* | LG 444 |
| E403149 | 396-716* | LG 451 |
| E403149 | 596-310* | LG 447 |
| E403149 | 91-368 | LG 460 |
| E403149 | 96-310* | LG 444 |
| E513645 | 07-392 | LG 767 |
| E633482 | 91-312 | LG 478 |
| E633482 | 96-344* | LG 536 |
| E633485 | 91-181 | LG 495 |
| E633485 | 96-344* | LG 536 |
| E633582 | 72-735 | LG 1045 |
| E633791 | 72-736 | LG 1045 |
| E633818 | 72-736 | LG 1045 |
| MW8821 | 34-005 | LG 821 |
| NN10143 | 83-283 | LG 818 |
| NN10143 | 83-403 | LG 818 |
| NN10147 | 83-283 | LG 818 |
| NN10147 | 83-403 | LG 818 |
| NN10175 | 30-430 | LG 211 |
| NN10175 | 30-846 | LG 211 |
| NN10213 | 07-103 | LG 775 |
| NN10277 | 33-035 | LG 742 |
| NN10466 | 07-103 | LG 775 |
| NN10506 | 07-103 | LG 775 |
| NN10684 | 69-282 | LG 817 |
| NN10684 | 83-282 | LG 817 |
| NN10684 | 83-402 | LG 817 |
| NN10774 | 30-430 | LG 211 |
| NN10774 | 30-846 | LG 211 |
| NN10819 | 69-282 | LG 817 |
| NN10819 | 83-282 | LG 817 |
| NN10819 | 83-402 | LG 817 |
| NN10896 | 30-430 | LG 211 |
| NN10896 | 30-846 | LG 211 |
| PL7329 | 91-502 | LG 477 |
| T7112 | 89-001 | LG 590 |

## TORO-WHEELHORSE

| OEM No. | OREGON | Page |
|---|---|---|
| 01-102-0130 | 45-205 | LG 228 |
| 01-103-0060 | 45-206 | LG 231 |
| 01-103-0130 | 45-206 | LG 231 |
| 01-289-0030 | 30-430 | LG 211 |
| 100078 | 71-104 | LG 956 |
| 10-0230 | 75-043 | LG 312 |
| 100-3297-03 | 73-837 | LG 802 |
| 100-3298-03 | 73-836 | LG 802 |
| 100-3976 | 82-674 | LG 904 |
| 100-5038 | 49-300 | LG 626 |
| 101143 | 34-032 | LG 834 |
| 101144 | 34-039 | LG 834 |
| 101762 | 34-032 | LG 834 |
| 101762 | 34-039 | LG 834 |
| 101763 | 34-032 | LG 834 |
| 102119 | 60-184 | LG 720 |
| 102742 | 15-788 | LG 320 |
| 103-2683 | 46-332 | LG 720 |
| 103282 | 45-205 | LG 228 |
| 10-3345 | 75-625 | LG 313 |
| 103990 | 33-389 | LG 945 |
| 104047 | 07-392 | LG 767 |
| 104047P | 07-392 | LG 767 |
| 104144 | 34-032 | LG 834 |
| 104-2753 | 73-023 | LG 847 |
| 104-2874 | 45-000 | LG 237 |
| 1046397 | 15-789 | LG 320 |
| 1046398 | 15-790 | LG 320 |

X

* OREGON® Gator™ replacement blade

# 2019 OEM X-Reference

## TORO-WHEELHORSE

| OEM No. | OREGON | Page |
|---|---|---|
| 104-7550 | 49-300 | LG 626 |
| 1048152 | 15-791 | LG 320 |
| 104-8497 | 94-322 | LG 520 |
| 104974 | 34-032 | LG 834 |
| 104975 | 34-039 | LG 834 |
| 105-1671 | 33-189 | LG 740 |
| 105-1688 | 82-675 | LG 904 |
| 105-1844 | 60-529 | LG 720 |
| 105-1845 | 60-530 | LG 720 |
| 105-3036 | 72-166 | LG 1037 |
| 105450 | 71-104 | LG 956 |
| 105-7350 | 75-888 | LG 322 |
| 105874 | 34-009 | LG 821 |
| 105-8783 | 75-887 | LG 323 |
| 106-0888 | 60-428 | LG 720 |
| 106125 | 15-792 | LG 320 |
| 106144 | 34-019 | LG 821 |
| 106396 | 71-104 | LG 956 |
| 106-4588-01 | 73-028 | LG 850 |
| 106-7369 | 15-016 | LG 323 |
| 106-8300 | 60-531 | LG 720 |
| 106947 | 45-295 | LG 232 |
| 107963 | 71-511 | LG 956 |
| 108-2693 | 15-137 | LG 323 |
| 108-2694 | 15-138 | LG 323 |
| 108-2715 | 15-139 | LG 323 |
| 108-2716 | 15-140 | LG 323 |
| 108335 | 83-300 | LG 819 |
| 108-3808 | 30-025 | LG 208 |
| 108-3831 | 07-112 | LG 774 |
| 108-3833 | 30-026 | LG 208 |
| 108483 | 45-000 | LG 237 |
| 108522 | 72-316 | LG 1042 |
| 108798 | 72-309 | LG 1042 |
| 109101 | 33-033 | LG 742 |
| 109828 | 78-032 | LG 822 |
| 109842 | 45-295 | LG 232 |
| 109966 | 45-257 | LG 245 |
| 110162 | 33-334 | LG 730 |
| 110370 | 34-031 | LG 821 |
| 110-5049 | 15-141 | LG 323 |
| 110506 | 72-316 | LG 1042 |
| 110513 | 45-000 | LG 237 |
| 1106774 | 15-794 | LG 320 |
| 110-6775 | 78-033 | LG 834 |
| 110-6871 | 115-145 | LG 323 |
| 110-6892 | 15-795 | LG 320 |
| 110771 | 35-021 | LG 810 |
| 110774 | 35-021 | LG 810 |
| 110-8837 | 45-266 | LG 247 |
| 111216 | 33-389 | LG 945 |
| 111474 | 07-315 | LG 772 |
| 11-1560 | 34-008 | LG 821 |
| 111674 | 33-330 | LG 729 |
| 112-0302 | 98-061 | LG 404 |
| 112-0317 | 75-021 | LG 274 |
| 112425 | 78-034 | LG 822 |
| 112426 | 34-012 | LG 821 |
| 112895 | 34-024 | LG 822 |
| 11-3240 | 34-002 | LG 821 |
| 113426 | 33-128-1 | LG 741 |
| 113514 | 45-018 | LG 247 |
| 113997 | 33-113 | LG 740 |
| 114-0454 | 15-049 | LG 323 |
| 114202 | 15-797 | LG 320 |
| 114594 | 33-031 | LG 742 |
| 114775 | 07-312 | LG 773 |
| 115-7426 | 15-050 | LG 323 |
| 115-9613 | 115-146 | LG 256 |
| 116277 | 33-118-1 | LG 733 |
| 117-5299 | 34-210 | LG 834 |
| 117-7717 | 73-835 | LG 849 |
| 119-8819 | 15-142 | LG 323 |
| 119-8820 | 15-143 | LG 323 |
| 12-0580 | 07-307 | LG 770 |
| 12-0590 | 07-307 | LG 770 |
| 121-1379 | 72-167 | LG 1037 |
| 121-1380 | 72-168 | LG 1037 |
| 121-4894 | 89-001 | LG 590 |
| 12-5820 | 34-031 | LG 821 |
| 12-6700 | 34-003 | LG 821 |
| 12-8140 | 33-393 | LG 943 |
| 1-289-0030 | 30-846 | LG 211 |
| 1-323744 | 15-144 | LG 323 |
| 1-513645 | 07-392 | LG 767 |
| 1594 | 15-798 | LG 320 |
| 1-603299 | 72-311-1 | LG 1039 |
| 1-633582 | 72-735 | LG 1045 |
| 1-633818 | 72-736 | LG 1045 |
| 1654930 | 07-392 | LG 767 |
| 17-0850 | 75-043 | LG 312 |
| 18-1520 | 07-112 | LG 774 |
| 20-2860 | 07-307 | LG 770 |
| 21-0890 | 15-799 | LG 320 |
| 2119-127 | 45-091 | LG 249 |
| 22-17 | 07-013 | LG 773 |
| 22-4790 | 07-307 | LG 770 |
| 23-0650 | 33-023 | LG 949 |
| 23-0660 | 33-386 | LG 942 |
| 23-3170 | 73-014 | LG 849 |
| 23-3670 | 73-026 | LG 851 |
| 23-3730 | 73-003 | LG 847 |
| 23-4380 | 07-013 | LG 773 |
| 23-7350 | 75-060 | LG 322 |
| 23-9080 | 75-043 | LG 312 |
| 244-63 | 34-012 | LG 821 |
| 25-11257 | 45-227 | LG 234 |
| 251-207 | 45-242 | LG 243 |
| 251-210 | 45-000 | LG 237 |
| 251-257 | 45-018 | LG 247 |
| 251-271 | 45-000 | LG 237 |
| 251-297 | 45-259 | LG 224 |
| 251-299 | 45-031 | LG 232 |
| 251-318 | 45-259 | LG 224 |
| 251-339 | 45-018 | LG 247 |
| 251-351 | 45-295 | LG 232 |
| 251-8 | 45-259 | LG 224 |
| 254-78 | 45-205 | LG 228 |
| 254-79 | 45-206 | LG 231 |
| 25-5880 | 34-027 | LG 821 |
| 25-6420 | 33-023 | LG 949 |
| 25-6430 | 75-060 | LG 322 |
| 26-1840 | 78-044-1 | LG 834 |
| 26-7630 | 07-013 | LG 773 |
| 26-9670 | 75-043 | LG 312 |
| 26-9670-09 | 75-043 | LG 312 |
| 26-9672 | 15-051 | LG 250 |
| 27-0230 | 75-043 | LG 312 |
| 27-1160 | 75-165 | LG 322 |
| 27-1160-09 | 75-165 | LG 322 |
| 27-7110 | 30-026 | LG 208 |
| 27-7350 | 75-060 | LG 322 |
| 27-7860 | 07-307 | LG 770 |
| 27-7870 | 07-307 | LG 770 |
| 27-7871 | 07-307 | LG 770 |
| 27-7872 | 07-307 | LG 770 |
| 28-4210 | 33-334 | LG 730 |
| 28-4210 | 33-336 | LG 730 |
| 28-6270 | 33-023 | LG 949 |
| 28-9680 | 07-307 | LG 770 |
| 29-4820 | 72-029 | LG 1042 |
| 29-5560 | 33-023 | LG 949 |
| 30-0860 | 07-112 | LG 774 |
| 304-71 | 07-400 | LG 767 |
| 31-0530 | 45-295 | LG 232 |
| 31-9130 | 07-400 | LG 767 |
| 3290-259 | 04-721 | |
| 3290-320 | 04-723 | |
| 3290-337 | 04-721 | |
| 32-9250 | 07-112 | LG 774 |
| 33-1300 | 30-025 | LG 208 |
| 3370 | 45-205 | LG 228 |
| 3-3866 | 73-038 | LG 851 |
| 3-4243 | 34-030 | LG 821 |
| 3-4244 | 34-005 | LG 821 |
| 34-6820 | 49-816 | LG 612 |
| 34-7260 | 07-206 | LG 776 |
| 36-3220 | 34-020 | LG 821 |
| 36-3220 | 78-044-1 | LG 834 |
| 37-2610 | 33-384 | LG 947 |
| 3-7274 | 75-075 | LG 322 |
| 3-7512 | 73-026 | LG 851 |
| 37-7300 | 07-013 | LG 773 |
| 37-9080 | 75-980 | LG 863 |
| 38-1420 | 45-000 | LG 237 |
| 38-3000 | 07-013 | LG 773 |
| 38-7820 | 45-257 | LG 245 |
| 39-1540 | 73-026 | LG 851 |
| 3-9283 | 73-026 | LG 851 |
| 39-9160 | 51-013 | LG 725 |
| 40-5940 | 33-023 | LG 949 |
| 40-8160 | 73-038 | LG 851 |
| 40-8160-01 | 73-038 | LG 851 |
| 41-1010 | 49-021 | LG 629 |
| 41-8040 | 49-812 | LG 612 |
| 42-0680 | 07-013 | LG 773 |
| 42-0883 | 75-938 | LG 250 |
| 42-0884 | 75-938 | LG 250 |
| 42-5240 | 07-101 | LG 775 |
| 43-1040 | 34-017 | LG 821 |
| 43-9660 | 07-206 | LG 776 |
| 43-9730 | 55-227 | LG 191 |
| 44-6260 | 75-373 | LG 322 |
| 448990 | 15-800 | LG 320 |
| 45-3030 | 49-810 | LG 612 |
| 45-3031 | 49-812 | LG 612 |
| 45-3120 | 55-333 | LG 633 |
| 45-3200 | 49-816 | LG 612 |
| 46-3960 | 55-227 | LG 191 |
| 46-4740 | 49-816 | LG 612 |
| 46-4750 | 49-816 | LG 612 |
| 46-6560 | 07-392 | LG 767 |
| 46-8530 | 45-002 | LG 237 |
| 47-1410 | 15-801 | LG 321 |
| 47-1910 | 33-334 | LG 730 |
| 47-6320 | 30-931 | LG 191 |
| 49-1540 | 73-026 | LG 851 |
| 4999 | 45-000 | LG 237 |
| 51-3530 | 75-274 | LG 322 |
| 51-4160 | 78-680 | LG 840 |
| 51-4160-03 | 78-680 | LG 840 |
| 51-4260 | 48-148 | LG 695 |
| 51-4290 | 75-205 | LG 322 |
| 51-4290-09 | 75-205 | LG 322 |
| 514291 | 15-802 | LG 321 |
| 518213 | 45-000 | LG 237 |
| 5-2045 | 07-307 | LG 770 |
| 52-2450 | 45-025 | LG 247 |
| 52-7060 | 73-026 | LG 851 |
| 5-3348 | 73-026 | LG 851 |
| 5-3460 | 07-307 | LG 770 |
| 5-3462 | 07-307 | LG 770 |
| 53-7740 | 70-422 | LG 964 |
| 539660 | 15-803 | LG 321 |
| 54-2750 | 75-275 | LG 322 |
| 54-2750-09 | 75-275 | LG 322 |
| 5-4505 | 75-075 | LG 322 |
| 54-9921 | 73-023 | LG 847 |
| 55-3550 | 07-312 | LG 773 |
| 55-3570 | 07-312 | LG 773 |
| 55-3571 | 07-312 | LG 773 |
| 55-7520 | 33-500-0 | LG 744 |
| 55-7660 | 15-804 | LG 321 |
| 55-8260 | 34-020 | LG 821 |
| 55-8260 | 78-044-1 | LG 834 |
| 55-8760 | 73-018 | LG 849 |
| 55-9250 | 73-046 | LG 847 |
| 55-9251 | 73-046 | LG 847 |
| 55-9300 | 75-066 | LG 251 |
| 56-6110 | 07-312 | LG 773 |
| 56-6360 | 07-101 | LG 775 |
| 570240 | 15-805 | LG 321 |
| 5942 | 34-027 | LG 821 |
| 5-9870 | 34-008 | LG 821 |
| 61-8050 | 45-025 | LG 247 |
| 61-9760 | 72-306 | LG 1038 |
| 62-4520 | 78-044-1 | LG 834 |
| 62-4530 | 34-034 | LG 821 |
| 633582 | 72-735 | LG 1045 |
| 633971 | 72-736 | LG 1045 |
| 63-5630 | 33-386 | LG 942 |
| 63-9380 | 30-959 | LG 219 |
| 67-1390 | 15-807 | LG 321 |
| 6719 | 78-034 | LG 822 |
| 6769 | 34-020 | LG 821 |
| 67-8110 | 83-012 | LG 819 |
| 67-8110-09 | 83-012 | LG 819 |
| 68-2730 | 72-311-1 | LG 1039 |
| 696220 | 15-809 | LG 321 |
| 7-0056 | 34-002 | LG 821 |
| 7-0136 | 34-005 | LG 821 |
| 7-0431 | 34-037 | LG 821 |
| 7-0823 | 34-034 | LG 821 |
| 71-5380 | 75-192 | LG 251 |
| 71-5381 | 75-192 | LG 251 |
| 71-5390 | 73-019 | LG 849 |
| 71-5960 | 07-103 | LG 775 |
| 740207 | 33-334 | LG 730 |
| 741330 | 15-810 | LG 321 |
| 74-1791 | 46-334 | LG 719 |
| 7434 | 34-012 | LG 821 |
| 7451 | 34-038 | LG 821 |
| 75-8780 | 73-036 | LG 849 |
| 75-9010 | 75-225 | LG 322 |
| 75-9090 | 73-037 | LG 847 |
| 77-7440 | 49-132 | LG 749 |
| 77-8200 | 49-300 | LG 626 |
| 77-8210 | 49-300 | LG 626 |
| 77-8510 | 31-904 | LG 930 |
| 77-8510 | 31-907 | LG 929 |
| 77-8560 | 43-014 | LG 932 |
| 77-8930 | 49-304 | LG 603 |
| 77-9270 | 43-014 | LG 932 |
| 79-8930 | 49-300 | LG 626 |
| 80-0660 | 73-037 | LG 847 |
| 80-660 | 73-037 | LG 847 |
| 81-0100 | 30-954 | LG 220 |
| 81-4120 | 30-421 | LG 220 |
| 8205 | 34-030 | LG 821 |
| 822390 | 15-812 | LG 321 |
| 82-4110 | 15-813 | LG 321 |
| 826420 | 15-814 | LG 321 |
| 83-1320 | 07-111 | LG 776 |
| 8411 | 15-815 | LG 321 |
| 84-1980 | 73-037 | LG 847 |
| 8462 | 71-104 | LG 956 |
| 84-9120 | 46-335 | LG 719 |
| 8510 | 34-036 | LG 821 |
| 88-0771 | 73-046 | LG 847 |
| 88-0781 | 73-023 | LG 847 |
| 88-4400 | 45-000 | LG 237 |
| 91-2258 | 75-684 | LG 322 |
| 925588 | 15-820 | LG 321 |
| 92-5789 | 86-002 | LG 781 |
| 92-6328 | 33-384 | LG 947 |
| 92-6787 | 33-002 | LG 946 |
| 92-6788 | 33-002 | LG 946 |
| 92-7103 | 34-032 | LG 834 |
| 93-3160 | 33-113 | LG 740 |

X



* OREGON® Gator™ replacement blade

| OEM No. | OREGON | Page |
|---|---|---|
| **TORO-WHEELHORSE** | | |
| 93-3884 | 15-821 | LG 321 |
| 93-4106 | 94-051 | LG 570 |
| 93-4813 | 45-205 | LG 228 |
| 93-9998 | 33-002 | LG 946 |
| 93-9999 | 33-002 | LG 946 |
| 94-2501 | 15-788 | LG 320 |
| 94-2690 | 07-111 | LG 776 |
| 94-4632 | 33-189 | LG 740 |
| 94-6136 | 33-119-1 | LG 734 |
| 95-4108 | 33-002 | LG 946 |
| 95-5574 | 30-957 | LG 209 |
| 95-6151 | 75-939 | LG 322 |
| 95-7489 | 33-002 | LG 946 |
| 98-0710 | 15-807 | LG 321 |
| 98-3764 | 15-824 | LG 321 |
| 98-3780 | 15-825 | LG 321 |
| 99-0913 | 49-132 | LG 749 |
| 99-3877 | 82-674 | LG 904 |
| 99-3904 | 15-826 | LG 321 |
| 99-4627 | 15-827 | LG 322 |
| 99-4640 | 82-676 | LG 904 |
| 99-4647 | 15-828 | LG 322 |
| 99-4944 | 82-675 | LG 904 |
| 99-8012 | 33-128-1 | LG 741 |
| 99-9313 | 73-046 | LG 847 |
| E513645 | 07-392 | LG 767 |
| E633582 | 72-735 | LG 1045 |
| E633791 | 72-736 | LG 1045 |
| E633818 | 72-736 | LG 1045 |
| MW8821 | 34-005 | LG 821 |
| NN10143 | 83-283 | LG 818 |
| NN10143 | 83-403 | LG 818 |
| NN10147 | 83-283 | LG 818 |
| NN10147 | 83-403 | LG 818 |
| NN10175 | 30-430 | LG 211 |
| NN10175 | 30-846 | LG 211 |
| NN10213 | 07-103 | LG 775 |
| NN10277 | 33-035 | LG 742 |
| NN10466 | 07-103 | LG 775 |
| NN10506 | 07-103 | LG 775 |
| NN10684 | 69-282 | LG 817 |
| NN10684 | 83-282 | LG 817 |
| NN10684 | 83-402 | LG 817 |
| NN10774 | 30-430 | LG 211 |
| NN10774 | 30-846 | LG 211 |
| NN10819 | 69-282 | LG 817 |
| NN10819 | 83-282 | LG 817 |
| NN10819 | 83-402 | LG 817 |
| NN10896 | 30-430 | LG 211 |
| NN10896 | 30-846 | LG 211 |
| T7112 | 89-001 | LG 590 |
| **TRACTOR SUPPLY** | | |
| 110883 | 75-108 | LG 289 |
| 37X57 | 75-057 | LG 307 |
| 37X61 | 75-061 | LG 307 |
| 754-0145 | 75-145 | LG 300 |
| 754-0151 | 75-004 | LG 301 |
| 754-0935 | 75-092 | LG 304 |
| 954-0145 | 75-145 | LG 300 |
| 954-0145A | 75-145 | LG 300 |
| 954-0151 | 75-004 | LG 301 |
| 954-015A | 75-145 | LG 300 |
| 954-0935 | 75-092 | LG 304 |
| **TRAILMATE** | | |
| 11109 | 45-295 | LG 232 |
| 11972 | 71-108 | LG 957 |
| **TRIMMER** | | |
| 20202 | 45-257 | LG 245 |
| 25202 | 45-257 | LG 245 |

| OEM No. | OREGON | Page |
|---|---|---|
| **TROY-BILT** | | |
| 613223 | 40-143 | LG 587 |
| 753-0080-0637 | 40-004 | LG 588 |
| 753-06561 | 40-004 | LG 588 |
| 791-613223 | 40-143 | LG 587 |
| 791-613223B | 40-143 | LG 587 |
| **TROY-BILT (ALSO SEE MTD)** | | |
| 1128-1 | 75-685 | LG 324 |
| 1185574 | 45-295 | LG 232 |
| 1185651 | 15-829 | LG 324 |
| 1270-1A | 84-102 | LG 954 |
| 1270-2A | 84-103 | LG 954 |
| 1714 | 45-205 | LG 228 |
| 1719859 | 83-300 | LG 819 |
| 1720859 | 76-067-0 | LG 726 |
| 1726450 | 83-300 | LG 819 |
| 1743875 | 15-837 | LG 324 |
| 1744706 | 15-833 | LG 324 |
| 1748723 | 33-015 | LG 948 |
| 1751328 | 33-026 | LG 947 |
| 1751328 | 33-028 | LG 947 |
| 1754250 | 33-397 | LG 942 |
| 1754250P | 33-397 | LG 942 |
| 1755537 | 15-837 | LG 324 |
| 1755539 | 15-838 | LG 324 |
| 1755565 | 15-836 | LG 324 |
| 1764007 | 15-837 | LG 324 |
| 1764009 | 15-838 | LG 324 |
| 1769767 | 75-277 | LG 324 |
| 1770334 | 75-378 | LG 324 |
| 1772388 | 33-112 | LG 735 |
| 1830258 | 15-839 | LG 324 |
| 1874139 | 83-301 | LG 816 |
| 1901118 | 84-101 | LG 954 |
| 1901118A | 84-101 | LG 954 |
| 1902325 | 75-380 | LG 324 |
| 1909404 | 75-278 | LG 324 |
| 490-100-M084 | 198-049 | LG 518 |
| 490-100-M084 | 598-631* | LG 390 |
| 490-100-M084 | 98-631* | LG 390 |
| 490-110-C131 | 96-401* | LG 404 |
| 490-110-C131 | 98-096 | LG 404 |
| 490-110-M108 | 598-629* | LG 575 |
| 490-110-M108 | 98-093 | LG 411 |
| 490-110-M108 | 98-629* | LG 412 |
| 490-110-M115 | 198-059 | LG 403 |
| 490-110-M115 | 598-629* | LG 575 |
| 490-110-M115 | 98-629* | LG 412 |
| 703809 | 45-206 | LG 231 |
| 721-04031 | 49-051 | LG 954 |
| 741-7107 | 45-205 | LG 228 |
| 742-0171 | 98-037 | LG 574 |
| 742-0171B | 98-037 | LG 574 |
| 742-04043 | 598-640* | LG 405 |
| 742-04043 | 98-640* | LG 574 |
| 742-04087 | 198-153 | LG 520 |
| 742-04087 | 598-629* | LG 575 |
| 742-04087 | 98-629* | LG 412 |
| 742-04118-0637 | 84-103 | LG 954 |
| 742-04119-0637 | 84-102 | LG 954 |
| 742-04125-X | 598-640* | LG 405 |
| 742-04125-X | 98-640* | LG 574 |
| 742-04154 | 98-094 | LG 514 |
| 742-04154 | 98-671* | LG 514 |
| 742-04154A | 98-094 | LG 514 |
| 742-04154A | 98-671* | LG 514 |
| 742-04244 | 96-401* | LG 404 |
| 742-04244 | 98-096 | LG 404 |
| 742-04244A | 96-401* | LG 404 |
| 742-04244A | 98-096 | LG 404 |
| 742-04290 | 96-401* | LG 404 |
| 742-04290 | 98-096 | LG 404 |
| 742-04290-X | 96-401* | LG 404 |
| 742-04308 | 598-629* | LG 575 |

| OEM No. | OREGON | Page |
|---|---|---|
| 742-04308 | 98-093 | LG 411 |
| 742-04308 | 98-629* | LG 412 |
| 742-04312 | 598-629* | LG 575 |
| 742-04312 | 98-629* | LG 412 |
| 742-04361 | 96-401* | LG 404 |
| 742-04410 | 598-629* | LG 575 |
| 742-04410 | 98-629* | LG 412 |
| 742-0542 | 98-057 | LG 513 |
| 742-0611 | 198-063 | LG 513 |
| 742-0611 | 598-640* | LG 405 |
| 742-0611 | 98-640* | LG 574 |
| 742-0611A | 198-063 | LG 513 |
| 742-0611A | 598-640* | LG 405 |
| 742-0611A | 98-640* | LG 574 |
| 742-0611-X | 598-640* | LG 405 |
| 742-0611-X | 98-640* | LG 574 |
| 7420616 | 198-059 | LG 403 |
| 7420616 | 598-629* | LG 575 |
| 7420616 | 98-629* | LG 412 |
| 742-0616A | 198-059 | LG 403 |
| 742-0616A | 598-629* | LG 575 |
| 742-0616A | 98-629* | LG 412 |
| 742-0644 | 98-054 | LG 574 |
| 742-0644 | 98-634* | LG 405 |
| 742-0656 | 598-629* | LG 575 |
| 742-0656 | 98-093 | LG 411 |
| 742-0656 | 98-629* | LG 412 |
| 742-0739 | 92-140 | LG 516 |
| 742-0741 | 198-049 | LG 518 |
| 742-0741 | 598-631* | LG 390 |
| 742-0741 | 98-631* | LG 390 |
| 742-0741A | 198-049 | LG 518 |
| 742-0741A | 598-631* | LG 390 |
| 742-0741A | 98-631* | LG 390 |
| 742-4360 | 598-629* | LG 575 |
| 742-4360 | 98-629* | LG 412 |
| 754-04122 | 15-025 | LG 255 |
| 754-04142 | 15-026 | LG 277 |
| 754-04201 | 15-052 | LG 315 |
| 754-04219 | 15-027 | LG 306 |
| 754-04240 | 15-028 | LG 277 |
| 917-1459 | 33-112 | LG 735 |
| 921-04031 | 49-051 | LG 954 |
| 9245 | 75-686 | LG 324 |
| 925-3169A | 33-026 | LG 947 |
| 925-3169A | 33-028 | LG 947 |
| 941-0107 | 45-205 | LG 228 |
| 942-0171B | 98-037 | LG 574 |
| 942-04087 | 198-153 | LG 520 |
| 942-04087 | 598-629* | LG 575 |
| 942-04087 | 98-629* | LG 412 |
| 942-04125-X | 598-640* | LG 405 |
| 942-04125-X | 98-640* | LG 574 |
| 942-04154 | 98-094 | LG 514 |
| 942-04154 | 98-671* | LG 514 |
| 942-04154A | 98-094 | LG 514 |
| 942-04154A | 98-671* | LG 514 |
| 942-04244 | 96-401* | LG 404 |
| 942-04244 | 98-096 | LG 404 |
| 942-04244A | 96-401* | LG 404 |
| 942-04244A | 98-096 | LG 404 |
| 942-04244A-X | 96-401* | LG 404 |
| 942-04244-X | 96-401* | LG 404 |
| 942-04290 | 96-401* | LG 404 |
| 942-04290 | 98-096 | LG 404 |
| 942-04308 | 598-629* | LG 575 |
| 942-04308 | 98-093 | LG 411 |
| 942-04308 | 98-629* | LG 412 |
| 942-04308-X | 598-629* | LG 575 |
| 942-04308-X | 98-629* | LG 412 |
| 942-04312 | 598-629* | LG 575 |
| 942-04312 | 98-629* | LG 412 |
| 942-04312-X | 598-629* | LG 575 |
| 942-04312-X | 98-629* | LG 412 |
| 942-04360-0684 | 598-629* | LG 575 |

| OEM No. | OREGON | Page |
|---|---|---|
| 942-04360-0684 | 98-629* | LG 412 |
| 942-04361 | 96-401* | LG 404 |
| 942-04410 | 598-629* | LG 575 |
| 942-04410 | 98-629* | LG 412 |
| 942-04410-0684 | 598-629* | LG 575 |
| 942-04410-0684 | 98-629* | LG 412 |
| 942-0542 | 98-057 | LG 513 |
| 942-0611 | 198-063 | LG 513 |
| 942-0611 | 598-640* | LG 405 |
| 942-0611 | 98-640* | LG 574 |
| 942-0611A | 198-063 | LG 513 |
| 942-0611A | 598-640* | LG 405 |
| 942-0611A | 98-640* | LG 574 |
| 942-0611-X | 598-640* | LG 405 |
| 942-0611-X | 98-640* | LG 574 |
| 942-0616 | 198-059 | LG 403 |
| 942-0616 | 598-629* | LG 575 |
| 942-0616 | 98-629* | LG 412 |
| 942-0616A | 198-059 | LG 403 |
| 942-0616A | 598-629* | LG 575 |
| 942-0616A | 98-629* | LG 412 |
| 942-0616-X | 598-629* | LG 575 |
| 942-0616-X | 98-629* | LG 412 |
| 942-0641 | 198-049 | LG 518 |
| 942-0641 | 598-631* | LG 390 |
| 942-0641 | 98-631* | LG 390 |
| 942-0644 | 98-054 | LG 574 |
| 942-0644 | 98-634* | LG 405 |
| 942-0656 | 598-629* | LG 575 |
| 942-0656 | 98-093 | LG 411 |
| 942-0656 | 98-629* | LG 412 |
| 942-0739 | 92-140 | LG 516 |
| 942-4360 | 598-629* | LG 575 |
| 942-4360 | 98-629* | LG 412 |
| 954-04093 | 15-053 | LG 305 |
| 954-04122 | 15-025 | LG 255 |
| 954-04142 | 15-026 | LG 277 |
| 954-04176A | 15-054 | LG 324 |
| 954-04201 | 15-052 | LG 315 |
| 954-04201A | 15-052 | LG 315 |
| 954-04219 | 15-027 | LG 306 |
| 954-04240 | 15-028 | LG 277 |
| 9618 | 49-050 | LG 954 |
| 9621 | 49-051 | LG 954 |
| GW-1714 | 45-205 | LG 228 |
| GW-1744706 | 15-833 | LG 324 |
| GW-1755565 | 15-836 | LG 324 |
| GW-1764007 | 15-837 | LG 324 |
| GW-1764009 | 15-838 | LG 324 |
| GW56035 | 75-686 | LG 324 |
| GW-602 | 49-051 | LG 954 |
| GW-644 | 49-051 | LG 954 |
| GW-7420616 | 198-059 | LG 403 |
| GW-7420616 | 598-629* | LG 575 |
| GW-7420616 | 98-629* | LG 412 |
| GW-9245 | 75-686 | LG 324 |
| GW-9601 | 49-051 | LG 954 |
| GW-9609 | 49-051 | LG 954 |
| GW-9621 | 49-051 | LG 954 |
| GW-B1744706 | 15-833 | LG 324 |
| GW-B1755537 | 15-837 | LG 324 |
| GW-B1755565 | 15-836 | LG 324 |
| OEM-742-0171B | 98-037 | LG 574 |
| OEM-742-04308 | 598-629* | LG 575 |
| OEM-742-04308 | 98-093 | LG 411 |
| OEM-742-04308 | 98-629* | LG 412 |
| OEM-742-0616 | 198-059 | LG 403 |
| OEM-742-0616 | 598-629* | LG 575 |
| OEM-742-0616 | 98-629* | LG 412 |
| OEM-742-0741 | 198-049 | LG 518 |
| OEM-742-0741 | 598-631* | LG 390 |
| OEM-742-0741 | 98-631* | LG 390 |
| T1769767 | 75-277 | LG 324 |

X

* OREGON® Gator™ replacement blade

# 2019 OEM X-Reference

| OEM No. | OREGON | Page |
|---|---|---|
| **TRU CUT** | | |
| 20202 | 45-257 | LG 245 |
| 25202 | 45-257 | LG 245 |
| T11275 | 45-257 | LG 245 |
| **UNICO** | | |
| 754-0145 | 75-145 | LG 300 |
| 754-0151 | 75-004 | LG 301 |
| 754-0201 | 75-441 | LG 334 |
| 754-0234 | 75-441 | LG 334 |
| 754-0935 | 75-092 | LG 304 |
| 954-0145 | 75-145 | LG 300 |
| 954-0145A | 75-145 | LG 300 |
| 954-0151 | 75-004 | LG 301 |
| 954-015A | 75-145 | LG 300 |
| 954-0201 | 75-441 | LG 334 |
| 954-0234 | 75-441 | LG 334 |
| 954-0935 | 75-092 | LG 304 |
| **UNITED HARDWARE DIST** | | |
| 754-0145 | 75-145 | LG 300 |
| 754-0201 | 75-441 | LG 334 |
| 754-0230 | 75-008 | LG 301 |
| 754-0234 | 75-441 | LG 334 |
| 754-0240 | 75-009 | LG 301 |
| 754-0241 | 75-012 | LG 301 |
| **UNITED HARDWARE DIST** | | |
| 754-0266 | 75-016 | LG 301 |
| 754-0293 | 75-018 | LG 301 |
| 754-0329 | 75-145 | LG 300 |
| 954-0145 | 75-145 | LG 300 |
| 954-0145A | 75-145 | LG 300 |
| 954-015A | 75-145 | LG 300 |
| 954-0201 | 75-441 | LG 334 |
| 954-0230 | 75-008 | LG 301 |
| 954-0234 | 75-441 | LG 334 |
| 954-0240 | 75-009 | LG 301 |
| 954-0241 | 75-012 | LG 301 |
| 954-0241A | 75-012 | LG 301 |
| 954-0266 | 75-016 | LG 301 |
| 954-0266A | 75-016 | LG 301 |
| 954-0293 | 75-018 | LG 301 |
| **UNITED TECHNOLOGIES** | | |
| 4367240 | 33-721 | LG 920 |
| 4379040 | 33-721 | LG 920 |
| SM10795 | 33-720 | LG 920 |
| SMH12B81 | 33-720 | LG 920 |
| **VAL-TEST DISTRIBUTORS** | | |
| 754-0145 | 75-145 | LG 300 |
| 754-0151 | 75-004 | LG 301 |
| 754-0201 | 75-441 | LG 334 |
| 754-0234 | 75-441 | LG 334 |
| 754-0935 | 75-092 | LG 304 |
| 954-0145 | 75-145 | LG 300 |
| 954-0145A | 75-145 | LG 300 |
| 954-0151 | 75-004 | LG 301 |
| 954-015A | 75-145 | LG 300 |
| 954-0201 | 75-441 | LG 334 |
| 954-0234 | 75-441 | LG 334 |
| 954-0935 | 75-092 | LG 304 |
| **VAN CAMP HARDWARE** | | |
| 754-0151 | 75-004 | LG 301 |
| 754-0194 | 75-090 | LG 301 |
| 954-0151 | 75-004 | LG 301 |
| 954-0194 | 75-090 | LG 301 |
| **VANLEUNEN'S INC.** | | |
| 754-0151 | 75-004 | LG 301 |
| 954-0151 | 75-004 | LG 301 |

| OEM No. | OREGON | Page |
|---|---|---|
| **VELKE** | | |
| 3999 | 45-019 | LG 239 |
| VPIVOTBUSH | 45-127 | LG 244 |
| **VENTZKI** | | |
| 754-0145 | 75-145 | LG 300 |
| 754-0151 | 75-004 | LG 301 |
| 754-0935 | 75-092 | LG 304 |
| 954-0145 | 75-145 | LG 300 |
| 954-0145A | 75-145 | LG 300 |
| 954-0151 | 75-004 | LG 301 |
| 954-015A | 75-145 | LG 300 |
| 954-0935 | 75-092 | LG 304 |
| **VERI** | | |
| V804 | 55-804-1 | LG 994 |
| V807 | 55-807 | LG 994 |
| **VICTA** | | |
| 754-0151 | 75-004 | LG 301 |
| 954-0151 | 75-004 | LG 301 |
| **VIKING** | | |
| 6120-430-0500 | 33-331 | LG 730 |
| 6120-430-0500 | 33-337 | LG 730 |
| **VILLAGE BLACKSMITH** | | |
| 1609 | 75-120 | LG 300 |
| **VORNADO** | | |
| 754-0935 | 75-092 | LG 304 |
| 954-0935 | 75-092 | LG 304 |
| **WALBRO** | | |
| 010-HD | 49-847 | LG 610 |
| 010-HDA | 49-852 | LG 611 |
| 010-WY | 49-839 | LG 613 |
| 125-527 | 07-214 | LG 779 |
| 125-527-1 | 07-214 | LG 779 |
| 125528 | 07-219 | LG 779 |
| 125-528 | 07-219 | LG 779 |
| 125-528-1 | 07-219 | LG 779 |
| 125528D | 07-219 | LG 779 |
| 125-552 | 07-137 | LG 779 |
| 125-552-1 | 07-137 | LG 779 |
| 140-69 | 55-343 | LG 627 |
| 140-69-08 | 55-343 | LG 627 |
| 140-69-8 | 55-343 | LG 627 |
| 140-70 | 55-342 | LG 627 |
| 140-70-08 | 55-342 | LG 627 |
| 140-70-8 | 55-342 | LG 627 |
| 188-11 | 49-026 | LG 769 |
| 188-11-1 | 49-026 | LG 769 |
| 188-12 | 49-020 | LG 631 |
| 188-12 | 49-088-0 | LG 631 |
| 188-12-1 | 49-020 | LG 631 |
| 188-12-8 | 49-020 | LG 631 |
| 188-13 | 49-027 | LG 769 |
| 188-13-1 | 49-027 | LG 769 |
| 188-15 | 49-020 | LG 631 |
| 188-15-1 | 49-020 | LG 631 |
| 188-506 | 55-187 | LG 631 |
| 188-506-1 | 55-187 | LG 631 |
| 188-508 | 55-187 | LG 631 |
| 188-508 | 55-188 | LG 631 |
| 188-508-1 | 55-188 | LG 631 |
| 188-509 | 55-188 | LG 631 |
| 188-509 | 55-189 | LG 631 |
| 188-509-1 | 55-189 | LG 631 |
| 188-512 | 49-020 | LG 631 |
| 188-512 | 49-088-0 | LG 631 |
| 188-512-1 | 49-088-0 | LG 631 |
| 34-219 | 49-023 | LG 629 |
| 350-501 | 49-810 | LG 612 |
| 350-502 | 49-812 | LG 612 |

| OEM No. | OREGON | Page |
|---|---|---|
| 350-503 | 49-807 | LG 611 |
| 350-504 | 49-809 | LG 613 |
| 350-511 | 49-814 | LG 614 |
| 350-518 | 49-806 | LG 611 |
| 350-534 | 49-812 | LG 612 |
| 615-047 | 50-607 | LG 595 |
| 615-058 | 49-833 | LG 611 |
| 615-211 | 49-021 | LG 629 |
| 615-229 | 49-023 | LG 629 |
| 615-237 | 49-810 | LG 612 |
| 615-237 | 49-834 | LG 611 |
| 615-245 | 49-816 | LG 612 |
| 615-405 | 49-807 | LG 611 |
| 615-435 | 49-809 | LG 613 |
| 615-443 | 49-812 | LG 612 |
| 615-463 | 49-831 | LG 612 |
| 615-500 | 55-342 | LG 627 |
| 615-530 | 49-833 | LG 611 |
| 615-534 | 49-810 | LG 612 |
| 615-534 | 49-834 | LG 611 |
| 615-538 | 49-816 | LG 612 |
| 615-546 | 49-873 | LG 612 |
| 615-554 | 49-877 | LG 613 |
| 615-570 | 49-832 | LG 611 |
| 615-582 | 49-853 | LG 611 |
| 615-598 | 49-807 | LG 611 |
| 615-610 | 49-882-0 | LG 613 |
| 615-686 | 49-020 | LG 631 |
| 615-712 | 49-020 | LG 631 |
| 615-720 | 49-281 | LG 613 |
| 615-736 | 49-026 | LG 769 |
| 615-740 | 49-020 | LG 631 |
| 615-744 | 49-027 | LG 769 |
| 615-748 | 55-187 | LG 631 |
| 615-752 | 55-188 | LG 631 |
| 615-756 | 55-189 | LG 631 |
| 615-772 | 49-020 | LG 631 |
| 615-784 | 49-027 | LG 769 |
| 615-811 | 49-020 | LG 631 |
| 615-852 | 49-847 | LG 610 |
| 615-853 | 49-843 | LG 612 |
| 615-854 | 49-839 | LG 613 |
| 615-856 | 49-852 | LG 611 |
| 615-857 | 49-806 | LG 611 |
| 615-860 | 49-844 | LG 612 |
| 615-864 | 49-849 | LG 610 |
| 615-870 | 49-882-0 | LG 613 |
| 615-873 | 49-316 | LG 613 |
| 615-961 | 49-847 | LG 610 |
| 630746 | 55-333 | LG 633 |
| 82-26 | 49-021 | LG 629 |
| 82-75 | 49-021 | LG 629 |
| 82-75-7 | 49-021 | LG 629 |
| 82-76 | 49-021 | LG 629 |
| 82-76-7 | 49-021 | LG 629 |
| 82-82 | 49-023 | LG 629 |
| 82-82-7 | 49-023 | LG 629 |
| 82-87 | 49-023 | LG 629 |
| 88-171 | 49-847 | LG 610 |
| 88-171-8 | 49-847 | LG 610 |
| 88-181 | 55-333 | LG 633 |
| 88-28 | 49-847 | LG 610 |
| 88-28 | 55-333 | LG 633 |
| 88-54 | 55-333 | LG 633 |
| 88-54-8 | 55-333 | LG 633 |
| 88-55 | 53-006 | LG 632 |
| 88-55-8 | 53-006 | LG 632 |
| 88-89 | 55-334 | LG 633 |
| 92-351 | 49-315 | LG 627 |
| D10HD | 49-847 | LG 610 |
| D10-HD | 49-847 | LG 610 |
| D10-HDA | 49-835 | LG 611 |
| D10HDB | 49-806 | LG 611 |
| D10-HDB | 49-806 | LG 611 |
| D10HDC | 49-807 | LG 611 |

| OEM No. | OREGON | Page |
|---|---|---|
| D10-HDC | 49-807 | LG 611 |
| D10-SDC | 49-810 | LG 612 |
| D10-WAT | 49-812 | LG 612 |
| D10-WJ | 49-843 | LG 612 |
| D10WS | 49-814 | LG 614 |
| D10-WS | 49-814 | LG 614 |
| D10WY | 49-839 | LG 613 |
| D10-WY | 49-839 | LG 613 |
| D10WZ | 49-848 | LG 613 |
| D10-WZ | 49-848 | LG 613 |
| D11-WJ | 49-839 | LG 613 |
| D11-WYL | 49-317 | LG 613 |
| D12-WJ | 49-839 | LG 613 |
| D1HDB | 49-806 | LG 611 |
| D1-HDB | 49-806 | LG 611 |
| D1HDC | 49-807 | LG 611 |
| D1-HDC | 49-807 | LG 611 |
| D1-MDC | 49-809 | LG 613 |
| D1-SDC | 49-810 | LG 612 |
| D1-WA | 49-812 | LG 612 |
| D1-WAT | 49-812 | LG 612 |
| D1-WJ | 49-843 | LG 612 |
| D1WS | 49-814 | LG 614 |
| D1-WS | 49-814 | LG 614 |
| D20-HDA | 49-835 | LG 611 |
| D20-WAT | 49-844 | LG 612 |
| D20-WYJ | 49-281 | LG 613 |
| D22HDA | 49-852 | LG 611 |
| D22-HDA | 49-852 | LG 611 |
| K10HD | 49-849 | LG 610 |
| K10-HD | 49-849 | LG 610 |
| K10HDB | 49-832 | LG 611 |
| K10-HDB | 49-832 | LG 611 |
| K10HDC | 49-833 | LG 611 |
| K10-HDC | 49-833 | LG 611 |
| K10-SDC | 49-834 | LG 611 |
| K10-WAT | 49-816 | LG 612 |
| K10-WB | 49-872 | LG 612 |
| K10-WJ | 49-873 | LG 612 |
| K10-WY | 49-875 | LG 612 |
| K10-WZ | 49-877 | LG 613 |
| K1-LMB | 49-201 | LG 608 |
| K1-SDC | 49-834 | LG 611 |
| K20-HDA | 49-845 | LG 611 |
| K20WAT | 49-831 | LG 612 |
| K20-WAT | 49-831 | LG 612 |
| K20-WYJ | 49-882-0 | LG 613 |
| K20-WYL | 49-316 | LG 613 |
| K22HDA | 49-853 | LG 611 |
| K22-HDA | 49-853 | LG 611 |
| K3-LMB | 49-201 | LG 608 |
| K6WA | 49-816 | LG 612 |
| K6-WA | 49-816 | LG 612 |
| WAL-140-69-8 | 55-343 | LG 627 |
| WAL-140-70-8 | 55-342 | LG 627 |
| WAL-188-11-1 | 49-026 | LG 769 |
| WAL-188-13-1 | 49-027 | LG 769 |
| WAL-188-15-1 | 49-020 | LG 631 |
| WAL-188-506 | 55-187 | LG 631 |
| WAL-188-508 | 55-188 | LG 631 |
| WAL-188-509 | 55-189 | LG 631 |
| WAL-82-75-7 | 49-021 | LG 629 |
| WAL-82-82-7 | 49-023 | LG 629 |
| WAL-D10-HDB | 49-806 | LG 611 |
| WAL-D10-HDC | 49-807 | LG 611 |
| WAL-D10-WJ | 49-843 | LG 612 |
| WAL-D10-WY | 49-839 | LG 613 |
| WAL-D10-WZ | 49-848 | LG 613 |
| WAL-D11-WYL | 49-317 | LG 613 |
| WAL-D20-HDA | 49-835 | LG 611 |
| WAL-D20-WAT | 49-844 | LG 612 |
| WAL-D22-HDA | 49-852 | LG 611 |
| WAL-K10-HDB | 49-832 | LG 611 |
| WAL-K10-HDC | 49-833 | LG 611 |
| WAL-K10-SDC | 49-810 | LG 612 |

X



* OREGON® Gator™ replacement blade

| OEM No. | OREGON | Page |
|---|---|---|
| **WALBRO** | | |
| WAL-K10-SDC | 49-834 | LG 611 |
| WAL-K10-WAT | 49-816 | LG 612 |
| WAL-K10-WB | 49-872 | LG 612 |
| WAL-K10-WJ | 49-873 | LG 612 |
| WAL-K10-WYB | 49-875 | LG 612 |
| WAL-K10-WYC | 49-875 | LG 612 |
| WAL-K10-WZ | 49-877 | LG 613 |
| WAL-K1-MDC | 49-809 | LG 613 |
| WAL-K20-HDA | 49-845 | LG 611 |
| WAL-K20-WAT | 49-831 | LG 612 |
| WAL-K20-WYJ | 49-882-0 | LG 613 |
| WAL-K20-WYL | 49-316 | LG 613 |
| WAL-K22-HDA | 49-853 | LG 611 |
| WYJ-192 | 50-603 | LG 595 |
| WYJ-192-1 | 50-603 | LG 595 |
| WYL-19 | 50-607 | LG 595 |
| WYL-19-1 | 50-607 | LG 595 |
| **WALKER** | | |
| 355-040 | 91-911 | LG 576 |
| 4218 | 72-756 | LG 1046 |
| 5037 | 45-047 | LG 241 |
| 5265 | 45-295 | LG 232 |
| 5705-0 | 91-911 | LG 576 |
| 5705-1 | 91-911 | LG 576 |
| 5705-3 | 91-912 | LG 576 |
| 5705-3 | 91-913 | LG 576 |
| 5705-4 | 91-912 | LG 576 |
| 5705-4 | 91-913 | LG 576 |
| 5706 | 65-230 | LG 342 |
| 5715-4 | 72-756 | LG 1046 |
| 6231 | 15-842 | LG 325 |
| 6942 | 33-317-0 | LG 729 |
| 6950 | 33-384 | LG 947 |
| 7230 | 15-843 | LG 325 |
| 7234 | 15-844 | LG 325 |
| 7235 | 15-845 | LG 325 |
| 7705-1 | 91-917 | LG 576 |
| 7705-1 | 91-920 | LG 576 |
| 7705-2 | 91-919 | LG 576 |
| 7705-2 | 91-920 | LG 576 |
| 7705-6 | 92-177 | LG 576 |
| 7705-7 | 92-176 | LG 576 |
| 8230 | 115-212 | LG 325 |
| B1SB3423 | 91-911 | LG 576 |
| **WARDS** | | |
| 90266209 | 46-319 | LG 712 |
| **WARNER** | | |
| 5215-129 | 33-125-1 | LG 736 |
| 5215-130 | 33-126-1 | LG 736 |
| 5215-134 | 33-122-1 | LG 734 |
| 5215-14 | 33-114 | LG 734 |
| 5215-142 | 33-139 | LG 736 |
| 5215-18 | 33-183 | LG 735 |
| 5215-51 | 33-110 | LG 735 |
| 5215-53 | 33-116 | LG 735 |
| 5215-59 | 33-128-1 | LG 741 |
| 5215-62 | 33-113 | LG 740 |
| 5215-69 | 33-185 | LG 737 |
| 5215-88 | 33-118-1 | LG 733 |
| 5217-18 | 33-112 | LG 735 |
| 5217-2 | 33-111 | LG 735 |
| 5217-32 | 33-133 | LG 736 |
| 5217-43 | 33-133 | LG 736 |
| 5217-9 | 33-112 | LG 735 |
| 5218-10 | 33-119-1 | LG 734 |
| 5218-110 | 33-188 | LG 738 |
| 5218-14 | 33-184 | LG 737 |
| 5218-17 | 33-127 | LG 737 |
| 5218-201 | 33-187 | LG 738 |
| 5218-213 | 33-136 | LG 737 |
| 5218-215 | 33-137 | LG 737 |
| 5218-219 | 33-188 | LG 738 |
| 5218-223 | 33-119-1 | LG 734 |
| 5218-26 | 33-121 | LG 734 |
| 5218-27 | 33-117 | LG 733 |
| 5218-29 | 33-124 | LG 736 |
| 5218-30 | 33-120 | LG 734 |
| 5218-31 | 33-120 | LG 734 |
| 5218-31 | 33-138 | LG 738 |
| 5218-33 | 33-189 | LG 740 |
| 5218-44 | 33-187 | LG 738 |
| 5218-5 | 33-115 | LG 738 |
| 5218-58 | 33-121 | LG 734 |
| 5218-65 | 33-136 | LG 737 |
| 5218-76 | 33-135 | LG 737 |
| 5218-80 | 33-137 | LG 737 |
| 5218-94 | 33-138 | LG 738 |
| 5219-14 | 33-132 | LG 735 |
| 5219-19 | 33-190 | LG 741 |
| 5219-25 | 33-104 | LG 735 |
| 5219-45 | 33-130 | LG 733 |
| 5219-51 | 33-134 | LG 736 |
| 5219-64 | 33-134 | LG 736 |
| 5219-79 | 33-134 | LG 736 |
| 5219-99 | 33-255 | LG 736 |
| I-5218-251-008 | 33-159 | LG 733 |
| **WEED EATER** | | |
| 19157 | 49-331 | LG 604 |
| 23364 | 07-201 | LG 779 |
| 23369 | 55-612 | LG 211 |
| 23791 | 55-613 | LG 211 |
| 24548 | 55-226 | LG 212 |
| 24841 | 07-207 | LG 779 |
| 26048 | 55-822 | LG 1027 |
| 35008 | 49-021 | LG 629 |
| 35027 | 55-343 | LG 627 |
| 35032 | 49-816 | LG 612 |
| 35049 | 49-816 | LG 612 |
| 35092 | 49-816 | LG 612 |
| 35093 | 49-812 | LG 612 |
| 35106 | 49-021 | LG 629 |
| 35112 | 49-806 | LG 611 |
| 35127 | 49-832 | LG 611 |
| 35128 | 49-806 | LG 611 |
| 35144 | 49-816 | LG 612 |
| 35145 | 49-812 | LG 612 |
| 35146 | 49-812 | LG 612 |
| 35161 | 49-816 | LG 612 |
| 35163 | 49-021 | LG 629 |
| 35173 | 49-812 | LG 612 |
| 35185 | 49-816 | LG 612 |
| 35186 | 49-812 | LG 612 |
| 35189 | 55-342 | LG 627 |
| 35199 | 49-816 | LG 612 |
| 35213 | 49-835 | LG 611 |
| 35260 | 49-816 | LG 612 |
| 530024841 | 07-207 | LG 779 |
| 530026048 | 55-822 | LG 1027 |
| 530-026048 | 55-822 | LG 1027 |
| 530-069195 | 55-255 | LG 1019 |
| 530-086473 | 55-281 | LG 1027 |
| 530091481 | 07-206 | LG 776 |
| 530091878 | 07-207 | LG 779 |
| 91481 | 07-206 | LG 776 |
| 952-701663 | 55-285 | LG 1027 |
| 952-701674 | 40-010 | LG 588 |
| 952-711548 | 55-281 | LG 1027 |
| **WESTERN AUTO** | | |
| 37X12 | 75-112 | LG 306 |
| 37X38 | 75-038 | LG 307 |
| 37X57 | 75-057 | LG 307 |
| 37X65 | 75-065 | LG 307 |
| 754-0145 | 75-145 | LG 300 |
| 754-0151 | 75-004 | LG 301 |
| 754-0178 | 75-179 | LG 310 |
| 7540182 | 75-208 | LG 277 |
| 754-0230 | 75-008 | LG 301 |
| 754-0293 | 75-018 | LG 301 |
| 754-0349 | 75-021 | LG 274 |
| 754-0350 | 75-035 | LG 302 |
| 754-0935 | 75-092 | LG 304 |
| 954-0145 | 75-145 | LG 300 |
| 954-0145A | 75-145 | LG 300 |
| 954-0151 | 75-004 | LG 301 |
| 954-015A | 75-145 | LG 300 |
| 954-0178 | 75-179 | LG 310 |
| 954-0230 | 75-008 | LG 301 |
| 954-0293 | 75-018 | LG 301 |
| 954-0350 | 75-035 | LG 302 |
| 954-0935 | 75-092 | LG 304 |
| GW-7540350 | 75-035 | LG 302 |
| **WESTERN INDUSTRIES** | | |
| 54765 | 35-021 | LG 810 |
| 54766 | 35-021 | LG 810 |
| **WESTWOOD** | | |
| 1530 | 33-331 | LG 730 |
| 1530 | 33-334 | LG 730 |
| 1530 | 33-335 | LG 730 |
| 1530 | 33-336 | LG 730 |
| 1530 | 33-337 | LG 730 |
| 2703 | 33-399 | LG 944 |
| **WHEATBELT** | | |
| 754-0145 | 75-145 | LG 300 |
| 754-0201 | 75-441 | LG 334 |
| 754-0230 | 75-008 | LG 301 |
| 754-0234 | 75-441 | LG 334 |
| 754-0240 | 75-009 | LG 301 |
| 754-0241 | 75-012 | LG 301 |
| 754-0266 | 75-016 | LG 301 |
| 754-0293 | 75-018 | LG 301 |
| 754-0935 | 75-092 | LG 304 |
| 954-0145 | 75-145 | LG 300 |
| 954-0145A | 75-145 | LG 300 |
| 954-015A | 75-145 | LG 300 |
| 954-0201 | 75-441 | LG 334 |
| 954-0230 | 75-008 | LG 301 |
| 954-0234 | 75-441 | LG 334 |
| 954-0240 | 75-009 | LG 301 |
| 954-0241 | 75-012 | LG 301 |
| 954-0241A | 75-012 | LG 301 |
| 954-0266 | 75-016 | LG 301 |
| 954-0266A | 75-016 | LG 301 |
| 954-0293 | 75-018 | LG 301 |
| 954-0935 | 75-092 | LG 304 |
| **WHITE** | | |
| 754-0197 | 75-079 | LG 301 |
| 754-0266 | 75-016 | LG 301 |
| 754-0293 | 75-018 | LG 301 |
| 754-0349 | 75-021 | LG 274 |
| 754-0350 | 75-035 | LG 302 |
| 954-0197 | 75-079 | LG 301 |
| 954-0266 | 75-016 | LG 301 |
| 954-0266A | 75-016 | LG 301 |
| 954-0293 | 75-018 | LG 301 |
| 954-0350 | 75-035 | LG 302 |
| GW-7540350 | 75-035 | LG 302 |
| **WHITE OUTDOOR PRODUCTS** | | |
| 754-0145 | 75-145 | LG 300 |
| 754-0151 | 75-004 | LG 301 |
| 754-0178 | 75-179 | LG 310 |
| 754-0194 | 75-090 | LG 301 |
| 754-0201 | 75-441 | LG 334 |
| 754-0230 | 75-008 | LG 301 |
| 754-0234 | 75-441 | LG 334 |
| 754-0240 | 75-009 | LG 301 |
| 754-0241 | 75-012 | LG 301 |
| 754-0935 | 75-092 | LG 304 |
| 954-0145 | 75-145 | LG 300 |
| 954-0145A | 75-145 | LG 300 |
| 954-0151 | 75-004 | LG 301 |
| 954-015A | 75-145 | LG 300 |
| 954-0178 | 75-179 | LG 310 |
| 954-0194 | 75-090 | LG 301 |
| 954-0201 | 75-441 | LG 334 |
| 954-0230 | 75-008 | LG 301 |
| 954-0234 | 75-441 | LG 334 |
| 954-0240 | 75-009 | LG 301 |
| 954-0241 | 75-012 | LG 301 |
| 954-0241A | 75-012 | LG 301 |
| 954-0935 | 75-092 | LG 304 |
| **WHITE STORES** | | |
| 754-0145 | 75-145 | LG 300 |
| 754-0151 | 75-004 | LG 301 |
| 754-0178 | 75-179 | LG 310 |
| 754-0201 | 75-441 | LG 334 |
| 754-0234 | 75-441 | LG 334 |
| 754-0240 | 75-009 | LG 301 |
| 754-0241 | 75-012 | LG 301 |
| 754-0266 | 75-016 | LG 301 |
| 754-0935 | 75-092 | LG 304 |
| 954-0145 | 75-145 | LG 300 |
| 954-0145A | 75-145 | LG 300 |
| 954-0151 | 75-004 | LG 301 |
| 954-015A | 75-145 | LG 300 |
| 954-0178 | 75-179 | LG 310 |
| 954-0201 | 75-441 | LG 334 |
| 954-0234 | 75-441 | LG 334 |
| 954-0240 | 75-009 | LG 301 |
| 954-0241 | 75-012 | LG 301 |
| 954-0241A | 75-012 | LG 301 |
| 954-0266 | 75-016 | LG 301 |
| 954-0266A | 75-016 | LG 301 |
| 954-0935 | 75-092 | LG 304 |
| **WICKES LUMBER** | | |
| 754-0145 | 75-145 | LG 300 |
| 754-0151 | 75-004 | LG 301 |
| 954-0145 | 75-145 | LG 300 |
| 954-0145A | 75-145 | LG 300 |
| 954-0151 | 75-004 | LG 301 |
| 954-015A | 75-145 | LG 300 |
| **WISCONSIN** | | |
| L0194 | 30-080 | LG 205 |
| L0194A | 30-819 | LG 205 |
| LO188 | 30-102 | LG 220 |
| LP43 | 07-001 | LG 765 |
| VE527W | 60-687 | LG 720 |
| WD66AS2 | 35-006 | LG 808 |
| **WISCONSIN ROBIN** | | |
| EY1573620101 | 30-412 | LG 220 |
| EY1573620101 | 30-612 | LG 195 |
| EY2063260107 | 30-414 | LG 221 |
| EY2073260008 | 30-415 | |
| EY2073260618 | 30-419 | LG 221 |
| EY2263261007 | 30-418 | LG 221 |
| EY2273261007 | 30-413 | LG 221 |
| EY2273280307 | 30-410 | LG 220 |
| EY2273280317 | 30-410 | LG 220 |
| EY2343260407 | 30-423 | LG 221 |
| **WOOD MIZER** | | |
| P604 | 33-120 | LG 734 |
| P604 | 33-138 | LG 738 |

X

* OREGON® Gator™ replacement blade

# 2019 OEM X-Reference

| OEM No. | OREGON | Page |
|---|---|---|
| **WOODS** | | |
| 03643100 | 33-112 | LG 735 |
| 08899100CKT | 396-807* | LG 454 |
| 08899100CKT | 596-815* | LG 578 |
| 08899100CKT | 92-159 | LG 578 |
| 09246600CKT | 396-807* | LG 454 |
| 09246600CKT | 596-815* | LG 578 |
| 1001513 | 91-584 | LG 578 |
| 1001513BLK | 91-584 | LG 578 |
| 1001513KT | 91-584 | LG 578 |
| 10081899KT2 | 591-585* | LG 493 |
| 10081899KT2 | 91-585 | LG 493 |
| 1008199 | 591-585* | LG 493 |
| 1008199 | 91-585 | LG 493 |
| 1008199KT | 591-585* | LG 493 |
| 1008199KT | 91-585 | LG 493 |
| 1008199KT2 | 91-585 | LG 493 |
| 10676 | 15-847 | LG 325 |
| 10859 | 15-848 | LG 325 |
| 10864 | 15-849 | LG 325 |
| 11466 | 15-850 | LG 325 |
| 13404 | 91-764 | LG 579 |
| 13404KT | 91-764 | LG 579 |
| 13425 | 115-217 | LG 325 |
| 13453 | 15-851 | LG 325 |
| 1469 | 15-852 | LG 325 |
| 15127 | 91-766 | LG 579 |
| 15127CKT | 91-766 | LG 579 |
| 15127KT | 91-766 | LG 579 |
| 15184 | 15-853 | LG 325 |
| 15415A | 15-854 | LG 325 |
| 15624 | 15-855 | LG 258 |
| 16099 | 15-945 | LG 325 |
| 16106 | 45-295 | LG 232 |
| 18186 | 15-856 | LG 325 |
| 18440 | 15-858 | LG 325 |
| 18879 | 115-214 | LG 325 |
| 18990 | 15-860 | LG 325 |
| 20644 | 15-861 | LG 325 |
| 21510W | 15-863 | LG 326 |
| 23033 | 15-864 | LG 326 |
| 23560 | 15-865 | LG 326 |
| 23825 | 91-761 | LG 578 |
| 23825KT | 91-761 | LG 578 |
| 23933 | 15-867 | LG 326 |
| 23943 | 15-868 | LG 326 |
| 23990 | 15-869 | LG 326 |
| 24102 | 15-870 | LG 326 |
| 24590 | 91-767 | LG 577 |
| 24590KT | 91-767 | LG 577 |
| 2474A | 15-871 | LG 326 |
| 255 319 | 33-138 | LG 738 |
| 255 335 | 33-121 | LG 734 |
| 255 511 | 33-112 | LG 735 |
| 26354 | 15-872 | LG 326 |
| 26840W | 15-873 | LG 326 |
| 27652 | 15-874 | LG 326 |
| 27875 | 15-875 | LG 326 |
| 27920 | 15-938 | LG 326 |
| 28167 | 15-876 | LG 326 |
| 28975 | 15-877 | LG 326 |
| 29010 | 15-878 | LG 327 |
| 29229 | 15-879 | LG 327 |
| 29519 | 15-881 | LG 327 |
| 29523 | 15-882 | LG 327 |
| 30435 | 15-883 | LG 327 |
| 31306 | 91-764 | LG 579 |
| 31306KT | 91-764 | LG 579 |
| 31359 | 91-761 | LG 578 |
| 31359KT | 91-761 | LG 578 |
| 31615 | 15-884 | LG 327 |
| 31666 | 15-885 | LG 327 |
| 31700 | 115-216 | LG 327 |
| 31720 | 15-886 | LG 327 |
| 31748 | 15-887 | LG 327 |
| 320242 | 91-547 | LG 449 |
| 320243 | 91-547 | LG 449 |
| 320244 | 91-547 | LG 449 |
| 320245 | 91-547 | LG 449 |
| 320245B | 91-547 | LG 449 |
| 320246 | 91-547 | LG 449 |
| 320247 | 91-547 | LG 449 |
| 32650 | 15-888 | LG 327 |
| 32855 | 15-889 | LG 327 |
| 32906 | 15-890 | LG 327 |
| 32970 | 15-891 | LG 327 |
| 33050 | 15-892 | LG 327 |
| 33056 | 15-893 | LG 328 |
| 33105 | 15-894 | LG 328 |
| 33652 | 115-213 | LG 328 |
| 33710 | 15-895 | LG 328 |
| 34517 | 15-896 | LG 328 |
| 3492 | 15-897 | LG 328 |
| 35162 | 15-898 | LG 328 |
| 35252 | 15-899 | LG 328 |
| 35433 | 15-900 | LG 328 |
| 3546 | 15-901 | LG 328 |
| 3551000 | 33-334 | LG 730 |
| 3551000 | 33-335 | LG 730 |
| 3551000 | 33-336 | LG 730 |
| 35543 | 15-902 | LG 328 |
| 35583 | 15-947 | LG 328 |
| 36365 | 15-903 | LG 328 |
| 36371 | 15-904 | LG 328 |
| 3643100 | 33-112 | LG 735 |
| 36496 | 15-905 | LG 328 |
| 3652 | 15-906 | LG 328 |
| 37051 | 15-907 | LG 329 |
| 4152 | 115-215 | LG 329 |
| 430508 | 33-410 | LG 947 |
| 4927 | 15-943 | LG 329 |
| 5082 | 15-908 | LG 329 |
| 51344 | 15-911 | LG 329 |
| 53418 | 15-913 | LG 329 |
| 5711 | 15-914 | LG 329 |
| 6234 | 91-762 | LG 578 |
| 65172 | 91-766 | LG 579 |
| 66503 | 15-916 | LG 329 |
| 6814 | 15-918 | LG 329 |
| 6950 | 91-762 | LG 578 |
| 6950KT | 91-762 | LG 578 |
| 70003 | 15-920 | LG 329 |
| 70014 | 396-713* | LG 577 |
| 70014 | 91-557 | LG 545 |
| 70014 | 96-343* | LG 395 |
| 70018 | 78-021 | LG 832 |
| 70062KT | 396-713* | LG 577 |
| 70062KT | 96-343* | LG 395 |
| 70102 | 15-921 | LG 329 |
| 70104KT | 396-729* | LG 449 |
| 70104KT | 596-329* | LG 578 |
| 70104KT | 91-558 | LG 448 |
| 70104KT | 96-329* | LG 449 |
| 70117KT | 396-729* | LG 449 |
| 70117KT | 596-329* | LG 578 |
| 70117KT | 91-535 | LG 448 |
| 70117KT | 96-329* | LG 449 |
| 70132 | 15-922 | LG 329 |
| 70132 | 75-208 | LG 277 |
| 70134 | 396-712* | LG 449 |
| 70134 | 596-346* | LG 393 |
| 70134 | 91-547 | LG 449 |
| 70134 | 96-346* | LG 449 |
| 70134KT | 396-712* | LG 449 |
| 70134KT | 596-346* | LG 393 |
| 70134KT | 91-547 | LG 449 |
| 70134KT | 96-346* | LG 449 |
| 70142 | 91-547 | LG 449 |
| 70142KT | 396-712* | LG 449 |
| 70142KT | 596-346* | LG 393 |
| 70142KT | 91-534 | LG 578 |
| 70142KT | 96-346* | LG 449 |
| 7014KT | 396-713* | LG 577 |
| 7014KT | 91-557 | LG 545 |
| 7014KT | 96-343* | LG 395 |
| 70197 | 15-939 | LG 329 |
| 70341 | 15-940 | LG 329 |
| 70422 | 33-410 | LG 947 |
| 70580 | 15-923 | LG 330 |
| 70581 | 15-924 | LG 330 |
| 70820 | 83-284 | LG 818 |
| 70903 | 33-117 | LG 733 |
| 70939 | 83-283 | LG 818 |
| 70939 | 83-403 | LG 818 |
| 70983 | 15-926 | LG 330 |
| 71429 | 15-928 | LG 330 |
| 71506 | 15-929 | LG 330 |
| 71526 | 15-930 | LG 330 |
| 71579 | 15-931 | LG 330 |
| 71616 | 15-932 | LG 330 |
| 71803 | 30-095 | LG 206 |
| 71803 | 30-818 | LG 206 |
| 71803 | 69-395 | LG 206 |
| 71838 | 15-933 | LG 330 |
| 71879 | 15-934 | LG 330 |
| 72372 | 33-410 | LG 947 |
| 72505KT | 396-729* | LG 449 |
| 72505KT | 596-329* | LG 578 |
| 72505KT | 91-538 | LG 577 |
| 72505KT | 96-329* | LG 449 |
| 72517KT | 396-712* | LG 449 |
| 72517KT | 596-346* | LG 393 |
| 72517KT | 91-539 | LG 393 |
| 72517KT | 96-346* | LG 449 |
| 72818 | 15-935 | LG 330 |
| 72859 | 83-282 | LG 817 |
| 72859 | 83-402 | LG 817 |
| 72896KT | 396-713* | LG 577 |
| 72896KT | 396-729* | LG 449 |
| 72896KT | 596-329* | LG 578 |
| 72896KT | 91-535 | LG 448 |
| 72896KT | 96-329* | LG 449 |
| 72896KT | 96-343* | LG 395 |
| 72897KT | 396-729* | LG 449 |
| 72897KT | 596-329* | LG 578 |
| 72897KT | 91-558 | LG 448 |
| 72897KT | 96-329* | LG 449 |
| 72904KT | 396-729* | LG 449 |
| 72904KT | 596-329* | LG 578 |
| 72904KT | 91-538 | LG 577 |
| 72904KT | 96-329* | LG 449 |
| 73113 | 33-117 | LG 733 |
| 73263 | 15-936 | LG 330 |
| 73558 | 33-121 | LG 734 |
| 73559 | 33-138 | LG 738 |
| 74075 | 33-121 | LG 734 |
| DOP33-117WO | 33-117 | LG 733 |
| **WRIGHT STANDER** | | |
| 11990007 | 04-125 | LG 694 |
| 13990008 | 09-804 | LG 233 |
| 524-10001 | 33-019 | LG 948 |
| 71410001 | 33-154 | LG 741 |
| 71410006 | 33-190 | LG 741 |
| 71440001 | 396-726* | LG 391 |
| 71440001 | 596-344* | LG 495 |
| 71440001 | 91-622 | LG 536 |
| 71440001 | 96-344* | LG 536 |
| 71440002 | 396-735* | LG 452 |
| 71440002 | 596-308* | LG 548 |
| 71440002 | 91-620 | LG 470 |
| 71440002 | 96-308* | LG 456 |
| 71440003 | 396-727* | LG 467 |
| 71440003 | 596-347* | LG 448 |
| 71440003 | 91-626 | LG 552 |
| 71440003 | 96-347* | LG 387 |
| 71440004 | 392-165* | LG 580 |
| 71440004 | 92-165 | LG 580 |
| 71440005 | 393-601* | LG 582 |
| 71440005 | 593-601* | LG 386 |
| 71440005 | 91-039 | LG 487 |
| 71440005 | 93-601* | LG 432 |
| 71440007 | 396-702* | LG 480 |
| 71440007 | 596-702* | LG 388 |
| 71440007 | 91-135 | LG 387 |
| 71440007 | 96-702* | LG 491 |
| 71440008 | 392-165* | LG 580 |
| 71440008 | 92-165 | LG 580 |
| 71440009 | 393-601* | LG 582 |
| 71440009 | 593-601* | LG 386 |
| 71440009 | 91-039 | LG 487 |
| 71440009 | 93-601* | LG 432 |
| 71440010 | 396-702* | LG 480 |
| 71440010 | 596-702* | LG 388 |
| 71440010 | 91-135 | LG 387 |
| 71440010 | 96-702* | LG 491 |
| 71460002 | 75-952 | LG 330 |
| 71460003 | 75-949 | LG 330 |
| 71460006 | 78-044-1 | LG 834 |
| 71460007 | 82-053 | LG 905 |
| 71460010 | 75-951 | LG 331 |
| 71460011 | 75-948 | LG 331 |
| 71460012 | 15-948 | LG 253 |
| 71460013 | 15-949 | LG 255 |
| 71460017 | 45-220 | LG 232 |
| 71460022 | 82-057 | LG 905 |
| 71460033 | 115-218 | LG 331 |
| 71460064 | 15-056 | LG 331 |
| 71460071 | 15-057 | LG 331 |
| 71460123 | 15-055 | LG 331 |
| 71490001 | 396-735* | LG 452 |
| 71490001 | 596-308* | LG 548 |
| 71490001 | 92-743 | LG 418 |
| 71490001 | 96-308* | LG 456 |
| 72460004 | 72-735 | LG 1045 |
| 93460001 | 48-202 | LG 694 |
| 93460008 | 48-237 | LG 695 |
| **WW GRAINGER (DAYTON)** | | |
| 754-0145 | 75-145 | LG 300 |
| 754-0151 | 75-004 | LG 301 |
| 754-0178 | 75-179 | LG 310 |
| 754-0194 | 75-090 | LG 301 |
| 754-0201 | 75-441 | LG 334 |
| 754-0230 | 75-008 | LG 301 |
| 754-0234 | 75-441 | LG 334 |
| 754-0240 | 75-009 | LG 301 |
| 754-0241 | 75-012 | LG 301 |
| 754-0266 | 75-016 | LG 301 |
| 754-0935 | 75-092 | LG 304 |
| 954-0145 | 75-145 | LG 300 |
| 954-0145A | 75-145 | LG 300 |
| 954-0151 | 75-004 | LG 301 |
| 954-015A | 75-145 | LG 300 |
| 954-0178 | 75-179 | LG 310 |
| 954-0194 | 75-090 | LG 301 |
| 954-0201 | 75-441 | LG 334 |
| 954-0230 | 75-008 | LG 301 |
| 954-0234 | 75-441 | LG 334 |
| 954-0240 | 75-009 | LG 301 |
| 954-0241 | 75-012 | LG 301 |
| 954-0241A | 75-012 | LG 301 |
| 954-0266 | 75-016 | LG 301 |
| 954-0266A | 75-016 | LG 301 |
| 954-0935 | 75-092 | LG 304 |
| **YAMAKOYO** | | |
| 49-68 | 50-674 | LG 597 |

X



* OREGON® Gator™ replacement blade

| OEM No. | OREGON | Page |
|---|---|---|
| **YANMAR** | | |
| 129150-35150 | 83-301 | LG 816 |
| **YARDMAN** | | |
| 1626-69 | 34-005 | LG 821 |
| 2120-84 | 34-030 | LG 821 |
| 754-0145 | 75-145 | LG 300 |
| 754-0178 | 75-179 | LG 310 |
| 754-0194 | 75-090 | LG 301 |
| 754-0201 | 75-441 | LG 334 |
| 754-0230 | 75-008 | LG 301 |
| 754-0234 | 75-441 | LG 334 |
| 754-0240 | 75-009 | LG 301 |
| 754-0241 | 75-012 | LG 301 |
| 754-0266 | 75-016 | LG 301 |
| 754-0293 | 75-018 | LG 301 |
| 754-0350 | 75-035 | LG 302 |
| 754-0364 | 75-025 | LG 253 |
| 754-0371A | 75-028 | LG 302 |
| 754-0935 | 75-092 | LG 304 |
| 954-0145 | 75-145 | LG 300 |
| 954-0145A | 75-145 | LG 300 |
| 954-015A | 75-145 | LG 300 |
| 954-0178 | 75-179 | LG 310 |
| 954-0194 | 75-090 | LG 301 |
| 954-0201 | 75-441 | LG 334 |
| 954-0230 | 75-008 | LG 301 |
| 954-0234 | 75-441 | LG 334 |
| 954-0240 | 75-009 | LG 301 |
| 954-0241 | 75-012 | LG 301 |
| 954-0241A | 75-012 | LG 301 |
| 954-0266 | 75-016 | LG 301 |
| 954-0266A | 75-016 | LG 301 |
| 954-0293 | 75-018 | LG 301 |
| 954-0350 | 75-035 | LG 302 |
| 954-0364 | 75-025 | LG 253 |
| 954-0371A | 75-028 | LG 302 |
| 954-0935 | 75-092 | LG 304 |
| GW-7540350 | 75-035 | LG 302 |
| O652-74 | 45-091 | LG 249 |
| **YARDVARK** | | |
| 91483 | 55-807 | LG 994 |
| 91489 | 55-804-1 | LG 994 |
| **YAZOO-KEES** | | |
| 100023 | 15-951 | LG 297 |
| 100024 | 15-952 | LG 297 |
| 100026 | 75-269 | LG 252 |
| 101080 | 33-028 | LG 947 |
| 101141 | 15-954 | LG 297 |
| 101164 | 83-010 | LG 819 |
| 101164 | 83-400 | LG 819 |
| 101228 | 15-955 | LG 297 |
| 101736 | 15-956 | LG 297 |
| 101996 | 15-957 | LG 297 |
| 102424 | 33-002 | LG 946 |
| 102549 | 15-958 | LG 297 |
| 103030 | 60-408 | LG 700 |
| 104335 | 75-687 | LG 297 |
| 104336 | 75-688 | LG 297 |
| 106339 | 15-959 | LG 297 |
| 200-013 | 86-008 | LG 782 |
| 204-019 | 45-243 | LG 243 |
| 204-020 | 45-242 | LG 243 |
| 204-060 | 45-295 | LG 232 |
| 205-505 | 15-961 | LG 297 |
| 205-513 | 15-962 | LG 297 |
| 205-514 | 15-963 | LG 297 |
| 362024 | 82-306 | LG 874 |
| 362095 | 78-640 | LG 835 |
| 362096 | 78-641 | LG 835 |
| 362101 | 48-205 | LG 694 |
| 363033 | 09-802 | LG 233 |
| 363039 | 43-075 | |
| 363143 | 75-036 | LG 297 |
| 363144 | 75-221 | LG 280 |
| 363145 | 75-240 | LG 297 |
| 363150 | 34-024 | LG 822 |
| 363161 | 48-211 | LG 233 |
| 363173 | 45-220 | LG 232 |
| 363194 | 45-127 | LG 244 |
| 363199 | 45-078 | LG 230 |
| 363214 | 78-031 | LG 826 |
| 363312 | 83-282 | LG 817 |
| 363312 | 83-402 | LG 817 |
| 363333 | 07-100 | LG 774 |
| 393194 | 45-030 | LG 245 |
| 482005 | 82-307-0 | LG 874 |
| 483013 | 75-058 | LG 255 |
| 483036 | 34-007 | LG 826 |
| 483036 | 34-024 | LG 822 |
| 923408 | 33-027 | LG 947 |
| **ZAMA** | | |
| 0018002 | 49-021 | LG 629 |
| 0018004 | 49-023 | LG 629 |
| 0057003 | 49-028 | LG 769 |
| 11081200608 | 49-879 | LG 618 |
| 18002 | 49-021 | LG 629 |
| 18004 | 49-023 | LG 629 |
| 49-897 | 49-897 | LG 617 |
| 57003 | 49-028 | LG 769 |
| 57004 | 49-028 | LG 769 |
| 615-078 | 49-898 | LG 618 |
| 615-082 | 49-285 | LG 617 |
| 615-082 | 49-891-0 | LG 617 |
| 615-086 | 49-440 | LG 618 |
| 615-090 | 49-857 | LG 619 |
| 615-094 | 49-894 | LG 619 |
| 615-098 | 49-884 | LG 619 |
| 615-102 | 49-859 | LG 616 |
| 615-108 | 49-883 | LG 618 |
| 615-128 | 50-619 | LG 595 |
| 615-128 | 50-620 | LG 595 |
| 615-132 | 50-619 | LG 595 |
| 615-132 | 50-620 | LG 595 |
| 615-207 | 49-270 | LG 619 |
| 615-211 | 49-021 | LG 629 |
| 615-217 | 49-908 | LG 614 |
| 615-227 | 49-904 | LG 614 |
| 615-233 | 49-439 | LG 614 |
| 615-241 | 49-880 | LG 617 |
| 615-253 | 49-903 | LG 615 |
| 615-269 | 49-881 | LG 618 |
| 615-277 | 49-855 | LG 617 |
| 615-290 | 49-908 | LG 614 |
| 615-294 | 49-274 | LG 614 |
| 615-356 | 49-897 | LG 617 |
| 615-360 | 49-822-0 | LG 616 |
| 615-360 | 49-865 | LG 616 |
| 615-362 | 49-819-0 | LG 615 |
| 615-362 | 49-861 | LG 615 |
| 615-364 | 49-866 | LG 617 |
| 615-366 | 49-818-0 | LG 615 |
| 615-368 | 49-856 | LG 619 |
| 615-370 | 49-817-0 | LG 616 |
| 615-370 | 49-864 | LG 616 |
| 615-374 | 49-437 | LG 614 |
| 615-378 | 49-901 | LG 615 |
| 615-390 | 49-287 | LG 620 |
| 615-394 | 49-904 | LG 614 |
| 615-423 | 49-906 | LG 615 |
| 615-439 | 49-287 | LG 620 |
| 615-441 | 49-441 | LG 618 |
| 615-455 | 49-854 | LG 615 |
| 615-467 | 49-288 | LG 619 |
| 615-488 | 49-442 | LG 619 |
| 615-504 | 49-286 | LG 615 |
| 615-504 | 49-438 | LG 615 |
| 615-526 | 49-903 | LG 615 |
| 615-566 | 49-274 | LG 614 |
| 615-614 | 49-285 | LG 617 |
| 615-614 | 49-891-0 | LG 617 |
| 615-621 | 49-273 | LG 620 |
| 615-706 | 49-288 | LG 619 |
| 615-776 | 49-283 | LG 616 |
| 615-776 | 49-887-0 | LG 616 |
| 615-780 | 49-284 | LG 617 |
| 615-780 | 49-888-0 | LG 617 |
| 615-792 | 49-028 | LG 769 |
| 615-804 | 49-028 | LG 769 |
| 615-827 | 49-836-0 | LG 616 |
| 615-843 | 49-863 | LG 616 |
| 82-75-7 | 49-021 | LG 629 |
| C1U-K47 | 50-619 | LG 595 |
| C1U-K51 | 50-619 | LG 595 |
| C1U-K52 | 50-619 | LG 595 |
| C1U-K52 | 50-620 | LG 595 |
| C1U-K54 | 50-619 | LG 595 |
| C1U-K54 | 50-620 | LG 595 |
| C1U-K54A | 50-619 | LG 595 |
| C1U-K54A | 50-620 | LG 595 |
| GND04 | 49-885-0 | LG 619 |
| GND07 | 49-859 | LG 616 |
| GND08 | 49-860 | LG 616 |
| GND1 | 49-854 | LG 615 |
| GND-1 | 49-854 | LG 615 |
| GND12 | 49-855 | LG 617 |
| GND-12 | 49-855 | LG 617 |
| GND13 | 49-856 | LG 619 |
| GND-13 | 49-856 | LG 619 |
| GND14 | 49-880 | LG 617 |
| GND-14 | 49-880 | LG 617 |
| GND-15 | 49-855 | LG 617 |
| GND17 | 49-880 | LG 617 |
| GND-17 | 49-880 | LG 617 |
| GND-18 | 49-270 | LG 619 |
| GND2 | 49-881 | LG 618 |
| GND-2 | 49-881 | LG 618 |
| GND-21 | 49-893 | LG 617 |
| GND25 | 49-857 | LG 619 |
| GND-25 | 49-857 | LG 619 |
| GND-28 | 49-883 | LG 618 |
| GND-29 | 49-894 | LG 619 |
| GND-33 | 49-884 | LG 619 |
| GND-35 | 49-894 | LG 619 |
| GND-39 | 49-884 | LG 619 |
| GND4 | 49-282 | LG 619 |
| GND4 | 49-885-0 | LG 619 |
| GND-4 | 49-282 | LG 619 |
| GND-53 | 49-322 | LG 620 |
| GND-56 | 49-442 | LG 619 |
| GND7 | 49-859 | LG 616 |
| GND-7 | 49-859 | LG 616 |
| GND8 | 49-860 | LG 616 |
| GND-8 | 49-860 | LG 616 |
| GND-84 | 49-313 | LG 620 |
| GND-88 | 49-323 | LG 621 |
| GND-89 | 49-320 | LG 621 |
| K500018 | 49-837-0 | LG 615 |
| K500024 | 49-818-0 | LG 615 |
| K500028 | 49-818-0 | LG 615 |
| K500033 | 49-818-0 | LG 615 |
| K500036 | 49-818-0 | LG 615 |
| K500038 | 49-818-0 | LG 615 |
| KR3 | 49-836-0 | LG 616 |
| R8-36 | 49-823-0 | LG 618 |
| RB 28 | 49-866 | LG 617 |
| RB01 | 49-819-0 | LG 615 |
| RB01 | 49-861 | LG 615 |
| RB-01 | 49-819-0 | LG 615 |
| RB-01 | 49-861 | LG 615 |
| RB06 | 49-837-0 | LG 615 |
| RB-06 | 49-837-0 | LG 615 |
| RB1 | 49-861 | LG 615 |
| RB-1 | 49-819-0 | LG 615 |
| RB-1 | 49-861 | LG 615 |
| RB-10 | 49-818-0 | LG 615 |
| RB-100 | 49-441 | LG 618 |
| RB105 | 49-273 | LG 620 |
| RB-105 | 49-273 | LG 620 |
| RB11 | 49-863 | LG 616 |
| RB-11 | 49-863 | LG 616 |
| RB-114 | 49-287 | LG 620 |
| RB129 | 49-277 | LG 620 |
| RB-129 | 49-277 | LG 620 |
| RB142 | 49-275 | LG 620 |
| RB-142 | 49-275 | LG 620 |
| RB15 | 49-836-0 | LG 616 |
| RB-15 | 49-836-0 | LG 616 |
| RB-151 | 49-319 | LG 620 |
| RB-155 | 49-318 | LG 621 |
| RB-164 | 49-318 | LG 621 |
| RB-180 | 49-318 | LG 621 |
| RB20 | 49-817-0 | LG 616 |
| RB20 | 49-864 | LG 616 |
| RB-20 | 49-817-0 | LG 616 |
| RB-20 | 49-864 | LG 616 |
| RB21 | 49-822-0 | LG 616 |
| RB21 | 49-865 | LG 616 |
| RB-21 | 49-822-0 | LG 616 |
| RB-21 | 49-865 | LG 616 |
| RB22 | 49-865 | LG 616 |
| RB-22 | 49-897 | LG 617 |
| RB-23 | 49-283 | LG 616 |
| RB-23 | 49-887-0 | LG 616 |
| RB-26 | 49-284 | LG 617 |
| RB-26 | 49-888-0 | LG 617 |
| RB-27 | 49-897 | LG 617 |
| RB-271 | 49-271 | LG 614 |
| RB28 | 49-866 | LG 617 |
| RB-28 | 49-866 | LG 617 |
| RB-29 | 49-285 | LG 617 |
| RB-29 | 49-891-0 | LG 617 |
| RB31 | 49-899 | LG 617 |
| RB-31 | 49-899 | LG 617 |
| RB36 | 49-823-0 | LG 618 |
| RB36 | 49-867 | LG 618 |
| RB-36 | 49-823-0 | LG 618 |
| RB-36 | 49-867 | LG 618 |
| RB-39 | 49-274 | LG 614 |
| RB-39 | 49-902 | LG 614 |
| RB-40 | 49-437 | LG 614 |
| RB-41 | 49-898 | LG 618 |
| RB42 | 49-879 | LG 618 |
| RB-42 | 49-879 | LG 618 |
| RB-44 | 49-903 | LG 615 |
| RB-45 | 49-286 | LG 615 |
| RB-45 | 49-438 | LG 615 |
| RB47 | 49-272 | LG 614 |
| RB-47 | 49-272 | LG 614 |
| RB-59 | 49-286 | LG 615 |
| RB-59 | 49-901 | LG 615 |
| RB6 | 49-837-0 | LG 615 |
| RB-6 | 49-837-0 | LG 615 |
| RB-61 | 49-906 | LG 615 |
| RB-64 | 49-439 | LG 614 |
| RB-66 | 49-440 | LG 618 |
| RB-69 | 49-904 | LG 614 |
| RB71 | 49-271 | LG 614 |
| RB-73 | 49-908 | LG 614 |
| RB77 | 49-274 | LG 614 |
| RB-89 | 49-288 | LG 619 |
| RB99 | 49-276 | LG 620 |
| RB-99 | 49-276 | LG 620 |
| RB-K66A | 50-621 | LG 595 |
| ZAM-C1U-K52 | 50-619 | LG 595 |
| ZAM-C1U-K52 | 50-620 | LG 595 |
| ZAM-C1U-K54A | 50-619 | LG 595 |

X

* OREGON® Gator™ replacement blade

# 2019 OEM X-Reference

| OEM No. | OREGON | Page |
|---|---|---|
| **ZAMA** | | |
| ZAM-C1U-K54A | 50-620 | LG 595 |
| ZAM-GND-12 | 49-855 | LG 617 |
| ZAM-GND-17 | 49-880 | LG 617 |
| ZAM-GND-18 | 49-270 | LG 619 |
| ZAM-GND-2 | 49-881 | LG 618 |
| ZAM-GND-21 | 49-893 | LG 617 |
| ZAM-GND-25 | 49-857 | LG 619 |
| ZAM-GND-28 | 49-883 | LG 618 |
| ZAM-GND-33 | 49-884 | LG 619 |
| ZAM-GND-39 | 49-884 | LG 619 |
| ZAM-GND-4 | 49-282 | LG 619 |
| ZAM-GND-53 | 49-322 | LG 620 |
| ZAM-GND-56 | 49-442 | LG 619 |
| ZAM-GND-7 | 49-859 | LG 616 |
| ZAM-GND-8 | 49-860 | LG 616 |
| ZAM-GND-89 | 49-320 | LG 621 |
| ZAM-RB-1 | 49-819-0 | LG 615 |
| ZAM-RB-1 | 49-861 | LG 615 |
| ZAM-RB-10 | 49-818-0 | LG 615 |
| ZAM-RB-100 | 49-441 | LG 618 |
| ZAM-RB-105 | 49-273 | LG 620 |
| ZAM-RB-11 | 49-863 | LG 616 |
| ZAM-RB-114 | 49-287 | LG 620 |
| ZAM-RB-129 | 49-277 | LG 620 |
| ZAM-RB-142 | 49-275 | LG 620 |
| ZAM-RB-23 | 49-283 | LG 616 |
| ZAM-RB-23 | 49-887-0 | LG 616 |
| ZAM-RB-26 | 49-284 | LG 617 |
| ZAM-RB-26 | 49-888-0 | LG 617 |
| ZAM-RB-27 | 49-897 | LG 617 |
| ZAM-RB-29 | 49-285 | LG 617 |
| ZAM-RB-29 | 49-891-0 | LG 617 |
| ZAM-RB-31 | 49-899 | LG 617 |
| ZAM-RB-39 | 49-274 | LG 614 |
| ZAM-RB-40 | 49-437 | LG 614 |
| ZAM-RB-41 | 49-898 | LG 618 |
| ZAM-RB-42 | 49-879 | LG 618 |
| ZAM-RB-44 | 49-903 | LG 615 |
| ZAM-RB-45 | 49-286 | LG 615 |
| ZAM-RB-45 | 49-438 | LG 615 |
| ZAM-RB-47 | 49-272 | LG 614 |
| ZAM-RB-59 | 49-901 | LG 615 |
| ZAM-RB-6 | 49-837-0 | LG 615 |
| ZAM-RB-61 | 49-906 | LG 615 |
| ZAM-RB-64 | 49-439 | LG 614 |
| ZAM-RB-66 | 49-440 | LG 618 |
| ZAM-RB-69 | 49-904 | LG 614 |
| ZAM-RB-73 | 49-908 | LG 614 |
| ZAM-RB-89 | 49-288 | LG 619 |
| ZAM-RB-99 | 49-276 | LG 620 |
| ZF2 | 07-208 | LG 779 |
| ZF3 | 07-209 | LG 779 |
| ZF4 | 07-210 | LG 779 |
| ZF5 | 07-211 | LG 779 |
| **ZAYERS** | | |
| 754-0151 | 75-004 | LG 301 |
| 754-0201 | 75-441 | LG 334 |
| 754-0234 | 75-441 | LG 334 |
| 754-0935 | 75-092 | LG 304 |
| 954-0151 | 75-004 | LG 301 |
| 954-0201 | 75-441 | LG 334 |
| 954-0234 | 75-441 | LG 334 |
| 954-0935 | 75-092 | LG 304 |
| **ZENAOH** | | |
| 1272-06020 | 49-812 | LG 612 |
| 1272-06030 | 49-816 | LG 612 |
| 2670-06020 | 49-812 | LG 612 |
| 2670-06030 | 49-816 | LG 612 |
| 3039-06030 | 49-816 | LG 612 |
| 3306-81380 | 55-342 | LG 627 |
| 3310-81310 | 49-021 | LG 629 |
| 3310-81380 | 55-342 | LG 627 |
| 3359-06010 | 49-835 | LG 611 |
| 3496-06020 | 49-835 | LG 611 |
| **ZIPPER** | | |
| 100-1015 | 78-044-1 | LG 834 |
| 10090295 | 391-598* | LG 583 |
| 10090295 | 91-598 | LG 583 |
| 1009049-5 | 391-598* | LG 583 |
| 10090525 | 396-737* | LG 583 |
| 10090545 | 396-737* | LG 583 |
| 10090575 | 396-737* | LG 583 |
| 1009068-5 | 391-598* | LG 583 |





* OREGON® Gator™ replacement blade

## ARNOLD

| PART No. | OREGON | Page |
|---|---|---|
| 490-100-0024 | 95-057 | LG 380 |
| 490-100-0025 | 195-021 | LG 468 |
| 490-100-0033 | 95-051 | LG 465 |
| 490-100-0035 | 94-322 | LG 520 |
| 490-100-0051 | 97-001 | LG 527 |
| 490-100-0053 | 69-260-0 | |
| 490-100-0058 | 69-245-0 | |
| 490-100-0059 | 69-246-0 | |
| 490-100-0065 | 96-607 | LG 571 |
| 490-100-0069 | 69-259-0 | |
| 490-100-0072 | 97-001 | LG 527 |
| 490-100-0076 | 92-011 | LG 490 |
| 490-100-0081 | 69-261-0 | |
| 490-100-0082 | 69-262-0 | |
| 490-100-0090 | 69-260-0 | |
| 490-100-0091 | 69-261-0 | |
| 490-100-0092 | 69-262-0 | |
| 490-100-0096 | 69-245-0 | |
| 490-100-0097 | 69-246-0 | |
| 490-100-0102 | 96-607 | LG 571 |
| 490-100-0111 | 690-617-0 | LG 368 |
| 490-100-0129 | 95-621 | LG 402 |
| 490-100-0130 | 95-076 | LG 404 |
| 490-100-0131 | 195-021 | LG 468 |
| 490-100-C089 | 198-049 | LG 518 |
| 490-100-H025 | 195-021 | LG 468 |
| 490-100-M084 | 198-049 | LG 518 |
| 490-100-M085 | 98-051 | LG 521 |
| 490-100-M086 | 198-049 | LG 518 |
| 490-100-M087 | 98-050 | LG 521 |
| 490-100-M088 | 98-050 | LG 521 |
| 490-105-0014 | 40-141 | LG 585 |
| 490-105-0015 | 40-110 | LG 584 |
| 490-105-0022 | 40-110 | LG 584 |
| 490-105-0023 | 40-316 | LG 586 |
| 490-105-0024 | 40-130 | LG 586 |
| 490-105-0026 | 40-121 | LG 584 |
| 490-110-0021 | 195-005 | LG 373 |
| 490-110-0022 | 195-032 | LG 425 |
| 490-110-0024 | 95-052 | LG 398 |
| 490-110-0025 | 195-033 | LG 400 |
| 490-110-0026 | 191-392 | LG 488 |
| 490-110-0027 | 91-389 | LG 538 |
| 490-110-0028 | 91-380 | LG 538 |
| 490-110-0029 | 191-139 | LG 491 |
| 490-110-0030 | 191-108 | LG 484 |
| 490-110-0037 | 195-003 | LG 400 |
| 490-110-0038 | 95-045 | LG 374 |
| 490-110-0039 | 95-068 | LG 376 |
| 490-110-0040 | 95-018 | LG 399 |
| 490-110-0045 | 195-062 | LG 376 |
| 490-110-0051 | 98-054 | LG 574 |
| 490-110-0062 | 97-003 | |
| 490-110-0063 | 97-024 | LG 525 |
| 490-110-0064 | 195-072 | LG 530 |
| 490-110-0065 | 97-017 | LG 537 |
| 490-110-0067 | 98-629 | LG 412 |
| 490-110-0076 | 91-938 | LG 514 |
| 490-110-0083 | 97-020 | LG 526 |
| 490-110-0087 | 97-109 | LG 525 |
| 490-110-0092 | 96-900 | LG 526 |
| 490-110-0094 | 92-615 | LG 491 |
| 490-110-0134 | 192-106 | LG 491 |
| 490-110-0135 | 195-005 | LG 373 |
| 490-110-0136 | 195-005 | LG 373 |
| 490-110-0137 | 98-629 | LG 412 |
| 490-110-0140 | 92-615 | LG 491 |
| 490-110-0141 | 96-900 | LG 526 |
| 490-110-0144 | 92-676 | LG 491 |
| 490-110-0145 | 92-675 | LG 484 |
| 490-110-0146 | 95-074 | LG 533 |
| 490-110-0147 | 195-070 | LG 469 |
| 490-110-0148 | 95-068 | LG 376 |
| 490-110-0149 | 195-062 | LG 376 |
| 490-110-0150 | 195-072 | LG 530 |
| 490-110-0153 | 195-005 | LG 373 |
| 490-110-C109 | 98-090 | LG 519 |
| 490-110-C119 | 98-090 | LG 519 |
| 490-110-C120 | 92-015 | LG 407 |
| 490-110-C121 | 91-440 | LG 408 |
| 490-110-C122 | 198-059 | LG 403 |
| 490-110-C124 | 98-085 | LG 561 |
| 490-110-C125 | 98-072 | LG 408 |
| 490-110-C127 | 98-087 | LG 407 |
| 490-110-C128 | 91-057 | LG 409 |
| 490-110-C129 | 91-058 | LG 411 |
| 490-110-C130 | 98-095 | LG 521 |
| 490-110-C131 | 98-096 | LG 404 |
| 490-110-M108 | 98-093 | LG 411 |
| 490-110-M110 | 98-096 | LG 404 |
| 490-110-M112 | 98-499 | LG 519 |
| 490-110-M113 | 98-057 | LG 513 |
| 490-110-M114 | 198-058 | LG 517 |
| 490-110-M115 | 198-059 | LG 403 |
| 490-110-M116 | 98-054 | LG 574 |
| 490-110-M117 | 98-072 | LG 408 |
| 490-110-M126 | 198-086 | LG 565 |

## BETTER OUTDOORS

| PART No. | OREGON | Page |
|---|---|---|
| 10480-S | 596-327 | LG 434 |
| 10480-S | 91-369 | LG 434 |
| 10480-S | 91-373 | LG 383 |
| 10480-S | 96-327 | LG 417 |
| 10661-S | 396-716 | LG 451 |
| 10661-S | 596-310 | LG 447 |
| 10661-S | 91-180 | LG 460 |
| 10661-S | 91-183 | LG 370 |
| 10661-S | 91-313 | LG 494 |
| 10661-S | 91-368 | LG 460 |
| 10661-S | 96-310 | LG 444 |
| 10661-S | 99-127 | LG 375 |
| ACC-0022 | 396-716 | LG 451 |
| ACC-0022 | 596-310 | LG 447 |
| ACC-0022 | 91-180 | LG 460 |
| ACC-0022 | 91-183 | LG 370 |
| ACC-0022 | 91-313 | LG 494 |
| ACC-0022 | 91-368 | LG 460 |
| ACC-0022 | 96-310 | LG 444 |
| ACC-0022 | 99-127 | LG 375 |

## CRAFTSMAN

| PART No. | OREGON | Page |
|---|---|---|
| 24676 | 195-005 | LG 373 |

## J THOMAS

| PART No. | OREGON | Page |
|---|---|---|
| AF-43 | 30-421 | LG 220 |
| AF-6029 | 83-010 | LG 819 |
| AF-9862 | 83-012 | LG 819 |
| BC-761 | 72-747 | LG 1036 |
| BL-007 | 97-024 | LG 525 |
| BL-010 | 98-050 | LG 521 |
| BL-011 | 198-058 | LG 517 |
| BL-012 | 98-054 | LG 574 |
| BL-013 | 98-061 | LG 404 |
| BL-014 | 198-059 | LG 403 |
| BL-016 | 98-001 | LG 517 |
| BL-019 | 98-096 | LG 404 |
| BL-020 | 97-022 | LG 524 |
| BL-021 | 97-001 | LG 527 |
| BL-022 | 98-072 | LG 408 |
| BL-023 | 98-097 | LG 514 |
| BL-025 | 93-025 | LG 482 |
| BL-028 | 92-028 | LG 433 |
| BL-038 | 91-181 | LG 495 |
| BL-039 | 91-170 | LG 437 |
| BL-071 | 98-071 | LG 411 |
| BL-073 | 91-073 | LG 512 |
| BL-085 | 91-369 | LG 434 |
| BL-091 | 98-094 | LG 514 |
| BL-120 | 91-507 | LG 415 |
| BL-122 | 92-607 | LG 434 |
| BL-124 | 592-608 | LG 434 |
| BL-179 | 92-015 | LG 407 |
| BL-192 | 91-380 | LG 538 |
| BL-194 | 91-381 | LG 483 |
| BL-278 | 98-081 | LG 406 |
| BL-279 | 392-204 | LG 443 |
| BL-294 | 98-080 | LG 512 |
| BL-300 | 96-300 | LG 519 |
| BL-303 | 96-344 | LG 536 |
| BL-351 | 96-351 | LG 408 |
| BL-369 | 91-369 | LG 434 |
| BL-373 | 596-373 | LG 512 |
| BL-379 | 596-373 | LG 512 |
| BL-381 | 90-697 | LG 406 |
| BL-391 | 91-394 | LG 489 |
| BL-406 | 492-726 | LG 436 |
| BL-507 | 492-731 | LG 436 |
| BL-697 | 90-697 | LG 406 |
| BL-699 | 96-699 | LG 442 |
| BL-709 | 96-309 | LG 488 |
| BL-716 | 96-310 | LG 444 |
| BL-717 | 96-308 | LG 456 |
| BL-718 | 96-344 | LG 536 |
| BL-721 | 96-702 | LG 491 |
| BL-724 | 96-319 | LG 415 |
| BL-732 | 96-332 | LG 484 |
| BL-734 | 396-734 | LG 489 |
| BL-741 | 94-621 | LG 570 |
| BL-744 | 96-724 | LG 430 |
| BL-745 | 94-615 | LG 370 |
| BL-748 | 94-618 | LG 506 |
| BL-750 | 96-321 | LG 436 |
| BL-751 | 96-322 | LG 567 |
| BL-752 | 396-752 | LG 415 |
| BL-753 | 392-204 | LG 443 |
| BL-754 | 96-749 | LG 433 |
| BL-764 | 392-204 | LG 443 |
| BL-905 | 96-705 | LG 573 |
| BL-912 | 91-539 | LG 393 |
| BL-915 | 94-615 | LG 370 |
| BL-916 | 593-600 | LG 385 |
| BL-917 | 96-310 | LG 444 |
| BL-918 | 96-344 | LG 536 |
| BL-920 | 96-620 | LG 551 |
| BL-921 | 96-347 | LG 387 |
| BL-921 | 96-702 | LG 491 |
| BL-923 | 96-323 | LG 477 |
| BL-924 | 96-319 | LG 415 |
| BL-929 | 91-538 | LG 577 |
| BO-009 | 93-005 | LG 447 |
| BO-0102 | 93-006 | LG 444 |
| BO-089 | 91-373 | LG 383 |
| BO-15A | 93-009 | LG 476 |
| BO-16 | 93-005 | LG 447 |
| BO-175 | 91-368 | LG 460 |
| BO-178 | 91-335 | LG 420 |
| BO-17A | 93-010 | LG 432 |
| BO-18 | 93-006 | LG 444 |
| BO-21A | 93-008 | LG 510 |
| BO-269 | 91-311 | LG 439 |
| BO-3374 | 91-256 | LG 437 |
| BO-357 | 91-394 | LG 489 |
| BO-6122 | 91-443 | LG 489 |
| BO-6167 | 91-531 | LG 393 |
| BO-618 | 91-508 | LG 419 |
| BO-845 | 191-392 | LG 488 |
| BO-900 | 96-600 | LG 569 |
| BO-920 | 94-620 | LG 414 |
| BO-921 | 94-621 | LG 570 |
| BO-926 | 96-602 | LG 572 |
| BO-JD11 | 91-395 | LG 493 |
| BO-JD17 | 99-126 | LG 501 |
| BT-070 | 75-572 | LG 335 |
| BT-071 | 75-573 | LG 335 |
| BT-141 | 75-441 | LG 334 |
| BT-244 | 75-326 | LG 334 |
| BT-245 | 75-336 | LG 334 |
| BT-245GR | 75-144 | LG 284 |
| BT-248GR | 75-589 | LG 335 |
| BT-251 | 75-338 | LG 334 |
| BT-255 | 75-552 | LG 334 |
| BT-258 | 75-435 | LG 334 |
| BT-294 | 75-593 | LG 335 |
| BT-306 | 75-554 | LG 334 |
| BT-314 | 75-180 | LG 254 |
| BT-315 | 75-128 | LG 253 |
| BT-368 | 75-491 | LG 335 |
| BT-375 | 75-114 | LG 281 |
| BT-376 | 75-115 | LG 260 |
| BT-381 | 75-594 | LG 335 |
| BT-385 | 75-458 | LG 334 |
| BT-402 | 75-177 | LG 281 |
| BT-405 | 75-095 | LG 268 |
| BT-411 | 75-044 | LG 313 |
| BT-414 | 75-461 | LG 334 |
| BT-423 | 75-113 | LG 281 |
| BT-462 | 75-186 | LG 281 |
| BT-463 | 75-188 | LG 256 |
| BT-472 | 75-444 | LG 334 |
| BT-475 | 75-568 | LG 334 |

X

# 2019 Aftermarket X-Reference

## J THOMAS

| PART No. | OREGON | Page |
|---|---|---|
| BT-476 | 75-503 | LG 256 |
| BT-499 | 75-181 | LG 280 |
| BT-587 | 75-052 | LG 313 |
| CH-226 | 60-410 | LG 703 |
| CU-21 | 492-730 | LG 440 |
| CU-22 | 492-732 | LG 442 |
| CU-317 | 392-206 | LG 436 |
| CU-322 | 392-203 | LG 442 |
| CU-324 | 392-204 | LG 443 |
| DE-1785 | 91-394 | LG 489 |
| DE-2215 | 192-106 | LG 491 |
| DE-881 | 91-078 | LG 490 |
| DE-882 | 91-395 | LG 493 |
| DE-939 | 91-079 | LG 485 |
| DE-940 | 91-138 | LG 488 |
| DE-941 | 91-078 | LG 490 |
| DE-942 | 91-395 | LG 493 |
| DX-010 | 91-505 | LG 477 |
| DX-011 | 91-502 | LG 477 |
| DX-167 | 91-506 | LG 473 |
| EB-1 | 40-141 | LG 585 |
| EB-1471 | 40-807 | LG 585 |
| EB-15 | 40-503 | LG 589 |
| EB-17 | 40-518 | LG 589 |
| EB-2 | 40-139 | LG 584 |
| EB-2110 | 40-402 | LG 589 |
| EB-2670 | 40-130 | LG 586 |
| EB-6276 | 40-840 | LG 588 |
| EB-731 | 40-514 | LG 589 |
| EB-9 | 40-316 | LG 586 |
| EB-STAR-10 | 40-845 | LG 588 |
| EB-STAR-9 | 40-843 | LG 588 |
| EV-25 | 91-482 | LG 434 |
| EV-27 | 92-054 | LG 434 |
| EX-16 | 92-029 | LG 435 |
| EX-18 | 92-030 | LG 567 |
| EX-21 | 92-031 | LG 433 |
| EX-24 | 92-057 | LG 442 |
| EX-3426 | 91-374 | LG 442 |
| EX-36 | 75-031 | LG 278 |
| GC-589 | 07-315 | LG 772 |
| GR-130 | 78-021 | LG 832 |
| GR-3377 | 91-557 | LG 545 |
| GR-3379 | 91-558 | LG 448 |
| GR-3380 | 91-532 | LG 448 |
| GR-3382 | 91-547 | LG 449 |
| GR-40-60 | 91-253 | LG 415 |
| GR-50 | 91-242 | LG 371 |
| GR-6171 | 91-254 | LG 456 |
| GR-6180 | 91-253 | LG 415 |
| GR-6323 | 91-535 | LG 448 |
| GR-6330 | 91-557 | LG 545 |
| GR-6402 | 91-533 | LG 394 |
| GR-6403 | 91-544 | LG 397 |
| HD-5009 | 91-516 | LG 457 |
| HD-5013 | 91-517 | LG 457 |
| HD-5100 | 92-101 | LG 458 |
| HD-5104 | 92-102 | LG 458 |
| HU-2160 | 92-044 | LG 471 |
| HU-2161 | 90-208 | LG 502 |
| HU-683 | 90-205 | LG 501 |
| HU-687 | 92-045 | LG 474 |
| HU-695 | 92-208 | LG 472 |
| JT-0321 | 75-582 | LG 254 |
| JT-05 | 75-221 | LG 280 |
| JT-0589 | 75-212 | LG 268 |
| JT-06 | 75-072 | LG 268 |
| JT-08 | 75-223 | LG 269 |
| JT-102 | 34-007 | LG 826 |
| JT-1027 | 34-028 | LG 821 |
| JT-102A | 78-031 | LG 826 |
| JT-107 | 72-745 | LG 1033 |
| JT-109 | 48-200 | LG 694 |
| JT-109A | 48-205 | LG 694 |
| JT-109BU | 78-041 | LG 823 |
| JT-112B | 78-649 | LG 841 |
| JT-112BU | 78-644 | LG 835 |
| JT-112C | 78-641 | LG 835 |
| JT-119BU | 78-646 | LG 841 |
| JT120EX | 78-640 | LG 835 |
| JT-126 | 43-075 | |
| JT-130S | 82-306 | LG 874 |
| JT-166 | 78-111 | LG 826 |
| JT-1701 | 48-320 | LG 238 |
| JT-17014 | 78-678 | LG 835 |
| JT-1703 | 09-808 | LG 697 |
| JT-1704 | 09-803 | LG 697 |
| JT-1952 | 09-802 | LG 233 |
| JT-2000 | 82-305 | LG 908 |
| JT-211GD | 75-125 | LG 269 |
| JT-2502N | 45-015 | LG 233 |
| JT-265 | 45-038 | LG 224 |
| JT-305A | 09-801 | LG 229 |
| JT-3062 | 70-377 | LG 960 |
| JT-3143 | 48-148 | LG 695 |
| JT-3144 | 78-651 | LG 835 |
| JT-51160 | 75-165 | LG 322 |
| JT-5290 | 75-205 | LG 322 |
| JT-5750 | 75-570 | LG 335 |
| JT-61 | 75-546 | LG 334 |
| JT6101 | 75-222 | LG 252 |
| JT-6114 | 75-558 | LG 253 |
| JT-6115 | 75-443 | LG 334 |
| JT-7036 | 68-210 | LG 962 |
| JT-750 | 48-211 | LG 233 |
| JT-752 | 78-116 | LG 826 |
| JT-9801 | 78-673 | LG 839 |
| JT-9807 | 04-125 | LG 694 |
| JT-9808 | 09-804 | LG 233 |
| JT-9809 | 45-030 | LG 245 |
| JT-9811 | 45-188 | LG 230 |
| JT-9818 | 42-008 | LG 945 |
| JT-9820 | 75-580 | LG 335 |
| JT-9821 | 33-386 | LG 942 |
| JT-98265 | 75-047 | LG 313 |
| JT-9826A | 78-003 | LG 839 |
| JT-9827 | 45-257 | LG 245 |
| JT-9842 | 46-416 | LG 718 |
| JT-9845 | 48-145 | LG 698 |
| JT-9851 | 48-141 | LG 249 |
| JT-9870 | 48-202 | LG 694 |
| JT-9871 | 48-006 | LG 694 |
| JT-9874 | 78-642 | LG 841 |
| JT-9879 | 75-260 | LG 312 |
| JT-9884 | 75-054 | LG 312 |
| JT-9885 | 75-154 | LG 312 |
| JT-9886 | 75-055 | LG 255 |
| JT-9887 | 75-043 | LG 312 |
| JT-9888 | 75-058 | LG 255 |
| JT-9891 | 75-578 | LG 335 |
| JT-98915 | 72-795 | LG 1044 |
| JT-9893 | 75-036 | LG 297 |
| JT-9896 | 75-048 | LG 313 |
| JT-9897 | 78-300 | LG 833 |
| JT-9898 | 78-121 | LG 827 |
| KU-540 | 91-433 | LG 498 |
| KU-541 | 92-048 | LG 498 |
| KU-551 | 92-116 | LG 500 |
| KU-552 | 92-130 | LG 499 |
| KU-571 | 91-493 | LG 500 |
| LB-849 | 92-011 | LG 490 |
| LE-337 | 98-091 | LG 516 |
| LE-388 | 98-071 | LG 411 |
| SG-3172 | 91-620 | LG 470 |
| SG-3180 | 91-181 | LG 495 |
| SG-3188 | 91-628 | LG 387 |
| SG-3403 | 91-620 | LG 470 |
| SG-3404 | 91-622 | LG 536 |
| SG-3409 | 91-621 | LG 563 |
| SG-3426 | 91-627 | LG 482 |
| SG-3434 | 91-209 | LG 552 |
| SG-3442 | 91-622 | LG 536 |
| SG-3445 | 91-628 | LG 387 |
| SG-608 | 91-638 | LG 426 |
| SN-2007 | 99-107 | LG 551 |
| SN-20NEW | 99-103 | LG 551 |
| SR-001 | 31-230 | LG 937 |
| SR-003 | 31-240 | LG 937 |
| SR-029 | 31-250 | LG 937 |
| SR-306 | 31-180 | LG 937 |
| SR-896 | 31-260 | LG 937 |
| TCU15881 | 91-078 | LG 490 |
| TD-1541 | 70-366 | LG 961 |
| TD-1542 | 70-367 | LG 961 |
| TD-1543 | 70-368 | LG 961 |
| TD-1544 | 70-369 | LG 961 |
| TD-1545 | 70-370 | LG 961 |
| TD-1546 | 70-371 | LG 961 |
| TD-1547 | 70-372 | LG 961 |
| TD-1548 | 70-373 | LG 961 |
| TD-2804 | 70-364 | LG 961 |
| TD-484 | 78-680 | LG 840 |
| TO-08901 | 75-571 | LG 335 |
| TO-3570 | 07-312 | LG 773 |
| TO-71107 | 30-026 | LG 208 |
| TO-85309 | 45-002 | LG 237 |
| TOR-1006 | 94-017 | LG 441 |
| TOR-21 | 94-017 | LG 441 |
| TOR-336 | 94-018 | LG 565 |
| TOR-3393 | 94-039 | LG 561 |
| TOR-3394 | 91-181 | LG 495 |
| TOR-3405 | 94-022 | LG 565 |
| TOR-3502 | 94-069 | LG 441 |
| TOR-454 | 94-026 | LG 369 |
| TOR-5156 | 94-029 | LG 414 |
| TOR-5429 | 94-051 | LG 570 |
| TOR-6002 | 94-770 | LG 569 |
| TOR-6100 | 94-127 | LG 569 |
| TOR-62 | 94-019 | LG 570 |
| TOR-6271 | 96-705 | LG 573 |
| TOR-72 | 94-011 | LG 572 |
| TU-136 | 71-101 | LG 956 |
| TU-1361 | 71-096 | LG 956 |
| TU-1366 | 71-250 | LG 956 |
| TU-1566 | 71-102 | LG 956 |
| TU-1668 | 71-816 | LG 956 |
| TU-1888 | 71-104 | LG 956 |
| TU-1892 | 71-099 | LG 956 |
| TU-1893 | 71-406 | LG 956 |
| TU-1897 | 71-418 | LG 957 |
| TU-2300 | 71-100 | LG 956 |
| TU-2385 | 71-105 | LG 957 |
| TU2804 | 71-109 | LG 956 |
| TU-2804J | 71-274 | LG 956 |
| TU-408 | 71-103 | LG 956 |
| TU-4104 | 71-400 | LG 956 |
| TU-4105 | 71-500 | |
| TU-4106 | 71-600 | LG 956 |
| TU-4107 | 71-407 | LG 956 |
| TU4109 | 71-276 | LG 956 |
| TU-4110 | 71-278 | |
| TU-480 | 71-800 | LG 956 |
| WA-344 | 91-912 | LG 576 |
| WA-3469 | 91-919 | LG 576 |
| WA-346RH | 91-913 | LG 576 |
| WA-3470 | 91-920 | LG 576 |
| WA-34RH | 91-911 | LG 576 |
| WB-170 | 45-014 | LG 225 |
| WB-698 | 45-010 | LG 238 |
| WK-862 | 02-535 | |

## LANDSCAPE SUPPLY

| PART No. | OREGON | Page |
|---|---|---|
| 1205001 | 83-284 | LG 818 |
| 150505 | 75-571 | LG 335 |
| 150515 | 75-165 | LG 322 |
| 156290 | 91-311 | LG 439 |
| 156291 | 91-335 | LG 420 |
| 211512 | 09-802 | LG 233 |
| 212003 | 06-003 | LG 805 |
| 212004 | 06-004 | LG 805 |
| 212006N | 82-306 | LG 874 |
| 2120101A | 34-023 | LG 822 |
| 2120102AA | 34-007 | LG 826 |
| 212018N | 78-641 | LG 835 |
| 212019 | 78-649 | LG 841 |
| 212022 | 78-643 | LG 835 |
| 212104 | 45-104 | LG 939 |
| 2121246 | 78-646 | LG 841 |
| 212129 | 48-200 | LG 694 |
| 21214B | 45-078 | LG 230 |
| 212166 | 78-111 | LG 826 |
| 212184 | 78-020 | LG 825 |
| 212214 | 78-651 | LG 835 |
| 212622 | 78-644 | LG 835 |
| 212786 | 78-041 | LG 823 |
| 212806 | 82-308 | LG 874 |
| 214095 | 78-640 | LG 835 |
| 214194 | 45-030 | LG 245 |
| 214798 | 43-075 | |
| 217001 | 71-400 | LG 956 |
| 217006 | 71-109 | LG 956 |
| 217019 | 71-500 | |
| 217027 | 71-511 | LG 956 |

## LANDSCAPE SUPPLY

| PART No. | OREGON | Page |
|---|---|---|
| 217035 | 71-600 | LG 956 |
| 217043 | 71-101 | LG 956 |
| 217047 | 71-250 | LG 956 |
| 217050 | 71-102 | LG 956 |
| 217068 | 71-800 | LG 956 |
| 217076 | 71-816 | LG 956 |
| 217084 | 71-104 | LG 956 |
| 217092 | 71-098 | LG 956 |
| 217100 | 71-100 | LG 956 |
| 21711 | 71-105 | LG 957 |
| 217126 | 71-408 | LG 957 |
| 2205203 | 75-429 | LG 334 |
| 220620 | 72-745 | LG 1033 |
| 22113 | 93-025 | LG 482 |
| 22118A | 94-022 | LG 565 |
| 2212 | 93-005 | LG 447 |
| 2213 | 91-181 | LG 495 |
| 2215 | 91-183 | LG 370 |
| 2216 | 91-184 | LG 421 |
| 2218 | 93-008 | LG 510 |
| 2219 | 93-009 | LG 476 |
| 22316 | 91-502 | LG 477 |
| 2233 | 91-506 | LG 473 |
| 2235 | 91-505 | LG 477 |
| 224177 | 75-101 | LG 269 |
| 2262 | 91-242 | LG 371 |
| 2264 | 91-244 | LG 450 |
| 2299 | 91-627 | LG 482 |
| 231002 | 93-006 | LG 444 |
| 231003 | 99-126 | LG 501 |
| 231007 | 91-503 | LG 424 |
| 231013 | 91-389 | LG 538 |
| 231023 | 94-018 | LG 565 |
| 231024 | 94-029 | LG 414 |
| 231025 | 94-019 | LG 570 |
| 231029 | 94-011 | LG 572 |
| 231921 | 94-026 | LG 369 |
| 232202 | 75-579 | LG 335 |
| 232222 | 75-566 | LG 334 |
| 235361 | 75-589 | LG 335 |
| 240302 | 75-532 | LG 334 |
| 261017 | 75-221 | LG 280 |
| 261019 | 75-338 | LG 334 |
| 261076 | 75-582 | LG 254 |
| 261111 | 75-072 | LG 268 |
| 261204 | 48-148 | LG 695 |
| 261212 | 75-212 | LG 268 |
| 261389 | 75-128 | LG 253 |
| 261440 | 75-180 | LG 254 |
| 261442 | 75-130 | LG 269 |
| 261458 | 75-131 | LG 269 |
| 263045 | 75-114 | LG 281 |
| 2631443 | 75-446 | LG 334 |
| 263213 | 75-437 | LG 334 |
| 263289 | 75-489 | LG 335 |
| 263318 | 75-487 | LG 335 |
| 26332 | 75-435 | LG 334 |
| 263346 | 75-547 | LG 334 |
| 263511 | 75-222 | LG 252 |
| 263543 | 75-443 | LG 334 |
| 263619 | 75-535 | LG 334 |
| 263643 | 75-223 | LG 269 |
| 263661 | 75-558 | LG 253 |
| 263861 | 75-546 | LG 334 |
| 263945 | 75-491 | LG 335 |
| 264023 | 75-240 | LG 297 |
| 264030 | 75-586 | LG 335 |
| 264143 | 75-036 | LG 297 |
| 264173 | 75-188 | LG 256 |
| 264205 | 75-552 | LG 334 |
| 264339 | 75-010 | LG 311 |
| 265030 | 75-585 | LG 335 |
| 267141 | 75-441 | LG 334 |
| 267914 | 75-144 | LG 284 |
| 268070 | 75-572 | LG 335 |
| 268071 | 75-573 | LG 335 |
| 286421 | 75-464 | LG 334 |
| 286423 | 75-533 | LG 334 |
| 290488 | 75-593 | LG 335 |
| 290763 | 75-440 | LG 334 |
| 290778 | 75-323 | LG 334 |
| 292001 | 82-305 | LG 908 |
| 292037 | 09-804 | LG 233 |
| 292083 | 75-113 | LG 281 |
| 292087 | 75-154 | LG 312 |
| 292088 | 75-155 | LG 312 |
| 292089 | 75-031 | LG 278 |
| 292100 | 48-320 | LG 238 |
| 292102 | 45-257 | LG 245 |
| 292110 | 48-202 | LG 694 |
| 292181 | 78-121 | LG 827 |
| 292202 | 75-260 | LG 312 |
| 292203 | 75-043 | LG 312 |
| 292204 | 75-054 | LG 312 |
| 292265 | 75-047 | LG 313 |
| 292285 | 75-048 | LG 313 |
| 292286 | 75-058 | LG 255 |
| 292472 | 75-444 | LG 334 |
| 292587 | 75-052 | LG 313 |
| 292668 | 45-002 | LG 237 |
| 29312 | 91-256 | LG 437 |
| 2936 | 91-393 | LG 485 |
| 293670 | 75-439 | LG 334 |
| 293671 | 75-543 | LG 334 |
| 293672 | 75-561 | LG 334 |
| 293673 | 75-563 | LG 253 |
| 293674 | 75-420 | LG 334 |
| 293675 | 75-421 | LG 334 |
| 2937 | 91-394 | LG 489 |
| 2938 | 91-395 | LG 493 |
| 510040 | 30-080 | LG 205 |
| 510081 | 30-026 | LG 208 |
| 510084 | 30-088 | LG 203 |
| 510085 | 30-085 | LG 203 |
| 510093 | 30-093 | LG 206 |
| 510122 | 55-122 | LG 770 |
| 5102110 | 30-311 | LG 199 |
| 5102120 | 30-303 | LG 198 |
| 510303 | 30-095 | LG 206 |
| 5105403 | 30-111 | LG 217 |
| 5108301 | 30-098 | LG 206 |
| 510843 | 30-421 | LG 220 |
| 514290 | 75-205 | LG 322 |
| 514326 | 31-140 | LG 937 |
| 514334 | 31-150 | LG 937 |
| 514367 | 31-160 | LG 937 |
| 542750 | 75-570 | LG 335 |
| 91194 | 91-368 | LG 460 |
| 91217 | 91-217 | LG 558 |
| 91255 | 91-255 | LG 454 |
| 91265 | 91-265 | LG 431 |
| 91266 | 91-266 | LG 431 |
| 91362 | 75-436 | LG 334 |
| 91380 | 91-380 | LG 538 |
| 91381 | 91-381 | LG 483 |
| 91383 | 91-383 | LG 484 |
| 91435 | 91-435 | LG 498 |
| 91436 | 91-438 | LG 500 |
| 91622 | 91-622 | LG 536 |
| 91917 | 91-917 | LG 576 |
| 91918 | 91-919 | LG 576 |
| 94039 | 94-039 | LG 561 |

## LASER

| PART No. | OREGON | Page |
|---|---|---|
| 22003 | 71-099 | LG 956 |
| 22004 | 71-409 | LG 956 |
| 22005 | 71-098 | LG 956 |
| 22006 | 71-097 | LG 956 |
| 22008 | 71-100 | LG 956 |
| 22009 | 71-412 | LG 956 |
| 22085 | 71-410 | LG 956 |
| 40211 | 30-145 | LG 184 |
| 42055 | 90-142 | LG 368 |
| 42056 | 90-143 | LG 368 |
| 42057 | 90-144 | LG 368 |
| 42058 | 90-145 | LG 368 |
| 42059 | 90-146 | LG 368 |
| 43010 | 55-613 | LG 211 |
| 43011 | 55-211 | LG 191 |
| 43016 | 30-205 | LG 219 |
| 43016 | 55-214 | LG 209 |
| 43026 | 55-612 | LG 211 |
| 43030 | 55-241 | LG 214 |
| 43031 | 55-240 | LG 214 |
| 43032 | 55-242 | LG 214 |
| 43036 | 55-610 | LG 191 |
| 43038 | 55-610 | LG 191 |
| 43052 | 55-613 | LG 211 |
| 43055 | 55-515 | LG 211 |
| 43068 | 30-416 | LG 214 |
| 43070 | 55-248 | LG 215 |
| 43075 | 55-263 | LG 214 |
| 43078 | 55-212 | LG 209 |
| 43079 | 55-218 | LG 209 |
| 43084 | 55-262 | LG 215 |
| 43087 | 55-226 | LG 212 |
| 43091 | 55-244 | LG 215 |
| 43108 | 55-246 | LG 214 |
| 43111 | 55-243 | LG 215 |
| 43112 | 55-249 | LG 215 |
| 43113 | 55-245 | LG 215 |
| 43118 | 30-153 | LG 216 |
| 43707 | 30-719 | LG 212 |
| 43997 | 30-149 | LG 211 |
| 44005 | 43-540 | LG 936 |
| 44016 | 43-699 | LG 936 |
| 44163 | 42-452 | LG 867 |
| 44217 | 43-562 | LG 936 |
| 44976 | 56-008 | LG 687 |
| 44977 | 56-011 | LG 687 |
| 44980 | 49-835 | LG 611 |
| 44982 | 49-897 | LG 617 |
| 44983 | 49-859 | LG 616 |
| 47002 | 70-301 | LG 959 |
| 47031 | 31-004 | LG 929 |
| 47043 | 57-010 | LG 677 |
| 47045 | 57-005 | LG 677 |
| 47046 | 57-002 | LG 677 |
| 47047 | 57-006 | LG 677 |
| 47050 | 57-001 | LG 677 |
| 47052 | 57-008 | LG 677 |
| 47053 | 57-005 | LG 677 |
| 47054 | 57-005 | LG 677 |
| 48015 | 49-020 | LG 631 |
| 48026 | 49-818-0 | LG 615 |
| 48026 | 49-885-0 | LG 619 |
| 48027 | 49-819-0 | LG 615 |
| 48027 | 49-861 | LG 615 |
| 48028 | 49-836-0 | LG 616 |
| 48030 | 49-801 | LG 610 |
| 48031 | 49-803 | LG 610 |
| 48033 | 49-805 | LG 609 |
| 48036 | 49-885-0 | LG 619 |
| 48045 | 49-848 | LG 613 |
| 48046 | 49-845 | LG 611 |
| 48048 | 49-809 | LG 613 |
| 48048 | 49-873 | LG 612 |
| 48049 | 49-809 | LG 613 |
| 48050 | 49-806 | LG 611 |
| 48050 | 49-832 | LG 611 |
| 48052 | 49-806 | LG 611 |
| 48053 | 49-814 | LG 614 |
| 48054 | 49-872 | LG 612 |
| 48056 | 49-812 | LG 612 |
| 48060 | 49-837-0 | LG 615 |
| 48061 | 49-800 | LG 610 |
| 48062 | 49-875 | LG 612 |
| 48063 | 49-816 | LG 612 |
| 48066 | 49-833 | LG 611 |
| 48067 | 49-834 | LG 611 |
| 48069 | 49-834 | LG 611 |
| 48070 | 49-825 | LG 606 |
| 48071 | 49-831 | LG 612 |
| 48072 | 49-887-0 | LG 616 |
| 48073 | 49-822-0 | LG 616 |
| 48074 | 49-863 | LG 616 |
| 48076 | 49-817-0 | LG 616 |
| 48077 | 49-866 | LG 617 |
| 48078 | 49-867 | LG 618 |
| 48079 | 49-898 | LG 618 |
| 48139 | 55-187 | LG 631 |
| 48140 | 55-188 | LG 631 |
| 48141 | 55-189 | LG 631 |
| 48143 | 49-026 | LG 769 |
| 48144 | 49-027 | LG 769 |
| 48145 | 49-020 | LG 631 |
| 48150 | 49-854 | LG 615 |
| 48151 | 49-893 | LG 617 |
| 48152 | 49-857 | LG 619 |
| 48153 | 49-883 | LG 618 |
| 48154 | 49-884 | LG 619 |
| 48157 | 49-028 | LG 769 |
| 48158 | 49-835 | LG 611 |

# 2019 Aftermarket X-Reference

## LASER

| PART No. | OREGON | Page |
|---|---|---|
| 48158 | 49-847 | LG 610 |
| 48179 | 49-868 | LG 602 |
| 48185 | 49-897 | LG 617 |
| 48186 | 49-899 | LG 617 |
| 48187 | 49-902 | LG 614 |
| 48201 | 55-340 | LG 627 |
| 48202 | 55-342 | LG 627 |
| 48203 | 55-343 | LG 627 |
| 56003 | 67-009 | LG 965 |
| 56027 | 67-005 | LG 965 |
| 56029 | 67-018 | LG 965 |
| 56034 | 67-017 | LG 965 |
| 56038 | 67-002 | LG 965 |
| 56046 | 67-011 | LG 965 |
| 56050 | 67-019 | LG 965 |
| 56070 | 67-010 | LG 965 |
| 56071 | 67-015 | LG 965 |
| 56072 | 67-012 | LG 965 |
| 56073 | 67-020 | LG 965 |
| 56074 | 67-001 | LG 965 |
| 56075 | 67-013 | LG 965 |
| 56076 | 67-003 | LG 965 |
| 56078 | 67-007 | LG 965 |
| 56079 | 67-008 | LG 965 |
| 56080 | 67-004 | LG 965 |
| 56081 | 67-001 | LG 965 |
| 56082 | 67-014 | LG 965 |
| 57002 | 73-014 | LG 849 |
| 57003 | 73-003 | LG 847 |
| 57013 | 73-006 | LG 846 |
| 57019 | 73-023 | LG 847 |
| 57023 | 73-008 | LG 848 |
| 57026 | 73-017 | LG 848 |
| 57027 | 73-018 | LG 849 |
| 57028 | 73-019 | LG 849 |
| 57040 | 80-740 | LG 852 |
| 57041 | 80-742 | LG 852 |
| 57042 | 80-741 | LG 852 |
| 57043 | 80-743 | LG 852 |
| 57044 | 80-746 | LG 852 |
| 57047 | 73-028 | LG 850 |
| 57050 | 73-031 | LG 850 |
| 57069 | 80-749 | LG 853 |
| 57070 | 73-001 | LG 847 |
| 81009 | 55-460-1 | LG 1026 |
| 81015 | 41-925 | LG 1014 |
| 81016 | 41-924 | LG 1014 |
| 81019 | 41-922 | LG 1014 |
| 87030 | 55-255 | LG 1019 |
| 87040 | 55-816 | LG 988 |
| 87041 | 55-821 | LG 988 |
| 87047 | 55-109 | LG 773 |
| 87048 | 55-102 | LG 773 |
| 87096 | 43-532 | LG 936 |
| 87099 | 43-509 | LG 936 |
| 87106 | 43-685 | LG 936 |
| 87135 | 55-741 | LG 1019 |
| 90085 | 30-417 | LG 193 |
| 90109 | 30-406 | LG 193 |
| 90344 | 30-950 | LG 209 |
| 91007 | 91-183 | LG 370 |
| 91009 | 95-051 | LG 465 |
| 91012 | 198-049 | LG 518 |
| 91013 | 98-051 | LG 521 |
| 91017 | 98-005 | LG 521 |
| 91019 | 91-266 | LG 431 |
| 91021 | 91-911 | LG 576 |
| 91024 | 91-912 | LG 576 |
| 91025 | 91-913 | LG 576 |
| 91026 | 91-917 | LG 576 |
| 91027 | 91-918 | LG 576 |
| 91030 | 198-052 | LG 389 |
| 91031 | 198-058 | LG 517 |
| 91032 | 198-153 | LG 520 |
| 91033 | 198-059 | LG 403 |
| 91034 | 97-017 | LG 537 |
| 91040 | 93-008 | LG 510 |
| 91046 | 91-256 | LG 437 |
| 91050 | 91-180 | LG 460 |
| 91051 | 91-183 | LG 370 |
| 91052 | 91-620 | LG 470 |
| 91054 | 91-622 | LG 536 |
| 91055 | 91-623 | LG 485 |
| 91056 | 91-626 | LG 552 |
| 91058 | 90-309 | LG 492 |
| 91060 | 98-537 | LG 516 |
| 91062 | 91-181 | LG 495 |
| 91070 | 97-109 | LG 525 |
| 91073 | 93-006 | LG 444 |
| 91087 | 91-415 | LG 406 |
| 91093 | 91-327 | LG 404 |
| 91094 | 91-330 | LG 513 |
| 91097 | 95-006 | LG 397 |
| 91108 | 91-381 | LG 483 |
| 91109 | 91-380 | LG 538 |
| 91110 | 95-018 | LG 399 |
| 91114 | 99-121 | LG 551 |
| 91121 | 94-770 | LG 569 |
| 91124 | 98-044 | LG 409 |
| 91128 | 98-487 | LG 513 |
| 91133 | 98-056 | LG 512 |
| 91134 | 98-057 | LG 513 |
| 91137 | 99-107 | LG 551 |
| 91138 | 99-113 | LG 528 |
| 91142 | 95-027 | LG 398 |
| 91144 | 191-392 | LG 488 |
| 91146 | 98-486 | LG 512 |
| 91147 | 98-037 | LG 574 |
| 91148 | 91-394 | LG 489 |
| 91149 | 98-001 | LG 517 |
| 91151 | 98-499 | LG 519 |
| 91152 | 91-430 | LG 497 |
| 91154 | 98-002 | LG 401 |
| 91157 | 95-031 | LG 377 |
| 91158 | 91-096 | LG 389 |
| 91160 | 93-009 | LG 476 |
| 91162 | 93-011 | LG 557 |
| 91163 | 91-342 | LG 447 |
| 91168 | 91-761 | LG 578 |
| 91169 | 91-762 | LG 578 |
| 91170 | 91-764 | LG 579 |
| 91171 | 97-005 | LG 527 |
| 91173 | 97-123 | LG 537 |
| 91174 | 97-014 | LG 527 |
| 91175 | 97-001 | LG 527 |
| 91176 | 91-414 | LG 405 |
| 91177 | 95-034 | LG 377 |
| 91178 | 91-005 | LG 458 |
| 91179 | 95-036 | LG 463 |
| 91181 | 95-014 | LG 374 |
| 91191 | 91-097 | LG 388 |
| 91197 | 91-144 | LG 454 |
| 91198 | 91-093 | LG 389 |
| 91203 | 91-003 | LG 370 |
| 91208 | 95-015 | LG 400 |
| 91228 | 91-398 | LG 488 |
| 91230 | 95-011 | |
| 91231 | 99-117 | LG 556 |
| 91233 | 96-005 | |
| 91235 | 91-713 | LG 422 |
| 91239 | 91-714 | LG 543 |
| 91246 | 91-805 | LG 560 |
| 91247 | 91-806 | LG 447 |
| 91250 | 95-024 | LG 465 |
| 91252 | 95-023 | LG 380 |
| 91255 | 95-014 | LG 374 |
| 91259 | 90-618 | LG 368 |
| 91260 | 90-619 | LG 368 |
| 91262 | 91-393 | LG 485 |
| 91264 | 91-395 | LG 493 |
| 91268 | 97-119 | LG 525 |
| 91269 | 191-015 | LG 372 |
| 91277 | 93-010 | LG 432 |
| 91278 | 93-013 | LG 480 |
| 91280 | 40-402 | LG 589 |
| 91288 | 40-316 | LG 586 |
| 91294 | 94-040 | LG 573 |
| 91296 | 40-840 | LG 588 |
| 91299 | 94-017 | LG 441 |
| 91300 | 90-620 | LG 368 |
| 91302 | 90-621 | LG 368 |
| 91304 | 90-622 | LG 368 |
| 91305 | 40-141 | LG 585 |
| 91309 | 97-105 | LG 523 |
| 91316 | 97-107 | LG 524 |
| 91317 | 91-242 | LG 371 |
| 91323 | 91-352 | LG 482 |
| 91328 | 98-019 | LG 516 |
| 91331 | 195-032 | LG 425 |
| 91333 | 91-383 | LG 484 |
| 91334 | 91-436 | LG 498 |
| 91335 | 91-438 | LG 500 |
| 91338 | 91-403 | LG 488 |
| 91339 | 195-003 | LG 400 |
| 91340 | 195-005 | LG 373 |
| 91345 | 94-032 | LG 568 |
| 91348 | 195-033 | LG 400 |
| 91350 | 91-715 | LG 541 |
| 91353 | 91-389 | LG 538 |
| 91356 | 91-804 | LG 560 |
| 91361 | 97-105 | LG 523 |
| 91381 | 97-003 | |
| 91382 | 97-004 | |
| 91384 | 91-444 | LG 457 |
| 91386 | 92-011 | LG 490 |
| 91392 | 40-411 | LG 589 |
| 91393 | 40-403 | LG 589 |
| 91395 | 40-807 | LG 585 |
| 91400 | 40-140 | LG 584 |
| 91407 | 90-142 | LG 368 |
| 91408 | 90-143 | LG 368 |
| 91409 | 90-144 | LG 368 |
| 91410 | 90-145 | LG 368 |
| 91411 | 90-146 | LG 368 |
| 91428 | 98-007 | LG 401 |
| 91431 | 99-112 | LG 556 |
| 91434 | 91-364 | LG 481 |
| 91440 | 91-363 | LG 481 |
| 91462 | 90-309 | LG 492 |
| 91466 | 98-670 | LG 512 |
| 91468 | 98-634 | LG 405 |
| 91485 | 195-021 | LG 468 |
| 91487 | 95-607 | LG 397 |
| 91489 | 95-609 | LG 376 |
| 91492 | 95-601 | LG 423 |
| 91513 | 90-651 | LG 457 |
| 91514 | 98-600 | LG 85 |
| 91519 | 597-602 | LG 524 |
| 91520 | 97-604 | LG 525 |
| 91521 | 97-601 | LG 527 |
| 91533 | 96-630 | LG 556 |
| 91544 | 96-600 | LG 569 |
| 91548 | 94-026 | LG 369 |
| 91552 | 91-516 | LG 457 |
| 91553 | 91-516 | LG 457 |
| 91553 | 91-920 | LG 576 |
| 91554 | 91-517 | LG 457 |
| 91569 | 91-394 | LG 489 |
| 91571 | 91-398 | LG 488 |
| 91573 | 98-068 | LG 389 |
| 91575 | 95-614 | LG 375 |
| 91576 | 95-613 | LG 463 |
| 91591 | 90-644 | LG 561 |
| 91593 | 91-333 | LG 406 |
| 91594 | 91-594 | LG 534 |
| 91595 | 91-440 | LG 408 |
| 91597 | 91-329 | LG 409 |
| 91598 | 91-332 | LG 412 |
| 91599 | 91-501 | LG 413 |
| 91600 | 91-502 | LG 477 |
| 91601 | 91-253 | LG 415 |
| 91602 | 91-500 | LG 416 |
| 91605 | 91-384 | LG 487 |
| 91606 | 91-391 | LG 489 |
| 91609 | 91-399 | LG 493 |
| 91611 | 98-056 | LG 512 |
| 91614 | 198-063 | LG 513 |
| 91615 | 98-064-1 | LG 514 |
| 91623 | 97-010 | LG 524 |
| 91625 | 97-014 | LG 527 |
| 91630 | 94-019 | LG 570 |
| 91635 | 91-762 | LG 578 |
| 91637 | 91-766 | LG 579 |
| 91638 | 40-141 | LG 585 |
| 91646 | 40-408 | LG 589 |
| 91647 | 40-514 | LG 589 |
| 91649 | 40-518 | LG 589 |
| 91658 | 98-061 | LG 404 |
| 91659 | 98-066 | LG 409 |
| 91660 | 97-024 | LG 525 |
| 91662 | 97-018 | LG 523 |
| 91664 | 40-130 | LG 586 |
| 91665 | 40-411 | LG 589 |
| 91666 | 40-121 | LG 584 |

X

## LASER

| PART No. | OREGON | Page |
|---|---|---|
| 91667 | 40-951 | LG 587 |
| 91668 | 91-078 | LG 490 |
| 91669 | 95-045 | LG 374 |
| 91670 | 95-052 | LG 398 |
| 91671 | 91-395 | LG 493 |
| 91672 | 91-398 | LG 488 |
| 91682 | 195-062 | LG 376 |
| 91683 | 195-067 | LG 380 |
| 91684 | 95-041 | LG 401 |
| 91687 | 94-018 | LG 565 |
| 91688 | 94-019 | LG 570 |
| 91689 | 94-026 | LG 369 |
| 91690 | 94-038 | LG 568 |
| 91691 | 91-620 | LG 470 |
| 91694 | 91-448 | LG 482 |
| 91695 | 91-449 | LG 492 |
| 91698 | 91-447 | LG 538 |
| 91699 | 191-139 | LG 491 |
| 91700 | 191-108 | LG 484 |
| 91704 | 195-062 | LG 376 |
| 91706 | 95-057 | LG 380 |
| 91707 | 95-621 | LG 402 |
| 91715 | 91-333 | LG 406 |
| 91716 | 91-058 | LG 411 |
| 91717 | 91-144 | LG 454 |
| 91718 | 91-170 | LG 437 |
| 91719 | 91-373 | LG 383 |
| 91730 | 95-609 | LG 376 |
| 91732 | 95-613 | LG 463 |
| 91733 | 95-044 | LG 465 |
| 91736 | 191-108 | LG 484 |
| 91737 | 92-675 | LG 484 |
| 91738 | 90-348 | LG 484 |
| 91742 | 91-079 | LG 485 |
| 91743 | 90-354 | LG 488 |
| 91746 | 191-139 | LG 491 |
| 91747 | 92-119 | LG 492 |
| 91748 | 92-676 | LG 491 |
| 91750 | 90-309 | LG 492 |
| 91761 | 97-601 | LG 527 |
| 91763 | 91-557 | LG 545 |
| 91764 | 91-126 | LG 548 |
| 91766 | 91-502 | LG 477 |
| 91768 | 94-029 | LG 414 |
| 91771 | 94-051 | LG 570 |
| 91778 | 91-622 | LG 536 |
| 91779 | 91-626 | LG 552 |
| 91823 | 98-670 | LG 512 |
| 91824 | 98-637 | LG 512 |
| 91853 | 92-104 | LG 485 |
| 91854 | 92-103 | LG 487 |
| 91873 | 392-203 | LG 442 |
| 91874 | 96-749 | LG 433 |
| 91875 | 91-457 | LG 502 |
| 91876 | 91-456 | LG 502 |
| 92001 | 72-427 | LG 1029 |
| 92003 | 72-430 | LG 1034 |
| 92005 | 72-437 | LG 1030 |
| 92009 | 72-437 | LG 1030 |
| 92010 | 72-106 | LG 1029 |
| 92012 | 72-107 | LG 1029 |
| 92013 | 72-108 | LG 1031 |
| 92014 | 72-108 | LG 1031 |
| 92018 | 72-410 | LG 1030 |
| 92020 | 72-449 | LG 1030 |
| 92028 | 66-208 | LG 962 |
| 92034 | 71-400 | LG 956 |
| 92035 | 71-500 | |
| 92036 | 71-600 | LG 956 |
| 92037 | 71-405 | LG 956 |
| 92038 | 71-800 | LG 956 |
| 92039 | 71-816 | LG 956 |
| 92041 | 71-101 | LG 956 |
| 92042 | 72-729 | LG 1044 |
| 92046 | 72-508 | LG 1034 |
| 92049 | 72-436 | LG 1034 |
| 92052 | 72-306 | LG 1038 |
| 92053 | 72-307 | LG 1038 |
| 92055 | 72-318 | LG 1042 |
| 92058 | 72-322 | LG 1041 |
| 92059 | 72-323 | LG 1041 |
| 92218 | 70-371 | LG 961 |
| 92228 | 71-511 | LG 956 |
| 92229 | 71-104 | LG 956 |
| 92230 | 71-105 | LG 957 |
| 92230 | 71-106 | LG 957 |
| 92231 | 71-407 | LG 956 |
| 92233 | 71-096 | LG 956 |
| 92234 | 71-403 | LG 956 |
| 92235 | 71-102 | LG 956 |
| 92292 | 72-420 | LG 1047 |
| 92324 | 71-109 | LG 956 |
| 92325 | 71-401 | LG 956 |
| 92326 | 71-408 | LG 957 |
| 92327 | 72-500 | LG 1034 |
| 92329 | 72-094 | LG 1042 |
| 92330 | 72-311-1 | LG 1039 |
| 92345 | 71-003 | LG 956 |
| 92348 | 58-064 | LG 959 |
| 92350 | 58-072 | LG 959 |
| 92351 | 68-204 | LG 962 |
| 92352 | 58-077 | LG 959 |
| 92353 | 58-077 | LG 959 |
| 92354 | 66-209 | LG 962 |
| 92355 | 68-211 | LG 962 |
| 92363 | 58-075 | LG 959 |
| 92370 | 72-001 | LG 1031 |
| 92371 | 72-458 | LG 1031 |
| 92372 | 72-003 | LG 1031 |
| 92390 | 72-131 | LG 1041 |
| 93009 | 30-957 | LG 209 |
| 93010 | 30-112 | LG 218 |
| 93011 | 30-404 | LG 192 |
| 93013 | 30-959 | LG 219 |
| 93014 | 30-421 | LG 220 |
| 93016 | 30-205 | LG 219 |
| 93017 | 30-906 | LG 185 |
| 93019 | 30-909 | LG 186 |
| 93021 | 30-908 | LG 185 |
| 93023 | 30-909 | LG 186 |
| 93029 | 30-927 | LG 187 |
| 93030 | 30-731 | LG 180 |
| 93034 | 30-949 | LG 209 |
| 93036 | 30-960 | LG 187 |
| 93040 | 30-910 | LG 186 |
| 93043 | 30-920 | LG 186 |
| 93044 | 30-950 | LG 209 |
| 93046 | 30-903 | LG 186 |
| 93048 | 30-736 | LG 185 |
| 93049 | 30-923 | LG 186 |
| 93050 | 30-132 | LG 179 |
| 93051 | 30-941 | LG 219 |
| 93054 | 30-108 | LG 180 |
| 93055 | 30-735 | LG 181 |
| 93058 | 30-410 | LG 220 |
| 93059 | 30-946 | LG 207 |
| 93060 | 30-125 | LG 206 |
| 93061 | 30-401 | LG 193 |
| 93062 | 30-317 | LG 194 |
| 93065 | 30-105 | LG 179 |
| 93066 | 30-318 | LG 193 |
| 93067 | 30-700 | LG 180 |
| 93068 | 30-700 | LG 180 |
| 93069 | 30-301 | LG 217 |
| 93074 | 30-720 | LG 180 |
| 93075 | 30-720 | LG 180 |
| 93076 | 30-304 | LG 199 |
| 93077 | 30-711 | LG 218 |
| 93078 | 30-106 | LG 179 |
| 93079 | 30-710 | LG 181 |
| 93080 | 30-710 | LG 181 |
| 93081 | 30-758 | LG 209 |
| 93084 | 30-954 | LG 220 |
| 93085 | 30-417 | LG 193 |
| 93086 | 30-400 | LG 193 |
| 93087 | 30-403 | LG 192 |
| 93092 | 83-300 | LG 819 |
| 93095 | 30-134 | LG 180 |
| 93096 | 30-107 | LG 180 |
| 93097 | 83-013 | LG 817 |
| 93098 | 83-283 | LG 818 |
| 93099 | 83-301 | LG 816 |
| 93100 | 83-282 | LG 817 |
| 93104 | 30-925 | LG 187 |
| 93105 | 30-929 | LG 187 |
| 93106 | 30-917 | LG 186 |
| 93107 | 30-405 | LG 193 |
| 93109 | 30-406 | LG 193 |
| 93114 | 30-933 | LG 195 |
| 93115 | 30-937 | LG 202 |
| 93116 | 30-951 | LG 219 |
| 93118 | 30-117 | LG 219 |
| 93121 | 83-282 | LG 817 |
| 93122 | 83-282 | LG 817 |
| 93123 | 83-013 | LG 817 |
| 93129 | 30-762 | LG 183 |
| 93131 | 30-413 | LG 221 |
| 93132 | 30-412 | LG 220 |
| 93133 | 30-414 | LG 221 |
| 93142 | 30-928 | |
| 93144 | 30-709 | LG 194 |
| 93146 | 30-305 | LG 198 |
| 93147 | 30-309 | LG 199 |
| 93149 | 30-111 | LG 217 |
| 93153 | 30-740 | LG 218 |
| 93156 | 30-423 | LG 221 |
| 93160 | 30-303 | LG 198 |
| 93162 | 30-415 | |
| 93163 | 55-201 | LG 190 |
| 93171 | 30-403 | LG 192 |
| 93172 | 30-410 | LG 220 |
| 93180 | 30-430 | LG 211 |
| 93191 | 30-322 | LG 200 |
| 93193 | 30-432 | |
| 93204 | 30-311 | LG 199 |
| 93214 | 69-395 | LG 206 |
| 93265 | 30-761 | LG 183 |
| 93267 | 30-347 | LG 194 |
| 93276 | 83-285 | LG 814 |
| 93278 | 83-013 | LG 817 |
| 93279 | 30-940 | LG 202 |
| 93280 | 30-311 | LG 199 |
| 93280 | 30-938 | LG 202 |
| 93281 | 30-942 | LG 206 |
| 93286 | 30-916 | LG 185 |
| 93287 | 30-119 | LG 191 |
| 93288 | 30-437 | LG 192 |
| 93289 | 30-703 | LG 192 |
| 93290 | 30-436 | LG 194 |
| 93292 | 30-347 | LG 194 |
| 93294 | 30-321 | LG 199 |
| 93295 | 30-327 | LG 199 |
| 93297 | 30-706 | LG 201 |
| 93298 | 30-706 | LG 201 |
| 93299 | 55-515 | LG 211 |
| 93301 | 30-932 | LG 196 |
| 93302 | 30-936 | LG 202 |
| 93303 | 30-939 | LG 202 |
| 93305 | 30-527 | LG 202 |
| 93306 | 30-921 | LG 202 |
| 93307 | 30-441 | LG 202 |
| 93311 | 30-121 | LG 190 |
| 93312 | 30-705 | LG 200 |
| 93315 | 30-919 | LG 188 |
| 93330 | 30-139 | LG 183 |
| 93331 | 30-145 | LG 184 |
| 93332 | 30-914 | LG 187 |
| 93334 | 30-437 | LG 192 |
| 93335 | 30-345 | LG 195 |
| 93336 | 30-346 | LG 195 |
| 93337 | 30-963 | LG 195 |
| 93338 | 30-124 | LG 197 |
| 93339 | 30-123 | LG 183 |
| 93340 | 83-011 | LG 819 |
| 93341 | 83-010 | LG 819 |
| 93342 | 83-012 | LG 819 |
| 93343 | 83-000 | LG 815 |
| 94003 | 60-400 | LG 700 |
| 94004 | 60-353 | LG 719 |
| 94006 | 60-409 | LG 700 |
| 94010 | 60-209 | LG 700 |
| 94012 | 60-860 | LG 701 |
| 94014 | 60-408 | LG 700 |
| 94023 | 35-001 | LG 806 |
| 94023 | 35-007 | LG 806 |
| 94024 | 35-001 | LG 806 |
| 94026 | 35-023 | LG 806 |
| 94031 | 35-005 | LG 806 |
| 94032 | 35-005 | LG 806 |
| 94033 | 35-004 | LG 806 |
| 94034 | 35-004 | LG 806 |
| 94035 | 35-003 | LG 809 |
| 94036 | 35-003 | LG 809 |
| 94037 | 35-008 | LG 808 |

# 2019 Aftermarket X-Reference

## LASER

| PART No. | OREGON | Page |
|---|---|---|
| 94038 | 35-006 | LG 808 |
| 94039 | 35-006 | LG 808 |
| 94039 | 35-010 | LG 809 |
| 94039 | 35-026 | LG 807 |
| 94045 | 35-002 | LG 806 |
| 94045 | 35-023 | LG 806 |
| 94046 | 35-032 | LG 809 |
| 94048 | 35-014 | LG 806 |
| 94052 | 35-016 | LG 809 |
| 94053 | 35-016 | LG 809 |
| 94056 | 35-021 | LG 810 |
| 94062 | 35-023 | LG 806 |
| 94063 | 35-023 | LG 806 |
| 94064 | 35-005 | LG 806 |
| 94066 | 35-001 | LG 806 |
| 94066 | 35-007 | LG 806 |
| 94070 | 35-026 | LG 807 |
| 94071 | 35-004 | LG 806 |
| 94075 | 35-022 | LG 807 |
| 94076 | 35-027 | LG 807 |
| 94093 | 49-041-0 | LG 749 |
| 94094 | 49-040-0 | LG 749 |
| 94095 | 49-045 | LG 749 |
| 94096 | 49-045 | LG 749 |
| 94102 | 49-047 | LG 749 |
| 94110 | 49-208 | LG 756 |
| 94111 | 49-207 | LG 756 |
| 94112 | 49-194 | LG 755 |
| 94114 | 49-069 | LG 746 |
| 94116 | 50-101 | LG 746 |
| 94120 | 50-204 | LG 758 |
| 94122 | 50-206 | LG 758 |
| 94133 | 36-001 | |
| 94148 | 50-411 | LG 745 |
| 94152 | 50-407 | LG 758 |
| 94155 | 50-543 | LG 748 |
| 94156 | 50-544 | LG 747 |
| 94157 | 50-542 | LG 747 |
| 94158 | 50-025-0 | LG 747 |
| 94159 | 50-027 | LG 747 |
| 94161 | 50-541 | LG 747 |
| 94163 | 49-412 | LG 745 |
| 94166 | 50-032 | LG 759 |
| 94168 | 50-033 | LG 759 |
| 94169 | 50-415 | LG 751 |
| 94172 | 50-417 | LG 751 |
| 94173 | 49-016 | LG 759 |
| 94175 | 49-355 | LG 746 |
| 94176 | 50-418 | LG 751 |
| 94177 | 50-416 | LG 751 |
| 94178 | 49-153 | LG 758 |
| 94180 | 50-502 | LG 756 |
| 94184 | 49-099 | LG 748 |
| 94187 | 50-302 | LG 758 |
| 94207 | 36-005 | LG 750 |
| 94208 | 36-022 | LG 750 |
| 94212 | 36-044 | LG 754 |
| 94213 | 36-042 | LG 754 |
| 94215 | 36-101 | LG 750 |
| 94216 | 36-100 | LG 750 |
| 94219 | 36-103 | LG 750 |
| 94249 | 36-102 | LG 750 |
| 94254 | 36-140 | LG 755 |
| 94255 | 36-141 | LG 755 |
| 94256 | 36-142 | LG 755 |
| 94257 | 36-143 | LG 755 |
| 94258 | 36-104 | LG 750 |
| 94259 | 36-244 | LG 754 |
| 94260 | 36-245 | LG 754 |
| 94261 | 36-243 | LG 754 |
| 94262 | 49-411 | LG 759 |
| 94264 | 49-150 | LG 758 |
| 94267 | 36-523 | LG 755 |
| 94268 | 36-325 | LG 755 |
| 94271 | 36-521 | LG 755 |
| 94277 | 36-522 | LG 755 |
| 94279 | 36-326 | LG 755 |
| 94283 | 50-041 | LG 757 |
| 94288 | 50-553 | LG 752 |
| 94290 | 50-554 | LG 753 |
| 94293 | 49-107 | LG 749 |
| 94294 | 49-100 | LG 749 |
| 94295 | 49-112 | LG 749 |
| 94296 | 50-556 | LG 753 |
| 94298 | 49-132 | LG 749 |
| 94299 | 49-120 | LG 759 |
| 94302 | 50-548 | LG 759 |
| 94310 | 49-115 | LG 746 |
| 94324 | 49-111 | LG 748 |
| 94327 | 49-131 | LG 745 |
| 94330 | 49-160 | LG 747 |
| 94332 | 49-119 | LG 746 |
| 94336 | 49-129 | LG 745 |
| 94339 | 49-123 | LG 746 |
| 94341 | 49-114 | LG 746 |
| 94343 | 50-546 | LG 748 |
| 94344 | 50-545 | LG 748 |
| 94347 | 49-095 | LG 746 |
| 94348 | 49-067 | LG 748 |
| 94349 | 49-067 | LG 748 |
| 94350 | 49-109 | LG 748 |
| 94352 | 49-110 | LG 746 |
| 94359 | 49-204 | LG 749 |
| 94360 | 35-012 | LG 806 |
| 94362 | 35-028 | LG 810 |
| 94363 | 35-015 | LG 810 |
| 94365 | 49-401 | LG 605 |
| 94366 | 60-160 | LG 701 |
| 94367 | 60-522 | LG 715 |
| 94368 | 60-008 | LG 703 |
| 94370 | 60-420 | LG 717 |
| 94371 | 60-427 | LG 717 |
| 94382 | 49-193 | LG 756 |
| 94384 | 49-207 | LG 756 |
| 94386 | 60-012-0 | LG 712 |
| 94389 | 46-319 | LG 712 |
| 94392 | 46-323 | LG 712 |
| 94393 | 46-321 | LG 707 |
| 94394 | 49-841 | LG 626 |
| 94396 | 35-038 | LG 808 |
| 94410 | 46-325 | LG 701 |
| 94411 | 60-000 | LG 702 |
| 94412 | 60-004 | LG 701 |
| 94413 | 60-003 | LG 710 |
| 94414 | 60-124 | LG 710 |
| 94415 | 60-002 | LG 710 |
| 94416 | 60-006 | LG 716 |
| 94417 | 35-034 | LG 807 |
| 94425 | 33-013 | LG 949 |
| 94432 | 36-246 | LG 754 |
| 94434 | 36-046 | LG 754 |
| 94435 | 36-143 | LG 755 |
| 94439 | 50-555 | LG 753 |
| 94442 | 50-412 | LG 745 |
| 94444 | 50-419 | LG 751 |
| 94451 | 71-109 | LG 956 |
| 94453 | 71-105 | LG 957 |
| 94454 | 71-283 | LG 957 |
| 94457 | 60-014 | LG 712 |
| 94464 | 50-428 | LG 752 |
| 94466 | 50-432 | LG 753 |
| 94467 | 50-431 | LG 753 |
| 94470 | 49-181 | LG 752 |
| 94471 | 49-182 | LG 752 |
| 94472 | 49-183 | LG 752 |
| 94473 | 50-420 | LG 751 |
| 94474 | 49-184 | LG 752 |
| 94475 | 49-184 | LG 752 |
| 94476 | 49-185 | LG 752 |
| 94477 | 49-186 | LG 751 |
| 94478 | 50-421 | LG 751 |
| 94479 | 49-187 | LG 752 |
| 94480 | 49-187 | LG 752 |
| 94482 | 49-189 | LG 752 |
| 94484 | 49-190 | LG 752 |
| 94485 | 49-191 | LG 752 |
| 94486 | 49-191 | LG 752 |
| 94488 | 49-192 | LG 752 |
| 94489 | 50-422 | LG 751 |
| 94491 | 49-143 | LG 752 |
| 94496 | 50-437 | LG 745 |
| 94500 | 50-428 | LG 752 |
| 94502 | 35-036 | LG 807 |
| 94508 | 35-044 | LG 808 |
| 94509 | 60-210 | LG 700 |
| 94510 | 60-059 | LG 706 |
| 94514 | 60-079 | LG 709 |
| 94518 | 46-320 | LG 707 |
| 94519 | 46-004 | LG 707 |
| 94520 | 60-025-0 | LG 716 |
| 94521 | 60-030-0 | LG 716 |
| 94522 | 60-032-0 | LG 716 |
| 94523 | 60-033-0 | LG 716 |
| 94524 | 46-315 | LG 717 |
| 94525 | 46-327 | LG 717 |
| 94526 | 46-328 | LG 717 |
| 94527 | 46-330 | LG 701 |
| 94527 | 50-441 | LG 748 |
| 94528 | 50-445 | LG 748 |
| 94529 | 50-448 | LG 748 |
| 94530 | 36-530 | LG 755 |
| 94531 | 36-531 | LG 755 |
| 94534 | 36-535 | LG 755 |
| 94537 | 35-041 | LG 808 |
| 94539 | 35-043 | LG 808 |
| 94540 | 35-045 | LG 808 |
| 94625 | 46-327 | LG 717 |
| 95010 | 45-257 | LG 245 |
| 95011 | 45-295 | LG 232 |
| 95012 | 45-112 | LG 241 |
| 95013 | 45-012 | LG 224 |
| 95015 | 45-000 | LG 237 |
| 95015 | 45-010 | LG 238 |
| 95033 | 45-087 | LG 243 |
| 95034 | 45-088 | LG 240 |
| 95037 | 45-091 | LG 249 |
| 95038 | 45-092 | LG 854 |
| 95040 | 45-094 | LG 249 |
| 95041 | 45-082 | LG 854 |
| 95042 | 45-095 | LG 855 |
| 95045 | 45-098 | LG 243 |
| 95046 | 45-079 | LG 249 |
| 95047 | 45-083 | LG 246 |
| 95051 | 45-100 | LG 239 |
| 95052 | 45-006 | LG 249 |
| 95053 | 45-007 | LG 853 |
| 95055 | 45-013 | LG 853 |
| 95056 | 45-035 | LG 226 |
| 95057 | 45-003 | LG 244 |
| 95057 | 45-098 | LG 243 |
| 95065 | 45-220 | LG 232 |
| 95070 | 45-082 | LG 854 |
| 95076 | 45-048 | LG 854 |
| 95080 | 45-205 | LG 228 |
| 95083 | 45-022 | LG 243 |
| 95090 | 43-100 | LG 932 |
| 95091 | 43-200 | LG 932 |
| 95092 | 55-811 | LG 933 |
| 95094 | 43-014 | LG 932 |
| 95097 | 34-035 | LG 821 |
| 95098 | 34-036 | LG 821 |
| 95099 | 34-038 | LG 821 |
| 95100 | 44-353 | LG 840 |
| 95101 | 34-002 | LG 821 |
| 95102 | 34-005 | LG 821 |
| 95103 | 34-006 | LG 821 |
| 95104 | 34-009 | LG 821 |
| 95105 | 34-017 | LG 821 |
| 95106 | 34-018 | LG 821 |
| 95107 | 34-035 | LG 821 |
| 95108 | 34-031 | LG 821 |
| 95109 | 34-037 | LG 821 |
| 95111 | 44-306 | LG 840 |
| 95114 | 44-312 | LG 840 |
| 95115 | 44-313 | LG 840 |
| 95117 | 44-319 | LG 840 |
| 95118 | 44-321 | LG 840 |
| 95119 | 44-322 | LG 840 |
| 95121 | 34-020 | LG 821 |
| 95122 | 34-019 | LG 821 |
| 95126 | 34-014 | LG 831 |
| 95127 | 78-121 | LG 827 |
| 95129 | 34-044 | LG 821 |
| 95130 | 44-301 | LG 840 |
| 95132 | 44-310 | LG 840 |
| 95137 | 34-820 | LG 833 |
| 95138 | 34-822 | LG 832 |
| 95139 | 44-370 | LG 834 |
| 95140 | 44-316 | LG 840 |
| 95141 | 44-318 | LG 840 |
| 95145 | 34-012 | LG 821 |
| 95146 | 34-015 | LG 821 |
| 95147 | 34-030 | LG 821 |
| 95148 | 34-034 | LG 821 |

X

## LASER

| PART No. | OREGON | Page |
|---|---|---|
| 95149 | 34-011 | LG 821 |
| 95150 | 44-100 | LG 837 |
| 95163 | 75-098 | LG 251 |
| 95165 | 75-433 | LG 334 |
| 95169 | 75-440 | LG 334 |
| 95176 | 75-936 | LG 290 |
| 95179 | 75-470 | LG 335 |
| 95181 | 75-108 | LG 289 |
| 95182 | 75-097 | LG 289 |
| 95184 | 75-099 | LG 262 |
| 95185 | 75-469 | LG 335 |
| 95187 | 75-365 | LG 862 |
| 95188 | 75-029 | LG 253 |
| 95199 | 75-281 | LG 301 |
| 95201 | 75-021 | LG 274 |
| 95204 | 75-119 | LG 302 |
| 95206 | 75-554 | LG 334 |
| 95208 | 75-029 | LG 253 |
| 95210 | 75-028 | LG 302 |
| 95211 | 75-145 | LG 300 |
| 95212 | 75-340 | LG 334 |
| 95214 | 75-038 | LG 307 |
| 95215 | 75-340 | LG 334 |
| 95216 | 75-065 | LG 307 |
| 95217 | 75-557 | LG 334 |
| 95220 | 75-061 | LG 307 |
| 95223 | 75-026 | LG 307 |
| 95224 | 75-045 | LG 307 |
| 95228 | 75-111 | LG 306 |
| 95231 | 75-136 | LG 309 |
| 952321 | 75-136 | LG 309 |
| 95235 | 75-168 | LG 310 |
| 95238 | 75-275 | LG 322 |
| 95241 | 75-466 | LG 334 |
| 95242 | 75-075 | LG 322 |
| 95243 | 75-910 | LG 331 |
| 95246 | 75-060 | LG 322 |
| 95247 | 75-066 | LG 251 |
| 95247 | 75-068 | LG 318 |
| 95248 | 75-073 | LG 319 |
| 95266 | 75-400 | LG 335 |
| 95267 | 75-421 | LG 334 |
| 95268 | 75-422 | LG 334 |
| 95269 | 75-423 | LG 334 |
| 95270 | 75-424 | LG 334 |
| 95271 | 75-425 | LG 334 |
| 95272 | 75-426 | LG 334 |
| 95273 | 75-427 | LG 334 |
| 95274 | 75-428 | LG 334 |
| 95275 | 75-429 | LG 334 |
| 95277 | 75-431 | LG 334 |
| 95278 | 75-432 | LG 334 |
| 95279 | 75-433 | LG 334 |
| 95280 | 75-434 | LG 334 |
| 95281 | 75-435 | LG 334 |
| 95282 | 75-436 | LG 334 |
| 95283 | 75-437 | LG 334 |
| 95284 | 75-438 | LG 334 |
| 95285 | 75-439 | LG 334 |
| 95286 | 75-440 | LG 334 |
| 95287 | 75-441 | LG 334 |
| 95288 | 75-442 | LG 334 |
| 95289 | 75-443 | LG 334 |
| 95290 | 75-444 | LG 334 |
| 95291 | 75-445 | LG 334 |
| 95292 | 75-446 | LG 334 |
| 95293 | 75-447 | LG 334 |
| 95294 | 75-448 | LG 334 |
| 95295 | 75-449 | LG 334 |
| 95296 | 75-450 | LG 334 |
| 95297 | 75-451 | LG 334 |
| 95298 | 75-452 | LG 334 |
| 95299 | 75-453 | LG 334 |
| 95300 | 75-454 | LG 334 |
| 95301 | 75-455 | LG 334 |
| 95302 | 75-456 | LG 334 |
| 95303 | 75-457 | LG 334 |
| 95304 | 75-458 | LG 334 |
| 95305 | 75-459 | LG 334 |
| 95306 | 75-460 | LG 334 |
| 95307 | 75-461 | LG 334 |
| 95308 | 75-462 | LG 334 |
| 95309 | 75-463 | LG 334 |
| 95310 | 75-464 | LG 334 |
| 95311 | 75-465 | LG 334 |
| 95312 | 75-466 | LG 334 |
| 95313 | 75-467 | LG 334 |
| 95314 | 75-468 | LG 334 |
| 95315 | 75-469 | LG 335 |
| 95316 | 75-470 | LG 335 |
| 95317 | 75-471 | LG 335 |
| 95318 | 75-472 | LG 335 |
| 95319 | 75-473 | LG 335 |
| 95320 | 75-474 | LG 335 |
| 95321 | 75-475 | LG 335 |
| 95322 | 75-476 | LG 335 |
| 95323 | 75-477 | LG 335 |
| 95324 | 75-478 | LG 335 |
| 95325 | 75-479 | LG 335 |
| 95326 | 75-480 | LG 335 |
| 95327 | 75-481 | LG 335 |
| 95328 | 75-482 | LG 335 |
| 95329 | 75-483 | LG 335 |
| 95330 | 75-484 | LG 335 |
| 95331 | 75-485 | LG 335 |
| 95332 | 75-486 | LG 335 |
| 95333 | 75-487 | LG 335 |
| 95334 | 75-488 | LG 335 |
| 95335 | 75-489 | LG 335 |
| 95336 | 75-490 | LG 335 |
| 95337 | 75-491 | LG 335 |
| 95338 | 75-492 | LG 335 |
| 95339 | 75-493 | LG 335 |
| 95340 | 75-494 | LG 335 |
| 95341 | 75-495 | LG 335 |
| 95342 | 75-496 | LG 335 |
| 95343 | 75-497 | LG 335 |
| 95344 | 75-498 | LG 335 |
| 95345 | 75-499 | LG 335 |
| 95346 | 75-500 | LG 335 |
| 95349 | 75-525 | LG 334 |
| 95351 | 75-527 | LG 334 |
| 95352 | 75-528 | LG 334 |
| 95353 | 75-529 | LG 334 |
| 95354 | 75-530 | LG 334 |
| 95355 | 75-531 | LG 334 |
| 95356 | 75-532 | LG 334 |
| 95357 | 75-533 | LG 334 |
| 95358 | 75-534 | LG 334 |
| 95359 | 75-535 | LG 334 |
| 95360 | 75-536 | LG 334 |
| 95361 | 75-537 | LG 334 |
| 95362 | 75-538 | LG 334 |
| 95363 | 75-539 | LG 334 |
| 95364 | 75-540 | LG 334 |
| 95365 | 75-541 | LG 334 |
| 95366 | 75-542 | LG 334 |
| 95367 | 75-543 | LG 334 |
| 95368 | 75-544 | LG 334 |
| 95369 | 75-545 | LG 334 |
| 95370 | 75-546 | LG 334 |
| 95371 | 75-547 | LG 334 |
| 95372 | 75-548 | LG 334 |
| 95373 | 75-549 | LG 334 |
| 95374 | 75-550 | LG 334 |
| 95375 | 75-551 | LG 334 |
| 95376 | 75-552 | LG 334 |
| 95377 | 75-553 | LG 334 |
| 95378 | 75-554 | LG 334 |
| 95379 | 75-555 | LG 334 |
| 95380 | 75-556 | LG 334 |
| 95381 | 75-557 | LG 334 |
| 95382 | 75-558 | LG 253 |
| 95383 | 75-559 | LG 334 |
| 95384 | 75-560 | LG 334 |
| 95385 | 75-561 | LG 334 |
| 95386 | 75-562 | LG 334 |
| 95387 | 75-563 | LG 253 |
| 95388 | 75-564 | LG 334 |
| 95389 | 75-565 | LG 253 |
| 95390 | 75-566 | LG 334 |
| 95391 | 75-567 | LG 334 |
| 95392 | 75-568 | LG 334 |
| 95393 | 75-569 | LG 335 |
| 95394 | 75-570 | LG 335 |
| 95395 | 75-571 | LG 335 |
| 95396 | 75-572 | LG 335 |
| 95397 | 75-573 | LG 335 |
| 95398 | 75-574 | LG 335 |
| 95399 | 75-575 | LG 335 |
| 95400 | 75-576 | LG 335 |
| 95401 | 75-577 | LG 335 |
| 95402 | 75-578 | LG 335 |
| 95403 | 75-579 | LG 335 |
| 95404 | 75-580 | LG 335 |
| 95405 | 75-581 | LG 335 |
| 95406 | 75-582 | LG 254 |
| 95407 | 75-583 | LG 335 |
| 95408 | 75-584 | LG 335 |
| 95409 | 75-585 | LG 335 |
| 95410 | 75-586 | LG 335 |
| 95411 | 75-587 | LG 335 |
| 95412 | 75-588 | LG 335 |
| 95413 | 75-589 | LG 335 |
| 95414 | 75-590 | LG 335 |
| 95415 | 75-591 | LG 335 |
| 95416 | 75-592 | LG 335 |
| 95417 | 75-593 | LG 335 |
| 95418 | 75-594 | LG 335 |
| 95419 | 75-595 | LG 335 |
| 95420 | 75-596 | LG 335 |
| 95421 | 75-597 | LG 335 |
| 95422 | 75-598 | LG 335 |
| 95423 | 75-599 | LG 335 |
| 95473 | 45-259 | LG 224 |
| 95474 | 45-000 | LG 237 |
| 95474 | 45-010 | LG 238 |
| 95475 | 45-242 | LG 243 |
| 95481 | 75-326 | LG 334 |
| 95482 | 75-327 | LG 334 |
| 95483 | 75-328 | LG 334 |
| 95484 | 75-329 | LG 334 |
| 95485 | 75-330 | LG 334 |
| 95487 | 75-332 | LG 334 |
| 95488 | 75-333 | LG 334 |
| 95489 | 75-334 | LG 334 |
| 95490 | 75-335 | LG 334 |
| 95491 | 75-336 | LG 334 |
| 95492 | 75-337 | LG 334 |
| 95493 | 75-338 | LG 334 |
| 95494 | 75-339 | LG 334 |
| 95495 | 75-340 | LG 334 |
| 95496 | 75-341 | LG 334 |
| 95497 | 75-342 | LG 334 |
| 95498 | 75-343 | LG 334 |
| 95499 | 75-344 | LG 334 |
| 95500 | 75-345 | LG 334 |
| 95501 | 75-346 | LG 334 |
| 95503 | 75-348 | LG 334 |
| 95504 | 75-349 | LG 334 |
| 95505 | 75-350 | LG 334 |
| 95515 | 34-826 | LG 833 |
| 95516 | 34-824 | LG 832 |
| 95518 | 31-063 | LG 932 |
| 95519 | 75-099 | LG 262 |
| 95520 | 75-197 | LG 262 |
| 95521 | 75-240 | LG 297 |
| 95522 | 75-221 | LG 280 |
| 95524 | 75-058 | LG 255 |
| 95525 | 75-072 | LG 268 |
| 95527 | 75-212 | LG 268 |
| 95529 | 75-582 | LG 254 |
| 95530 | 75-955 | LG 278 |
| 95531 | 75-181 | LG 280 |
| 95532 | 75-226 | LG 281 |
| 95534 | 75-177 | LG 281 |
| 95536 | 75-113 | LG 281 |
| 95540 | 75-114 | LG 281 |
| 95543 | 75-498 | LG 335 |
| 95545 | 75-672 | LG 294 |
| 95546 | 75-540 | LG 334 |
| 95547 | 75-464 | LG 334 |
| 95548 | 75-405 | LG 335 |
| 95549 | 75-246 | LG 295 |
| 95550 | 75-148 | LG 300 |
| 95552 | 75-036 | LG 297 |
| 95555 | 75-055 | LG 255 |
| 95556 | 75-260 | LG 312 |
| 95557 | 75-043 | LG 312 |
| 95558 | 75-054 | LG 312 |
| 95559 | 75-586 | LG 335 |
| 95560 | 75-052 | LG 313 |
| 95562 | 75-044 | LG 313 |
| 95564 | 31-067 | LG 935 |

# 2019 Aftermarket X-Reference

## LASER

| PART No. | OREGON | Page |
|---|---|---|
| 95565 | 33-110 | LG 735 |
| 95566 | 33-111 | LG 735 |
| 95567 | 33-112 | LG 735 |
| 95568 | 33-113 | LG 740 |
| 95570 | 75-091 | LG 302 |
| 95571 | 75-020 | LG 302 |
| 95572 | 75-158 | LG 251 |
| 95573 | 75-435 | LG 334 |
| 95575 | 75-444 | LG 334 |
| 95576 | 75-090 | LG 301 |
| 95577 | 75-338 | LG 334 |
| 95579 | 33-126-1 | LG 736 |
| 95580 | 33-126-1 | LG 736 |
| 95580 | 33-139 | LG 736 |
| 95582 | 75-655 | LG 274 |
| 95583 | 75-656 | LG 274 |
| 95585 | 75-658 | LG 275 |
| 95586 | 75-659 | LG 275 |
| 95590 | 75-496 | LG 335 |
| 95591 | 75-676 | LG 304 |
| 95592 | 75-016 | LG 301 |
| 95593 | 75-161 | LG 255 |
| 95594 | 75-249 | LG 305 |
| 95595 | 75-159 | LG 303 |
| 95596 | 75-035 | LG 302 |
| 95597 | 75-673 | LG 305 |
| 95598 | 75-677 | LG 304 |
| 95599 | 75-005 | LG 307 |
| 95600 | 75-063 | LG 307 |
| 95601 | 75-135 | LG 308 |
| 95602 | 75-679 | LG 309 |
| 95603 | 75-685 | LG 324 |
| 95604 | 75-686 | LG 324 |
| 95605 | 44-101 | LG 837 |
| 95606 | 44-101 | LG 837 |
| 95606 | 44-102 | LG 85 |
| 95607 | 44-367 | LG 838 |
| 95608 | 78-118-0 | LG 830 |
| 95609 | 31-041 | LG 932 |
| 95618 | 75-000 | LG 262 |
| 95619 | 75-107 | LG 254 |
| 95620 | 75-021 | LG 274 |
| 95621 | 75-002 | LG 301 |
| 95622 | 75-159 | LG 303 |
| 95623 | 75-919 | LG 293 |
| 95624 | 75-992 | LG 293 |
| 95642 | 34-209 | LG 826 |
| 95643 | 34-100 | LG 830 |
| 95645 | 34-102 | LG 830 |
| 95646 | 34-103 | LG 830 |
| 95647 | 34-104 | LG 830 |
| 95648 | 34-106 | LG 830 |
| 95649 | 34-107 | LG 823 |
| 95650 | 34-109 | LG 831 |
| 95652 | 45-207 | LG 236 |
| 95654 | 45-216 | LG 224 |
| 95656 | 45-225 | LG 232 |
| 95657 | 45-227 | LG 234 |
| 95662 | 45-241 | LG 224 |
| 95663 | 45-244 | LG 224 |
| 95664 | 45-245 | LG 224 |
| 95666 | 45-253 | LG 224 |
| 95667 | 45-254 | LG 224 |
| 95668 | 45-255 | LG 224 |
| 95669 | 45-256 | LG 224 |
| 95674 | 78-025 | LG 829 |
| 95675 | 78-112 | LG 829 |
| 95676 | 78-113 | LG 829 |
| 95677 | 78-114 | LG 829 |
| 95678 | 78-129 | LG 830 |
| 95679 | 44-371 | LG 834 |
| 95680 | 44-331 | LG 841 |
| 95681 | 44-339 | LG 841 |
| 95682 | 44-369 | LG 837 |
| 97006 | 82-502 | LG 894 |
| 97007 | 65-221 | LG 341 |
| 97013 | 65-220 | LG 340 |
| 97014 | 65-206 | LG 342 |
| 97016 | 65-208 | LG 342 |
| 97024 | 82-493 | LG 869 |
| 97038 | 74-732 | LG 721 |
| 97040 | 74-054 | LG 721 |
| 97041 | 74-072 | LG 721 |
| 97059 | 81-012 | LG 802 |
| 97065 | 76-067-0 | LG 726 |
| 97069 | 76-070-0 | LG 726 |
| 97071 | 76-073-0 | LG 726 |
| 97080 | 45-117 | LG 938 |
| 97107 | 45-103 | LG 938 |
| 97108 | 45-104 | LG 939 |
| 97110 | 45-114 | LG 938 |
| 97111 | 45-301 | LG 804 |
| 97112 | 45-302 | LG 804 |
| 97113 | 45-305 | LG 804 |
| 97114 | 45-306 | LG 804 |
| 97124 | 82-678 | LG 904 |
| 97125 | 82-500 | LG 893 |
| 97129 | 82-013 | LG 891 |
| 97131 | 85-012 | LG 909 |
| 97132 | 85-001 | LG 908 |
| 97133 | 82-677 | LG 903 |
| 97134 | 82-514 | LG 869 |
| 97135 | 82-243 | LG 902 |
| 97137 | 33-399 | LG 944 |
| 97138 | 82-679 | LG 870 |
| 97139 | 82-680 | LG 870 |
| 97173 | 49-016 | LG 759 |
| 97174 | 74-317 | LG 721 |
| 97180 | 76-110 | LG 726 |
| 97185 | 65-222 | LG 341 |
| 97187 | 46-310 | LG 713 |
| 97190 | 46-300 | LG 717 |
| 97196 | 84-004 | LG 675 |
| 97197 | 84-002 | LG 675 |
| 97198 | 84-001 | LG 675 |
| 97199 | 84-007 | LG 675 |
| 97200 | 84-006 | LG 675 |
| 97201 | 80-036 | LG 727 |
| 97202 | 80-014 | LG 727 |
| 97206 | 71-002 | LG 957 |
| 97207 | 71-001 | LG 957 |
| 97208 | 82-501 | LG 894 |
| 97213 | 82-225 | LG 871 |
| 97214 | 85-017 | LG 907 |
| 97225 | 48-001 | LG 914 |
| 97228 | 84-010 | LG 913 |
| 97230 | 31-232 | LG 937 |
| 97231 | 31-240 | LG 937 |
| 97232 | 31-242 | LG 937 |
| 97233 | 31-250 | LG 937 |
| 97234 | 31-252 | LG 937 |
| 97235 | 31-260 | LG 937 |
| 97252 | 43-400-0 | LG 936 |
| 97263 | 31-914 | LG 930 |
| 97265 | 31-100 | LG 929 |
| 97267 | 31-904 | LG 930 |
| 97269 | 31-909 | LG 928 |
| 97271 | 31-908 | LG 929 |
| 97272 | 31-908 | LG 929 |
| 97273 | 31-909 | LG 928 |
| 97275 | 31-910 | LG 929 |
| 97276 | 31-911 | LG 929 |
| 97277 | 31-050 | LG 924 |
| 97287 | 43-404 | LG 928 |
| 97288 | 43-011 | LG 935 |
| 97289 | 43-012 | LG 927 |
| 97290 | 31-051 | LG 924 |
| 97292 | 31-052 | LG 923 |
| 97299 | 49-058 | LG 768 |
| 97300 | 49-079 | LG 768 |
| 97318 | 49-034 | LG 630 |
| 97403 | 73-560 | LG 844 |
| 97437 | 86-009 | LG 781 |
| 97467 | 33-003 | LG 926 |
| 97491 | 82-503 | LG 895 |
| 97492 | 65-006 | LG 340 |
| 97493 | 65-007 | LG 342 |
| 97495 | 85-005 | |
| 97497 | 82-495 | LG 870 |
| 97502 | 32-101 | LG 676 |
| 97503 | 32-105 | LG 676 |
| 97504 | 32-107 | LG 676 |
| 97505 | 32-111 | LG 676 |
| 97506 | 32-112 | LG 676 |
| 97507 | 32-114 | LG 676 |
| 97508 | 32-116 | LG 676 |
| 97514 | 33-005 | LG 927 |
| 97515 | 31-907 | LG 929 |
| 97521 | 42-008 | LG 945 |
| 97522 | 33-386 | LG 942 |
| 97523 | 43-425 | LG 936 |
| 97525 | 43-426 | LG 936 |
| 97531 | 55-125 | LG 771 |
| 97539 | 33-207 | LG 949 |
| 97540 | 33-385 | LG 942 |
| 97544 | 82-511 | LG 895 |
| 97545 | 82-512 | LG 895 |
| 97546 | 82-513-2 | LG 896 |
| 97547 | 82-515 | LG 896 |
| 97548 | 82-516 | LG 896 |
| 97549 | 82-511 | LG 895 |
| 97550 | 85-010 | |
| 97551 | 82-512 | LG 895 |
| 97553 | 82-515 | LG 896 |
| 97583 | 45-109 | LG 939 |
| 97585 | 82-510 | LG 872 |
| 97586 | 82-220 | LG 871 |
| 97588 | 31-232 | LG 937 |
| 97589 | 31-240 | LG 937 |
| 97590 | 31-242 | LG 937 |
| 97591 | 31-250 | LG 937 |
| 97592 | 31-252 | LG 937 |
| 97593 | 55-126 | LG 771 |
| 97596 | 84-011 | LG 675 |
| 97596 | 84-101 | LG 954 |
| 97600 | 86-037 | LG 781 |
| 97602 | 33-709 | LG 916 |
| 97602 | 33-779 | LG 916 |
| 97604 | 33-708 | LG 915 |
| 97605 | 33-700 | LG 915 |
| 97606 | 33-704 | LG 919 |
| 97607 | 33-707 | LG 920 |
| 97609 | 33-719 | LG 915 |
| 97611 | 33-710 | LG 918 |
| 97612 | 33-715 | LG 919 |
| 97613 | 33-702 | LG 919 |
| 97616 | 33-718 | LG 919 |
| 97618 | 33-720 | LG 920 |
| 97621 | 33-716 | LG 921 |
| 97622 | 33-712 | LG 921 |
| 97624 | 33-714 | LG 918 |
| 97631 | 65-226 | LG 341 |
| 97635 | 82-332 | LG 891 |
| 97636 | 82-333 | LG 892 |
| 97641 | 85-023 | LG 907 |
| 97642 | 82-221 | LG 872 |
| 97644 | 33-399 | LG 944 |
| 97645 | 33-392 | LG 944 |
| 97648 | 33-006 | LG 927 |
| 97649 | 33-759-0 | LG 926 |
| 97651 | 33-760-0 | LG 926 |
| 97652 | 33-761 | LG 926 |
| 97653 | 33-751 | LG 927 |
| 97657 | 33-754 | LG 927 |
| 97658 | 31-057 | LG 930 |
| 97659 | 31-065 | LG 922 |
| 97660 | 31-061 | LG 922 |
| 97661 | 31-062 | LG 922 |
| 97662 | 31-060 | LG 922 |
| 97663 | 31-052 | LG 923 |
| 97665 | 31-058 | LG 931 |
| 97666 | 45-132 | LG 939 |
| 97667 | 82-100 | LG 802 |
| 97672 | 33-700 | LG 915 |
| 97683 | 31-083 | LG 930 |
| 97685 | 31-087 | LG 930 |
| 97687 | 31-068 | LG 922 |
| 97688 | 31-049 | LG 923 |
| 97688 | 31-060 | LG 922 |
| 97689 | 31-070 | LG 922 |
| 97692 | 31-070 | LG 922 |
| 97693 | 31-066 | LG 923 |
| 97696 | 82-015 | |
| 97697 | 82-019 | LG 875 |
| 97698 | 82-017 | LG 875 |
| 97699 | 82-018 | LG 875 |
| 97700 | 82-016 | LG 875 |
| 97701 | 82-320 | LG 874 |
| 97702 | 82-411 | LG 878 |
| 97703 | 82-322 | LG 883 |
| 97704 | 82-323 | LG 883 |
| 97708 | 82-344 | LG 885 |
| 97710 | 82-346 | LG 885 |
| 97711 | 82-347 | LG 885 |

## LASER

| PART No. | OREGON | Page |
|---|---|---|
| 97712 | 82-348 | LG 885 |
| 97713 | 82-318 | LG 884 |
| 97716 | 82-318 | LG 884 |
| 97717 | 82-349 | LG 886 |
| 97718 | 82-328 | LG 891 |
| 97719 | 82-308 | LG 874 |
| 97720 | 82-354 | LG 892 |
| 97721 | 82-355 | LG 892 |
| 97722 | 82-356 | LG 893 |
| 97725 | 82-245 | |
| 97727 | 82-325 | LG 903 |
| 97728 | 82-674 | LG 904 |
| 97729 | 82-675 | LG 904 |
| 97730 | 82-676 | LG 904 |
| 97732 | 33-735 | LG 917 |
| 97733 | 33-728 | LG 917 |
| 97738 | 31-057 | LG 930 |
| 97739 | 31-064 | LG 931 |
| 97740 | 31-081 | LG 936 |
| 97741 | 43-426 | LG 936 |
| 97760 | 82-411 | LG 878 |
| 97761 | 82-358 | LG 892 |
| 97762 | 82-359 | LG 893 |
| 97763 | 82-360 | LG 893 |
| 97764 | 65-204 | LG 342 |
| 97765 | 33-117 | LG 733 |
| 97766 | 33-130 | LG 733 |
| 97767 | 33-114 | LG 734 |
| 97768 | 33-118-1 | LG 733 |
| 97769 | 33-119-1 | LG 734 |
| 97770 | 33-120 | LG 734 |
| 97771 | 33-121 | LG 734 |
| 97772 | 33-122-1 | LG 734 |
| 97773 | 33-104 | LG 735 |
| 97776 | 33-132 | LG 735 |
| 97777 | 33-183 | LG 735 |
| 97778 | 33-124 | LG 736 |
| 97779 | 33-126-1 | LG 736 |
| 97780 | 33-133 | LG 736 |
| 97781 | 33-134 | LG 736 |
| 97782 | 33-139 | LG 736 |
| 97783 | 33-184 | LG 737 |
| 97784 | 33-115 | LG 738 |
| 97785 | 33-127 | LG 737 |
| 97786 | 33-135 | LG 737 |
| 97787 | 33-136 | LG 737 |
| 97788 | 33-137 | LG 737 |
| 97789 | 33-138 | LG 738 |
| 97790 | 33-185 | LG 737 |
| 97791 | 33-187 | LG 738 |
| 97792 | 33-116 | LG 735 |
| 97793 | 33-128-1 | LG 741 |
| 97794 | 33-188 | LG 738 |
| 97795 | 33-189 | LG 740 |
| 97796 | 33-190 | LG 741 |
| 97798 | 82-026 | LG 872 |
| 97803 | 85-028 | LG 908 |
| 97804 | 85-029 | LG 909 |
| 98008 | 49-083 | LG 913 |
| 98020 | 55-110 | LG 765 |
| 98069 | 49-667 | LG 750 |
| 98081 | 49-101 | LG 602 |
| 98082 | 49-101 | LG 602 |
| 98083 | 49-693 | LG 602 |
| 98085 | 49-201 | LG 608 |
| 98086 | 49-401 | LG 605 |
| 98087 | 49-071 | LG 602 |
| 98089 | 49-070 | LG 604 |
| 98090 | 49-301 | LG 606 |
| 98092 | 49-102 | LG 602 |
| 98096 | 49-827 | LG 608 |
| 98097 | 49-846 | LG 608 |
| 98098 | 49-213 | LG 623 |
| 98101 | 49-008 | LG 623 |
| 98103 | 49-004 | LG 622 |
| 98104 | 49-003 | LG 622 |
| 98105 | 49-002 | LG 623 |
| 98106 | 49-006 | LG 622 |
| 98107 | 49-006 | LG 622 |
| 98108 | 49-005 | LG 622 |
| 98110 | 49-039 | LG 629 |
| 98113 | 49-077 | LG 628 |
| 98114 | 49-025 | LG 629 |
| 98115 | 49-035 | LG 629 |
| 98116 | 49-307 | LG 625 |
| 98117 | 49-840 | LG 609 |
| 98123 | 49-989 | LG 602 |
| 98124 | 49-128 | LG 747 |
| 98125 | 49-036 | LG 628 |
| 98130 | 49-007 | LG 622 |
| 98132 | 49-133 | LG 609 |
| 98133 | 49-978 | LG 609 |
| 98134 | 49-009 | LG 625 |
| 98135 | 49-230 | LG 609 |
| 98136 | 49-033 | LG 628 |
| 98138 | 49-001 | LG 622 |
| 98146 | 49-363 | LG 624 |
| 98149 | 33-182-0 | LG 789 |
| 98156 | 33-606 | LG 789 |
| 98159 | 33-628 | LG 789 |
| 98163 | 33-601 | LG 789 |
| 98164 | 33-628 | LG 789 |
| 98170 | 33-208 | LG 866 |
| 98171 | 33-070 | LG 742 |
| 98183 | 33-008 | LG 789 |
| 98189 | 33-016 | LG 789 |
| 98190 | 33-333 | LG 786 |
| 98191 | 33-363 | LG 787 |
| 98192 | 33-362 | LG 784 |
| 98194 | 33-362 | LG 784 |
| 98195 | 33-345 | LG 784 |
| 98197 | 33-320-0 | LG 731 |
| 98200 | 33-346 | LG 786 |
| 98201 | 33-365 | LG 784 |
| 98204 | 33-343 | LG 787 |
| 98205 | 33-340 | LG 784 |
| 98206 | 33-342 | LG 784 |
| 98207 | 33-344 | LG 784 |
| 98209 | 33-348 | LG 785 |
| 98212 | 33-330 | LG 729 |
| 98214 | 33-332 | LG 730 |
| 98215 | 33-334 | LG 730 |
| 98216 | 33-335 | LG 730 |
| 98220 | 33-053 | LG 789 |
| 98223 | 33-201 | LG 867 |
| 98232 | 47-161 | LG 744 |
| 98236 | 47-014 | LG 743 |
| 98238 | 47-038 | LG 743 |
| 98249 | 47-080 | LG 744 |
| 98250 | 47-081 | LG 744 |
| 98251 | 47-160 | LG 744 |
| 98253 | 33-394 | LG 944 |
| 98254 | 33-388 | LG 943 |
| 98255 | 33-023 | LG 949 |
| 98256 | 33-397 | LG 942 |
| 98257 | 33-398 | LG 944 |
| 98258 | 33-023 | LG 949 |
| 98258 | 33-317-0 | LG 729 |
| 98259 | 33-337 | LG 730 |
| 98260 | 33-341 | LG 784 |
| 98263 | 49-231 | LG 630 |
| 98267 | 33-186 | LG 789 |
| 98268 | 33-419 | LG 732 |
| 98269 | 49-070 | LG 604 |
| 98271 | 49-085 | LG 769 |
| 98275 | 33-347 | LG 784 |
| 98276 | 33-402 | LG 731 |
| 98277 | 49-305 | LG 603 |
| 98278 | 49-078 | LG 603 |
| 98279 | 49-038 | LG 628 |
| 98281 | 49-840 | LG 609 |
| 98284 | 50-638 | LG 596 |
| 98288 | 49-230 | LG 609 |
| 98290 | 49-913 | LG 624 |
| 98292 | 50-634 | LG 597 |
| 98293 | 49-915 | LG 597 |
| 98294 | 50-637 | LG 597 |
| 98295 | 50-638 | LG 596 |
| 98298 | 49-853 | LG 611 |
| 98299 | 49-877 | LG 613 |
| 98300 | 49-882-0 | LG 613 |
| 98301 | 49-216 | LG 602 |
| 98302 | 49-145 | LG 603 |
| 98303 | 49-146 | LG 603 |
| 98304 | 49-147 | LG 603 |
| 98305 | 49-148 | LG 603 |
| 98306 | 49-220 | LG 603 |
| 98307 | 49-221 | LG 604 |
| 98308 | 49-222 | LG 604 |
| 98309 | 49-223 | LG 604 |
| 98310 | 49-149 | LG 604 |
| 98311 | 49-201 | LG 608 |
| 98312 | 49-993 | LG 624 |
| 98313 | 49-995 | LG 625 |
| 98314 | 49-912 | LG 624 |
| 98316 | 49-911 | LG 624 |
| 98317 | 55-157 | LG 763 |
| 98320 | 49-224 | LG 623 |
| 98328 | 33-352-0 | LG 784 |
| 98329 | 33-353 | LG 785 |
| 98330 | 33-518 | LG 785 |
| 98331 | 33-519 | LG 785 |
| 98333 | 49-997 | LG 628 |
| 98334 | 49-996 | LG 629 |
| 98339 | 33-542 | LG 950 |
| 98342 | 33-418 | LG 731 |
| 98343 | 33-417 | LG 731 |
| 98344 | 33-402 | LG 731 |
| 98348 | 33-407 | LG 732 |
| 98352 | 33-319-0 | LG 729 |
| 98353 | 33-318-0 | LG 729 |
| 98360 | 49-307 | LG 625 |
| 98369 | 49-214 | LG 624 |
| 98370 | 49-362 | LG 624 |
| 98371 | 33-521 | LG 785 |
| 98372 | 33-520 | LG 785 |
| 98373 | 33-522 | LG 785 |

## LOWES

| | | |
|---|---|---|
| 128568 | 195-032 | LG 425 |
| 149120 | 97-020 | LG 526 |
| 188356 | 98-061 | LG 404 |
| 19889 | 195-005 | LG 373 |
| 228458 | 91-039 | LG 487 |
| 228459 | 191-108 | LG 484 |
| 228461 | 92-104 | LG 485 |
| 230601 | 92-011 | LG 490 |
| 230611 | 97-001 | LG 527 |
| 272788 | 95-057 | LG 380 |
| 272798 | 95-615 | LG 426 |
| 36480 | 98-051 | LG 521 |
| 41347 | 198-059 | LG 403 |
| 95128 | 198-049 | LG 518 |
| HU22054 | 195-072 | LG 530 |

## MENARDS

| | | |
|---|---|---|
| 2704655 | 98-629 | LG 412 |
| 2705003 | 195-032 | LG 425 |
| 2705004 | 195-005 | LG 373 |
| 2705005 | 95-052 | LG 398 |
| 2705006 | 195-033 | LG 400 |
| 2705007 | 191-392 | LG 488 |
| 2705008 | 91-389 | LG 538 |
| 2705009 | 91-039 | LG 487 |
| 2705012 | 195-003 | LG 400 |
| 2705022 | 195-067 | LG 380 |
| 2705023 | 195-062 | LG 376 |

## MOWMORE

| | | |
|---|---|---|
| AR16A | 91-003 | LG 370 |
| AR20 | 91-005 | LG 458 |
| BB587 | 48-145 | LG 698 |
| BC16A | 93-009 | LG 476 |
| BC16B | 93-005 | LG 447 |
| BC18A | 93-010 | LG 432 |
| BC18C | 93-006 | LG 444 |
| BC21A | 93-008 | LG 510 |
| BC21B | 93-011 | LG 557 |
| BC21C | 93-013 | LG 480 |
| BC25 | 93-025 | LG 482 |
| BO111 | 75-072 | LG 268 |
| BO730 | 75-326 | LG 334 |
| BO731 | 75-336 | LG 334 |
| BO8803 | 75-180 | LG 254 |
| BO8809 | 75-130 | LG 269 |
| BO8810 | 75-095 | LG 268 |
| BO8811 | 75-125 | LG 269 |
| BOP01A | 34-024 | LG 822 |
| BOP12A | 78-649 | LG 841 |
| BOP183 | 78-678 | LG 835 |
| BOP18N | 78-641 | LG 835 |

# 2019 Aftermarket X-Reference

## MOWMORE

| PART No. | OREGON | Page |
|---|---|---|
| BOP22B | 78-643 | LG 835 |
| BOP813 | 78-020 | LG 825 |
| BU16C | 91-256 | LG 437 |
| BU18HL | 91-256 | LG 437 |
| BUP246 | 78-646 | LG 841 |
| BUP786 | 78-041 | LG 823 |
| BUP7861 | 34-007 | LG 826 |
| BUP7918 | 78-121 | LG 827 |
| BUP88 | 78-031 | LG 826 |
| CC0361 | 92-139 | LG 398 |
| CC0362 | 98-091 | LG 516 |
| CC0363 | 98-071 | LG 411 |
| CC10383 | 91-144 | LG 454 |
| CC10636 | 91-073 | LG 512 |
| CC11250 | 92-015 | LG 407 |
| CC11479 | 98-087 | LG 407 |
| CC11480 | 198-086 | LG 565 |
| CC11805 | 98-080 | LG 512 |
| CC15 | 91-414 | LG 405 |
| CC16A | 91-333 | LG 406 |
| CC17 | 91-415 | LG 406 |
| CC18 | 91-440 | LG 408 |
| CC19A | 91-329 | LG 409 |
| CC21A | 91-332 | LG 412 |
| CT01 | 70-340 | LG 959 |
| CT02 | 70-339 | LG 959 |
| CT24 | 70-312 | LG 959 |
| CT25 | 70-317 | LG 959 |
| CT28 | 70-328 | LG 959 |
| CT29 | 70-335 | LG 959 |
| CT30 | 70-338 | LG 959 |
| CT31 | 70-349 | LG 959 |
| CT33 | 70-351 | LG 959 |
| CT45 | 70-316 | LG 959 |
| CT46 | 70-320 | LG 959 |
| CT47 | 70-326 | LG 959 |
| CT514 | 70-307 | LG 960 |
| CT694 | 70-301 | LG 959 |
| CT8456 | 70-315 | LG 960 |
| CT8457 | 70-314 | LG 959 |
| CT8540 | 70-308 | LG 959 |
| CT8541 | 70-330 | LG 959 |
| CT8688 | 70-357 | LG 958 |
| CYS2218 | 48-200 | LG 694 |
| CYS2238 | 09-801 | LG 229 |
| CYS2243 | 48-205 | LG 694 |
| CYS6885 | 09-808 | LG 697 |
| CYS6886 | 09-803 | LG 697 |
| CYS7125 | 48-202 | LG 694 |
| CYS8592 | 09-804 | LG 233 |
| DBU5713 | 45-127 | LG 244 |
| DBU8305 | 45-030 | LG 245 |
| DC14 | 91-501 | LG 413 |
| DC17 | 91-502 | LG 477 |
| DC17HL | 91-508 | LG 419 |
| DC20HL | 91-506 | LG 473 |
| DC6404 | 91-507 | LG 415 |
| DC6441 | 91-509 | LG 424 |
| DC6442 | 91-508 | LG 419 |
| DC6790 | 91-505 | LG 477 |
| DC6833 | 91-515 | LG 415 |
| DI14 | 91-500 | LG 416 |
| DI15HL | 91-167 | LG 416 |
| DI17HL | 91-508 | LG 419 |
| DI19L | 91-714 | LG 543 |
| DI20 | 91-253 | LG 415 |
| DI6766 | 91-146 | LG 419 |
| DP1191 | 09-802 | LG 233 |
| DP2224 | 43-075 | |
| DP8372 | 48-141 | LG 249 |
| DUB7262 | 45-188 | LG 230 |
| EBGM | 40-140 | LG 584 |
| EBS10 | 40-503 | LG 589 |
| EBS276 | 40-840 | LG 588 |
| EBS6788 | 40-010 | LG 588 |
| EBS9 | 40-402 | LG 589 |
| EBS94 | 40-843 | LG 588 |
| EBS94A | 40-845 | LG 588 |
| EBS98 | 40-807 | LG 585 |
| EBS9A | 40-411 | LG 589 |
| EBU10 | 40-409 | LG 585 |
| EBU8 | 40-141 | LG 585 |
| EBU9 | 40-130 | LG 586 |
| EN16 | 91-266 | LG 431 |
| EN211 | 75-260 | LG 312 |
| EX0371 | 90-205 | LG 501 |
| EX0372 | 90-207 | LG 472 |
| EX0373 | 90-208 | LG 502 |
| EX10071 | 91-256 | LG 437 |
| EX10667 | 91-506 | LG 473 |
| EX11139 | 91-311 | LG 439 |
| EX11224 | 92-031 | LG 433 |
| EX11229 | 92-033 | LG 442 |
| EX11231 | 92-029 | LG 435 |
| EX11240 | 92-026 | LG 435 |
| EX11241 | 92-027 | LG 432 |
| EX11242 | 92-028 | LG 433 |
| EX11249 | 92-025 | LG 440 |
| EX11267 | 96-322 | LG 567 |
| EX11495 | 92-030 | LG 567 |
| EX12027 | 492-732 | LG 442 |
| EX16 | 91-183 | LG 370 |
| EX16B | 91-368 | LG 460 |
| EX18 | 91-184 | LG 421 |
| EX18A | 91-181 | LG 495 |
| EX18C | 91-218 | LG 420 |
| EX18D | 91-170 | LG 437 |
| EX18E | 91-335 | LG 420 |
| EX20 | 91-378 | LG 414 |
| EX20A | 91-217 | LG 558 |
| EX20B | 91-311 | LG 439 |
| EX20HL | 91-188 | LG 439 |
| EX6481 | 91-374 | LG 442 |
| EX6820 | 91-373 | LG 383 |
| EX6821 | 91-369 | LG 434 |
| EX9487 | 91-313 | LG 494 |
| EXL11557 | 92-044 | LG 471 |
| EXL11721 | 92-045 | LG 474 |
| EXL13623 | 92-738 | LG 472 |
| EXP009 | 34-019 | LG 821 |
| EXP095 | 78-640 | LG 835 |
| EXP582 | 34-023 | LG 822 |
| GH13463 | 91-532 | LG 448 |
| GH13464 | 91-531 | LG 393 |
| GH15 | 91-557 | LG 545 |
| GH18 | 91-558 | LG 448 |
| GH18A | 91-535 | LG 448 |
| GH18HL | 91-532 | LG 448 |
| GH21,A | 91-547 | LG 449 |
| GH21A | 91-547 | LG 449 |
| GH21HL | 91-531 | LG 393 |
| GH21HLA | 91-531 | LG 393 |
| GH6401 | 91-547 | LG 449 |
| GH6402 | 91-544 | LG 397 |
| GR14 | 91-244 | LG 450 |
| GR17 | 91-242 | LG 371 |
| GR17A | 91-255 | LG 454 |
| GR20C | 91-253 | LG 415 |
| GR20D | 91-253 | LG 415 |
| GR20E | 91-239 | LG 454 |
| GR24 | 91-254 | LG 456 |
| GR914 | 75-144 | LG 284 |
| GRP7937 | 78-021 | LG 832 |
| HO21 | 91-291 | LG 457 |
| HO325100 | 92-101 | LG 458 |
| HO325104 | 92-102 | LG 458 |
| HO6430 | 91-517 | LG 457 |
| HO6431 | 91-516 | LG 457 |
| JA07 | 75-324 | LG 334 |
| JA08 | 75-332 | LG 334 |
| JA19 | 75-561 | LG 334 |
| JA21 | 75-432 | LG 334 |
| JA25T | 91-352 | LG 482 |
| JA63 | 75-436 | LG 334 |
| JA78 | 75-593 | LG 335 |
| JA81 | 75-541 | LG 334 |
| JA85 | 75-576 | LG 335 |
| JA88 | 75-543 | LG 334 |
| JD0284 | 91-079 | LG 485 |
| JD0291 | 90-348 | LG 484 |
| JD0292 | 90-354 | LG 488 |
| JD10074 | 92-119 | LG 492 |
| JD10634 | 191-108 | LG 484 |
| JD10635 | 191-139 | LG 491 |
| JD12380 | 92-110 | LG 491 |
| JD12643 | 92-114 | LG 493 |
| JD16A | 91-383 | LG 484 |
| JD16B | 91-381 | LG 483 |
| JD18 | 91-403 | LG 488 |
| JD18A | 91-384 | LG 487 |
| JD18B | 91-380 | LG 538 |
| JD20 | 91-394 | LG 489 |
| JD25 | 91-395 | LG 493 |
| JD25A | 91-395 | LG 493 |
| JD30B | 91-399 | LG 493 |
| JD330150 | 91-079 | LG 485 |
| JD330437 | 92-118 | LG 488 |
| JD330501 | 92-113 | LG 490 |
| JD38A | 191-392 | LG 488 |
| JD38B | 91-398 | LG 488 |
| JD46 | 91-389 | LG 538 |
| JD50 | 91-393 | LG 485 |
| JD60 | 91-391 | LG 489 |
| JD6479 | 91-078 | LG 490 |
| JD6480 | 91-138 | LG 488 |
| JD6737 | 91-400 | LG 488 |
| KU16 | 91-430 | LG 497 |
| KU16A | 91-433 | LG 498 |
| KU19 | 91-436 | LG 498 |
| KU20B | 91-438 | LG 500 |
| KU330827 | 92-116 | LG 500 |
| LB21 | 92-011 | LG 490 |
| MB10072 | 96-364 | LG 488 |
| MB10073 | 396-730 | LG 490 |
| MB11279 | 96-321 | LG 436 |
| MB11469 | 96-749 | LG 433 |
| MB11558 | 396-787 | LG 500 |
| MB12733 | 596-808 | LG 472 |
| MB12809 | 91-938 | LG 514 |
| MB12821 | 90-348 | LG 484 |
| MB12919 | 92-676 | LG 491 |
| MB12920 | 92-675 | LG 484 |
| MB13016 | 96-344 | LG 536 |
| MB6294 | 96-344 | LG 536 |
| MB6296 | 96-310 | LG 444 |
| MB6297 | 96-630 | LG 556 |
| MB6298 | 96-323 | LG 477 |
| MB6299 | 96-347 | LG 387 |
| MB6300 | 96-308 | LG 456 |
| MB6301 | 96-633 | LG 556 |
| MB6302 | 96-628 | LG 528 |
| MB6303 | 96-319 | LG 415 |
| MB6308 | 96-600 | LG 569 |
| MB6309 | 96-329 | LG 449 |
| MB6311 | 96-346 | LG 449 |
| MB6312 | 96-303 | LG 416 |
| MB6314 | 96-332 | LG 484 |
| MB6315 | 96-306 | LG 538 |
| MB6316 | 396-714 | LG 413 |
| MB6317 | 96-620 | LG 551 |
| MB6410 | 94-618 | LG 506 |
| MB6415 | 96-343 | LG 395 |
| MB6426 | 99-617 | LG 395 |
| MB6496 | 96-394 | LG 538 |
| MB9883 | 96-341 | LG 446 |
| MB9885 | 94-615 | LG 370 |
| MP7675 | 33-384 | LG 947 |
| MP7922 | 33-410 | LG 947 |
| MTD1015 | 98-019 | LG 516 |
| MTD1021 | 98-057 | LG 513 |
| MTD1022 | 98-056 | LG 512 |
| MTD1024 | 198-058 | LG 517 |
| MTD1026 | 198-058 | LG 517 |
| MTD1029 | 198-063 | LG 513 |
| MTD1030 | 98-061 | LG 404 |
| MTD1031 | 198-153 | LG 520 |
| MTD1032 | 198-059 | LG 403 |
| MTD1037 | 98-054 | LG 574 |
| MTD1038 | 98-069 | LG 404 |
| MTD6003 | 98-487 | LG 513 |
| MTD6006 | 98-044 | LG 409 |
| MTD6019 | 98-486 | LG 512 |
| MTD6028 | 98-499 | LG 519 |
| MTD6126 | 98-537 | LG 516 |
| MTD6139 | 98-007 | LG 401 |
| MTD6143 | 98-496 | LG 515 |
| MTD6423 | 198-049 | LG 518 |
| MTD6424 | 98-051 | LG 521 |
| MTD6425 | 98-050 | LG 521 |
| MTD6438 | 98-066 | LG 409 |
| MTD6439 | 98-001 | LG 517 |
| MU10066 | 97-022 | LG 524 |
| MU1124 | 97-105 | LG 523 |
| MU2013 | 97-015 | LG 527 |

X

## MOWMORE

| PART No. | OREGON | Page |
|---|---|---|
| MU6027 | 97-330 | LG 528 |
| MU6113 | 97-123 | LG 537 |
| MU6119 | 97-118 | LG 524 |
| MU6144 | 97-005 | LG 527 |
| MU6162 | 97-020 | LG 526 |
| MU6166 | 97-008 | LG 526 |
| MU6174 | 97-001 | LG 527 |
| MU6408 | 97-017 | LG 537 |
| MU6470 | 97-018 | LG 523 |
| MU6471 | 97-001 | LG 527 |
| MU9896 | 97-012 | LG 537 |
| MU9897 | 97-008 | LG 526 |
| PPBU11 | 75-222 | LG 252 |
| PPBU543 | 75-443 | LG 334 |
| PPBU643 | 75-223 | LG 269 |
| PPBU661 | 75-558 | LG 253 |
| PPBU861 | 75-546 | LG 334 |
| PPEN210 | 75-582 | LG 254 |
| PPEN212 | 75-440 | LG 334 |
| PPEX16 | 75-539 | LG 334 |
| PPEX17 | 75-586 | LG 335 |
| PPEX300 | 75-113 | LG 281 |
| PPEX80 | 75-031 | LG 278 |
| PPGR2000 | 75-533 | LG 334 |
| PPGR2037 | 75-565 | LG 253 |
| PPGR3000 | 75-589 | LG 335 |
| PPGV195 | 75-439 | LG 334 |
| PPGV213 | 75-437 | LG 334 |
| PPGV289 | 75-489 | LG 335 |
| PPGV545 | 75-435 | LG 334 |
| PPGV944 | 75-446 | LG 334 |
| PPJA10 | 75-333 | LG 334 |
| PPT0160 | 75-165 | LG 322 |
| SB484 | 45-295 | LG 232 |
| SB814 | 45-002 | LG 237 |
| SC04 | 75-054 | LG 312 |
| SC16 | 91-620 | LG 470 |
| SC16HL | 91-621 | LG 563 |
| SC18 | 91-622 | LG 536 |
| SC18HL | 91-623 | LG 485 |
| SC21 | 91-626 | LG 552 |
| SC21HL | 91-628 | LG 387 |
| SC24 | 91-627 | LG 482 |
| SC285 | 75-048 | LG 313 |
| SC286 | 75-058 | LG 255 |
| SC295 | 75-568 | LG 334 |
| SC44 | 75-578 | LG 335 |
| SC472 | 75-444 | LG 334 |
| SC65 | 75-047 | LG 313 |
| SC81 | 75-580 | LG 335 |
| SC87 | 75-154 | LG 312 |
| SC89 | 75-055 | LG 255 |
| SE10377 | 95-068 | LG 376 |
| SE6038 | 95-023 | LG 380 |
| SE6123 | 95-036 | LG 463 |
| SE6124 | 195-033 | LG 400 |
| SE6196 | 95-018 | LG 399 |
| SE6235 | 95-051 | LG 465 |
| SE6236 | 195-021 | LG 468 |
| SE6263 | 95-049 | LG 459 |
| SE6437 | 95-045 | LG 374 |
| SE6495 | 95-052 | LG 398 |
| SE9170 | 95-052 | LG 398 |
| SE9810 | 95-057 | LG 380 |
| SH1226 | 82-306 | LG 874 |
| SH5999 | 82-305 | LG 908 |
| SK44 | 75-221 | LG 280 |
| SN16A | 99-126 | LG 501 |
| SN17 | 91-123 | LG 395 |
| SN20SD | 99-121 | LG 551 |
| SN21A | 91-127 | LG 396 |
| SN21B | 91-127 | LG 396 |
| SN21SD | 99-103 | LG 551 |
| SN21SDA | 99-107 | LG 551 |
| SN236 | 75-073 | LG 319 |
| SN28 | 99-113 | LG 528 |
| SN30 | 99-112 | LG 556 |
| SN33 | 99-117 | LG 556 |
| SN353 | 75-585 | LG 335 |
| SN496 | 75-036 | LG 297 |
| SN53 | 75-353 | LG 319 |
| SN677 | 75-594 | LG 335 |
| SN680 | 75-240 | LG 297 |
| SN749 | 75-068 | LG 318 |
| SN778 | 75-491 | LG 335 |
| SN779 | 75-584 | LG 335 |
| SN799 | 75-403 | LG 256 |
| SN87 | 75-325 | LG 334 |
| SNP8478 | 34-021 | LG 833 |
| SR-3 | 31-230 | LG 937 |
| SR-4 | 31-240 | LG 937 |
| SR-5 | 31-250 | LG 937 |
| SR-6 | 31-260 | LG 937 |
| T063 | 71-101 | LG 956 |
| T175 | 71-110 | LG 956 |
| T353 | 71-500 | |
| T403 | 71-108 | LG 957 |
| T441 | 71-417 | LG 957 |
| T453 | 71-405 | LG 956 |
| T459 | 71-106 | LG 957 |
| T488 | 71-250 | LG 956 |
| T503 | 71-107 | LG 957 |
| T553 | 71-800 | LG 956 |
| T641 | 71-406 | LG 956 |
| T726 | 71-407 | LG 956 |
| T726A | 71-418 | LG 957 |
| T853 | 71-816 | LG 956 |
| T878 | 71-511 | LG 956 |
| T898 | 71-104 | LG 956 |
| T998/TU120 | 71-098 | LG 956 |
| TC768 | 60-188 | LG 718 |
| TC985 | 60-240 | LG 719 |
| TE15 | 30-141 | LG 217 |
| TE81 | 30-205 | LG 219 |
| TE82 | 30-083 | LG 219 |
| te8330 | 30-740 | LG 218 |
| TE84 | 30-081 | LG 205 |
| TE85 | 30-082 | LG 205 |
| TE86 | 30-080 | LG 205 |
| TE8785 | 30-030 | LG 218 |
| TO10928 | 94-051 | LG 570 |
| TO10929 | 94-322 | LG 520 |
| TO11821 | 94-069 | LG 441 |
| TO14C | 91-804 | LG 560 |
| TO15 | 94-026 | LG 369 |
| TO15A | 94-061 | LG 561 |
| TO15HL | 94-039 | LG 561 |
| TO16A | 91-806 | LG 447 |
| TO18 | 94-018 | LG 565 |
| TO18HLA | 94-022 | LG 565 |
| TO19C | 94-038 | LG 568 |
| TO19D | 94-032 | LG 568 |
| TO20A | 94-029 | LG 414 |
| TO21A | 94-017 | LG 441 |
| TO21B | 94-770 | LG 569 |
| TO21H | 94-019 | LG 570 |
| TO21R | 94-127 | LG 569 |
| TO21RA | 94-017 | LG 441 |
| TO25 | 94-011 | LG 572 |
| TO25C | 94-040 | LG 573 |
| TO290 | 75-205 | LG 322 |
| TO32 | 94-021 | LG 573 |
| TO320 | 75-429 | LG 334 |
| TO530 | 75-451 | LG 334 |
| TO670 | 75-043 | LG 312 |
| TO750 | 75-570 | LG 335 |
| TO890 | 75-571 | LG 335 |
| TO9171 | 91-503 | LG 424 |
| TS088 | 71-109 | LG 956 |
| TS253 | 71-275 | LG 956 |
| TS662 | 71-400 | LG 956 |
| TS762 | 71-278 | |
| TS862 | 71-401 | LG 956 |
| TU012 | 71-408 | LG 957 |
| TU405 | 71-403 | LG 956 |
| TU456 | 71-404 | |
| TU512 | 71-105 | LG 957 |
| TU606S | 71-102 | LG 956 |
| TU612 | 71-273 | LG 957 |
| TU810 | 71-100 | LG 956 |
| TU825 | 71-411 | LG 956 |
| WA20R | 91-911 | LG 576 |
| WA22L | 91-912 | LG 576 |
| WA22R | 91-913 | LG 576 |
| WA25L | 91-917 | LG 576 |
| WA25R | 91-918 | LG 576 |
| WA41 | 75-535 | LG 334 |
| WB5848 | 45-014 | LG 225 |
| WB7950 | 45-047 | LG 241 |
| WB8251 | 45-038 | LG 224 |
| WBOB264 | 72-796 | LG 1043 |
| WBU642 | 72-745 | LG 1033 |
| WJD6915 | 72-306 | LG 1038 |
| WJD6918 | 72-307 | LG 1038 |
| WJD8216 | 72-099 | LG 1040 |
| WJD8244 | 72-098 | LG 1040 |
| WLB79 | 72-500 | LG 1034 |
| WLB80 | 72-508 | LG 1034 |
| WO21 | 91-761 | LG 578 |
| WO21B | 91-547 | LG 449 |
| WO24 | 91-764 | LG 579 |
| WO6432 | 91-761 | LG 578 |
| WO6434 | 91-766 | LG 579 |
| WO6467 | 91-762 | LG 578 |
| WSC6534 | 45-031 | LG 232 |
| WSN18 | 72-728 | LG 1044 |
| WSN45 | 75-354 | LG 319 |
| WSN83 | 72-450 | LG 1037 |

## PLP

| PART No. | OREGON | Page |
|---|---|---|
| 101-012 | 30-044 | LG 179 |
| 101-026 | 30-132 | LG 179 |
| 101-028 | 30-097 | LG 179 |
| 101-030 | 30-101 | LG 179 |
| 101-032 | 30-700 | LG 180 |
| 101-034 | 30-105 | LG 179 |
| 101-036 | 30-104 | LG 180 |
| 101-038 | 30-094 | LG 180 |
| 101-044 | 30-720 | LG 180 |
| 101-046 | 30-710 | LG 181 |
| 101-050 | 30-106 | LG 179 |
| 101-052 | 30-107 | LG 180 |
| 101-071 | 30-049 | LG 181 |
| 101-082 | 30-134 | LG 180 |
| 101-242 | 30-317 | LG 194 |
| 101-250 | 30-400 | LG 193 |
| 101-258 | 30-405 | LG 193 |
| 101-264 | 30-506 | LG 195 |
| 101-266 | 30-406 | LG 193 |
| 101-270 | 30-403 | LG 192 |
| 101-280 | 30-303 | LG 198 |
| 101-283 | 30-304 | LG 199 |
| 101-287 | 30-305 | LG 198 |
| 101-291 | 30-311 | LG 199 |
| 101-300 | 30-080 | LG 205 |
| 101-305 | 30-093 | LG 206 |
| 101-308 | 30-095 | LG 206 |
| 101-310 | 30-098 | LG 206 |
| 101-314 | 30-125 | LG 206 |
| 101-322 | 30-085 | LG 203 |
| 101-376 | 30-309 | LG 199 |
| 101-500 | 30-430 | LG 211 |
| 101-600 | 30-091 | LG 217 |
| 101-604 | 30-301 | LG 217 |
| 101-700 | 30-070 | LG 216 |
| 101-702 | 30-083 | LG 219 |
| 101-705 | 30-081 | LG 205 |
| 101-707 | 30-082 | LG 205 |
| 101-715 | 30-100 | LG 217 |
| 101-727 | 30-205 | LG 219 |
| 101-728 | 30-112 | LG 218 |
| 101-731 | 30-117 | LG 219 |
| 101-733 | 30-111 | LG 217 |
| 101-737 | 30-141 | LG 217 |
| 101-739 | 30-116 | LG 219 |
| 101-801 | 30-421 | LG 220 |
| 101-950 | 30-412 | LG 220 |
| 101-952 | 30-410 | LG 220 |
| 101-966 | 30-418 | LG 221 |
| 103-010 | 02-531 | |
| 103-013 | 02-535 | |
| 103-328 | 04-721 | |
| 103-329 | 04-722 | |
| 103-330 | 04-723 | |
| 105-100 | 47-081 | LG 744 |
| 105-101 | 47-121 | LG 744 |
| 105-102 | 47-161 | LG 744 |
| 105-103 | 47-201 | LG 744 |
| 105-111 | 47-080 | LG 744 |
| 105-112 | 47-120 | LG 744 |
| 105-113 | 47-160 | LG 744 |
| 105-114 | 47-200 | LG 744 |

# 2019 Aftermarket X-Reference

## PLP

| PART No. | OREGON | Page |
|---|---|---|
| 107-001 | 45-012 | LG 224 |
| 107-002 | 45-058 | LG 232 |
| 107-003 | 45-112 | LG 241 |
| 107-004 | 45-034 | LG 224 |
| 107-006 | 45-057 | LG 249 |
| 107-009 | 45-128 | LG 228 |
| 107-033 | 45-079 | LG 249 |
| 107-041 | 48-211 | LG 233 |
| 107-046 | 45-257 | LG 245 |
| 107-087 | 45-088 | LG 240 |
| 107-088 | 45-091 | LG 249 |
| 107-089 | 45-108 | LG 894 |
| 107-092 | 45-100 | LG 239 |
| 107-093 | 45-092 | LG 854 |
| 107-094 | 45-082 | LG 854 |
| 107-098 | 45-095 | LG 855 |
| 107-105 | 45-043 | LG 243 |
| 107-171 | 45-620 | LG 225 |
| 107-201 | 45-295 | LG 232 |
| 107-202 | 45-206 | LG 231 |
| 107-203 | 45-205 | LG 228 |
| 107-204 | 45-259 | LG 224 |
| 107-207 | 45-000 | LG 237 |
| 107-207 | 45-010 | LG 238 |
| 107-208 | 45-209 | LG 246 |
| 107-210 | 45-107 | LG 245 |
| 107-510 | 48-320 | LG 238 |
| 107-511 | 45-078 | LG 230 |
| 107-535 | 45-030 | LG 245 |
| 107-535 | 45-124 | LG 938 |
| 107-601 | 45-019 | LG 239 |
| 107-630 | 45-037 | LG 242 |
| 107-650 | 82-244 | LG 910 |
| 107-652 | 45-087 | LG 243 |
| 107-750 | 45-083 | LG 246 |
| 107-751 | 45-081 | LG 249 |
| 107-830 | 45-080 | LG 249 |
| 108-406 | 75-406 | LG 335 |
| 108-407 | 75-407 | LG 335 |
| 108-409 | 75-409 | LG 335 |
| 108-410 | 75-410 | LG 335 |
| 108-411 | 75-411 | LG 335 |
| 108-413 | 75-413 | LG 335 |
| 108-414 | 75-414 | LG 335 |
| 108-503 | 75-503 | LG 256 |
| 109-006 | 75-320 | LG 334 |
| 109-008 | 75-321 | LG 334 |
| 109-009 | 75-322 | LG 334 |
| 109-010 | 75-323 | LG 334 |
| 109-011 | 75-324 | LG 334 |
| 109-012 | 75-325 | LG 334 |
| 109-014 | 75-326 | LG 334 |
| 109-015 | 75-327 | LG 334 |
| 109-017 | 75-328 | LG 334 |
| 109-019 | 75-329 | LG 334 |
| 109-020 | 75-330 | LG 334 |
| 109-021 | 75-331 | LG 334 |
| 109-022 | 75-332 | LG 334 |
| 109-023 | 75-333 | LG 334 |
| 109-024 | 75-334 | LG 334 |
| 109-025 | 75-335 | LG 334 |
| 109-026 | 75-336 | LG 334 |
| 109-027 | 75-337 | LG 334 |
| 109-028 | 75-338 | LG 334 |
| 109-029 | 75-339 | LG 334 |
| 109-030 | 75-340 | LG 334 |
| 109-031 | 75-341 | LG 334 |
| 109-033 | 75-342 | LG 334 |
| 109-034 | 75-343 | LG 334 |
| 109-035 | 75-344 | LG 334 |
| 109-036 | 75-345 | LG 334 |
| 109-037 | 75-346 | LG 334 |
| 109-039 | 75-348 | LG 334 |
| 109-040 | 75-349 | LG 334 |
| 109-041 | 75-350 | LG 334 |
| 109-061 | 75-400 | LG 335 |
| 109-065 | 75-120 | LG 300 |
| 109-066 | 75-420 | LG 334 |
| 109-068 | 75-421 | LG 334 |
| 109-070 | 75-422 | LG 334 |
| 109-071 | 75-423 | LG 334 |
| 109-072 | 75-424 | LG 334 |
| 109-074 | 75-425 | LG 334 |
| 109-075 | 75-426 | LG 334 |
| 109-076 | 75-427 | LG 334 |
| 109-077 | 75-010 | LG 311 |
| 109-077 | 75-428 | LG 334 |
| 109-079 | 75-429 | LG 334 |
| 109-081 | 75-101 | LG 269 |
| 109-083 | 75-431 | LG 334 |
| 109-085 | 75-432 | LG 334 |
| 109-087 | 75-433 | LG 334 |
| 109-089 | 75-434 | LG 334 |
| 109-091 | 75-435 | LG 334 |
| 109-092 | 75-436 | LG 334 |
| 109-093 | 75-437 | LG 334 |
| 109-094 | 75-438 | LG 334 |
| 109-095 | 75-439 | LG 334 |
| 109-096 | 75-440 | LG 334 |
| 109-097 | 75-441 | LG 334 |
| 109-099 | 75-442 | LG 334 |
| 109-101 | 75-443 | LG 334 |
| 109-102 | 75-444 | LG 334 |
| 109-103 | 75-445 | LG 334 |
| 109-104 | 75-446 | LG 334 |
| 109-105 | 75-447 | LG 334 |
| 109-106 | 75-448 | LG 334 |
| 109-107 | 75-449 | LG 334 |
| 109-108 | 75-450 | LG 334 |
| 109-109 | 75-451 | LG 334 |
| 109-110 | 75-452 | LG 334 |
| 109-111 | 75-453 | LG 334 |
| 109-112 | 75-454 | LG 334 |
| 109-114 | 75-455 | LG 334 |
| 109-116 | 75-456 | LG 334 |
| 109-117 | 75-457 | LG 334 |
| 109-118 | 75-458 | LG 334 |
| 109-119 | 75-459 | LG 334 |
| 109-120 | 75-460 | LG 334 |
| 109-121 | 75-461 | LG 334 |
| 109-122 | 75-462 | LG 334 |
| 109-123 | 75-463 | LG 334 |
| 109-124 | 75-464 | LG 334 |
| 109-125 | 75-465 | LG 334 |
| 109-126 | 75-466 | LG 334 |
| 109-127 | 75-467 | LG 334 |
| 109-128 | 75-468 | LG 334 |
| 109-129 | 75-469 | LG 335 |
| 109-130 | 75-470 | LG 335 |
| 109-131 | 75-471 | LG 335 |
| 109-132 | 75-472 | LG 335 |
| 109-133 | 75-473 | LG 335 |
| 109-134 | 75-474 | LG 335 |
| 109-135 | 75-475 | LG 335 |
| 109-136 | 75-476 | LG 335 |
| 109-137 | 75-477 | LG 335 |
| 109-138 | 75-478 | LG 335 |
| 109-139 | 75-479 | LG 335 |
| 109-140 | 75-480 | LG 335 |
| 109-141 | 75-481 | LG 335 |
| 109-142 | 75-482 | LG 335 |
| 109-143 | 75-483 | LG 335 |
| 109-144 | 75-484 | LG 335 |
| 109-145 | 75-485 | LG 335 |
| 109-146 | 75-486 | LG 335 |
| 109-147 | 75-487 | LG 335 |
| 109-148 | 75-488 | LG 335 |
| 109-149 | 75-489 | LG 335 |
| 109-150 | 75-490 | LG 335 |
| 109-151 | 75-491 | LG 335 |
| 109-152 | 75-492 | LG 335 |
| 109-153 | 75-493 | LG 335 |
| 109-154 | 75-494 | LG 335 |
| 109-155 | 75-495 | LG 335 |
| 109-156 | 75-496 | LG 335 |
| 109-157 | 75-497 | LG 335 |
| 109-158 | 75-498 | LG 335 |
| 109-159 | 75-499 | LG 335 |
| 109-160 | 75-500 | LG 335 |
| 109-163 | 75-525 | LG 334 |
| 109-165 | 75-527 | LG 334 |
| 109-166 | 75-528 | LG 334 |
| 109-167 | 75-529 | LG 334 |
| 109-168 | 75-530 | LG 334 |
| 109-169 | 75-531 | LG 334 |
| 109-170 | 75-532 | LG 334 |
| 109-171 | 75-533 | LG 334 |
| 109-172 | 75-534 | LG 334 |
| 109-173 | 75-535 | LG 334 |
| 109-174 | 75-536 | LG 334 |
| 109-175 | 75-537 | LG 334 |
| 109-176 | 75-538 | LG 334 |
| 109-177 | 75-539 | LG 334 |
| 109-178 | 75-540 | LG 334 |
| 109-179 | 75-541 | LG 334 |
| 109-180 | 75-542 | LG 334 |
| 109-181 | 75-543 | LG 334 |
| 109-182 | 75-544 | LG 334 |
| 109-183 | 75-545 | LG 334 |
| 109-184 | 75-546 | LG 334 |
| 109-185 | 75-547 | LG 334 |
| 109-186 | 75-548 | LG 334 |
| 109-187 | 75-549 | LG 334 |
| 109-188 | 75-550 | LG 334 |
| 109-189 | 75-551 | LG 334 |
| 109-190 | 75-552 | LG 334 |
| 109-191 | 75-553 | LG 334 |
| 109-192 | 75-554 | LG 334 |
| 109-193 | 75-555 | LG 334 |
| 109-194 | 75-556 | LG 334 |
| 109-195 | 75-557 | LG 334 |
| 109-196 | 75-558 | LG 253 |
| 109-197 | 75-559 | LG 334 |
| 109-198 | 75-560 | LG 334 |
| 109-199 | 75-561 | LG 334 |
| 109-200 | 75-562 | LG 334 |
| 109-201 | 75-563 | LG 253 |
| 109-202 | 75-564 | LG 334 |
| 109-203 | 75-565 | LG 253 |
| 109-204 | 75-566 | LG 334 |
| 109-205 | 75-567 | LG 334 |
| 109-206 | 75-568 | LG 334 |
| 109-207 | 75-569 | LG 335 |
| 109-208 | 75-570 | LG 335 |
| 109-209 | 75-571 | LG 335 |
| 109-210 | 75-572 | LG 335 |
| 109-211 | 75-573 | LG 335 |
| 109-212 | 75-574 | LG 335 |
| 109-213 | 75-575 | LG 335 |
| 109-214 | 75-576 | LG 335 |
| 109-215 | 75-577 | LG 335 |
| 109-216 | 75-578 | LG 335 |
| 109-217 | 75-579 | LG 335 |
| 109-218 | 75-580 | LG 335 |
| 109-219 | 75-581 | LG 335 |
| 109-220 | 75-582 | LG 254 |
| 109-221 | 75-583 | LG 335 |
| 109-222 | 75-584 | LG 335 |
| 109-223 | 75-585 | LG 335 |
| 109-224 | 75-586 | LG 335 |
| 109-225 | 75-587 | LG 335 |
| 109-226 | 75-588 | LG 335 |
| 109-227 | 75-589 | LG 335 |
| 109-228 | 75-590 | LG 335 |
| 109-229 | 75-591 | LG 335 |
| 109-230 | 75-592 | LG 335 |
| 109-231 | 75-593 | LG 335 |
| 109-232 | 75-594 | LG 335 |
| 109-233 | 75-595 | LG 335 |
| 109-234 | 75-596 | LG 335 |
| 109-235 | 75-597 | LG 335 |
| 109-236 | 75-598 | LG 335 |
| 109-237 | 75-599 | LG 335 |
| 109-301 | 75-179 | LG 310 |
| 109-309 | 75-168 | LG 310 |
| 109-325 | 75-171 | LG 289 |
| 109-350 | 75-098 | LG 251 |
| 109-352 | 75-240 | LG 297 |
| 109-355 | 75-072 | LG 268 |
| 109-360 | 75-212 | LG 268 |
| 109-366 | 75-222 | LG 252 |
| 109-367 | 75-221 | LG 280 |
| 109-368 | 75-223 | LG 269 |
| 109-386 | 75-031 | LG 278 |
| 109-403 | 75-402 | LG 335 |
| 109-596 | 75-122 | LG 307 |
| 109-600 | 75-005 | LG 307 |
| 109-601 | 75-112 | LG 306 |
| 109-602 | 75-111 | LG 306 |
| 109-605 | 75-045 | LG 307 |
| 109-607 | 75-022 | LG 307 |
| 109-608 | 75-026 | LG 307 |
| 109-609 | 75-040 | LG 306 |
| 109-611 | 75-063 | LG 307 |

## PLP

| PART No. | OREGON | Page |
|---|---|---|
| 109-612 | 75-041 | LG 255 |
| 109-617 | 75-061 | LG 307 |
| 109-622 | 75-151 | LG 308 |
| 109-624 | 75-152 | LG 308 |
| 109-628 | 75-145 | LG 300 |
| 109-629 | 75-002 | LG 301 |
| 109-630 | 75-281 | LG 301 |
| 109-631 | 75-018 | LG 301 |
| 109-633 | 75-119 | LG 302 |
| 109-634 | 75-028 | LG 302 |
| 109-635 | 75-027 | LG 302 |
| 109-647 | 75-136 | LG 309 |
| 109-660 | 75-106 | LG 261 |
| 109-676 | 75-115 | LG 260 |
| 109-685 | 75-260 | LG 312 |
| 109-686 | 75-054 | LG 312 |
| 109-687 | 75-036 | LG 297 |
| 109-691 | 75-154 | LG 312 |
| 109-692 | 75-043 | LG 312 |
| 109-700 | 75-068 | LG 318 |
| 109-701 | 75-073 | LG 319 |
| 109-704 | 75-354 | LG 319 |
| 109-705 | 75-105 | LG 319 |
| 109-706 | 75-508 | LG 319 |
| 109-707 | 75-353 | LG 319 |
| 109-800 | 75-075 | LG 322 |
| 109-806 | 75-165 | LG 322 |
| 109-809 | 75-205 | LG 322 |
| 109-902 | 75-631 | LG 314 |
| 109-903 | 75-632 | LG 314 |
| 109-905 | 75-634 | LG 314 |
| 109-906 | 75-635 | LG 314 |
| 109-908 | 75-637 | LG 253 |
| 109-911 | 75-642 | LG 314 |
| 109-913 | 75-724 | LG 310 |
| 109-942 | 75-755 | LG 258 |
| 109-943 | 75-756 | LG 279 |
| 109-944 | 75-759 | LG 279 |
| 109-986 | 75-099 | LG 262 |
| 111-351 | 80-122 | LG 340 |
| 111-554 | 65-220 | LG 340 |
| 111-556 | 65-221 | LG 341 |
| 111-600 | 65-206 | LG 342 |
| 111-611 | 65-208 | LG 342 |
| 111-752 | 65-229 | LG 342 |
| 111-775 | 79-724 | LG 556 |
| 111-776 | 79-728 | LG 556 |
| 112-001 | 40-110 | LG 584 |
| 112-019 | 40-502 | LG 586 |
| 112-025 | 40-402 | LG 589 |
| 112-039 | 40-408 | LG 589 |
| 112-051 | 40-411 | LG 589 |
| 112-106 | 40-519 | LG 584 |
| 112-110 | 40-130 | LG 586 |
| 112-118 | 40-403 | LG 589 |
| 112-124 | 40-409 | LG 585 |
| 112-142 | 40-518 | LG 589 |
| 112-154 | 40-503 | LG 589 |
| 112-312 | 40-316 | LG 586 |
| 112-356 | 40-121 | LG 584 |
| 112-359 | 40-141 | LG 585 |
| 112-450 | 40-807 | LG 585 |
| 113-064 | 90-142 | LG 368 |
| 113-066 | 90-143 | LG 368 |
| 113-068 | 90-144 | LG 368 |
| 113-070 | 90-145 | LG 368 |
| 113-072 | 90-146 | LG 368 |
| 113-176 | 90-620 | LG 368 |
| 113-178 | 90-621 | LG 368 |
| 113-180 | 90-622 | LG 368 |
| 113-182 | 90-619 | LG 368 |
| 114-074 | 95-006 | LG 397 |
| 114-080 | 91-005 | LG 458 |
| 114-084 | 91-003 | LG 370 |
| 114-130 | 91-096 | LG 389 |
| 114-142 | 93-005 | LG 447 |
| 114-144 | 91-184 | LG 421 |
| 114-146 | 93-008 | LG 510 |
| 114-148 | 93-025 | LG 482 |
| 114-152 | 91-180 | LG 460 |
| 114-154 | 91-181 | LG 495 |
| 114-156 | 93-009 | LG 476 |
| 114-158 | 93-010 | LG 432 |
| 114-160 | 93-011 | LG 557 |
| 114-174 | 91-256 | LG 437 |
| 114-210 | 91-502 | LG 477 |
| 114-212 | 91-501 | LG 413 |
| 114-240 | 96-005 | |
| 114-290 | 91-183 | LG 370 |
| 114-302 | 95-036 | LG 463 |
| 114-304 | 195-033 | LG 400 |
| 114-306 | 195-032 | LG 425 |
| 114-408 | 91-547 | LG 449 |
| 114-420 | 91-242 | LG 371 |
| 114-438 | 91-255 | LG 454 |
| 114-476 | 91-291 | LG 457 |
| 114-532 | 91-352 | LG 482 |
| 114-546 | 91-342 | LG 447 |
| 114-582 | 91-389 | LG 538 |
| 114-586 | 91-398 | LG 488 |
| 114-588 | 91-391 | LG 489 |
| 114-600 | 191-392 | LG 488 |
| 114-602 | 91-393 | LG 485 |
| 114-630 | 91-430 | LG 497 |
| 114-664 | 92-011 | LG 490 |
| 114-722 | 98-496 | LG 515 |
| 114-724 | 98-499 | LG 519 |
| 114-726 | 98-037 | LG 574 |
| 114-732 | 98-019 | LG 516 |
| 114-758 | 98-044 | LG 409 |
| 114-758 | 98-493 | LG 409 |
| 114-765 | 98-001 | LG 517 |
| 114-771 | 98-486 | LG 512 |
| 114-773 | 98-487 | LG 513 |
| 114-784 | 97-110 | LG 525 |
| 114-792 | 97-105 | LG 523 |
| 114-803 | 97-107 | LG 524 |
| 114-805 | 97-109 | LG 525 |
| 114-817 | 97-330 | LG 528 |
| 114-827 | 97-105 | LG 523 |
| 114-860 | 95-024 | LG 465 |
| 114-862 | 95-023 | LG 380 |
| 114-868 | 95-011 | |
| 114-874 | 95-014 | LG 374 |
| 114-876 | 95-015 | LG 400 |
| 114-902 | 91-626 | LG 552 |
| 114-904 | 91-620 | LG 470 |
| 114-906 | 91-621 | LG 563 |
| 114-910 | 91-622 | LG 536 |
| 114-912 | 91-623 | LG 485 |
| 114-916 | 91-627 | LG 482 |
| 114-938 | 91-713 | LG 422 |
| 114-952 | 91-761 | LG 578 |
| 115-004 | 99-103 | LG 551 |
| 115-012 | 99-113 | LG 528 |
| 115-014 | 99-112 | LG 556 |
| 115-016 | 99-117 | LG 556 |
| 115-019 | 99-107 | LG 551 |
| 115-021 | 99-121 | LG 551 |
| 115-092 | 94-017 | LG 441 |
| 115-094 | 94-011 | LG 572 |
| 115-095 | 94-021 | LG 573 |
| 115-101 | 94-770 | LG 569 |
| 115-103 | 94-018 | LG 565 |
| 115-105 | 94-026 | LG 369 |
| 115-107 | 94-022 | LG 565 |
| 115-109 | 94-038 | LG 568 |
| 115-111 | 94-039 | LG 561 |
| 115-152 | 91-805 | LG 560 |
| 115-154 | 91-804 | LG 560 |
| 115-158 | 91-806 | LG 447 |
| 116-004 | 49-004 | LG 622 |
| 116-006 | 49-003 | LG 622 |
| 116-008 | 49-006 | LG 622 |
| 116-009 | 49-005 | LG 622 |
| 116-012 | 53-001 | LG 623 |
| 116-018 | 49-008 | LG 623 |
| 116-027 | 49-007 | LG 622 |
| 116-031 | 49-101 | LG 602 |
| 116-034 | 49-693 | LG 602 |
| 116-037 | 49-071 | LG 602 |
| 116-038 | 49-102 | LG 602 |
| 116-039 | 49-989 | LG 602 |
| 116-051 | 49-077 | LG 628 |
| 116-056 | 49-033 | LG 628 |
| 116-074 | 49-038 | LG 628 |
| 116-095 | 07-010 | LG 764 |
| 116-150 | 49-401 | LG 605 |
| 116-200 | 49-301 | LG 606 |
| 116-220 | 49-035 | LG 629 |
| 116-400 | 49-002 | LG 623 |
| 116-421 | 49-201 | LG 608 |
| 116-423 | 49-840 | LG 609 |
| 116-424 | 49-029 | LG 609 |
| 116-425 | 49-978 | LG 609 |
| 116-440 | 49-025 | LG 629 |
| 116-442 | 49-039 | LG 629 |
| 116-900 | 49-812 | LG 612 |
| 120-042 | 57-005 | LG 677 |
| 120-043 | 57-002 | LG 677 |
| 120-100 | 33-207 | LG 949 |
| 120-485 | 83-013 | LG 817 |
| 122-100 | 07-008 | LG 762 |
| 122-105 | 55-211 | LG 191 |
| 122-250 | 07-204 | LG 778 |
| 122-251 | 07-200 | LG 778 |
| 122-270 | 07-009 | LG 762 |
| 122-275 | 55-212 | LG 209 |
| 122-277 | 55-218 | LG 209 |
| 122-312 | 55-226 | LG 212 |
| 122-350 | 07-205 | LG 779 |
| 122-351 | 55-241 | LG 214 |
| 122-353 | 55-240 | LG 214 |
| 122-357 | 55-236 | LG 213 |
| 122-367 | 55-242 | LG 214 |
| 122-400 | 49-801 | LG 610 |
| 122-401 | 49-802 | LG 610 |
| 122-402 | 49-803 | LG 610 |
| 122-403 | 49-804 | LG 610 |
| 122-404 | 49-805 | LG 609 |
| 122-420 | 49-021 | LG 629 |
| 122-450 | 07-207 | LG 779 |
| 122-451 | 07-206 | LG 776 |
| 122-452 | 07-201 | LG 779 |
| 122-600 | 49-829 | LG 605 |
| 122-800 | 49-810 | LG 612 |
| 122-803 | 49-809 | LG 613 |
| 122-808 | 49-814 | LG 614 |
| 122-809 | 49-807 | LG 611 |
| 122-811 | 49-806 | LG 611 |
| 123-130 | 43-540 | LG 936 |
| 123-134 | 43-562 | LG 936 |
| 123-302 | 43-694 | LG 936 |
| 123-307 | 43-699 | LG 936 |
| 127-001 | 36-100 | LG 750 |
| 127-002 | 36-101 | LG 750 |
| 127-003 | 36-102 | LG 750 |
| 127-004 | 36-103 | LG 750 |
| 127-005 | 36-104 | LG 750 |
| 128-176 | 43-075 | |
| 128-307 | 82-306 | LG 874 |
| 128-311 | 82-308 | LG 874 |
| 128-315 | 48-080 | |
| 128-321 | 48-200 | LG 694 |
| 128-323 | 48-205 | LG 694 |
| 128-340 | 09-802 | LG 233 |
| 128-341 | 09-808 | LG 697 |
| 128-342 | 09-801 | LG 229 |
| 128-344 | 09-804 | LG 233 |
| 128-363 | 48-145 | LG 698 |
| 128-451 | 82-305 | LG 908 |
| 128-492 | 48-202 | LG 694 |
| 129-455 | 46-310 | LG 713 |
| 129-511 | 46-300 | LG 717 |
| 129-651 | 46-024 | LG 719 |
| 133-702 | 76-002 | LG 726 |
| 133-706 | 41-005 | LG 728 |
| 133-708 | 49-018 | LG 728 |
| 133-711 | 51-000 | LG 727 |
| 133-712 | 51-222 | LG 727 |
| 133-750 | 76-110 | LG 726 |
| 135-002 | 02-402 | LG 790 |
| 135-002 | 02-407 | LG 790 |
| 135-503 | 02-404 | LG 790 |
| 137-020 | 07-153 | LG 761 |
| 137-021 | 07-151 | LG 761 |
| 137-022 | 07-152 | LG 761 |
| 137-023 | 07-150 | LG 761 |
| 137-030 | 07-016 | LG 762 |
| 137-050 | 07-102 | LG 774 |
| 137-054 | 07-101 | LG 775 |
| 137-056 | 07-103 | LG 775 |
| 137-057 | 07-100 | LG 774 |
| 137-072 | 02-040 | LG 765 |

# 2019 Aftermarket X-Reference

| PART No. | OREGON | Page |
|---|---|---|
| **PLP** | | |
| 137-073 | 02-041 | LG 765 |
| 137-080 | 07-001 | LG 765 |
| 137-100 | 02-861 | LG 766 |
| 137-101 | 02-860 | LG 766 |
| 137-102 | 07-400 | LG 767 |
| 137-104 | 07-406 | LG 767 |
| 137-107 | 07-408 | LG 766 |
| 137-109 | 07-390 | LG 766 |
| 137-110 | 07-391 | LG 766 |
| 137-114 | 07-392 | LG 767 |
| 139-003 | 07-303 | LG 770 |
| 139-005 | 07-304 | LG 770 |
| 139-006 | 07-307 | LG 770 |
| 139-042 | 55-120 | LG 770 |
| 139-504 | 07-308 | LG 772 |
| 139-520 | 55-106 | LG 773 |
| 141-013 | 50-412 | LG 745 |
| 141-020 | 50-544 | LG 747 |
| 141-036 | 50-027 | LG 747 |
| 141-040 | 50-542 | LG 747 |
| 141-070 | 49-355 | LG 746 |
| 141-084 | 49-111 | LG 748 |
| 141-097 | 49-031 | LG 746 |
| 141-118 | 49-099 | LG 748 |
| 141-120 | 49-109 | LG 748 |
| 141-140 | 49-160 | LG 747 |
| 141-160 | 49-119 | LG 746 |
| 141-164 | 49-127 | LG 746 |
| 141-165 | 49-095 | LG 746 |
| 141-184 | 50-101 | LG 746 |
| 141-200 | 49-110 | LG 746 |
| 141-204 | 49-115 | LG 746 |
| 141-210 | 49-107 | LG 749 |
| 141-212 | 49-112 | LG 749 |
| 141-214 | 49-100 | LG 749 |
| 141-230 | 49-128 | LG 747 |
| 141-232 | 49-131 | LG 745 |
| 141-247 | 50-543 | LG 748 |
| 141-418 | 50-041 | LG 757 |
| 141-688 | 50-502 | LG 756 |
| 142-001 | 50-407 | LG 758 |
| 142-020 | 50-032 | LG 759 |
| 142-036 | 50-548 | LG 759 |
| 142-038 | 50-033 | LG 759 |
| 142-060 | 49-153 | LG 758 |
| 142-062 | 49-411 | LG 759 |
| 142-070 | 49-157 | LG 759 |
| 142-100 | 49-402 | LG 758 |
| 142-104 | 49-150 | LG 758 |
| 142-116 | 49-403 | LG 758 |
| 142-122 | 49-841 | LG 626 |
| 142-150 | 50-204 | LG 758 |
| 142-156 | 50-206 | LG 758 |
| 142-180 | 49-120 | LG 759 |
| 142-811 | 49-331 | LG 604 |
| 143-015 | 49-083 | LG 913 |
| 145-100 | 86-001 | LG 781 |
| 145-105 | 86-009 | LG 781 |
| 145-301 | 86-005 | LG 782 |
| 145-302 | 86-008 | LG 782 |
| 145-303 | 86-010 | LG 782 |
| 147-020 | 33-053 | LG 789 |
| 147-070 | 33-362 | LG 784 |
| 147-070 | 33-363 | LG 787 |
| 147-071 | 33-365 | LG 784 |
| 147-073 | 33-344 | LG 784 |
| 147-074 | 33-342 | LG 784 |
| 147-076 | 33-340 | LG 784 |
| 147-150 | 33-334 | LG 730 |
| 147-250 | 33-389 | LG 945 |
| 147-331 | 33-333 | LG 786 |
| 147-430 | 33-330 | LG 729 |
| 147-435 | 33-240 | LG 948 |
| 147-450 | 33-386 | LG 942 |
| 147-455 | 33-335 | LG 730 |
| 147-456 | 33-396 | LG 944 |
| 147-551 | 33-390 | |
| 147-553 | 33-391 | LG 945 |
| 147-555 | 33-387 | LG 945 |
| 147-600 | 33-186 | LG 789 |
| 147-800 | 42-008 | LG 945 |
| 147-801 | 42-009 | LG 945 |
| 147-804 | 33-201 | LG 867 |
| 147-806 | 33-038 | LG 742 |
| 147-810 | 33-385 | LG 942 |
| 151-003 | 60-065 | LG 722 |
| 151-020 | 60-048 | LG 722 |
| 151-022 | 60-060 | LG 722 |
| 151-023 | 60-092 | LG 722 |
| 151-030 | 84-001 | LG 675 |
| 151-031 | 84-007 | LG 675 |
| 151-032 | 84-004 | LG 675 |
| 151-033 | 84-002 | LG 675 |
| 151-034 | 84-006 | LG 675 |
| 151-043 | 45-634 | LG 675 |
| 151-084 | 84-005 | LG 675 |
| 153-022 | 73-560 | LG 844 |
| 153-026 | 80-036 | LG 727 |
| 153-027 | 80-014 | LG 727 |
| 153-030 | 80-037 | LG 727 |
| 153-040 | 42-550 | |
| 153-041 | 42-551 | |
| 153-043 | 42-552 | |
| 157-050 | 35-007 | LG 806 |
| 157-051 | 35-005 | LG 806 |
| 157-052 | 35-004 | LG 806 |
| 157-053 | 35-002 | LG 806 |
| 157-055 | 35-014 | LG 806 |
| 157-058 | 35-012 | LG 806 |
| 157-059 | 35-010 | LG 809 |
| 157-064 | 35-022 | LG 807 |
| 157-065 | 35-027 | LG 807 |
| 157-070 | 35-001 | LG 806 |
| 157-073 | 35-023 | LG 806 |
| 157-210 | 35-543 | LG 807 |
| 157-301 | 35-008 | LG 808 |
| 157-302 | 35-006 | LG 808 |
| 157-400 | 35-021 | LG 810 |
| 157-500 | 35-016 | LG 809 |
| 157-700 | 35-003 | LG 809 |
| 157-702 | 35-028 | LG 810 |
| 157-703 | 35-015 | LG 810 |
| 159-012 | 49-667 | LG 750 |
| 159-013 | 45-110 | LG 245 |
| 159-350 | 83-028 | LG 817 |
| 159-360 | 83-282 | LG 817 |
| 159-451 | 83-283 | LG 818 |
| 159-900 | 83-300 | LG 819 |
| 161-052 | 49-045 | LG 749 |
| 161-055 | 49-047 | LG 749 |
| 161-551 | 49-050 | LG 954 |
| 161-552 | 49-051 | LG 954 |
| 163-057 | 36-022 | LG 750 |
| 163-072 | 36-001 | |
| 163-077 | 36-005 | LG 750 |
| 165-001 | 34-001 | LG 821 |
| 165-003 | 34-002 | LG 821 |
| 165-004 | 34-005 | LG 821 |
| 165-005 | 34-009 | LG 821 |
| 165-005 | 34-010 | LG 831 |
| 165-006 | 34-012 | LG 821 |
| 165-007 | 34-015 | LG 821 |
| 165-008 | 34-017 | LG 821 |
| 165-009 | 34-018 | LG 821 |
| 165-010 | 34-019 | LG 821 |
| 165-011 | 34-020 | LG 821 |
| 165-012 | 34-022 | LG 822 |
| 165-013 | 34-023 | LG 822 |
| 165-014 | 34-024 | LG 822 |
| 165-015 | 34-006 | LG 821 |
| 165-100 | 34-030 | LG 821 |
| 165-101 | 34-031 | LG 821 |
| 165-102 | 34-033 | LG 821 |
| 165-103 | 34-035 | LG 821 |
| 165-104 | 34-034 | LG 821 |
| 165-105 | 34-037 | LG 821 |
| 165-106 | 34-038 | LG 821 |
| 165-107 | 34-042 | LG 823 |
| 165-108 | 34-043 | LG 823 |
| 165-126 | 44-301 | LG 840 |
| 165-128 | 44-306 | LG 840 |
| 165-131 | 44-310 | LG 840 |
| 165-133 | 44-312 | LG 840 |
| 165-134 | 44-313 | LG 840 |
| 165-137 | 44-316 | LG 840 |
| 165-138 | 44-318 | LG 840 |
| 165-139 | 44-319 | LG 840 |
| 165-140 | 44-321 | LG 840 |
| 165-141 | 44-322 | LG 840 |
| 165-146 | 44-353 | LG 840 |
| 165-201 | 34-810 | LG 725 |
| 165-210 | 34-044 | LG 821 |
| 165-210 | 78-000 | LG 823 |
| 165-211 | 34-013 | LG 824 |
| 165-211 | 34-014 | LG 831 |
| 165-212 | 34-011 | LG 821 |
| 165-218 | 34-007 | LG 826 |
| 165-223 | 78-640 | LG 835 |
| 165-224 | 78-641 | LG 835 |
| 165-225 | 78-643 | LG 835 |
| 165-226 | 78-031 | LG 826 |
| 165-230 | 34-029 | LG 821 |
| 165-242 | 78-646 | LG 841 |
| 165-290 | 34-028 | LG 821 |
| 165-304 | 44-366 | LG 837 |
| 165-352 | 44-323 | LG 838 |
| 165-353 | 34-004 | LG 832 |
| 165-356 | 44-332 | LG 838 |
| 165-359 | 34-824 | LG 832 |
| 165-360 | 44-356 | LG 839 |
| 165-361 | 44-340 | LG 838 |
| 165-364 | 34-822 | LG 832 |
| 165-450 | 34-003 | LG 821 |
| 165-491 | 78-673 | LG 839 |
| 165-500 | 44-347 | LG 840 |
| 165-512 | 78-690 | LG 840 |
| 165-513 | 78-110 | LG 833 |
| 165-525 | 34-008 | LG 821 |
| 165-900 | 34-036 | LG 821 |
| 167-001 | 32-101 | LG 676 |
| 167-002 | 32-103 | LG 676 |
| 167-003 | 32-105 | LG 676 |
| 167-004 | 32-107 | LG 676 |
| 167-005 | 32-108 | LG 676 |
| 167-006 | 32-111 | LG 676 |
| 167-007 | 32-110 | LG 676 |
| 167-009 | 32-112 | LG 676 |
| 167-010 | 32-114 | LG 676 |
| 167-011 | 32-116 | LG 676 |
| 167-050 | 02-188 | LG 676 |
| 167-051 | 02-190 | LG 676 |
| 167-052 | 02-191 | LG 676 |
| 167-053 | 02-192 | LG 676 |
| 167-054 | 02-193 | LG 676 |
| 167-056 | 02-194 | LG 676 |
| 167-057 | 02-195 | LG 676 |
| 167-058 | 02-196 | LG 676 |
| 167-100 | 02-176 | LG 676 |
| 167-101 | 02-177 | LG 676 |
| 167-102 | 02-178 | LG 676 |
| 167-103 | 02-179 | LG 676 |
| 167-104 | 02-181 | LG 676 |
| 167-106 | 02-180 | LG 676 |
| 167-107 | 02-182 | LG 676 |
| 167-108 | 02-184 | LG 676 |
| 172-002 | 31-907 | LG 929 |
| 172-050 | 80-740 | LG 852 |
| 172-051 | 80-741 | LG 852 |
| 172-052 | 80-742 | LG 852 |
| 172-054 | 80-743 | LG 852 |
| 172-056 | 80-746 | LG 852 |
| 172-059 | 80-747 | LG 852 |
| 172-065 | 73-028 | LG 850 |
| 172-065 | 73-100 | LG 850 |
| 172-067 | 73-020 | LG 850 |
| 172-076 | 73-001 | LG 847 |
| 172-078 | 73-003 | LG 847 |
| 172-083 | 73-006 | LG 846 |
| 172-103 | 73-008 | LG 848 |
| 172-104 | 73-013 | LG 849 |
| 172-105 | 73-014 | LG 849 |
| 174-150 | 33-210 | LG 867 |
| 174-153 | 33-208 | LG 866 |
| 176-040 | 31-232 | LG 937 |
| 176-041 | 31-240 | LG 937 |
| 176-042 | 31-242 | LG 937 |
| 176-043 | 31-250 | LG 937 |
| 176-044 | 31-252 | LG 937 |
| 176-045 | 31-260 | LG 937 |
| 176-107 | 31-908 | LG 929 |
| 176-109 | 31-904 | LG 930 |
| 176-113 | 31-100 | LG 929 |
| 178-100 | 43-404 | LG 928 |
| 178-110 | 43-011 | LG 935 |

X

## PLP

| PART No. | OREGON | Page |
|---|---|---|
| 178-111 | 43-012 | LG 927 |
| 178-114 | 33-005 | LG 927 |
| 178-116 | 43-014 | LG 932 |
| 178-120 | 43-100 | LG 932 |
| 178-121 | 43-200 | LG 932 |
| 178-304 | 55-800 | LG 934 |
| 178-630 | 31-051 | LG 924 |
| 180-002 | 02-115 | LG 723 |
| 180-006 | 02-107 | LG 723 |
| 180-008 | 02-098 | LG 722 |
| 180-010 | 02-099 | LG 722 |
| 180-012 | 02-108 | LG 723 |
| 180-018 | 60-004 | LG 701 |
| 180-052 | 74-054 | LG 721 |
| 180-053 | 74-072 | LG 721 |
| 180-071 | 74-732 | LG 721 |
| 180-100 | 60-209 | LG 700 |
| 180-101 | 60-860 | LG 701 |
| 180-102 | 60-160 | LG 701 |
| 180-103 | 60-408 | LG 700 |
| 180-107 | 60-400 | LG 700 |
| 180-127 | 60-426 | LG 699 |
| 180-128 | 60-046 | LG 700 |
| 180-303 | 46-323 | LG 712 |
| 180-349 | 60-420 | LG 717 |
| 180-353 | 60-522 | LG 715 |
| 180-501 | 60-353 | LG 719 |
| 180-503 | 60-991 | LG 718 |
| 180-504 | 60-061 | LG 718 |
| 180-505 | 60-188 | LG 718 |
| 180-509 | 60-786 | LG 719 |
| 180-511 | 60-240 | LG 719 |
| 184-011 | 72-804 | LG 1047 |
| 184-501 | 71-800 | LG 956 |
| 184-502 | 71-816 | LG 956 |
| 184-503 | 71-400 | LG 956 |
| 184-504 | 71-277 | LG 956 |
| 184-505 | 71-600 | LG 956 |
| 184-506 | 71-280 | LG 956 |
| 184-507 | 71-102 | LG 956 |
| 184-508 | 71-104 | LG 956 |
| 184-509 | 71-108 | LG 957 |
| 184-510 | 71-107 | LG 957 |
| 184-511 | 71-105 | LG 957 |
| 184-512 | 71-511 | LG 956 |
| 184-518 | 71-274 | LG 956 |
| 184-521 | 71-106 | LG 957 |
| 184-522 | 71-101 | LG 956 |
| 184-551 | 71-002 | LG 957 |
| 184-552 | 71-001 | LG 957 |
| 184-901 | 71-109 | LG 956 |
| 184-903 | 71-610 | LG 956 |
| 184-905 | 71-250 | LG 956 |
| 184-908 | 71-500 | |
| 184-909 | 71-275 | LG 956 |
| 186-082 | 42-061 | LG 1018 |
| 186-143 | 42-452 | LG 867 |
| 186-178 | 42-455 | LG 721 |
| 190-040 | 55-252 | LG 1019 |
| 190-201 | 55-803 | LG 1022 |
| 190-289 | 55-109 | LG 773 |
| 190-293 | 55-102 | LG 773 |
| 190-705 | 07-011 | LG 763 |
| 190-900 | 49-816 | LG 612 |
| 190-942 | 07-214 | LG 779 |
| 190-982 | 55-822 | LG 1027 |
| 191-146 | 49-123 | LG 746 |
| 192-013 | 82-220 | LG 871 |
| 192-015 | 85-017 | LG 907 |
| 192-100 | 82-493 | LG 869 |
| 192-125 | 82-514 | LG 869 |
| 192-160 | 82-013 | LG 891 |
| 192-249 | 84-010 | LG 913 |
| 192-255 | 45-114 | LG 938 |
| 192-256 | 45-103 | LG 938 |
| 192-264 | 76-100 | LG 939 |
| 192-268 | 82-500 | LG 893 |
| 192-301 | 85-001 | LG 908 |
| 192-303 | 85-005 | |
| 192-311 | 48-001 | LG 914 |
| 192-320 | 45-104 | LG 939 |
| 192-328 | 85-008 | LG 909 |
| 192-333 | 82-250 | LG 902 |
| 192-338 | 85-012 | LG 909 |
| 192-353 | 82-225 | LG 871 |
| 192-402 | 82-020 | LG 903 |
| 192-651 | 82-677 | LG 903 |
| 192-653 | 82-678 | LG 904 |
| 192-726 | 05-060 | LG 914 |
| 192-727 | 05-061 | LG 914 |
| 192-728 | 81-102 | LG 805 |
| 192-729 | 81-101 | |
| 192-754 | 80-745 | LG 728 |
| 192-760 | 85-011 | LG 909 |
| 194-050 | 72-106 | LG 1029 |
| 194-051 | 72-107 | LG 1029 |
| 194-052 | 72-108 | LG 1031 |
| 194-100 | 72-304 | LG 1038 |
| 194-175 | 72-306 | LG 1038 |
| 194-250 | 72-318 | LG 1042 |
| 194-500 | 72-117 | LG 1036 |
| 196-002 | 72-420 | LG 1047 |
| 196-051 | 72-427 | LG 1029 |
| 196-052 | 72-430 | LG 1034 |
| 196-053 | 72-437 | LG 1030 |
| 196-200 | 72-746 | LG 1032 |
| 196-201 | 72-747 | LG 1036 |
| 196-207 | 72-745 | LG 1033 |
| 196-301 | 72-436 | LG 1034 |
| 196-302 | 72-500 | LG 1034 |
| 196-303 | 72-508 | LG 1034 |
| 196-501 | 72-450 | LG 1037 |
| 196-504 | 72-728 | LG 1044 |
| 196-505 | 72-442 | LG 1037 |
| 196-901 | 72-316 | LG 1042 |
| 610-345 | 07-004 | LG 769 |
| 7-01667 | 33-518 | LG 785 |
| 7-01673 | 33-519 | LG 785 |
| 7-039956 | 46-325 | LG 701 |
| 7-039989 | 60-015 | LG 716 |
| 7-04236 | 82-245 | |
| 7-042423 | 82-243 | LG 902 |
| 7-044013 | 92-119 | LG 492 |
| 7-044019 | 195-062 | LG 376 |
| 7-044023 | 91-395 | LG 493 |
| 7-044026 | 97-123 | LG 537 |
| 7-044027 | 97-008 | LG 526 |
| 7-044028 | 91-368 | LG 460 |
| 7-044033 | 91-256 | LG 437 |
| 7-044034 | 198-153 | LG 520 |
| 7-05054 | 65-204 | LG 342 |
| 7-05092 | 85-029 | LG 909 |
| 7-05093 | 85-028 | LG 908 |
| 7-052016 | 78-006 | LG 828 |
| 7-052018 | 78-005 | LG 823 |
| 7-052043 | 78-026 | LG 822 |
| 7-052046 | 78-011 | LG 827 |
| 7-05267 | 85-010 | |
| 7-05548 | 04-015 | LG 899 |
| 7-06292 | 33-115 | LG 738 |
| 7-078067 | 75-292 | LG 281 |
| 7-078069 | 75-231 | LG 281 |
| 7-078073 | 75-232 | LG 281 |
| 7-078074 | 75-234 | LG 281 |
| 7-078076 | 75-967 | LG 258 |
| 7-078079 | 75-249 | LG 305 |
| 7-078086 | 75-263 | LG 304 |
| 7-078089 | 75-283 | LG 256 |
| 7-078093 | 75-211 | LG 277 |
| 7-083032 | 30-054 | LG 200 |
| 7-083033 | 30-068 | LG 212 |
| 7-083034 | 30-073 | LG 183 |
| 7-083037 | 30-943 | LG 206 |
| 7-083044 | 30-056 | LG 208 |
| 7-083048 | 30-945 | LG 207 |
| 7-08548 | 95-052 | LG 398 |
| 7-08549 | 91-138 | LG 488 |
| 7-08550 | 91-078 | LG 490 |
| 7-09800 | 67-020 | LG 965 |
| 7-09801 | 67-012 | LG 965 |
| 7-09802 | 67-009 | LG 965 |
| 7-09803 | 67-003 | LG 965 |
| 7-09804 | 67-010 | LG 965 |
| 7-09805 | 67-013 | LG 965 |
| 7-09806 | 67-001 | LG 965 |
| 7-09807 | 67-005 | LG 965 |
| 7-09808 | 67-018 | LG 965 |
| 7-09809 | 67-017 | LG 965 |
| 7-09810 | 67-002 | LG 965 |
| 7-09811 | 67-014 | LG 965 |
| 7-09812 | 67-015 | LG 965 |
| 7-09813 | 67-011 | LG 965 |
| 7-09814 | 67-019 | LG 965 |
| 7-09816 | 67-008 | LG 965 |
| 7-09817 | 67-004 | LG 965 |
| 7-09818 | 67-007 | LG 965 |

## PRIME LINE

| PART No. | OREGON | Page |
|---|---|---|
| 7-01024 | 33-606 | LG 789 |
| 7-01029 | 33-628 | LG 789 |
| 7-01087 | 33-601 | LG 789 |
| 7-01090 | 33-210 | LG 867 |
| 7-01324 | 33-008 | LG 789 |
| 7-01338 | 33-016 | LG 789 |
| 7-01603 | 33-363 | LG 787 |
| 7-01605 | 33-365 | LG 784 |
| 7-01612 | 33-362 | LG 784 |
| 7-01634 | 33-333 | LG 786 |
| 7-01641 | 33-340 | LG 784 |
| 7-01643 | 33-344 | LG 784 |
| 7-01684 | 33-335 | LG 730 |
| 7-01826 | 33-320-0 | LG 731 |
| 7-01850 | 33-386 | LG 942 |
| 7-01852 | 33-385 | LG 942 |
| 7-01854 | 33-389 | LG 945 |
| 7-01859 | 33-240 | LG 948 |
| 7-01861 | 33-330 | LG 729 |
| 7-01862 | 42-008 | LG 945 |
| 7-01891 | 33-395 | LG 943 |
| 7-01895 | 33-392 | LG 944 |
| 7-01901 | 33-391 | LG 945 |
| 7-01906 | 33-396 | LG 944 |
| 7-01911 | 33-384 | LG 947 |
| 7-019272 | 33-382 | LG 947 |
| 7-01959 | 02-406 | LG 790 |
| 7-01960 | 02-402 | LG 790 |
| 7-01962 | 02-404 | LG 790 |
| 7-02000 | 49-815 | LG 626 |
| 7-02003 | 49-300 | LG 626 |
| 7-02020 | 49-201 | LG 608 |
| 7-02024 | 49-401 | LG 605 |
| 7-02025 | 49-078 | LG 603 |
| 7-02025 | 49-101 | LG 602 |
| 7-02043 | 49-301 | LG 606 |
| 7-02045 | 49-102 | LG 602 |
| 7-02100 | 49-004 | LG 622 |
| 7-02101 | 49-002 | LG 623 |
| 7-02105 | 49-005 | LG 622 |
| 7-02106 | 49-006 | LG 622 |
| 7-02109 | 49-008 | LG 623 |
| 7-02200 | 30-070 | LG 216 |
| 7-02201 | 30-095 | LG 206 |
| 7-02202 | 30-081 | LG 205 |
| 7-02203 | 30-082 | LG 205 |
| 7-02204 | 30-080 | LG 205 |
| 7-02208 | 30-083 | LG 219 |
| 7-02209 | 30-205 | LG 219 |
| 7-02210 | 30-044 | LG 179 |
| 7-02213 | 55-211 | LG 191 |
| 7-02220 | 30-091 | LG 217 |
| 7-02222 | 30-097 | LG 179 |
| 7-02223 | 30-094 | LG 180 |
| 7-02226 | 30-093 | LG 206 |
| 7-02227 | 30-105 | LG 179 |
| 7-02228 | 30-101 | LG 179 |
| 7-02232 | 30-100 | LG 217 |
| 7-02234 | 30-301 | LG 217 |
| 7-02235 | 30-098 | LG 206 |
| 7-02238 | 30-400 | LG 193 |
| 7-02239 | 30-094 | LG 180 |
| 7-02240 | 30-104 | LG 180 |
| 7-02241 | 30-106 | LG 179 |
| 7-02242 | 30-303 | LG 198 |
| 7-02245 | 30-432 | |
| 7-02247 | 30-430 | LG 211 |
| 7-02249 | 30-405 | LG 193 |
| 7-02251 | 30-421 | LG 220 |
| 7-02252 | 30-304 | LG 199 |
| 7-02253 | 30-117 | LG 219 |
| 7-02256 | 30-111 | LG 217 |
| 7-02257 | 30-710 | LG 181 |
| 7-02261 | 30-403 | LG 192 |
| 7-02262 | 30-404 | LG 192 |

# 2019 Aftermarket X-Reference

## PRIME LINE

| PART No. | OREGON | Page |
|---|---|---|
| 7-02265 | 30-107 | LG 180 |
| 7-02266 | 30-112 | LG 218 |
| 7-02267 | 30-305 | LG 198 |
| 7-02268 | 30-108 | LG 180 |
| 7-02272 | 30-410 | LG 220 |
| 7-02274 | 30-412 | LG 220 |
| 7-02275 | 30-923 | LG 186 |
| 7-02277 | 30-125 | LG 206 |
| 7-02278 | 30-920 | LG 186 |
| 7-02282 | 30-929 | LG 187 |
| 7-02283 | 30-924 | LG 186 |
| 7-02286 | 30-927 | LG 187 |
| 7-02297 | 30-506 | LG 195 |
| 7-02300 | 55-247 | LG 214 |
| 7-02323 | 07-103 | LG 775 |
| 7-02324 | 07-406 | LG 767 |
| 7-02350 | 07-001 | LG 765 |
| 7-02351 | 07-400 | LG 767 |
| 7-02356 | 07-201 | LG 779 |
| 7-02357 | 07-102 | LG 774 |
| 7-02358 | 07-206 | LG 776 |
| 7-02361 | 07-104 | LG 776 |
| 7-02363 | 07-208 | LG 779 |
| 7-02364 | 07-209 | LG 779 |
| 7-02365 | 07-210 | LG 779 |
| 7-02366 | 07-211 | LG 779 |
| 7-02370 | 49-034 | LG 630 |
| 7-02403 | 50-041 | LG 757 |
| 7-02406 | 50-043 | LG 757 |
| 7-02418 | 50-027 | LG 747 |
| 7-02426 | 50-032 | LG 759 |
| 7-02444 | 50-033 | LG 759 |
| 7-02559 | 49-402 | LG 758 |
| 7-02561 | 49-411 | LG 759 |
| 7-02602 | 50-407 | LG 758 |
| 7-02700 | 30-134 | LG 180 |
| 7-02705 | 30-102 | LG 220 |
| 7-02708 | 30-401 | LG 193 |
| 7-02709 | 30-406 | LG 193 |
| 7-02711 | 30-311 | LG 199 |
| 7-02712 | 30-309 | LG 199 |
| 7-02713 | 30-085 | LG 203 |
| 7-02719 | 30-142 | LG 217 |
| 7-02721 | 30-141 | LG 217 |
| 7-02722 | 30-414 | LG 221 |
| 7-02723 | 30-413 | LG 221 |
| 7-02724 | 30-415 | |
| 7-02742 | 30-049 | LG 181 |
| 7-02753 | 30-088 | LG 203 |
| 7-02755 | 30-025 | LG 208 |
| 7-02756 | 30-026 | LG 208 |
| 7-02788 | 30-116 | LG 219 |
| 7-02801 | 50-101 | LG 746 |
| 7-02816 | 50-206 | LG 758 |
| 7-02817 | 50-204 | LG 758 |
| 7-03122 | 78-649 | LG 841 |
| 7-03326 | 02-531 | |
| 7-03330 | 02-535 | |
| 7-03418 | 55-800 | LG 934 |
| 7-03419 | 55-820 | LG 935 |
| 7-03431 | 43-694 | LG 936 |
| 7-03437 | 43-685 | LG 936 |
| 7-03451 | 43-404 | LG 928 |
| 7-03455 | 43-012 | LG 927 |
| 7-03456 | 43-100 | LG 932 |
| 7-03457 | 43-200 | LG 932 |
| 7-03458 | 43-011 | LG 935 |
| 7-03472 | 43-532 | LG 936 |
| 7-03651 | 35-001 | LG 806 |
| 7-03653 | 35-022 | LG 807 |
| 7-03655 | 35-003 | LG 809 |
| 7-03658 | 35-012 | LG 806 |
| 7-03659 | 35-015 | LG 810 |
| 7-03662 | 35-010 | LG 809 |
| 7-03664 | 35-005 | LG 806 |
| 7-03665 | 35-004 | LG 806 |
| 7-03666 | 35-008 | LG 808 |
| 7-03669 | 35-002 | LG 806 |
| 7-03670 | 35-006 | LG 808 |
| 7-03670 | 35-026 | LG 807 |
| 7-03673 | 35-014 | LG 806 |
| 7-03678 | 35-021 | LG 810 |
| 7-03679 | 35-543 | LG 807 |
| 7-03681 | 35-016 | LG 809 |
| 7-03903 | 60-991 | LG 718 |
| 7-03904 | 60-061 | LG 718 |
| 7-03905 | 60-209 | LG 700 |
| 7-03906 | 60-220 | LG 708 |
| 7-03914 | 60-188 | LG 718 |
| 7-03924 | 02-107 | LG 723 |
| 7-03931 | 74-054 | LG 721 |
| 7-03932 | 02-115 | LG 723 |
| 7-03933 | 02-098 | LG 722 |
| 7-03934 | 02-099 | LG 722 |
| 7-03951 | 60-353 | LG 719 |
| 7-03966 | 46-302 | LG 709 |
| 7-03967 | 46-306 | LG 708 |
| 7-03970 | 60-106 | LG 701 |
| 7-03972 | 60-408 | LG 700 |
| 7-03993 | 60-522 | LG 715 |
| 7-04099 | 04-125 | LG 694 |
| 7-04101 | 45-088 | LG 240 |
| 7-04102 | 45-091 | LG 249 |
| 7-04105 | 45-087 | LG 243 |
| 7-04107 | 45-082 | LG 854 |
| 7-04108 | 45-092 | LG 854 |
| 7-04109 | 45-083 | LG 246 |
| 7-04110 | 45-081 | LG 249 |
| 7-04112 | 45-095 | LG 855 |
| 7-04143 | 48-211 | LG 233 |
| 7-04149 | 45-078 | LG 230 |
| 7-04182 | 72-745 | LG 1033 |
| 7-04197 | 45-107 | LG 245 |
| 7-04203 | 75-105 | LG 319 |
| 7-04204 | 75-073 | LG 319 |
| 7-04210 | 44-347 | LG 840 |
| 7-04212 | 75-068 | LG 318 |
| 7-04213 | 34-001 | LG 821 |
| 7-04217 | 44-323 | LG 838 |
| 7-04220 | 45-079 | LG 249 |
| 7-04221 | 45-098 | LG 243 |
| 7-04225- | 82-493 | LG 869 |
| 7-04227 | 82-514 | LG 869 |
| 7-04228 | 82-677 | LG 903 |
| 7-04229 | 82-243 | LG 902 |
| 7-04231 | 45-104 | LG 939 |
| 7-04232 | 45-034 | LG 224 |
| 7-04234 | 85-001 | LG 908 |
| 7-04240 | 82-013 | LG 891 |
| 7-04250 | 45-295 | LG 232 |
| 7-04258 | 82-244 | LG 910 |
| 7-04259 | 82-020 | LG 903 |
| 7-04265 | 82-501 | LG 894 |
| 7-04266 | 82-500 | LG 893 |
| 7-04267 | 82-502 | LG 894 |
| 7-04272 | 65-221 | LG 341 |
| 7-04273 | 65-220 | LG 340 |
| 7-04281 | 46-024 | LG 719 |
| 7-04288 | 85-005 | |
| 7-04292 | 45-010 | LG 238 |
| 7-04295 | 45-259 | LG 224 |
| 7-04298 | 45-205 | LG 228 |
| 7-04301 | 72-406 | LG 1029 |
| 7-04303 | 72-408 | LG 1029 |
| 7-04304 | 72-410 | LG 1030 |
| 7-043132 | 73-031 | LG 850 |
| 7-04326 | 72-427 | LG 1029 |
| 7-04327 | 72-430 | LG 1034 |
| 7-04329 | 72-437 | LG 1030 |
| 7-04330 | 72-446 | LG 1030 |
| 7-04346 | 72-106 | LG 1029 |
| 7-04347 | 72-107 | LG 1029 |
| 7-04348 | 72-108 | LG 1031 |
| 7-04349 | 72-110 | LG 1030 |
| 7-04377 | 72-436 | LG 1034 |
| 7-04378 | 72-500 | LG 1034 |
| 7-04379 | 72-508 | LG 1034 |
| 7-04380 | 72-304 | LG 1038 |
| 7-04381 | 72-318 | LG 1042 |
| 7-04385 | 72-117 | LG 1036 |
| 7-04387 | 72-109 | LG 1037 |
| 7-04392 | 72-442 | LG 1037 |
| 7-04409 | 99-112 | LG 556 |
| 7-04411 | 93-008 | LG 510 |
| 7-04418 | 91-393 | LG 485 |
| 7-04421 | 94-019 | LG 570 |
| 7-04425 | 91-761 | LG 578 |
| 7-04426 | 91-762 | LG 578 |
| 7-04427 | 91-291 | LG 457 |
| 7-04433 | 96-005 | |
| 7-04435 | 99-113 | LG 528 |
| 7-04439 | 92-011 | LG 490 |
| 7-04441 | 40-409 | LG 585 |
| 7-04444 | 40-843 | LG 588 |
| 7-04449 | 40-807 | LG 585 |
| 7-0445 | 40-408 | LG 589 |
| 7-04454 | 93-005 | LG 447 |
| 7-04457 | 30-400 | LG 193 |
| 7-04459 | 65-206 | LG 342 |
| 7-04468 | 95-023 | LG 380 |
| 7-04469 | 95-014 | LG 374 |
| 7-04471 | 94-018 | LG 565 |
| 7-04472 | 91-391 | LG 489 |
| 7-04481 | 95-052 | LG 398 |
| 7-04487 | 91-389 | LG 538 |
| 7-04498 | 99-117 | LG 556 |
| 7-04500 | 79-724 | LG 556 |
| 7-04510 | 91-242 | LG 371 |
| 7-04511 | 49-355 | LG 746 |
| 7-04518 | 95-045 | LG 374 |
| 7-04521 | 93-011 | LG 557 |
| 7-04524 | 95-011 | |
| 7-04526 | 91-713 | LG 422 |
| 7-04533 | 91-805 | LG 560 |
| 7-04534 | 91-167 | LG 416 |
| 7-04537 | 91-342 | LG 447 |
| 7-04539 | 49-003 | LG 622 |
| 7-04540 | 79-728 | LG 556 |
| 7-04541 | 98-037 | LG 574 |
| 7-04542 | 93-013 | LG 480 |
| 7-04552 | 91-430 | LG 497 |
| 7-04560 | 94-026 | LG 369 |
| 7-04563 | 91-806 | LG 447 |
| 7-04564 | 93-005 | LG 447 |
| 7-04569 | 91-253 | LG 415 |
| 7-04570 | 91-507 | LG 415 |
| 7-04572 | 91-509 | LG 424 |
| 7-04574 | 91-244 | LG 450 |
| 7-04576 | 98-019 | LG 516 |
| 7-04578 | 91-515 | LG 415 |
| 7-04588 | 94-017 | LG 441 |
| 7-04589 | 94-011 | LG 572 |
| 7-04590 | 94-021 | LG 573 |
| 7-04598 | 91-715 | LG 541 |
| 7-04599 | 91-502 | LG 477 |
| 7-04615 | 93-006 | LG 444 |
| 7-04616 | 93-010 | LG 432 |
| 7-04621 | 94-022 | LG 565 |
| 7-04623 | 97-105 | LG 523 |
| 7-04640 | 90-618 | LG 368 |
| 7-04641 | 90-619 | LG 368 |
| 7-04642 | 90-620 | LG 368 |
| 7-04643 | 90-621 | LG 368 |
| 7-04644 | 90-622 | LG 368 |
| 7-04646 | 95-024 | LG 465 |
| 7-04648 | 191-392 | LG 488 |
| 7-04649 | 91-398 | LG 488 |
| 7-04664 | 95-015 | LG 400 |
| 7-04665 | 97-107 | LG 524 |
| 7-04672 | 91-394 | LG 489 |
| 7-04673 | 97-110 | LG 525 |
| 7-04675 | 97-109 | LG 525 |
| 7-04680 | 91-586 | LG 485 |
| 7-04681 | 98-499 | LG 519 |
| 7-04684 | 94-770 | LG 569 |
| 7-04688 | 91-764 | LG 579 |
| 7-04690 | 91-352 | LG 482 |
| 7-04697 | 97-330 | LG 528 |
| 7-04698 | 98-486 | LG 512 |
| 7-04701 | 40-121 | LG 584 |
| 7-04703 | 40-503 | LG 589 |
| 7-04704 | 40-502 | LG 586 |
| 7-04708 | 91-327 | LG 404 |
| 7-04711 | 91-097 | LG 388 |
| 7-04712 | 91-330 | LG 513 |
| 7-04714 | 91-096 | LG 389 |
| 7-04716 | 95-027 | LG 398 |
| 7-04717 | 91-178 | LG 471 |
| 7-04722 | 91-093 | LG 389 |
| 7-04729 | 91-329 | LG 409 |
| 7-04736 | 99-121 | LG 551 |
| 7-04739 | 94-127 | LG 569 |
| 7-04748 | 91-254 | LG 456 |
| 7-04749 | 91-395 | LG 493 |

X

## PRIME LINE

| PART No. | OREGON | Page |
|---|---|---|
| 7-04754 | 40-403 | LG 589 |
| 7-04758 | 91-003 | LG 370 |
| 7-04761 | 91-003 | LG 370 |
| 7-04766 | 91-506 | LG 473 |
| 7-04768 | 91-181 | LG 495 |
| 7-04769 | 91-188 | LG 439 |
| 7-04785 | 98-007 | LG 401 |
| 7-04793 | 91-626 | LG 552 |
| 7-04794 | 91-621 | LG 563 |
| 7-04797 | 195-005 | LG 373 |
| 7-04801 | 71-102 | LG 956 |
| 7-04802 | 71-800 | LG 956 |
| 7-04803 | 71-816 | LG 956 |
| 7-04804 | 71-400 | LG 956 |
| 7-04806 | 71-104 | LG 956 |
| 7-04807 | 71-500 | |
| 7-04808 | 71-600 | LG 956 |
| 7-04809 | 71-101 | LG 956 |
| 7-04821 | 71-105 | LG 957 |
| 7-04822 | 71-511 | LG 956 |
| 7-04851 | 72-301 | LG 1037 |
| 7-04852 | 72-728 | LG 1044 |
| 7-04907 | 49-667 | LG 750 |
| 7-04916 | 07-303 | LG 770 |
| 7-04918 | 07-308 | LG 772 |
| 7-049191 | 45-110 | LG 245 |
| 7-049263 | 55-120 | LG 770 |
| 7-04960 | 91-622 | LG 536 |
| 7-04961 | 91-804 | LG 560 |
| 7-04965 | 91-180 | LG 460 |
| 7-04969 | 97-105 | LG 523 |
| 7-04973 | 95-031 | LG 377 |
| 7-04975 | 90-146 | LG 368 |
| 7-04976 | 90-144 | LG 368 |
| 7-04978 | 99-107 | LG 551 |
| 7-04979 | 91-620 | LG 470 |
| 7-04980 | 95-034 | LG 377 |
| 7-04982 | 195-032 | LG 425 |
| 7-04983 | 195-033 | LG 400 |
| 7-04984 | 91-714 | LG 543 |
| 7-04986 | 91-703 | LG 541 |
| 7-04995 | 91-005 | LG 458 |
| 7-04996 | 93-009 | LG 476 |
| 7-04998 | 40-411 | LG 589 |
| 7-05001 | 33-186 | LG 789 |
| 7-05025 | 85-011 | LG 909 |
| 7-05050 | 65-208 | LG 342 |
| 7-05097 | 31-907 | LG 929 |
| 7-05098 | 85-008 | LG 909 |
| 7-05099 | 85-012 | LG 909 |
| 7-05202 | 34-002 | LG 821 |
| 7-05203 | 34-005 | LG 821 |
| 7-05204 | 34-006 | LG 821 |
| 7-05205 | 34-009 | LG 821 |
| 7-05206 | 34-012 | LG 821 |
| 7-05207 | 34-015 | LG 821 |
| 7-05208 | 34-017 | LG 821 |
| 7-05209 | 34-018 | LG 821 |
| 7-05210 | 34-019 | LG 821 |
| 7-05211 | 34-020 | LG 821 |
| 7-05212 | 34-030 | LG 821 |
| 7-05213 | 34-031 | LG 821 |
| 7-05214 | 34-033 | LG 821 |
| 7-05215 | 34-034 | LG 821 |
| 7-05216 | 34-035 | LG 821 |
| 7-05217 | 34-037 | LG 821 |
| 7-05218 | 34-038 | LG 821 |
| 7-05220 | 34-810 | LG 725 |
| 7-05253 | 34-820 | LG 833 |
| 7-05291 | 48-148 | LG 695 |
| 7-05292 | 51-013 | LG 725 |
| 7-05305 | 34-024 | LG 822 |
| 7-05306 | 34-023 | LG 822 |
| 7-05308 | 44-332 | LG 838 |
| 7-05310 | 34-042 | LG 823 |
| 7-05315 | 78-673 | LG 839 |
| 7-05317 | 78-641 | LG 835 |
| 7-05319 | 78-643 | LG 835 |
| 7-05320 | 78-650 | LG 835 |
| 7-05321 | 78-651 | LG 835 |
| 7-05325 | 78-644 | LG 835 |
| 7-05327 | 78-646 | LG 841 |
| 7-05335 | 78-678 | LG 835 |
| 7-05338 | 34-826 | LG 833 |
| 7-05340 | 34-822 | LG 832 |
| 7-05341 | 34-824 | LG 832 |
| 7-05342 | 34-022 | LG 822 |
| 7-05343 | 78-050 | LG 831 |
| 7-05344 | 34-004 | LG 832 |
| 7-05352 | 48-001 | LG 914 |
| 7-05355 | 05-061 | LG 914 |
| 7-05361 | 84-010 | LG 913 |
| 7-05363 | 05-060 | LG 914 |
| 7-05383 | 44-368 | LG 837 |
| 7-05431 | 34-014 | LG 831 |
| 7-05438 | 44-340 | LG 838 |
| 7-05456 | 34-028 | LG 821 |
| 7-05489 | 44-500 | LG 840 |
| 7-05561 | 56-002 | LG 687 |
| 7-05671 | 86-005 | LG 782 |
| 7-05807 | 40-402 | LG 589 |
| 7-05808 | 40-411 | LG 589 |
| 7-05809 | 40-514 | LG 589 |
| 7-05814 | 40-140 | LG 584 |
| 7-05816 | 40-403 | LG 589 |
| 7-05820 | 40-316 | LG 586 |
| 7-05822 | 40-140 | LG 584 |
| 7-05935 | 42-455 | LG 721 |
| 7-05978 | 42-452 | LG 867 |
| 7-06002 | 84-004 | LG 675 |
| 7-06003 | 84-001 | LG 675 |
| 7-06010 | 45-634 | LG 675 |
| 7-06012 | 84-005 | LG 675 |
| 7-06014 | 84-002 | LG 675 |
| 7-06016 | 84-006 | LG 675 |
| 7-06049 | 48-043 | |
| 7-06057 | 72-747 | LG 1036 |
| 7-06058 | 72-746 | LG 1032 |
| 7-06059 | 76-100 | LG 939 |
| 7-06079 | 45-301 | LG 804 |
| 7-06080 | 45-305 | LG 804 |
| 7-06081 | 45-302 | LG 804 |
| 7-06082 | 45-306 | LG 804 |
| 7-06340 | 91-508 | LG 419 |
| 7-06341 | 91-218 | LG 420 |
| 7-06342 | 91-368 | LG 460 |
| 7-06375 | 91-403 | LG 488 |
| 7-06376 | 91-383 | LG 484 |
| 7-06377 | 91-384 | LG 487 |
| 7-06378 | 91-380 | LG 538 |
| 7-06385 | 91-433 | LG 498 |
| 7-06386 | 91-438 | LG 500 |
| 7-06397 | 98-496 | LG 515 |
| 7-06398 | 98-537 | LG 516 |
| 7-06403 | 98-050 | LG 521 |
| 7-06444 | 94-039 | LG 561 |
| 7-06445 | 94-038 | LG 568 |
| 7-06466 | 91-146 | LG 419 |
| 7-06476 | 91-217 | LG 558 |
| 7-06477 | 91-335 | LG 420 |
| 7-06478 | 91-259 | LG 432 |
| 7-06481 | 91-373 | LG 383 |
| 7-06482 | 91-369 | LG 434 |
| 7-06493 | 91-544 | LG 397 |
| 7-06702 | 91-399 | LG 493 |
| 7-06704 | 91-400 | LG 488 |
| 7-06707 | 91-436 | LG 498 |
| 7-06709 | 198-052 | LG 389 |
| 7-06711 | 198-049 | LG 518 |
| 7-06721 | 97-017 | LG 537 |
| 7-06728 | 99-103 | LG 551 |
| 7-06741 | 91-503 | LG 424 |
| 7-06747 | 91-766 | LG 579 |
| 7-06753 | 91-505 | LG 477 |
| 7-06754 | 91-266 | LG 431 |
| 7-06756 | 91-071 | LG 393 |
| 7-06931 | 195-003 | LG 400 |
| 7-07048 | 49-829 | LG 605 |
| 7-07064 | 07-010 | LG 764 |
| 7-07067 | 07-213 | LG 777 |
| 7-07100 | 07-204 | LG 778 |
| 7-07102 | 07-205 | LG 779 |
| 7-07103 | 07-101 | LG 775 |
| 7-07104 | 07-100 | LG 774 |
| 7-0712 | 49-804 | LG 610 |
| 7-07121 | 49-802 | LG 610 |
| 7-07122 | 49-801 | LG 610 |
| 7-07123 | 49-810 | LG 612 |
| 7-07125 | 49-807 | LG 611 |
| 7-07129 | 49-809 | LG 613 |
| 7-07130 | 49-800 | LG 610 |
| 7-07131 | 49-805 | LG 609 |
| 7-07139 | 49-814 | LG 614 |
| 7-07143 | 49-021 | LG 629 |
| 7-07144 | 49-806 | LG 611 |
| 7-07147 | 49-834 | LG 611 |
| 7-07160 | 55-212 | LG 209 |
| 7-07164 | 49-803 | LG 610 |
| 7-07175 | 30-925 | LG 187 |
| 7-07176 | 07-207 | LG 779 |
| 7-07181 | 49-816 | LG 612 |
| 7-07183 | 30-318 | LG 193 |
| 7-07184 | 49-833 | LG 611 |
| 7-07195 | 30-419 | LG 221 |
| 7-07436 | 48-200 | LG 694 |
| 7-07455 | 51-000 | LG 727 |
| 7-07456 | 45-100 | LG 239 |
| 7-07460 | 07-004 | LG 769 |
| 7-07461 | 07-392 | LG 767 |
| 7-07485 | 82-320 | LG 874 |
| 7-07876 | 75-043 | LG 312 |
| 7-07877 | 75-260 | LG 312 |
| 7-07922 | 75-031 | LG 278 |
| 7-07923 | 75-552 | LG 334 |
| 7-07925 | 75-114 | LG 281 |
| 7-07926 | 75-072 | LG 268 |
| 7-07927 | 75-212 | LG 268 |
| 7-07929 | 75-108 | LG 289 |
| 7-07930 | 75-494 | LG 335 |
| 7-07932 | 75-488 | LG 335 |
| 7-07934 | 75-403 | LG 256 |
| 7-07935 | 75-055 | LG 255 |
| 7-07936 | 75-097 | LG 289 |
| 7-07937 | 75-195 | LG 254 |
| 7-07938 | 75-169 | LG 290 |
| 7-07939 | 75-196 | LG 290 |
| 7-07940 | 75-164 | LG 262 |
| 7-07948 | 75-178 | LG 281 |
| 7-07949 | 75-008 | LG 301 |
| 7-07950 | 75-012 | LG 301 |
| 7-07953 | 75-018 | LG 301 |
| 7-07955 | 75-025 | LG 253 |
| 7-07956 | 75-027 | LG 302 |
| 7-07957 | 75-159 | LG 303 |
| 7-07958 | 75-161 | LG 255 |
| 7-07959 | 75-160 | LG 303 |
| 7-07964 | 75-022 | LG 307 |
| 7-07965 | 75-103 | LG 308 |
| 7-07966 | 75-042 | LG 308 |
| 7-07969 | 75-129 | LG 255 |
| 7-07970 | 75-210 | LG 309 |
| 7-07975 | 75-205 | LG 322 |
| 7-07982 | 75-197 | LG 262 |
| 7-07990 | 75-130 | LG 269 |
| 7-08122 | 73-022 | LG 847 |
| 7-08125 | 73-018 | LG 849 |
| 7-08251 | 48-145 | LG 698 |
| 7-08306 | 30-709 | LG 194 |
| 7-08315 | 30-317 | LG 194 |
| 7-08318 | 30-423 | LG 221 |
| 7-08319 | 30-418 | LG 221 |
| 7-08325 | 30-031 | LG 218 |
| 7-08329 | 30-027 | LG 194 |
| 7-08332 | 30-029 | LG 181 |
| 7-08351 | 30-015 | LG 194 |
| 7-08355 | 30-018 | LG 198 |
| 7-08362 | 30-023 | LG 205 |
| 7-08375 | 30-416 | LG 214 |
| 7-08377 | 55-243 | LG 215 |
| 7-08378 | 55-248 | LG 215 |
| 7-08379 | 55-244 | LG 215 |
| 7-08380 | 55-245 | LG 215 |
| 7-08383 | 30-710 | LG 181 |
| 7-08414 | 45-043 | LG 243 |
| 7-08419 | 45-113 | LG 242 |
| 7-08522 | 96-630 | LG 556 |
| 7-08529 | 94-618 | LG 506 |
| 7-08700 | 70-302 | LG 959 |
| 7-08707 | 70-301 | LG 959 |
| 7-08709 | 70-307 | LG 960 |
| 7-08710 | 70-311 | LG 960 |
| 7-08712 | 70-316 | LG 959 |
| 7-08716 | 70-343 | LG 958 |
| 7-08720 | 70-368 | LG 961 |

# 2019 Aftermarket X-Reference

## PRIME LINE

| PART No. | OREGON | Page |
|---|---|---|
| 7-08750 | 71-109 | LG 956 |
| 7-08752 | 71-276 | LG 956 |
| 7-08753 | 71-610 | LG 956 |
| 7-08754 | 71-250 | LG 956 |
| 7-08757 | 71-408 | LG 957 |
| 7-08759 | 71-107 | LG 957 |
| 7-08760 | 71-108 | LG 957 |
| 7-3H240 | 75-324 | LG 334 |
| 7-3H250 | 75-325 | LG 334 |
| 7-3H270 | 75-327 | LG 334 |
| 7-3H280 | 75-328 | LG 334 |
| 7-3H290 | 75-329 | LG 334 |
| 7-3H300 | 75-330 | LG 334 |
| 7-3H310 | 75-331 | LG 334 |
| 7-3H330 | 75-333 | LG 334 |
| 7-3H340 | 75-334 | LG 334 |
| 7-3H360 | 75-336 | LG 334 |
| 7-3H370 | 75-337 | LG 334 |
| 7-3H380 | 75-338 | LG 334 |
| 7-3H390 | 75-339 | LG 334 |
| 7-3H400 | 75-340 | LG 334 |
| 7-3H410 | 75-341 | LG 334 |
| 7-3H420 | 75-342 | LG 334 |
| 7-3H430 | 75-343 | LG 334 |
| 7-3H440 | 75-344 | LG 334 |
| 7-3H450 | 75-345 | LG 334 |
| 7-3H460 | 75-346 | LG 334 |
| 7-3H480 | 75-348 | LG 334 |
| 7-3H490 | 75-349 | LG 334 |
| 7-3H500 | 75-350 | LG 334 |
| 7-4H1000 | 75-400 | LG 335 |
| 7-4H1020 | 75-402 | LG 335 |
| 7-4H1140 | 75-414 | LG 335 |
| 7-4H230 | 75-423 | LG 334 |
| 7-4H240 | 75-424 | LG 334 |
| 7-4H250 | 75-425 | LG 334 |
| 7-4H260 | 75-426 | LG 334 |
| 7-4H270 | 75-427 | LG 334 |
| 7-4H280 | 75-428 | LG 334 |
| 7-4H290 | 75-429 | LG 334 |
| 7-4H310 | 75-431 | LG 334 |
| 7-4H320 | 75-432 | LG 334 |
| 7-4H330 | 75-433 | LG 334 |
| 7-4H340 | 75-434 | LG 334 |
| 7-4H350 | 75-435 | LG 334 |
| 7-4H360 | 75-436 | LG 334 |
| 7-4H370 | 75-437 | LG 334 |
| 7-4H380 | 75-438 | LG 334 |
| 7-4H390 | 75-439 | LG 334 |
| 7-4H400 | 75-440 | LG 334 |
| 7-4H410 | 75-441 | LG 334 |
| 7-4H420 | 75-442 | LG 334 |
| 7-4H430 | 75-443 | LG 334 |
| 7-4H450 | 75-445 | LG 334 |
| 7-4H460 | 75-446 | LG 334 |
| 7-4H470 | 75-447 | LG 334 |
| 7-4H4801 | 75-448 | LG 334 |
| 7-4H490 | 75-449 | LG 334 |
| 7-4H500 | 75-450 | LG 334 |
| 7-4H510 | 75-451 | LG 334 |
| 7-4H520 | 75-452 | LG 334 |
| 7-4H530 | 75-453 | LG 334 |
| 7-4H540 | 75-454 | LG 334 |
| 7-4H550 | 75-455 | LG 334 |
| 7-4H560 | 75-456 | LG 334 |
| 7-4H570 | 75-457 | LG 334 |
| 7-4H580 | 75-458 | LG 334 |
| 7-4H590 | 75-459 | LG 334 |
| 7-4H600 | 75-460 | LG 334 |
| 7-4H610 | 75-461 | LG 334 |
| 7-4H620 | 75-462 | LG 334 |
| 7-4H630 | 75-463 | LG 334 |
| 7-4H640 | 75-464 | LG 334 |
| 7-4H650 | 75-465 | LG 334 |
| 7-4H660 | 75-466 | LG 334 |
| 7-4H670 | 75-467 | LG 334 |
| 7-4H680 | 75-468 | LG 334 |
| 7-4H690 | 75-469 | LG 335 |
| 7-4H700 | 75-470 | LG 335 |
| 7-4H710 | 75-471 | LG 335 |
| 7-4H720 | 75-472 | LG 335 |
| 7-4H730 | 75-473 | LG 335 |
| 7-4H740 | 75-474 | LG 335 |
| 7-4H750 | 75-475 | LG 335 |
| 7-4H760 | 75-476 | LG 335 |
| 7-4H770 | 75-477 | LG 335 |
| 7-4H780 | 75-478 | LG 335 |
| 7-4H790 | 75-479 | LG 335 |
| 7-4H800 | 75-480 | LG 335 |
| 7-4H810 | 75-481 | LG 335 |
| 7-4H820 | 75-482 | LG 335 |
| 7-4H830 | 75-483 | LG 335 |
| 7-4H840 | 75-484 | LG 335 |
| 7-4H850 | 75-485 | LG 335 |
| 7-4H860 | 75-486 | LG 335 |
| 7-4H870 | 75-487 | LG 335 |
| 7-4H890 | 75-489 | LG 335 |
| 7-4H900 | 75-490 | LG 335 |
| 7-4H910 | 75-491 | LG 335 |
| 7-4H920 | 75-492 | LG 335 |
| 7-4H930 | 75-493 | LG 335 |
| 7-4H950 | 75-495 | LG 335 |
| 7-4H960 | 75-496 | LG 335 |
| 7-4H970 | 75-497 | LG 335 |
| 7-4H980 | 75-498 | LG 335 |
| 7-4H990 | 75-499 | LG 335 |
| 7-5H1000 | 75-500 | LG 335 |
| 7-5H270 | 75-527 | LG 334 |
| 7-5H290 | 75-529 | LG 334 |
| 7-5H300 | 75-530 | LG 334 |
| 7-5H310 | 75-531 | LG 334 |
| 7-5H320 | 75-532 | LG 334 |
| 7-5H330 | 75-533 | LG 334 |
| 7-5H340 | 75-534 | LG 334 |
| 7-5H350 | 75-535 | LG 334 |
| 7-5H360 | 75-536 | LG 334 |
| 7-5H370 | 75-537 | LG 334 |
| 7-5H380 | 75-538 | LG 334 |
| 7-5H390 | 75-539 | LG 334 |
| 7-5H400 | 75-540 | LG 334 |
| 7-5H410 | 75-541 | LG 334 |
| 7-5H420 | 75-542 | LG 334 |
| 7-5H430 | 75-543 | LG 334 |
| 7-5H440 | 75-544 | LG 334 |
| 7-5H450 | 75-545 | LG 334 |
| 7-5H460 | 75-546 | LG 334 |
| 7-5H470 | 75-547 | LG 334 |
| 7-5H480 | 75-548 | LG 334 |
| 7-5H490 | 75-549 | LG 334 |
| 7-5H500 | 75-550 | LG 334 |
| 7-5H510 | 75-551 | LG 334 |
| 7-5H530 | 75-553 | LG 334 |
| 7-5H540 | 75-554 | LG 334 |
| 7-5H550 | 75-555 | LG 334 |
| 7-5H560 | 75-556 | LG 334 |
| 7-5H570 | 75-557 | LG 334 |
| 7-5H580 | 75-558 | LG 253 |
| 7-5H590 | 75-559 | LG 334 |
| 7-5H600 | 75-560 | LG 334 |
| 7-5H610 | 75-561 | LG 334 |
| 7-5H620 | 75-562 | LG 334 |
| 7-5H630 | 75-563 | LG 253 |
| 7-5H640 | 75-564 | LG 334 |
| 7-5H650 | 75-565 | LG 253 |
| 7-5H660 | 75-566 | LG 334 |
| 7-5H670 | 75-567 | LG 334 |
| 7-5H680 | 75-568 | LG 334 |
| 7-5H690 | 75-569 | LG 335 |
| 7-5H700 | 75-570 | LG 335 |
| 7-5H710 | 75-571 | LG 335 |
| 7-5H720 | 75-572 | LG 335 |
| 7-5H730 | 75-573 | LG 335 |
| 7-5H740 | 75-574 | LG 335 |
| 7-5H750 | 75-575 | LG 335 |
| 7-5H760 | 75-576 | LG 335 |
| 7-5H770 | 75-577 | LG 335 |
| 7-5H780 | 75-578 | LG 335 |
| 7-5H790 | 75-579 | LG 335 |
| 7-5H800 | 75-580 | LG 335 |
| 7-5H810 | 75-581 | LG 335 |
| 7-5H820 | 75-582 | LG 254 |
| 7-5H830 | 75-583 | LG 335 |
| 7-5H840 | 75-584 | LG 335 |
| 7-5H850 | 75-585 | LG 335 |
| 7-5H860 | 75-586 | LG 335 |
| 7-5H870 | 75-587 | LG 335 |
| 7-5H880 | 75-588 | LG 335 |
| 7-5H890 | 75-589 | LG 335 |
| 7-5H900 | 75-590 | LG 335 |
| 7-5H910 | 75-591 | LG 335 |
| 7-5H920 | 75-592 | LG 335 |
| 7-5H930 | 75-593 | LG 335 |
| 7-5H940 | 75-594 | LG 335 |
| 7-5H950 | 75-595 | LG 335 |
| 7-5H960 | 75-596 | LG 335 |
| 7-5H970 | 75-597 | LG 335 |
| 7-5H990 | 75-599 | LG 335 |

## PRIME LINE (SIERRA)

| PART No. | OREGON | Page |
|---|---|---|
| 7-01024 | 33-606 | LG 789 |
| 7-01029 | 33-628 | LG 789 |
| 7-01087 | 33-601 | LG 789 |
| 7-01090 | 33-210 | LG 867 |
| 7-01324 | 33-008 | LG 789 |
| 7-01338 | 33-016 | LG 789 |
| 7-01603 | 33-363 | LG 787 |
| 7-01605 | 33-365 | LG 784 |
| 7-01612 | 33-362 | LG 784 |
| 7-01634 | 33-333 | LG 786 |
| 7-01850 | 33-386 | LG 942 |
| 7-01852 | 33-385 | LG 942 |
| 7-01854 | 33-389 | LG 945 |
| 7-01859 | 33-240 | LG 948 |
| 7-01861 | 33-330 | LG 729 |
| 7-01862 | 42-008 | LG 945 |
| 7-01891 | 33-395 | LG 943 |
| 7-01895 | 33-392 | LG 944 |
| 7-01901 | 33-391 | LG 945 |
| 7-01902 | 33-390 | |
| 7-01906 | 33-396 | LG 944 |
| 7-01911 | 33-384 | LG 947 |
| 7-019272 | 33-382 | LG 947 |
| 7-01959 | 02-406 | LG 790 |
| 7-01960 | 02-402 | LG 790 |
| 7-01962 | 02-404 | LG 790 |
| 7-02000 | 49-815 | LG 626 |
| 7-02003 | 49-300 | LG 626 |
| 7-02020 | 49-201 | LG 608 |
| 7-02024 | 49-401 | LG 605 |
| 7-02025 | 49-101 | LG 602 |
| 7-02043 | 49-301 | LG 606 |
| 7-02045 | 49-102 | LG 602 |
| 7-02100 | 49-004 | LG 622 |
| 7-02101 | 49-002 | LG 623 |
| 7-02105 | 49-005 | LG 622 |
| 7-02106 | 49-006 | LG 622 |
| 7-02109 | 49-008 | LG 623 |
| 7-02200 | 30-070 | LG 216 |
| 7-02201 | 30-095 | LG 206 |
| 7-02202 | 30-081 | LG 205 |
| 7-02203 | 30-082 | LG 205 |
| 7-02204 | 30-080 | LG 205 |
| 7-02208 | 30-083 | LG 219 |
| 7-02209 | 30-205 | LG 219 |
| 7-02210 | 30-044 | LG 179 |
| 7-02213 | 55-211 | LG 191 |
| 7-02220 | 30-091 | LG 217 |
| 7-02222 | 30-097 | LG 179 |
| 7-02223 | 30-094 | LG 180 |
| 7-02226 | 30-093 | LG 206 |
| 7-02227 | 30-105 | LG 179 |
| 7-02232 | 30-100 | LG 217 |
| 7-02234 | 30-301 | LG 217 |
| 7-02235 | 30-098 | LG 206 |
| 7-02240 | 30-104 | LG 180 |
| 7-02241 | 30-106 | LG 179 |
| 7-02242 | 30-303 | LG 198 |
| 7-02245 | 30-432 | |
| 7-02247 | 30-430 | LG 211 |
| 7-02249 | 30-405 | LG 193 |
| 7-02251 | 30-421 | LG 220 |
| 7-02252 | 30-304 | LG 199 |
| 7-02253 | 30-117 | LG 219 |
| 7-02256 | 30-111 | LG 217 |
| 7-02261 | 30-403 | LG 192 |
| 7-02262 | 30-404 | LG 192 |
| 7-02265 | 30-107 | LG 180 |
| 7-02266 | 30-112 | LG 218 |
| 7-02267 | 30-305 | LG 198 |
| 7-02268 | 30-108 | LG 180 |
| 7-02272 | 30-410 | LG 220 |
| 7-02274 | 30-412 | LG 220 |
| 7-02277 | 30-125 | LG 206 |

## PRIME LINE (SIERRA)

| PART No. | OREGON | Page |
|---|---|---|
| 7-02297 | 30-506 | LG 195 |
| 7-02300 | 55-247 | LG 214 |
| 7-02323 | 07-103 | LG 775 |
| 7-02324 | 07-406 | LG 767 |
| 7-02350 | 07-001 | LG 765 |
| 7-02351 | 07-400 | LG 767 |
| 7-02356 | 07-201 | LG 779 |
| 7-02357 | 07-102 | LG 774 |
| 7-02358 | 07-206 | LG 776 |
| 7-02361 | 07-104 | LG 776 |
| 7-02363 | 07-208 | LG 779 |
| 7-02364 | 07-209 | LG 779 |
| 7-02365 | 07-210 | LG 779 |
| 7-02366 | 07-211 | LG 779 |
| 7-02370 | 49-034 | LG 630 |
| 7-02403 | 50-041 | LG 757 |
| 7-02406 | 50-043 | LG 757 |
| 7-02418 | 50-027 | LG 747 |
| 7-02426 | 50-032 | LG 759 |
| 7-02444 | 50-033 | LG 759 |
| 7-02559 | 49-402 | LG 758 |
| 7-02561 | 49-411 | LG 759 |
| 7-02602 | 50-407 | LG 758 |
| 7-02700 | 30-134 | LG 180 |
| 7-02705 | 30-102 | LG 220 |
| 7-02708 | 30-401 | LG 193 |
| 7-02709 | 30-406 | LG 193 |
| 7-02711 | 30-311 | LG 199 |
| 7-02712 | 30-309 | LG 199 |
| 7-02713 | 30-085 | LG 203 |
| 7-02719 | 30-142 | LG 217 |
| 7-02721 | 30-141 | LG 217 |
| 7-02722 | 30-414 | LG 221 |
| 7-02723 | 30-413 | LG 221 |
| 7-02724 | 30-415 | |
| 7-02753 | 30-088 | LG 203 |
| 7-02755 | 30-025 | LG 208 |
| 7-02756 | 30-026 | LG 208 |
| 7-02788 | 30-116 | LG 219 |
| 7-02801 | 50-101 | LG 746 |
| 7-02816 | 50-206 | LG 758 |
| 7-02817 | 50-204 | LG 758 |
| 7-03122 | 78-649 | LG 841 |
| 7-03326 | 02-531 | |
| 7-03330 | 02-535 | |
| 7-03418 | 55-800 | LG 934 |
| 7-03419 | 55-820 | LG 935 |
| 7-03431 | 43-694 | LG 936 |
| 7-03437 | 43-685 | LG 936 |
| 7-03451 | 43-404 | LG 928 |
| 7-03455 | 43-012 | LG 927 |
| 7-03456 | 43-100 | LG 932 |
| 7-03457 | 43-200 | LG 932 |
| 7-03458 | 43-011 | LG 935 |
| 7-03472 | 43-532 | LG 936 |
| 7-03651 | 35-001 | LG 806 |
| 7-03653 | 35-022 | LG 807 |
| 7-03655 | 35-003 | LG 809 |
| 7-03658 | 35-012 | LG 806 |
| 7-03659 | 35-015 | LG 810 |
| 7-03662 | 35-010 | LG 809 |
| 7-03664 | 35-005 | LG 806 |
| 7-03665 | 35-004 | LG 806 |
| 7-03666 | 35-008 | LG 808 |
| 7-03669 | 35-002 | LG 806 |
| 7-03670 | 35-006 | LG 808 |
| 7-03673 | 35-014 | LG 806 |
| 7-03678 | 35-021 | LG 810 |
| 7-03679 | 35-543 | LG 807 |
| 7-03681 | 35-016 | LG 809 |
| 7-03903 | 60-991 | LG 718 |
| 7-03904 | 60-061 | LG 718 |
| 7-03905 | 60-209 | LG 700 |
| 7-03906 | 60-220 | LG 708 |
| 7-03914 | 60-188 | LG 718 |
| 7-03924 | 02-107 | LG 723 |
| 7-03931 | 74-054 | LG 721 |
| 7-03932 | 02-115 | LG 723 |
| 7-03933 | 02-098 | LG 722 |
| 7-03934 | 02-099 | LG 722 |
| 7-03951 | 60-353 | LG 719 |
| 7-03966 | 46-302 | LG 709 |
| 7-03967 | 46-306 | LG 708 |
| 7-03970 | 60-106 | LG 701 |
| 7-03972 | 60-408 | LG 700 |
| 7-03993 | 60-522 | LG 715 |
| 7-04099 | 04-125 | LG 694 |
| 7-04101 | 45-088 | LG 240 |
| 7-04102 | 45-091 | LG 249 |
| 7-04105 | 45-087 | LG 243 |
| 7-04107 | 45-082 | LG 854 |
| 7-04108 | 45-092 | LG 854 |
| 7-04109 | 45-083 | LG 246 |
| 7-04110 | 45-081 | LG 249 |
| 7-04112 | 45-095 | LG 855 |
| 7-04143 | 48-211 | LG 233 |
| 7-04149 | 45-078 | LG 230 |
| 7-04182 | 72-745 | LG 1033 |
| 7-04197 | 45-107 | LG 245 |
| 7-04203 | 75-105 | LG 319 |
| 7-04204 | 75-073 | LG 319 |
| 7-04210 | 44-347 | LG 840 |
| 7-04212 | 75-068 | LG 318 |
| 7-04213 | 34-001 | LG 821 |
| 7-04217 | 44-323 | LG 838 |
| 7-04220 | 45-079 | LG 249 |
| 7-04221 | 45-098 | LG 243 |
| 7-04225- | 82-493 | LG 869 |
| 7-04227 | 82-514 | LG 869 |
| 7-04228 | 82-677 | LG 903 |
| 7-04229 | 82-243 | LG 902 |
| 7-04231 | 45-104 | LG 939 |
| 7-04232 | 45-034 | LG 224 |
| 7-04234 | 85-001 | LG 908 |
| 7-04240 | 82-013 | LG 891 |
| 7-04250 | 45-295 | LG 232 |
| 7-04258 | 82-244 | LG 910 |
| 7-04259 | 82-020 | LG 903 |
| 7-04265 | 82-501 | LG 894 |
| 7-04266 | 82-500 | LG 893 |
| 7-04267 | 82-502 | LG 894 |
| 7-04272 | 65-221 | LG 341 |
| 7-04273 | 65-220 | LG 340 |
| 7-04281 | 46-024 | LG 719 |
| 7-04288 | 85-005 | |
| 7-04292 | 45-010 | LG 238 |
| 7-04295 | 45-259 | LG 224 |
| 7-04298 | 45-205 | LG 228 |
| 7-04301 | 72-406 | LG 1029 |
| 7-04303 | 72-408 | LG 1029 |
| 7-04304 | 72-410 | LG 1030 |
| 7-043132 | 73-031 | LG 850 |
| 7-04326 | 72-427 | LG 1029 |
| 7-04327 | 72-430 | LG 1034 |
| 7-04329 | 72-437 | LG 1030 |
| 7-04330 | 72-446 | LG 1030 |
| 7-04346 | 72-106 | LG 1029 |
| 7-04347 | 72-107 | LG 1029 |
| 7-04348 | 72-108 | LG 1031 |
| 7-04349 | 72-110 | LG 1030 |
| 7-04377 | 72-436 | LG 1034 |
| 7-04378 | 72-500 | LG 1034 |
| 7-04379 | 72-508 | LG 1034 |
| 7-04380 | 72-304 | LG 1038 |
| 7-04381 | 72-318 | LG 1042 |
| 7-04385 | 72-117 | LG 1036 |
| 7-04387 | 72-109 | LG 1037 |
| 7-04392 | 72-442 | LG 1037 |
| 7-04409 | 99-112 | LG 556 |
| 7-04411 | 93-008 | LG 510 |
| 7-04418 | 91-393 | LG 485 |
| 7-04421 | 94-019 | LG 570 |
| 7-04425 | 91-761 | LG 578 |
| 7-04426 | 91-762 | LG 578 |
| 7-04427 | 91-291 | LG 457 |
| 7-04433 | 96-005 | |
| 7-04435 | 99-113 | LG 528 |
| 7-04439 | 92-011 | LG 490 |
| 7-04441 | 40-409 | LG 585 |
| 7-04444 | 40-843 | LG 588 |
| 7-04449 | 40-807 | LG 585 |
| 7-0445 | 40-408 | LG 589 |
| 7-04454 | 93-005 | LG 447 |
| 7-04457 | 30-400 | LG 193 |
| 7-04459 | 65-206 | LG 342 |
| 7-04468 | 95-023 | LG 380 |
| 7-04469 | 95-014 | LG 374 |
| 7-04471 | 94-018 | LG 565 |
| 7-04472 | 91-391 | LG 489 |
| 7-04481 | 95-052 | LG 398 |
| 7-04487 | 91-389 | LG 538 |
| 7-04498 | 99-117 | LG 556 |
| 7-04500 | 79-724 | LG 556 |
| 7-04510 | 91-242 | LG 371 |
| 7-04511 | 49-355 | LG 746 |
| 7-04518 | 95-045 | LG 374 |
| 7-04521 | 93-011 | LG 557 |
| 7-04524 | 95-011 | |
| 7-04526 | 91-713 | LG 422 |
| 7-04533 | 91-805 | LG 560 |
| 7-04534 | 91-167 | LG 416 |
| 7-04537 | 91-342 | LG 447 |
| 7-04539 | 49-003 | LG 622 |
| 7-04540 | 79-728 | LG 556 |
| 7-04541 | 98-037 | LG 574 |
| 7-04542 | 93-013 | LG 480 |
| 7-04552 | 91-430 | LG 497 |
| 7-04560 | 94-026 | LG 369 |
| 7-04563 | 91-806 | LG 447 |
| 7-04564 | 93-005 | LG 447 |
| 7-04569 | 91-253 | LG 415 |
| 7-04570 | 91-507 | LG 415 |
| 7-04572 | 91-509 | LG 424 |
| 7-04574 | 91-244 | LG 450 |
| 7-04576 | 98-019 | LG 516 |
| 7-04578 | 91-515 | LG 415 |
| 7-04588 | 94-017 | LG 441 |
| 7-04589 | 94-011 | LG 572 |
| 7-04590 | 94-021 | LG 573 |
| 7-04598 | 91-715 | LG 541 |
| 7-04599 | 91-502 | LG 477 |
| 7-04615 | 93-006 | LG 444 |
| 7-04616 | 93-010 | LG 432 |
| 7-04621 | 94-022 | LG 565 |
| 7-04623 | 97-105 | LG 523 |
| 7-04640 | 90-618 | LG 368 |
| 7-04641 | 90-619 | LG 368 |
| 7-04642 | 90-620 | LG 368 |
| 7-04643 | 90-621 | LG 368 |
| 7-04644 | 90-622 | LG 368 |
| 7-04646 | 95-024 | LG 465 |
| 7-04648 | 191-392 | LG 488 |
| 7-04649 | 91-398 | LG 488 |
| 7-04664 | 95-015 | LG 400 |
| 7-04665 | 97-107 | LG 524 |
| 7-04672 | 91-394 | LG 489 |
| 7-04673 | 97-110 | LG 525 |
| 7-04675 | 97-109 | LG 525 |
| 7-04680 | 91-586 | LG 485 |
| 7-04681 | 98-499 | LG 519 |
| 7-04684 | 94-770 | LG 569 |
| 7-04688 | 91-764 | LG 579 |
| 7-04690 | 91-352 | LG 482 |
| 7-04697 | 97-330 | LG 528 |
| 7-04698 | 98-486 | LG 512 |
| 7-04701 | 40-121 | LG 584 |
| 7-04703 | 40-503 | LG 589 |
| 7-04704 | 40-502 | LG 586 |
| 7-04708 | 91-327 | LG 404 |
| 7-04711 | 91-097 | LG 388 |
| 7-04712 | 91-330 | LG 513 |
| 7-04714 | 91-096 | LG 389 |
| 7-04716 | 95-027 | LG 398 |
| 7-04717 | 91-178 | LG 471 |
| 7-04722 | 91-093 | LG 389 |
| 7-04729 | 91-329 | LG 409 |
| 7-04736 | 99-121 | LG 551 |
| 7-04739 | 94-127 | LG 569 |
| 7-04748 | 91-254 | LG 456 |
| 7-04749 | 91-395 | LG 493 |
| 7-04754 | 40-403 | LG 589 |
| 7-04758 | 91-003 | LG 370 |
| 7-04761 | 91-003 | LG 370 |
| 7-04766 | 91-506 | LG 473 |
| 7-04768 | 91-181 | LG 495 |
| 7-04769 | 91-188 | LG 439 |
| 7-04785 | 98-007 | LG 401 |
| 7-04793 | 91-626 | LG 552 |
| 7-04794 | 91-621 | LG 563 |
| 7-04797 | 195-005 | LG 373 |
| 7-04801 | 71-102 | LG 956 |
| 7-04802 | 71-800 | LG 956 |
| 7-04803 | 71-816 | LG 956 |
| 7-04804 | 71-400 | LG 956 |

# 2019 Aftermarket X-Reference

## PRIME LINE (SIERRA)

| PART No. | OREGON | Page |
|---|---|---|
| 7-04806 | 71-104 | LG 956 |
| 7-04807 | 71-500 | |
| 7-04808 | 71-600 | LG 956 |
| 7-04809 | 71-101 | LG 956 |
| 7-04821 | 71-105 | LG 957 |
| 7-04822 | 71-511 | LG 956 |
| 7-04851 | 72-301 | LG 1037 |
| 7-04852 | 72-728 | LG 1044 |
| 7-04907 | 49-667 | LG 750 |
| 7-04916 | 07-303 | LG 770 |
| 7-04918 | 07-308 | LG 772 |
| 7-049191 | 45-110 | LG 245 |
| 7-049263 | 55-120 | LG 770 |
| 7-04960 | 91-622 | LG 536 |
| 7-04961 | 91-804 | LG 560 |
| 7-04965 | 91-180 | LG 460 |
| 7-04969 | 97-105 | LG 523 |
| 7-04973 | 95-031 | LG 377 |
| 7-04975 | 90-146 | LG 368 |
| 7-04976 | 90-144 | LG 368 |
| 7-04978 | 99-107 | LG 551 |
| 7-04979 | 91-620 | LG 470 |
| 7-04980 | 95-034 | LG 377 |
| 7-04982 | 195-032 | LG 425 |
| 7-04983 | 195-033 | LG 400 |
| 7-04984 | 91-714 | LG 543 |
| 7-04986 | 91-703 | LG 541 |
| 7-04995 | 91-005 | LG 458 |
| 7-04996 | 93-009 | LG 476 |
| 7-04998 | 40-411 | LG 589 |
| 7-05001 | 33-186 | LG 789 |
| 7-05025 | 85-011 | LG 909 |
| 7-05050 | 65-208 | LG 342 |
| 7-05097 | 31-907 | LG 929 |
| 7-05098 | 85-008 | LG 909 |
| 7-05099 | 85-012 | LG 909 |
| 7-05202 | 34-002 | LG 821 |
| 7-05203 | 34-005 | LG 821 |
| 7-05204 | 34-006 | LG 821 |
| 7-05205 | 34-009 | LG 821 |
| 7-05206 | 34-012 | LG 821 |
| 7-05207 | 34-015 | LG 821 |
| 7-05208 | 34-017 | LG 821 |
| 7-05209 | 34-018 | LG 821 |
| 7-05210 | 34-019 | LG 821 |
| 7-05211 | 34-020 | LG 821 |
| 7-05212 | 34-030 | LG 821 |
| 7-05213 | 34-031 | LG 821 |
| 7-05214 | 34-033 | LG 821 |
| 7-05215 | 34-034 | LG 821 |
| 7-05216 | 34-035 | LG 821 |
| 7-05217 | 34-037 | LG 821 |
| 7-05218 | 34-038 | LG 821 |
| 7-05220 | 34-810 | LG 725 |
| 7-05253 | 34-820 | LG 833 |
| 7-05291 | 48-148 | LG 695 |
| 7-05292 | 51-013 | LG 725 |
| 7-05305 | 34-024 | LG 822 |
| 7-05306 | 34-023 | LG 822 |
| 7-05308 | 44-332 | LG 838 |
| 7-05310 | 34-042 | LG 823 |
| 7-05315 | 78-673 | LG 839 |
| 7-05317 | 78-641 | LG 835 |
| 7-05319 | 78-643 | LG 835 |
| 7-05320 | 78-650 | LG 835 |
| 7-05321 | 78-651 | LG 835 |
| 7-05325 | 78-644 | LG 835 |
| 7-05327 | 78-646 | LG 841 |
| 7-05335 | 78-678 | LG 835 |
| 7-05338 | 34-826 | LG 833 |
| 7-05340 | 34-822 | LG 832 |
| 7-05341 | 34-824 | LG 832 |
| 7-05342 | 34-022 | LG 822 |
| 7-05343 | 78-050 | LG 831 |
| 7-05344 | 34-004 | LG 832 |
| 7-05352 | 48-001 | LG 914 |
| 7-05355 | 05-061 | LG 914 |
| 7-05361 | 84-010 | LG 913 |
| 7-05363 | 05-060 | LG 914 |
| 7-05383 | 44-368 | LG 837 |
| 7-05431 | 34-014 | LG 831 |
| 7-05438 | 44-340 | LG 838 |
| 7-05456 | 34-028 | LG 821 |
| 7-05489 | 44-500 | LG 840 |
| 7-05561 | 56-002 | LG 687 |
| 7-05671 | 86-005 | LG 782 |
| 7-05807 | 40-402 | LG 589 |
| 7-05808 | 40-411 | LG 589 |
| 7-05809 | 40-514 | LG 589 |
| 7-05814 | 40-140 | LG 584 |
| 7-05816 | 40-403 | LG 589 |
| 7-05820 | 40-316 | LG 586 |
| 7-05822 | 40-140 | LG 584 |
| 7-05935 | 42-455 | LG 721 |
| 7-05978 | 42-452 | LG 867 |
| 7-06002 | 84-004 | LG 675 |
| 7-06003 | 84-001 | LG 675 |
| 7-06010 | 45-634 | LG 675 |
| 7-06012 | 84-005 | LG 675 |
| 7-06014 | 84-002 | LG 675 |
| 7-06016 | 84-006 | LG 675 |
| 7-06049 | 48-043 | |
| 7-06057 | 72-747 | LG 1036 |
| 7-06058 | 72-746 | LG 1032 |
| 7-06059 | 76-100 | LG 939 |
| 7-06079 | 45-301 | LG 804 |
| 7-06080 | 45-305 | LG 804 |
| 7-06081 | 45-302 | LG 804 |
| 7-06082 | 45-306 | LG 804 |
| 7-06340 | 91-508 | LG 419 |
| 7-06341 | 91-218 | LG 420 |
| 7-06342 | 91-368 | LG 460 |
| 7-06375 | 91-403 | LG 488 |
| 7-06376 | 91-383 | LG 484 |
| 7-06377 | 91-384 | LG 487 |
| 7-06378 | 91-380 | LG 538 |
| 7-06385 | 91-433 | LG 498 |
| 7-06386 | 91-438 | LG 500 |
| 7-06397 | 98-496 | LG 515 |
| 7-06398 | 98-537 | LG 516 |
| 7-06403 | 98-050 | LG 521 |
| 7-06444 | 94-039 | LG 561 |
| 7-06445 | 94-038 | LG 568 |
| 7-06466 | 91-146 | LG 419 |
| 7-06476 | 91-217 | LG 558 |
| 7-06477 | 91-335 | LG 420 |
| 7-06478 | 91-259 | LG 432 |
| 7-06481 | 91-373 | LG 383 |
| 7-06482 | 91-369 | LG 434 |
| 7-06493 | 91-544 | LG 397 |
| 7-06702 | 91-399 | LG 493 |
| 7-06704 | 91-400 | LG 488 |
| 7-06707 | 91-436 | LG 498 |
| 7-06709 | 198-052 | LG 389 |
| 7-06711 | 198-049 | LG 518 |
| 7-06721 | 97-017 | LG 537 |
| 7-06728 | 99-103 | LG 551 |
| 7-06741 | 91-503 | LG 424 |
| 7-06747 | 91-766 | LG 579 |
| 7-06753 | 91-505 | LG 477 |
| 7-06754 | 91-266 | LG 431 |
| 7-06756 | 91-071 | LG 393 |
| 7-06931 | 195-003 | LG 400 |
| 7-07048 | 49-829 | LG 605 |
| 7-07064 | 07-010 | LG 764 |
| 7-07067 | 07-213 | LG 777 |
| 7-07100 | 07-204 | LG 778 |
| 7-07102 | 07-205 | LG 779 |
| 7-07103 | 07-101 | LG 775 |
| 7-07104 | 07-100 | LG 774 |
| 7-0712 | 49-804 | LG 610 |
| 7-07121 | 49-802 | LG 610 |
| 7-07122 | 49-801 | LG 610 |
| 7-07123 | 49-810 | LG 612 |
| 7-07125 | 49-807 | LG 611 |
| 7-07129 | 49-809 | LG 613 |
| 7-07130 | 49-800 | LG 610 |
| 7-07131 | 49-805 | LG 609 |
| 7-07139 | 49-814 | LG 614 |
| 7-07143 | 49-021 | LG 629 |
| 7-07144 | 49-806 | LG 611 |
| 7-07147 | 49-834 | LG 611 |
| 7-07160 | 55-212 | LG 209 |
| 7-07164 | 49-803 | LG 610 |
| 7-07176 | 07-207 | LG 779 |
| 7-07181 | 49-816 | LG 612 |
| 7-07184 | 49-833 | LG 611 |
| 7-07195 | 30-419 | LG 221 |
| 7-07436 | 48-200 | LG 694 |
| 7-07455 | 51-000 | LG 727 |
| 7-07456 | 45-100 | LG 239 |
| 7-07460 | 07-004 | LG 769 |
| 7-07461 | 07-392 | LG 767 |
| 7-07485 | 82-320 | LG 874 |
| 7-07876 | 75-043 | LG 312 |
| 7-07877 | 75-260 | LG 312 |
| 7-07922 | 75-031 | LG 278 |
| 7-07923 | 75-552 | LG 334 |
| 7-07925 | 75-114 | LG 281 |
| 7-07926 | 75-072 | LG 268 |
| 7-07927 | 75-212 | LG 268 |
| 7-07929 | 75-108 | LG 289 |
| 7-07930 | 75-494 | LG 335 |
| 7-07932 | 75-488 | LG 335 |
| 7-07934 | 75-403 | LG 256 |
| 7-07935 | 75-055 | LG 255 |
| 7-07936 | 75-097 | LG 289 |
| 7-07937 | 75-195 | LG 254 |
| 7-07938 | 75-169 | LG 290 |
| 7-07939 | 75-196 | LG 290 |
| 7-07940 | 75-164 | LG 262 |
| 7-07948 | 75-178 | LG 281 |
| 7-07949 | 75-008 | LG 301 |
| 7-07950 | 75-012 | LG 301 |
| 7-07953 | 75-018 | LG 301 |
| 7-07955 | 75-025 | LG 253 |
| 7-07956 | 75-027 | LG 302 |
| 7-07957 | 75-159 | LG 303 |
| 7-07958 | 75-161 | LG 255 |
| 7-07959 | 75-160 | LG 303 |
| 7-07964 | 75-022 | LG 307 |
| 7-07965 | 75-103 | LG 308 |
| 7-07966 | 75-042 | LG 308 |
| 7-07969 | 75-129 | LG 255 |
| 7-07970 | 75-210 | LG 309 |
| 7-07975 | 75-205 | LG 322 |
| 7-07982 | 75-197 | LG 262 |
| 7-07990 | 75-130 | LG 269 |
| 7-08122 | 73-022 | LG 847 |
| 7-08125 | 73-018 | LG 849 |
| 7-08251 | 48-145 | LG 698 |
| 7-08315 | 30-317 | LG 194 |
| 7-08318 | 30-423 | LG 221 |
| 7-08319 | 30-418 | LG 221 |
| 7-08325 | 30-031 | LG 218 |
| 7-08329 | 30-027 | LG 194 |
| 7-08332 | 30-029 | LG 181 |
| 7-08351 | 30-015 | LG 194 |
| 7-08355 | 30-018 | LG 198 |
| 7-08362 | 30-023 | LG 205 |
| 7-08375 | 30-416 | LG 214 |
| 7-08377 | 55-243 | LG 215 |
| 7-08378 | 55-248 | LG 215 |
| 7-08379 | 55-244 | LG 215 |
| 7-08380 | 55-245 | LG 215 |
| 7-08383 | 30-710 | LG 181 |
| 7-08414 | 45-043 | LG 243 |
| 7-08419 | 45-113 | LG 242 |
| 7-08522 | 96-630 | LG 556 |
| 7-08529 | 94-618 | LG 506 |
| 7-08700 | 70-302 | LG 959 |
| 7-08707 | 70-301 | LG 959 |
| 7-08709 | 70-307 | LG 960 |
| 7-08710 | 70-311 | LG 960 |
| 7-08712 | 70-316 | LG 959 |
| 7-08716 | 70-343 | LG 958 |
| 7-08720 | 70-368 | LG 961 |
| 7-08750 | 71-109 | LG 956 |
| 7-08752 | 71-276 | LG 956 |
| 7-08753 | 71-610 | LG 956 |
| 7-08754 | 71-250 | LG 956 |
| 7-08757 | 71-408 | LG 957 |
| 7-08759 | 71-107 | LG 957 |
| 7-08760 | 71-108 | LG 957 |
| 7-3H240 | 75-324 | LG 334 |
| 7-3H250 | 75-325 | LG 334 |
| 7-3H270 | 75-327 | LG 334 |
| 7-3H280 | 75-328 | LG 334 |
| 7-3H290 | 75-329 | LG 334 |
| 7-3H300 | 75-330 | LG 334 |
| 7-3H310 | 75-331 | LG 334 |
| 7-3H330 | 75-333 | LG 334 |
| 7-3H340 | 75-334 | LG 334 |
| 7-3H360 | 75-336 | LG 334 |

X

## PRIME LINE (SIERRA)

| PART No. | OREGON | Page |
|---|---|---|
| 7-3H370 | 75-337 | LG 334 |
| 7-3H380 | 75-338 | LG 334 |
| 7-3H390 | 75-339 | LG 334 |
| 7-3H400 | 75-340 | LG 334 |
| 7-3H410 | 75-341 | LG 334 |
| 7-3H420 | 75-342 | LG 334 |
| 7-3H430 | 75-343 | LG 334 |
| 7-3H440 | 75-344 | LG 334 |
| 7-3H450 | 75-345 | LG 334 |
| 7-3H460 | 75-346 | LG 334 |
| 7-3H480 | 75-348 | LG 334 |
| 7-3H490 | 75-349 | LG 334 |
| 7-3H500 | 75-350 | LG 334 |
| 7-4H1000 | 75-400 | LG 335 |
| 7-4H1020 | 75-402 | LG 335 |
| 7-4H1140 | 75-414 | LG 335 |
| 7-4H230 | 75-423 | LG 334 |
| 7-4H240 | 75-424 | LG 334 |
| 7-4H250 | 75-425 | LG 334 |
| 7-4H260 | 75-426 | LG 334 |
| 7-4H270 | 75-427 | LG 334 |
| 7-4H280 | 75-428 | LG 334 |
| 7-4H290 | 75-429 | LG 334 |
| 7-4H310 | 75-431 | LG 334 |
| 7-4H320 | 75-432 | LG 334 |
| 7-4H330 | 75-433 | LG 334 |
| 7-4H340 | 75-434 | LG 334 |
| 7-4H350 | 75-435 | LG 334 |
| 7-4H360 | 75-436 | LG 334 |
| 7-4H370 | 75-437 | LG 334 |
| 7-4H380 | 75-438 | LG 334 |
| 7-4H390 | 75-439 | LG 334 |
| 7-4H400 | 75-440 | LG 334 |
| 7-4H410 | 75-441 | LG 334 |
| 7-4H420 | 75-442 | LG 334 |
| 7-4H430 | 75-443 | LG 334 |
| 7-4H450 | 75-445 | LG 334 |
| 7-4H460 | 75-446 | LG 334 |
| 7-4H470 | 75-447 | LG 334 |
| 7-4H4801 | 75-448 | LG 334 |
| 7-4H490 | 75-449 | LG 334 |
| 7-4H500 | 75-450 | LG 334 |
| 7-4H510 | 75-451 | LG 334 |
| 7-4H520 | 75-452 | LG 334 |
| 7-4H530 | 75-453 | LG 334 |
| 7-4H540 | 75-454 | LG 334 |
| 7-4H550 | 75-455 | LG 334 |
| 7-4H560 | 75-456 | LG 334 |
| 7-4H570 | 75-457 | LG 334 |
| 7-4H580 | 75-458 | LG 334 |
| 7-4H590 | 75-459 | LG 334 |
| 7-4H600 | 75-460 | LG 334 |
| 7-4H610 | 75-461 | LG 334 |
| 7-4H620 | 75-462 | LG 334 |
| 7-4H630 | 75-463 | LG 334 |
| 7-4H640 | 75-464 | LG 334 |
| 7-4H650 | 75-465 | LG 334 |
| 7-4H660 | 75-466 | LG 334 |
| 7-4H670 | 75-467 | LG 334 |
| 7-4H680 | 75-468 | LG 334 |
| 7-4H690 | 75-469 | LG 335 |
| 7-4H700 | 75-470 | LG 335 |
| 7-4H710 | 75-471 | LG 335 |
| 7-4H720 | 75-472 | LG 335 |
| 7-4H730 | 75-473 | LG 335 |
| 7-4H740 | 75-474 | LG 335 |
| 7-4H750 | 75-475 | LG 335 |
| 7-4H760 | 75-476 | LG 335 |
| 7-4H770 | 75-477 | LG 335 |
| 7-4H780 | 75-478 | LG 335 |
| 7-4H790 | 75-479 | LG 335 |
| 7-4H800 | 75-480 | LG 335 |
| 7-4H810 | 75-481 | LG 335 |
| 7-4H820 | 75-482 | LG 335 |
| 7-4H830 | 75-483 | LG 335 |
| 7-4H840 | 75-484 | LG 335 |
| 7-4H850 | 75-485 | LG 335 |
| 7-4H860 | 75-486 | LG 335 |
| 7-4H870 | 75-487 | LG 335 |
| 7-4H890 | 75-489 | LG 335 |
| 7-4H900 | 75-490 | LG 335 |
| 7-4H910 | 75-491 | LG 335 |
| 7-4H920 | 75-492 | LG 335 |
| 7-4H930 | 75-493 | LG 335 |
| 7-4H950 | 75-495 | LG 335 |
| 7-4H960 | 75-496 | LG 335 |
| 7-4H970 | 75-497 | LG 335 |
| 7-4H980 | 75-498 | LG 335 |
| 7-4H990 | 75-499 | LG 335 |
| 7-5H1000 | 75-500 | LG 335 |
| 7-5H270 | 75-527 | LG 334 |
| 7-5H290 | 75-529 | LG 334 |
| 7-5H300 | 75-530 | LG 334 |
| 7-5H310 | 75-531 | LG 334 |
| 7-5H320 | 75-532 | LG 334 |
| 7-5H330 | 75-533 | LG 334 |
| 7-5H340 | 75-534 | LG 334 |
| 7-5H350 | 75-535 | LG 334 |
| 7-5H360 | 75-536 | LG 334 |
| 7-5H370 | 75-537 | LG 334 |
| 7-5H380 | 75-538 | LG 334 |
| 7-5H390 | 75-539 | LG 334 |
| 7-5H400 | 75-540 | LG 334 |
| 7-5H410 | 75-541 | LG 334 |
| 7-5H420 | 75-542 | LG 334 |
| 7-5H430 | 75-543 | LG 334 |
| 7-5H440 | 75-544 | LG 334 |
| 7-5H450 | 75-545 | LG 334 |
| 7-5H460 | 75-546 | LG 334 |
| 7-5H470 | 75-547 | LG 334 |
| 7-5H480 | 75-548 | LG 334 |
| 7-5H490 | 75-549 | LG 334 |
| 7-5H500 | 75-550 | LG 334 |
| 7-5H510 | 75-551 | LG 334 |
| 7-5H530 | 75-553 | LG 334 |
| 7-5H540 | 75-554 | LG 334 |
| 7-5H550 | 75-555 | LG 334 |
| 7-5H560 | 75-556 | LG 334 |
| 7-5H570 | 75-557 | LG 334 |
| 7-5H580 | 75-558 | LG 253 |
| 7-5H590 | 75-559 | LG 334 |
| 7-5H600 | 75-560 | LG 334 |
| 7-5H610 | 75-561 | LG 334 |
| 7-5H620 | 75-562 | LG 334 |
| 7-5H630 | 75-563 | LG 253 |
| 7-5H640 | 75-564 | LG 334 |
| 7-5H650 | 75-565 | LG 253 |
| 7-5H660 | 75-566 | LG 334 |
| 7-5H670 | 75-567 | LG 334 |
| 7-5H680 | 75-568 | LG 334 |
| 7-5H690 | 75-569 | LG 335 |
| 7-5H700 | 75-570 | LG 335 |
| 7-5H710 | 75-571 | LG 335 |
| 7-5H720 | 75-572 | LG 335 |
| 7-5H730 | 75-573 | LG 335 |
| 7-5H740 | 75-574 | LG 335 |
| 7-5H750 | 75-575 | LG 335 |
| 7-5H760 | 75-576 | LG 335 |
| 7-5H770 | 75-577 | LG 335 |
| 7-5H780 | 75-578 | LG 335 |
| 7-5H790 | 75-579 | LG 335 |
| 7-5H800 | 75-580 | LG 335 |
| 7-5H810 | 75-581 | LG 335 |
| 7-5H820 | 75-582 | LG 254 |
| 7-5H830 | 75-583 | LG 335 |
| 7-5H840 | 75-584 | LG 335 |
| 7-5H850 | 75-585 | LG 335 |
| 7-5H860 | 75-586 | LG 335 |
| 7-5H870 | 75-587 | LG 335 |
| 7-5H880 | 75-588 | LG 335 |
| 7-5H890 | 75-589 | LG 335 |
| 7-5H900 | 75-590 | LG 335 |
| 7-5H910 | 75-591 | LG 335 |
| 7-5H920 | 75-592 | LG 335 |
| 7-5H930 | 75-593 | LG 335 |
| 7-5H940 | 75-594 | LG 335 |
| 7-5H950 | 75-595 | LG 335 |
| 7-5H960 | 75-596 | LG 335 |
| 7-5H970 | 75-597 | LG 335 |
| 7-5H990 | 75-599 | LG 335 |

## ROTARY

| PART No. | OREGON | Page |
|---|---|---|
| 10007 | 72-163 | LG 1040 |
| 10009 | 75-263 | LG 304 |
| 10011 | 75-211 | LG 277 |
| 10018 | 07-025 | LG 771 |
| 10027 | 75-208 | LG 277 |
| 10029 | 75-199 | LG 254 |
| 10036 | 75-283 | LG 256 |
| 10037 | 75-230 | LG 281 |
| 10040 | 75-961 | LG 281 |
| 10041 | 75-967 | LG 258 |
| 10042 | 75-368 | LG 309 |
| 10043 | 75-268 | LG 313 |
| 10044 | 75-216 | LG 257 |
| 10055 | 49-036 | LG 628 |
| 10066 | 97-022 | LG 524 |
| 10071 | 91-256 | LG 437 |
| 10072 | 96-364 | LG 488 |
| 10073 | 596-730 | LG 490 |
| 10074 | 92-119 | LG 492 |
| 10076 | 175-912 | LG 291 |
| 10076 | 75-912 | LG 255 |
| 10077 | 175-654 | LG 263 |
| 10077 | 75-654 | LG 263 |
| 1008 | 94-017 | LG 441 |
| 10084 | 33-760-0 | LG 926 |
| 10086 | 49-070 | LG 604 |
| 10087 | 72-094 | LG 1042 |
| 10089 | 75-148 | LG 300 |
| 1009 | 91-180 | LG 460 |
| 10090 | 75-192 | LG 251 |
| 10091 | 07-109 | LG 778 |
| 10093 | 91-705 | LG 540 |
| 10094 | 91-706 | LG 550 |
| 10095 | 91-723 | LG 508 |
| 10096 | 91-701 | LG 545 |
| 10098 | 58-114 | LG 960 |
| 1010 | 93-006 | LG 444 |
| 10100 | 75-264 | LG 304 |
| 10101 | 71-408 | LG 957 |
| 10102 | 91-534 | LG 578 |
| 10103 | 49-029 | LG 609 |
| 10104 | 30-444 | LG 187 |
| 10105 | 30-447 | LG 186 |
| 10106 | 72-701 | LG 1044 |
| 10118 | 46-306 | LG 708 |
| 10127 | 70-371 | LG 961 |
| 10128 | 34-060 | LG 823 |
| 10129 | 34-061 | LG 823 |
| 10131 | 34-062 | LG 823 |
| 10133 | 34-063 | LG 823 |
| 10134 | 34-064 | LG 823 |
| 10139 | 34-051 | LG 823 |
| 10140 | 34-050 | LG 823 |
| 10141 | 34-052 | LG 823 |
| 10146 | 34-053 | LG 823 |
| 10149 | 34-055 | LG 823 |
| 1015 | 98-019 | LG 516 |
| 10152 | 34-056 | LG 823 |
| 10153 | 34-058 | LG 823 |
| 10154 | 34-057 | LG 823 |
| 10156 | 78-026 | LG 822 |
| 10158 | 34-106 | LG 830 |
| 10169 | 76-014 | LG 726 |
| 10183 | 30-957 | LG 209 |
| 10184 | 30-074 | LG 183 |
| 10184 | 30-172 | LG 184 |
| 10185 | 44-365 | LG 837 |
| 10186 | 44-367 | LG 838 |
| 10189 | 82-245 | |
| 10190 | 33-516 | LG 866 |
| 10192 | 55-994 | LG 988 |
| 10193 | 70-143 | LG 958 |
| 10206 | 07-017 | LG 1022 |
| 1021 | 98-057 | LG 513 |
| 10210 | 15-051 | LG 250 |
| 10214 | 70-156 | LG 961 |
| 1022 | 98-056 | LG 512 |
| 10225 | 72-758 | LG 1042 |
| 10226 | 78-023 | LG 822 |
| 10227 | 78-022 | LG 827 |
| 10228 | 04-015 | LG 899 |
| 10231 | 55-284 | LG 992 |
| 10232 | 175-913 | LG 262 |
| 10232 | 75-913 | LG 291 |
| 10237 | 49-305 | LG 603 |
| 10238 | 65-224 | LG 341 |
| 10239 | 80-146 | LG 341 |
| 1024 | 198-052 | LG 389 |
| 10243 | 69-239-0 | |
| 10244 | 69-242-0 | |
| 10249 | 91-378 | LG 414 |

# 2019 Aftermarket X-Reference

## ROTARY

| PART No. | OREGON | Page |
|---|---|---|
| 1025 | 75-917 | LG 282 |
| 10250 | 72-165 | LG 1041 |
| 10251 | 75-232 | LG 281 |
| 10252 | 75-235 | LG 281 |
| 10252 | 75-667 | LG 282 |
| 10253 | 75-917 | LG 282 |
| 10254 | 75-957 | LG 282 |
| 1026 | 198-058 | LG 517 |
| 10260 | 75-364 | LG 304 |
| 10261 | 75-362 | LG 256 |
| 10262 | 33-714 | LG 918 |
| 10263 | 30-073 | LG 183 |
| 10264 | 45-048 | LG 854 |
| 10265 | 45-050 | LG 224 |
| 10269 | 30-439-1 | LG 190 |
| 10272 | 35-034 | LG 807 |
| 10284 | 91-079 | LG 485 |
| 10286 | 72-736 | LG 1045 |
| 10288 | 72-735 | LG 1045 |
| 10289 | 70-311 | LG 960 |
| 1029 | 198-063 | LG 513 |
| 1029 | 98-085 | LG 561 |
| 10290 | 70-399 | LG 960 |
| 10291 | 90-348 | LG 484 |
| 10292 | 90-354 | LG 488 |
| 10293 | 33-417 | LG 731 |
| 10294 | 33-247 | LG 731 |
| 10295 | 33-419 | LG 732 |
| 10296 | 33-418 | LG 731 |
| 10297 | 33-400 | LG 732 |
| 1030 | 98-084 | LG 512 |
| 10301 | 72-050 | LG 1039 |
| 10301 | 72-051 | LG 1039 |
| 10302 | 30-441 | LG 202 |
| 10303 | 45-227 | LG 234 |
| 10304 | 30-076 | LG 188 |
| 10305 | 30-921 | LG 202 |
| 10306 | 175-164 | LG 262 |
| 10306 | 75-164 | LG 262 |
| 1031 | 198-153 | LG 520 |
| 10311 | 30-955 | LG 212 |
| 10313 | 30-057 | LG 200 |
| 10315 | 21-055 | LG 981 |
| 10317 | 75-215 | LG 313 |
| 10319 | 75-632 | LG 314 |
| 1032 | 198-059 | LG 403 |
| 10323 | 115-212 | LG 325 |
| 10324 | 31-057 | LG 930 |
| 10325 | 31-064 | LG 931 |
| 1034 | 98-064-1 | LG 514 |
| 10343 | 33-502 | LG 743 |
| 10348 | 07-102 | LG 774 |
| 10352 | 07-110 | LG 776 |
| 10353 | 82-318 | LG 884 |
| 10357 | 81-010 | |
| 10361 | 92-139 | LG 398 |
| 10362 | 98-091 | LG 516 |
| 10363 | 98-071 | LG 411 |
| 10365 | 75-682 | LG 258 |
| 10367 | 92-139 | LG 398 |
| 10369 | 175-677 | LG 304 |
| 10369 | 75-677 | LG 304 |
| 1037 | 98-054 | LG 574 |
| 10371 | 90-205 | LG 501 |
| 10372 | 90-207 | LG 472 |
| 10373 | 90-208 | LG 502 |
| 10377 | 95-068 | LG 376 |
| 10379 | 31-060 | LG 922 |
| 1038 | 98-069 | LG 404 |
| 10383 | 91-144 | LG 454 |
| 10384 | 31-056 | LG 927 |
| 10385 | 31-061 | LG 922 |
| 10387 | 75-373 | LG 322 |
| 10392 | 55-187 | LG 631 |
| 10393 | 55-188 | LG 631 |
| 10394 | 55-189 | LG 631 |
| 10397 | 78-006 | LG 828 |
| 10398 | 30-706 | LG 201 |
| 10402 | 75-052 | LG 313 |
| 10403 | 75-904 | LG 313 |
| 10405 | 75-370 | LG 257 |
| 10411 | 75-270 | LG 257 |
| 10414 | 78-121 | LG 827 |
| 1043 | 95-024 | LG 465 |
| 10430 | 58-119 | LG 960 |
| 10434 | 75-979 | LG 255 |
| 10435 | 75-978 | LG 293 |
| 10436 | 175-919 | LG 293 |
| 10436 | 75-919 | LG 293 |
| 10437 | 175-992 | LG 293 |
| 10437 | 75-992 | LG 293 |
| 1044 | 95-023 | LG 380 |
| 10454 | 30-077 | LG 188 |
| 10457 | 49-997 | LG 628 |
| 10461 | 72-725 | LG 1044 |
| 10462 | 33-348 | LG 785 |
| 10463 | 49-996 | LG 629 |
| 10464 | 31-108 | LG 931 |
| 10465 | 31-103 | LG 933 |
| 10468 | 07-022 | LG 764 |
| 10469 | 31-049 | LG 923 |
| 10471 | 49-146 | LG 603 |
| 10473 | 31-109 | LG 929 |
| 10474 | 49-913 | LG 624 |
| 10475 | 49-997 | LG 628 |
| 10476 | 49-912 | LG 624 |
| 10477 | 30-438 | LG 196 |
| 10478 | 07-409 | LG 766 |
| 10479 | 49-995 | LG 625 |
| 10480 | 49-143 | LG 752 |
| 10481 | 50-420 | LG 751 |
| 10482 | 50-421 | LG 751 |
| 10483 | 50-422 | LG 751 |
| 10484 | 07-393 | LG 765 |
| 10485 | 75-976 | LG 292 |
| 10486 | 75-918 | LG 293 |
| 10561 | 33-730 | LG 917 |
| 10563 | 75-658 | LG 275 |
| 1060 | 99-117 | LG 556 |
| 10626 | 75-242 | LG 288 |
| 10627 | 75-243 | LG 288 |
| 10634 | 191-108 | LG 484 |
| 10635 | 191-139 | LG 491 |
| 10636 | 91-073 | LG 512 |
| 1065 | 91-244 | LG 450 |
| 1066 | 91-242 | LG 371 |
| 10662 | 40-141 | LG 585 |
| 10667 | 91-264 | LG 473 |
| 10673 | 33-407 | LG 732 |
| 10674 | 33-735 | LG 917 |
| 10677 | 33-337 | LG 730 |
| 10678 | 30-436 | LG 194 |
| 10679 | 30-437 | LG 192 |
| 10680 | 30-703 | LG 192 |
| 10682 | 55-337 | LG 986 |
| 10683 | 33-729 | LG 917 |
| 10684 | 46-004 | LG 707 |
| 10686 | 46-050 | LG 711 |
| 10687 | 60-021 | LG 706 |
| 10688 | 46-320 | LG 707 |
| 10690 | 60-025-0 | LG 716 |
| 10691 | 60-026-0 | LG 716 |
| 10692 | 60-030-0 | LG 716 |
| 10693 | 60-031-0 | LG 716 |
| 10694 | 60-032-0 | LG 716 |
| 10695 | 60-033-0 | LG 716 |
| 10697 | 46-327 | LG 717 |
| 10699 | 07-156 | LG 761 |
| 10702 | 40-140 | LG 584 |
| 10709 | 33-740 | LG 916 |
| 10711 | 72-736 | LG 1045 |
| 10712 | 40-140 | LG 584 |
| 10714 | 72-135 | LG 1040 |
| 10715 | 72-161 | LG 1038 |
| 10717 | 75-236 | LG 282 |
| 10719 | 91-181 | LG 495 |
| 10720 | 91-308 | LG 467 |
| 10723 | 33-377 | LG 943 |
| 10725 | 70-163 | LG 964 |
| 10726 | 70-164 | LG 964 |
| 10731 | 70-158 | LG 964 |
| 10737 | 78-133 | LG 831 |
| 10738 | 34-102 | LG 830 |
| 10741 | 78-118-0 | LG 830 |
| 10742 | 72-725 | LG 1044 |
| 10745 | 75-669 | LG 284 |
| 10749 | 75-298 | LG 295 |
| 10750 | 75-672 | LG 294 |
| 10751 | 75-246 | LG 295 |
| 10754 | 36-028 | LG 750 |
| 10755 | 36-027 | LG 750 |
| 10756 | 58-068 | LG 959 |
| 10758 | 72-458 | LG 1031 |
| 10759 | 30-119 | LG 191 |
| 10771 | 33-430 | LG 729 |
| 10772 | 33-431 | LG 729 |
| 10782 | 75-659 | LG 275 |
| 10783 | 75-655 | LG 274 |
| 10784 | 75-656 | LG 274 |
| 10785 | 82-346 | LG 885 |
| 10806 | 33-728 | LG 917 |
| 10814 | 75-661 | LG 277 |
| 10817 | 46-321 | LG 707 |
| 10820 | 44-339 | LG 841 |
| 10821 | 75-685 | LG 324 |
| 10822 | 75-686 | LG 324 |
| 10823 | 75-687 | LG 297 |
| 10824 | 75-688 | LG 297 |
| 10830 | 75-811 | LG 254 |
| 10831 | 175-673 | LG 305 |
| 10831 | 75-673 | LG 305 |
| 10832 | 75-679 | LG 309 |
| 10833 | 75-709 | LG 305 |
| 10844 | 75-663 | LG 279 |
| 10845 | 75-662 | LG 258 |
| 10846 | 75-665 | LG 279 |
| 10847 | 75-664 | LG 279 |
| 10852 | 15-017 | LG 279 |
| 10858 | 31-023 | LG 933 |
| 10859 | 33-013 | LG 949 |
| 10861 | 15-018 | LG 279 |
| 10863 | 49-914 | LG 165 |
| 10864 | 50-454 | LG 756 |
| 10865 | 33-215 | LG 866 |
| 10867 | 30-030 | LG 218 |
| 10868 | 31-034 | LG 933 |
| 10871 | 31-912 | LG 929 |
| 10872 | 82-347 | LG 885 |
| 10875 | 07-700 | LG 767 |
| 10877 | 33-029-1 | LG 927 |
| 10879 | 30-704 | LG 194 |
| 10881 | 30-327 | LG 199 |
| 10885 | 75-178 | LG 281 |
| 10886 | 75-114 | LG 281 |
| 10891 | 60-525 | LG 702 |
| 10892 | 72-728 | LG 1044 |
| 10892 | 72-729 | LG 1044 |
| 10893 | 75-671 | LG 287 |
| 10894 | 75-670 | LG 288 |
| 10901 | 115-208 | LG 275 |
| 10906 | 07-600 | LG 770 |
| 10914 | 75-715 | LG 313 |
| 1092 | 99-112 | LG 556 |
| 10928 | 94-051 | LG 570 |
| 10929 | 94-322 | LG 520 |
| 10930 | 91-628 | LG 387 |
| 10931 | 49-304 | LG 603 |
| 10932 | 49-222 | LG 604 |
| 10933 | 49-147 | LG 603 |
| 10934 | 49-037 | LG 622 |
| 10935 | 49-145 | LG 603 |
| 10936 | 49-221 | LG 604 |
| 10937 | 49-148 | LG 603 |
| 10938 | 49-149 | LG 604 |
| 10939 | 49-146 | LG 603 |
| 10944 | 49-210 | LG 628 |
| 10947 | 49-229 | LG 609 |
| 10948 | 49-133 | LG 609 |
| 10951 | 60-001 | LG 708 |
| 10952 | 69-259-0 | |
| 10953 | 69-260-0 | |
| 10954 | 69-261-0 | |
| 10955 | 69-262-0 | |
| 10957 | 65-204 | LG 342 |
| 10959 | 71-283 | LG 957 |
| 10963 | 30-137 | LG 214 |
| 10966 | 78-104 | LG 823 |
| 1098 | 99-113 | LG 528 |
| 10982 | 33-738 | LG 921 |
| 10983 | 31-050 | LG 924 |
| 10996 | 91-536 | LG 395 |
| 1100 | 91-500 | LG 416 |
| 11014 | 82-015 | |
| 11016 | 07-602 | LG 770 |

X

## ROTARY

| PART No. | OREGON | Page |
|---|---|---|
| 11017 | 75-977 | LG 310 |
| 11019 | 175-676 | LG 304 |
| 11019 | 75-676 | LG 304 |
| 11021 | 72-113 | LG 1035 |
| 11022 | 33-768-0 | LG 926 |
| 11026 | 75-703 | LG 295 |
| 11028 | 75-708 | LG 295 |
| 11031 | 45-111 | LG 939 |
| 11032 | 75-819 | LG 292 |
| 11033 | 91-558 | LG 448 |
| 11034 | 175-810 | LG 263 |
| 11034 | 75-810 | LG 257 |
| 11037 | 82-355 | LG 892 |
| 11042 | 30-702 | LG 185 |
| 11059 | 70-145 | LG 959 |
| 11063 | 72-756 | LG 1046 |
| 11070 | 33-118-1 | LG 733 |
| 11071 | 33-119-1 | LG 734 |
| 11072 | 33-184 | LG 737 |
| 11073 | 33-127 | LG 737 |
| 11074 | 33-189 | LG 740 |
| 11075 | 33-137 | LG 737 |
| 11077 | 50-435 | LG 747 |
| 11130 | 75-899 | LG 263 |
| 11133 | 33-135 | LG 737 |
| 11139 | 91-311 | LG 439 |
| 11140 | 49-078 | LG 603 |
| 11144 | 78-050 | LG 831 |
| 11164 | 50-603 | LG 595 |
| 11166 | 50-607 | LG 595 |
| 11177 | 50-619 | LG 595 |
| 11178 | 50-620 | LG 595 |
| 11179 | 50-621 | LG 595 |
| 11180 | 195-072 | LG 530 |
| 11198 | 19-031 | LG 983 |
| 11199 | 19-032 | LG 983 |
| 11200 | 19-033 | LG 983 |
| 11201 | 19-034 | LG 983 |
| 11205 | 30-966 | LG 203 |
| 11206 | 82-356 | LG 893 |
| 11207 | 34-109 | LG 831 |
| 11217 | 72-737 | LG 1045 |
| 11219 | 33-099 | LG 946 |
| 11224 | 92-031 | LG 433 |
| 11229 | 92-033 | LG 442 |
| 11230 | 30-705 | LG 200 |
| 11231 | 92-029 | LG 435 |
| 11232 | 98-628 | LG 389 |
| 11233 | 198-153 | LG 520 |
| 11233 | 98-629 | LG 412 |
| 11234 | 97-604 | LG 525 |
| 11237 | 33-136 | LG 737 |
| 11238 | 99-131 | LG 555 |
| 11239 | 99-117 | LG 556 |
| 1124 | 97-105 | LG 523 |
| 11240 | 92-026 | LG 435 |
| 11241 | 92-027 | LG 432 |
| 11242 | 92-028 | LG 433 |
| 11244 | 92-084 | LG 442 |
| 11248 | 92-031 | LG 433 |
| 11249 | 92-025 | LG 440 |
| 11250 | 92-015 | LG 407 |
| 11267 | 96-322 | LG 567 |
| 1127 | 91-389 | LG 538 |
| 11274 | 82-332 | LG 891 |
| 11278 | 82-333 | LG 892 |
| 11283 | 36-041 | LG 754 |
| 11286 | 36-042 | LG 754 |
| 11290 | 36-043 | LG 754 |
| 11296 | 36-044 | LG 754 |
| 11299 | 36-045 | LG 754 |
| 11302 | 36-046 | LG 754 |
| 1131 | 79-724 | LG 556 |
| 11330 | 31-635 | LG 937 |
| 1136 | 79-728 | LG 556 |
| 1137 | 40-408 | LG 589 |
| 1138 | 40-402 | LG 589 |
| 1139 | 40-411 | LG 589 |
| 1143 | 40-403 | LG 589 |
| 11444 | 33-115 | LG 738 |
| 11445 | 33-188 | LG 738 |
| 1145 | 40-502 | LG 586 |
| 11458 | 42-007 | LG 744 |
| 11468 | 75-207 | LG 256 |
| 11469 | 96-749 | LG 433 |
| 1147 | 40-807 | LG 585 |
| 11470 | 33-002 | LG 946 |
| 11473 | 30-443 | LG 218 |
| 11474 | 09-260 | LG 870 |
| 11475 | 91-058 | LG 411 |
| 11476 | 98-083 | LG 404 |
| 11477 | 91-057 | LG 409 |
| 11478 | 98-082 | LG 513 |
| 11479 | 98-087 | LG 407 |
| 1148 | 40-409 | LG 585 |
| 11480 | 198-086 | LG 565 |
| 11482 | 175-995 | LG 303 |
| 11482 | 75-995 | LG 303 |
| 11483 | 175-993 | LG 303 |
| 11483 | 75-993 | LG 303 |
| 11488 | 33-741 | LG 917 |
| 1149 | 40-110 | LG 584 |
| 11491 | 92-103 | LG 487 |
| 11495 | 92-030 | LG 567 |
| 11496 | 92-082 | LG 433 |
| 11498 | 92-057 | LG 442 |
| 11501 | 392-057 | LG 443 |
| 11504 | 75-292 | LG 281 |
| 11505 | 30-130 | LG 205 |
| 11506 | 98-087 | LG 407 |
| 11507 | 198-086 | LG 565 |
| 11510 | 49-088-0 | LG 631 |
| 11512 | 46-310 | LG 713 |
| 11513 | 46-316 | LG 707 |
| 11522 | 72-723 | LG 1043 |
| 11547 | 30-919 | LG 188 |
| 11548 | 02-099 | LG 722 |
| 11549 | 07-154 | LG 761 |
| 11555 | 97-021 | LG 524 |
| 11556 | 96-318 | LG 414 |
| 11557 | 92-044 | LG 471 |
| 11558 | 96-363 | LG 499 |
| 11564 | 98-081 | LG 406 |
| 11579 | 31-006 | LG 935 |
| 11580 | 30-156 | LG 213 |
| 11587 | 30-155 | LG 213 |
| 11588 | 33-180 | LG 949 |
| 11590 | 82-026 | LG 872 |
| 11591 | 82-126 | LG 873 |
| 11593 | 192-106 | LG 491 |
| 11594 | 92-615 | LG 491 |
| 11595 | 92-104 | LG 485 |
| 11596 | 92-616 | LG 485 |
| 11632 | 78-054 | LG 824 |
| 11633 | 78-052 | LG 824 |
| 11634 | 78-013 | LG 825 |
| 11635 | 78-014 | LG 825 |
| 11640 | 60-028 | LG 718 |
| 11643 | 40-707 | LG 590 |
| 11645 | 40-707 | LG 590 |
| 11647 | 40-703 | LG 590 |
| 11659 | 55-079 | LG 214 |
| 11660 | 175-813 | LG 276 |
| 11660 | 75-813 | LG 276 |
| 11661 | 175-994 | LG 304 |
| 11661 | 75-994 | LG 304 |
| 11663 | 91-482 | LG 434 |
| 11664 | 33-117 | LG 733 |
| 1167 | 65-206 | LG 342 |
| 1170 | 82-514 | LG 869 |
| 1171 | 82-677 | LG 903 |
| 11719 | 98-072 | LG 408 |
| 1172 | 82-493 | LG 869 |
| 11721 | 92-045 | LG 474 |
| 11723 | 31-732 | LG 937 |
| 11724 | 31-740 | LG 937 |
| 11725 | 31-742 | LG 937 |
| 11726 | 31-750 | LG 937 |
| 11727 | 31-752 | LG 937 |
| 11728 | 31-760 | LG 937 |
| 11738 | 31-140 | LG 937 |
| 11739 | 31-142 | LG 937 |
| 11740 | 31-150 | LG 937 |
| 11741 | 31-152 | LG 937 |
| 11742 | 31-160 | LG 937 |
| 11757 | 55-286 | LG 992 |
| 11769 | 492-726 | LG 436 |
| 11770 | 492-726 | LG 436 |
| 11773 | 492-731 | LG 436 |
| 11776 | 392-206 | LG 436 |
| 1178 | 65-229 | LG 342 |
| 11788 | 392-203 | LG 442 |
| 11792 | 392-204 | LG 443 |
| 11793 | 30-064 | LG 194 |
| 11795 | 30-087 | LG 182 |
| 11805 | 98-080 | LG 512 |
| 11806 | 30-956 | LG 216 |
| 11809 | 70-394 | LG 958 |
| 11810 | 92-039 | LG 470 |
| 11812 | 02-405 | LG 790 |
| 11813 | 07-066 | LG 778 |
| 11819 | 72-119 | LG 1040 |
| 1182 | 80-122 | LG 340 |
| 11820 | 75-812 | LG 275 |
| 11821 | 94-068 | LG 441 |
| 11828 | 33-125-1 | LG 736 |
| 11829 | 33-126-1 | LG 736 |
| 11830 | 55-406-0 | LG 995 |
| 11835 | 45-064 | LG 236 |
| 11841 | 30-055 | LG 204 |
| 11842 | 30-708 | LG 204 |
| 11843 | 175-706 | LG 276 |
| 11843 | 75-706 | LG 256 |
| 11844 | 175-710 | LG 276 |
| 11844 | 75-710 | LG 257 |
| 11845 | 175-714 | LG 276 |
| 11845 | 75-714 | LG 276 |
| 11846 | 75-600 | LG 276 |
| 11847 | 175-814 | LG 276 |
| 11847 | 75-814 | LG 276 |
| 11848 | 15-025 | LG 255 |
| 11849 | 75-823 | LG 254 |
| 11852 | 57-016 | LG 677 |
| 11853 | 75-193 | LG 269 |
| 11856 | 92-042 | LG 472 |
| 11858 | 33-114 | LG 734 |
| 11859 | 33-133 | LG 736 |
| 11861 | 75-892 | LG 255 |
| 11863 | 115-205 | LG 258 |
| 11864 | 175-894 | LG 291 |
| 11864 | 75-894 | LG 263 |
| 11865 | 30-056 | LG 208 |
| 11867 | 175-895 | LG 263 |
| 11867 | 75-895 | LG 263 |
| 11868 | 99-134 | LG 527 |
| 1191 | 09-802 | LG 233 |
| 11958 | 49-214 | LG 624 |
| 11959 | 49-363 | LG 624 |
| 11961 | 82-411 | LG 878 |
| 11962 | 82-403 | LG 879 |
| 11963 | 82-412 | LG 53 |
| 11964 | 82-359 | LG 893 |
| 11988 | 55-284 | LG 992 |
| 11989 | 49-208 | LG 756 |
| 11990 | 49-193 | LG 756 |
| 11991 | 49-207 | LG 756 |
| 11996 | 76-025 | LG 941 |
| 11997 | 75-134 | LG 275 |
| 12001 | 30-712 | LG 205 |
| 12015 | 72-020 | LG 1039 |
| 12018 | 72-050 | LG 1039 |
| 12018 | 72-164 | LG 1040 |
| 12019 | 31-070 | LG 922 |
| 12043 | 49-246 | LG 627 |
| 12048 | 70-161 | LG 964 |
| 12060 | 72-021 | LG 1040 |
| 12065 | 33-733 | LG 917 |
| 12066 | 82-517 | LG 896 |
| 12067 | 75-637 | LG 253 |
| 12068 | 75-641 | LG 314 |
| 12069 | 75-642 | LG 314 |
| 12071 | 75-644 | LG 314 |
| 12072 | 75-645 | LG 314 |
| 12073 | 75-646 | LG 257 |
| 12077 | 175-295 | LG 295 |
| 12077 | 75-295 | LG 295 |
| 12078 | 175-300 | LG 295 |
| 12078 | 75-300 | LG 295 |
| 12079 | 31-075 | LG 923 |
| 12080 | 30-123 | LG 183 |
| 12083 | 33-521 | LG 785 |
| 12085 | 15-047 | |
| 12087 | 33-734 | LG 917 |
| 12093 | 27-001 | |

# 2019 Aftermarket X-Reference

## ROTARY

| PART No. | OREGON | Page |
|---|---|---|
| 12094 | 15-123 | LG 284 |
| 12096 | 15-124 | LG 284 |
| 12097 | 15-125 | LG 284 |
| 12100 | 15-127 | LG 284 |
| 12105 | 21-355 | LG 981 |
| 12107 | 15-128 | LG 284 |
| 12114 | 33-121 | LG 734 |
| 12119 | 45-263 | LG 224 |
| 12121 | 95-605 | LG 463 |
| 12122 | 95-084 | LG 494 |
| 12123 | 95-087 | LG 460 |
| 12124 | 95-085 | LG 462 |
| 12125 | 95-086 | LG 425 |
| 12127 | 07-318 | LG 771 |
| 12135 | 21-980 | LG 981 |
| 12136 | 21-995 | LG 981 |
| 12137 | 21-905 | LG 981 |
| 12138 | 21-930 | LG 981 |
| 12139 | 21-480 | LG 981 |
| 12140 | 21-495 | LG 981 |
| 12141 | 21-405 | LG 981 |
| 12142 | 21-430 | LG 981 |
| 12143 | 21-455 | LG 981 |
| 12149 | 21-880 | LG 981 |
| 12150 | 21-895 | LG 981 |
| 12151 | 21-805 | LG 981 |
| 12152 | 21-830 | LG 981 |
| 12153 | 21-855 | LG 981 |
| 12154 | 21-080 | LG 981 |
| 12155 | 21-095 | LG 981 |
| 12156 | 21-005 | LG 981 |
| 12157 | 21-030 | LG 981 |
| 12165 | 20-020 | LG 979 |
| 12166 | 20-021 | LG 979 |
| 12167 | 20-022 | LG 979 |
| 12175 | 20-026 | LG 979 |
| 12176 | 20-027 | LG 979 |
| 12177 | 20-028 | LG 979 |
| 12179 | 20-023 | LG 979 |
| 12180 | 20-024 | LG 979 |
| 12181 | 20-025 | LG 979 |
| 12184 | 69-171 | LG 981 |
| 12185 | 69-172 | LG 981 |
| 12188 | 21-480 | LG 981 |
| 12189 | 21-495 | LG 981 |
| 12190 | 21-405 | LG 981 |
| 12191 | 21-430 | LG 981 |
| 12192 | 21-880 | LG 981 |
| 12193 | 21-895 | LG 981 |
| 12194 | 21-805 | LG 981 |
| 12195 | 21-830 | LG 981 |
| 12196 | 21-080 | LG 981 |
| 12197 | 21-095 | LG 981 |
| 12198 | 21-005 | LG 981 |
| 12199 | 21-030 | LG 981 |
| 12219 | 82-408 | LG 878 |
| 12220 | 33-243 | LG 786 |
| 12227 | 33-128-1 | LG 741 |
| 12236 | 82-401 | LG 879 |
| 12237 | 115-204 | LG 282 |
| 12240 | 95-099 | LG 400 |
| 12241 | 82-021 | LG 884 |
| 12242 | 195-070 | LG 469 |
| 12247 | 33-139 | LG 736 |
| 12249 | 15-046 | LG 314 |
| 12251 | 92-054 | LG 434 |
| 1226 | 82-306 | LG 874 |
| 12261 | 33-137 | LG 737 |
| 12263 | 49-916 | LG 629 |
| 1227 | 82-307-0 | LG 874 |
| 12272 | 30-449 | LG 188 |
| 12273 | 94-059 | LG 564 |
| 12275 | 34-066 | LG 832 |
| 12276 | 78-046 | LG 826 |
| 12277 | 34-201 | LG 822 |
| 12282 | 30-145 | LG 184 |
| 12283 | 30-975 | LG 188 |
| 12286 | 15-022 | LG 292 |
| 12291 | 55-987 | |
| 12293 | 49-223 | LG 604 |
| 12297 | 78-026 | LG 822 |
| 12304 | 49-235 | LG 625 |
| 12319 | 75-756 | LG 279 |
| 12320 | 75-755 | LG 258 |
| 12322 | 15-019 | LG 279 |
| 12329 | 31-062 | LG 922 |
| 12330 | 31-065 | LG 922 |
| 12361 | 45-831 | LG 234 |
| 12362 | 96-382 | LG 564 |
| 12368 | 31-068 | LG 922 |
| 12371 | 75-629 | LG 314 |
| 12373 | 175-299 | LG 295 |
| 12373 | 75-299 | LG 295 |
| 12377 | 30-121 | LG 190 |
| 12379 | 85-052 | LG 907 |
| 12380 | 92-110 | LG 491 |
| 12382 | 75-886 | LG 276 |
| 12384 | 55-284 | LG 992 |
| 12405 | 75-231 | LG 281 |
| 12409 | 42-005 | LG 744 |
| 12415 | 75-757 | LG 256 |
| 12416 | 75-759 | LG 279 |
| 12419 | 78-025 | LG 829 |
| 12424 | 33-104 | LG 735 |
| 12425 | 15-005 | LG 282 |
| 12427 | 78-112 | LG 829 |
| 12429 | 75-158 | LG 251 |
| 12448 | 82-516 | LG 896 |
| 12461 | 175-800 | |
| 12461 | 75-800 | LG 257 |
| 12470 | 49-847 | LG 610 |
| 12471 | 49-849 | LG 610 |
| 12478 | 70-396 | LG 961 |
| 12479 | 30-975 | LG 188 |
| 12480 | 75-914 | LG 291 |
| 12484 | 72-446 | LG 1030 |
| 12489 | 15-026 | LG 277 |
| 12494 | 33-772 | LG 916 |
| 12495 | 82-360 | LG 893 |
| 12497 | 30-149 | LG 211 |
| 12515 | 07-063 | LG 775 |
| 12517 | 33-153 | LG 737 |
| 12529 | 73-562-0 | LG 842 |
| 12533 | 73-819 | LG 843 |
| 12559 | 75-802 | LG 296 |
| 12560 | 175-803 | LG 296 |
| 12560 | 75-803 | LG 258 |
| 12561 | 55-249 | LG 215 |
| 12562 | 92-109 | LG 489 |
| 12563 | 195-019 | LG 466 |
| 12570 | 55-243 | LG 215 |
| 12571 | 55-248 | LG 215 |
| 12572 | 55-246 | LG 214 |
| 12573 | 55-262 | LG 215 |
| 12598 | 07-127 | LG 764 |
| 12605 | 07-126 | LG 764 |
| 12609 | 175-815 | LG 277 |
| 12609 | 75-815 | LG 277 |
| 12610 | 15-013 | LG 256 |
| 12612 | 82-519 | LG 897 |
| 12613 | 78-047 | LG 832 |
| 12619 | 07-160 | LG 774 |
| 1262 | 78-675 | LG 839 |
| 12621 | 33-134 | LG 736 |
| 1263 | 78-677 | LG 839 |
| 12641 | 15-114 | LG 282 |
| 12642 | 49-443 | LG 630 |
| 12643 | 92-114 | LG 493 |
| 12644 | 78-056 | LG 825 |
| 12648 | 72-025 | LG 1039 |
| 12649 | 96-607 | LG 571 |
| 12654 | 33-117 | LG 733 |
| 12655 | 31-050 | LG 924 |
| 12656 | 31-047 | LG 925 |
| 12657 | 31-116 | LG 925 |
| 1266 | 45-620 | LG 225 |
| 12661 | 78-053 | LG 824 |
| 12667 | 75-716 | LG 276 |
| 12668 | 82-022 | LG 886 |
| 12671 | 70-144 | LG 959 |
| 12673 | 30-167 | LG 184 |
| 12674 | 30-159 | LG 205 |
| 12675 | 78-065 | LG 832 |
| 1268 | 35-023 | LG 806 |
| 12682 | 78-066 | LG 838 |
| 12685 | 33-376 | LG 942 |
| 12686 | 15-024 | LG 292 |
| 12687 | 75-225 | LG 322 |
| 1269 | 35-012 | LG 806 |
| 12696 | 78-022 | LG 827 |
| 12697 | 33-744 | LG 918 |
| 1270 | 35-001 | LG 806 |
| 1270 | 35-007 | LG 806 |
| 12707 | 31-041 | LG 932 |
| 12710 | 33-742 | |
| 12714 | 89-001 | LG 590 |
| 12716 | 30-333 | LG 216 |
| 12718 | 75-648 | LG 257 |
| 12719 | 75-649 | LG 258 |
| 1272 | 35-023 | LG 806 |
| 12721 | 96-370 | LG 533 |
| 12728 | 65-002 | LG 340 |
| 12729 | 75-887 | LG 323 |
| 12730 | 75-888 | LG 322 |
| 12732 | 95-621 | LG 402 |
| 12733 | 30-445 | LG 189 |
| 1274 | 35-003 | LG 809 |
| 12749 | 81-015 | LG 802 |
| 1275 | 35-005 | LG 806 |
| 12752 | 33-152 | LG 942 |
| 12758 | 30-164 | LG 200 |
| 12759 | 15-009 | LG 296 |
| 12760 | 15-010 | LG 296 |
| 12762 | 33-083 | LG 947 |
| 12764 | 70-403 | LG 958 |
| 12765 | 58-362 | LG 958 |
| 12765 | 70-404 | LG 958 |
| 12767 | 70-405 | LG 958 |
| 12768 | 15-112 | LG 305 |
| 12769 | 75-816 | LG 257 |
| 1277 | 35-006 | LG 808 |
| 12773 | 49-906 | LG 615 |
| 12778 | 82-328 | LG 891 |
| 1278 | 35-004 | LG 806 |
| 12783 | 15-004 | LG 282 |
| 12784 | 69-034 | LG 217 |
| 12786 | 30-157 | LG 201 |
| 12787 | 30-158 | LG 201 |
| 1279 | 35-008 | LG 808 |
| 12790 | 15-027 | LG 306 |
| 12791 | 15-028 | LG 277 |
| 12797 | 30-185 | LG 203 |
| 12801 | 30-963 | LG 195 |
| 12802 | 33-411 | LG 732 |
| 12807 | 82-322 | LG 883 |
| 12808 | 82-323 | LG 883 |
| 12809 | 91-938 | LG 514 |
| 12813 | 49-219 | LG 625 |
| 12820 | 21-000 | LG 985 |
| 12824 | 75-631 | LG 314 |
| 1283 | 35-014 | LG 806 |
| 1285 | 33-210 | LG 867 |
| 12852 | 91-610 | LG 554 |
| 12856 | 45-075 | LG 241 |
| 12857 | 45-074 | LG 242 |
| 12861 | 83-403 | LG 818 |
| 12862 | 83-404 | LG 818 |
| 12863 | 83-403 | LG 818 |
| 12864 | 83-402 | LG 817 |
| 12865 | 07-122 | LG 775 |
| 12867 | 15-016 | LG 323 |
| 12877 | 30-161 | LG 184 |
| 12883 | 82-405 | LG 878 |
| 12891 | 78-028 | LG 831 |
| 12892 | 115-029 | LG 255 |
| 12893 | 92-140 | LG 516 |
| 12894 | 30-448 | LG 188 |
| 12895 | 30-446 | LG 188 |
| 12909 | 98-094 | LG 514 |
| 1291 | 42-452 | LG 867 |
| 12910 | 82-359 | LG 893 |
| 12913 | 72-725 | LG 1044 |
| 12923 | 33-159 | LG 733 |
| 12926 | 85-044 | LG 906 |
| 12933 | 49-084 | LG 759 |
| 12964 | 30-122 | LG 183 |
| 12965 | 60-527 | LG 714 |
| 12967 | 82-409 | LG 878 |
| 12968 | 30-172 | LG 184 |
| 12972 | 82-518 | LG 897 |
| 12973 | 82-408 | LG 878 |
| 12974 | 95-074 | LG 533 |
| 1298 | 33-201 | LG 867 |
| 12980 | 33-122-1 | LG 734 |

## ROTARY

| PART No. | OREGON | Page |
|---|---|---|
| 12985 | 30-181 | LG 189 |
| 12995 | 92-116 | LG 500 |
| 12996 | 49-440 | LG 618 |
| 12998 | 49-883 | LG 618 |
| 1300 | 31-232 | LG 937 |
| 13001 | 82-402 | LG 879 |
| 13006 | 82-349 | LG 886 |
| 13009 | 82-674 | LG 904 |
| 1301 | 31-240 | LG 937 |
| 13016 | 93-601 | LG 432 |
| 13017 | 596-702 | LG 388 |
| 1302 | 31-242 | LG 937 |
| 13023 | 95-076 | LG 404 |
| 1303 | 31-250 | LG 937 |
| 1304 | 31-252 | LG 937 |
| 13042 | 73-059 | LG 850 |
| 13043 | 73-825 | LG 850 |
| 13049 | 30-139 | LG 183 |
| 1305 | 31-260 | LG 937 |
| 1308 | 31-540 | LG 937 |
| 1309 | 31-542 | LG 937 |
| 13094 | 81-020 | LG 803 |
| 13097 | 49-884 | LG 619 |
| 1310 | 31-550 | LG 937 |
| 13101 | 31-067 | LG 935 |
| 13103 | 49-978 | LG 609 |
| 13106 | 33-083 | LG 947 |
| 1311 | 31-552 | LG 937 |
| 13115 | 07-124 | LG 776 |
| 13116 | 07-407 | LG 767 |
| 13119 | 55-515 | LG 211 |
| 13129 | 96-362 | LG 570 |
| 13131 | 82-407 | LG 880 |
| 13132 | 30-170 | LG 198 |
| 13137 | 50-446 | |
| 13141 | 50-640 | LG 598 |
| 13142 | 50-641 | LG 598 |
| 13143 | 50-642 | LG 598 |
| 13146 | 50-646 | LG 598 |
| 13147 | 50-647 | LG 598 |
| 13148 | 50-649 | LG 598 |
| 13149 | 50-650 | LG 599 |
| 13150 | 50-651 | LG 599 |
| 13151 | 50-652 | LG 599 |
| 13152 | 50-653 | LG 599 |
| 13153 | 50-654 | LG 599 |
| 13154 | 50-655 | LG 600 |
| 13155 | 50-656 | LG 600 |
| 13160 | 30-853 | LG 213 |
| 13165 | 70-146 | LG 959 |
| 13170 | 73-043 | LG 847 |
| 13171 | 07-072 | LG 763 |
| 13172 | 31-093 | LG 932 |
| 1318 | 31-100 | LG 929 |
| 13185 | 49-904 | LG 614 |
| 13194 | 50-668 | LG 597 |
| 13195 | 50-670 | LG 597 |
| 13196 | 50-634 | LG 597 |
| 13197 | 50-669 | LG 597 |
| 13198 | 49-915 | LG 597 |
| 13199 | 50-637 | LG 597 |
| 1320 | 31-604 | LG 937 |
| 13202 | 50-636 | LG 596 |
| 13217 | 75-984 | LG 257 |
| 13220 | 82-044 | LG 879 |
| 13224 | 50-438 | LG 747 |
| 13225 | 76-042 | LG 939 |
| 13229 | 45-071 | LG 242 |
| 13231 | 49-700 | LG 605 |
| 13234 | 82-358 | LG 892 |
| 13237 | 83-302 | LG 816 |
| 13239 | 195-072 | LG 530 |
| 1324 | 43-404 | LG 928 |
| 13245 | 70-154 | LG 961 |
| 13248 | 33-093 | LG 946 |
| 1325 | 31-051 | LG 924 |
| 13251 | 15-023 | LG 256 |
| 13252 | 31-918 | LG 922 |
| 1326 | 43-400-0 | LG 936 |
| 13262 | 49-897 | LG 617 |
| 13263 | 49-882-0 | LG 613 |
| 13264 | 46-051 | LG 712 |
| 13265 | 49-420 | LG 606 |
| 13266 | 49-421 | LG 607 |
| 13267 | 49-422 | LG 607 |
| 13270 | 49-426 | LG 607 |
| 13271 | 49-427 | LG 607 |
| 13272 | 49-428 | LG 607 |
| 13273 | 49-429 | LG 607 |
| 13274 | 49-430 | LG 607 |
| 13275 | 49-432 | LG 607 |
| 13276 | 49-433 | LG 608 |
| 13278 | 33-089 | LG 946 |
| 13279 | 72-131 | LG 1041 |
| 13280 | 72-133 | LG 1040 |
| 13281 | 72-134 | LG 1040 |
| 13291 | 49-899 | LG 617 |
| 13292 | 49-823-0 | LG 618 |
| 13292 | 49-867 | LG 618 |
| 13293 | 49-898 | LG 618 |
| 13294 | 49-438 | LG 615 |
| 1330 | 31-908 | LG 929 |
| 13301 | 15-132 | LG 306 |
| 13338 | 33-526 | LG 928 |
| 13341 | 73-560 | LG 844 |
| 13346 | 73-564-0 | LG 843 |
| 13348 | 92-102 | LG 458 |
| 13350 | 60-108 | LG 703 |
| 13359 | 45-057 | LG 249 |
| 13360 | 51-014 | LG 941 |
| 13361 | 95-077 | LG 461 |
| 13365 | 49-825 | LG 606 |
| 13365 | 49-891-0 | LG 617 |
| 1337 | 23-595 | LG 983 |
| 13371 | 51-223 | LG 726 |
| 13372 | 51-224 | LG 726 |
| 13374 | 4998I | |
| 13375 | 55-294 | LG 986 |
| 13377 | 55-265 | LG 986 |
| 13391 | 49-274 | LG 614 |
| 13399 | 72-169 | LG 1033 |
| 13402 | 70-422 | LG 964 |
| 13409 | 78-098 | LG 832 |
| 13414 | 45-234 | LG 224 |
| 13415 | 49-281 | LG 613 |
| 13418 | 45-258 | LG 224 |
| 13420 | 49-287 | LG 620 |
| 13429 | 4205M | LG 761 |
| 13430 | 46-335 | LG 719 |
| 13431 | 46-334 | LG 719 |
| 1344 | 23-580 | LG 983 |
| 13449 | 41-920 | LG 1014 |
| 1345 | 02-861 | LG 766 |
| 13455 | 49-209 | LG 625 |
| 13457 | 45-117 | LG 938 |
| 1346 | 02-860 | LG 766 |
| 13463 | 91-532 | LG 448 |
| 13464 | 91-531 | LG 393 |
| 1347 | 07-400 | LG 767 |
| 13470 | 48-232 | LG 724 |
| 1348 | 07-001 | LG 765 |
| 13481 | 99-132 | LG 539 |
| 13482 | 99-133 | LG 542 |
| 13488 | 49-859 | LG 616 |
| 13489 | 49-894 | LG 619 |
| 1349 | 07-100 | LG 774 |
| 13490 | 49-852 | LG 611 |
| 13505 | 75-906 | LG 251 |
| 13506 | 75-983 | LG 862 |
| 13507 | 75-909 | LG 251 |
| 13508 | 75-908 | LG 265 |
| 13509 | 75-907 | LG 264 |
| 1351 | 07-016 | LG 762 |
| 13510 | 50-441 | LG 748 |
| 13514 | 50-555 | LG 753 |
| 13517 | 50-426 | LG 753 |
| 13518 | 50-423 | LG 753 |
| 13520 | 50-425 | LG 753 |
| 13524 | 49-314 | LG 910 |
| 13526 | 50-408 | LG 745 |
| 13531 | 55-008 | LG 771 |
| 13532 | 31-094 | LG 932 |
| 13537 | 49-219 | LG 625 |
| 13569 | 15-137 | LG 323 |
| 1357 | 07-102 | LG 774 |
| 13570 | 15-138 | LG 323 |
| 13571 | 15-139 | LG 323 |
| 13572 | 15-140 | LG 323 |
| 13573 | 15-141 | LG 323 |
| 13578 | 07-450 | LG 761 |
| 1358 | 07-103 | LG 775 |
| 1358 | 07-332 | LG 776 |
| 13586 | 56-022 | LG 686 |
| 1359 | 07-303 | LG 770 |
| 13597 | 55-299 | LG 986 |
| 13598 | 55-297 | LG 986 |
| 13599 | 55-344 | LG 986 |
| 13600 | 55-336 | LG 986 |
| 13601 | 55-339 | LG 986 |
| 13602 | 55-349 | LG 986 |
| 13603 | 55-348 | LG 986 |
| 13605 | 85-029 | LG 909 |
| 13620 | 82-675 | LG 904 |
| 13621 | 82-676 | LG 904 |
| 13622 | 78-045 | LG 828 |
| 13625 | 35-050 | LG 809 |
| 13631 | 82-054 | LG 898 |
| 13641 | 30-916 | LG 185 |
| 13644 | 30-851 | LG 184 |
| 13650 | 50-450 | LG 753 |
| 13652 | 07-331 | LG 776 |
| 1368 | 23-530 | LG 983 |
| 1369 | 30-923 | LG 186 |
| 1370 | 30-906 | LG 185 |
| 1371 | 30-907 | LG 186 |
| 1372 | 30-908 | LG 185 |
| 1373 | 30-909 | LG 186 |
| 1374 | 30-044 | LG 179 |
| 1375 | 30-910 | LG 186 |
| 1376 | 30-913 | LG 185 |
| 1377 | 30-941 | LG 219 |
| 1379 | 30-949 | LG 209 |
| 1380 | 30-950 | LG 209 |
| 1381 | 30-205 | LG 219 |
| 1382 | 30-083 | LG 219 |
| 1384 | 30-081 | LG 205 |
| 1385 | 30-082 | LG 205 |
| 1386 | 30-080 | LG 205 |
| 1388 | 30-093 | LG 206 |
| 1389 | 30-095 | LG 206 |
| 1390 | 30-070 | LG 216 |
| 1391 | 07-204 | LG 778 |
| 1395 | 30-091 | LG 217 |
| 1396 | 30-132 | LG 179 |
| 13973 | 33-124 | LG 736 |
| 1398 | 30-903 | LG 186 |
| 13987 | 396-524 | LG 415 |
| 13988 | 84-031 | LG 675 |
| 13990 | 84-030 | LG 675 |
| 1400 | 07-201 | LG 779 |
| 14009 | 33-138 | LG 738 |
| 1401 | 50-101 | LG 746 |
| 14023 | 60-103 | LG 702 |
| 14029 | 33-246 | LG 732 |
| 14035 | 72-162 | LG 1038 |
| 14041 | 33-245 | LG 786 |
| 14045 | 33-185 | LG 737 |
| 1405 | 50-410 | LG 745 |
| 1406 | 50-409 | LG 745 |
| 14076 | 95-092 | LG 423 |
| 1408 | 49-840 | LG 609 |
| 1408302s | 30-190 | LG 207 |
| 14089 | 30-186 | LG 184 |
| 1409 | 49-201 | LG 608 |
| 14090 | 34-206 | LG 826 |
| 14095 | 92-048 | LG 498 |
| 14096 | 92-124 | LG 497 |
| 14099 | 30-183 | LG 189 |
| 1411 | 49-239 | LG 609 |
| 14110 | 50-659 | LG 600 |
| 14111 | 50-657 | LG 596 |
| 14112 | 50-658 | LG 596 |
| 14116 | 115-220 | LG 264 |
| 14117 | 115-222 | LG 264 |
| 14118 | 115-219 | LG 305 |
| 14127 | 55-995 | |
| 1413 | 49-101 | LG 602 |
| 14130 | 115-145 | LG 323 |
| 14146 | 50-428 | LG 752 |
| 14149 | 91-611 | LG 527 |
| 1416 | 49-693 | LG 602 |
| 14165 | 15-115 | LG 282 |
| 14167 | 15-117 | LG 283 |
| 1419 | 49-033 | LG 628 |
| 14209 | 15-119 | LG 283 |
| 1421 | 49-301 | LG 606 |
| 14216 | 91-605 | LG 544 |
| 14217 | 15-116 | LG 283 |

# 2019 Aftermarket X-Reference

## ROTARY

| PART No. | OREGON | Page |
|---|---|---|
| 14220 | 33-431 | LG 729 |
| 14222 | 33-431 | LG 729 |
| 14233 | 68-373 | LG 962 |
| 1424 | 49-077 | LG 628 |
| 14242 | 34-103 | LG 830 |
| 14243 | 75-799 | LG 293 |
| 1425 | 49-004 | LG 622 |
| 14255 | 34-104 | LG 830 |
| 1426 | 49-003 | LG 622 |
| 1427 | 49-002 | LG 623 |
| 1428 | 49-006 | LG 622 |
| 14282 | 82-057 | LG 905 |
| 14283 | 82-053 | LG 905 |
| 14285 | 41-938 | LG 1014 |
| 14286 | 41-939 | LG 1014 |
| 14289 | 30-182 | LG 185 |
| 1429 | 49-005 | LG 622 |
| 1430 | 49-039 | LG 629 |
| 14306 | 46-332 | LG 720 |
| 14315 | 33-150 | LG 787 |
| 14319 | 115-146 | LG 256 |
| 14323 | 33-083 | LG 947 |
| 14324 | 60-059 | LG 706 |
| 14328 | 82-058 | LG 898 |
| 1434 | 49-025 | LG 629 |
| 14341 | 46-041 | LG 706 |
| 1435 | 02-407 | LG 790 |
| 14363 | 15-126 | LG 284 |
| 14368 | 55-140-0 | LG 989 |
| 14374 | 55-147-1 | |
| 14375 | 55-145-1 | LG 989 |
| 14383 | 49-442 | LG 619 |
| 14390 | 75-296 | LG 295 |
| 1440 | 02-404 | LG 790 |
| 1441 | 49-041-0 | LG 749 |
| 1442 | 49-040-0 | LG 749 |
| 14437 | 48-233 | LG 724 |
| 14440 | 48-235 | LG 886 |
| 1445 | 49-045 | LG 749 |
| 14459 | 195-072 | LG 530 |
| 1447 | 49-047 | LG 749 |
| 14475 | 96-364 | LG 488 |
| 14481 | 92-115 | LG 499 |
| 14482 | 92-122 | LG 499 |
| 14488 | 92-127 | LG 498 |
| 1449 | 49-016 | LG 759 |
| 14500 | 55-971 | LG 988 |
| 14501 | 55-973 | LG 988 |
| 14512 | 115-221 | LG 862 |
| 14513 | 115-223 | LG 250 |
| 1453 | 36-001 | |
| 14556 | 68-374 | LG 962 |
| 14577 | 55-972 | LG 988 |
| 1461 | 36-022 | LG 750 |
| 14657 | 92-102 | LG 458 |
| 1466 | 36-005 | LG 750 |
| 1470 | 50-411 | LG 745 |
| 1471 | 50-408 | LG 745 |
| 1474 | 50-407 | LG 758 |
| 1479 | 50-544 | LG 747 |
| 1480 | 50-542 | LG 747 |
| 1482 | 50-027 | LG 747 |
| 1484 | 50-541 | LG 747 |
| 1491 | 50-032 | LG 759 |
| 1494 | 49-099 | LG 748 |
| 1498 | 49-355 | LG 746 |
| 1501 | 49-153 | LG 758 |
| 1503 | 49-128 | LG 747 |
| 1522 | 49-014 | LG 759 |
| 1529 | 36-101 | LG 750 |
| 1544 | 49-802 | LG 610 |
| 1547 | 55-610 | LG 191 |
| 1550 | 55-211 | LG 191 |
| 1551 | 49-801 | LG 610 |
| 1567 | 55-613 | LG 211 |
| 1568 | 55-612 | LG 211 |
| 158 | 02-644-0 | LG 748 |
| 1708307s | 30-188 | |
| 1708312s | 30-189 | LG 207 |
| 1720 | 42-455 | LG 721 |
| 17327 | 31-604 | LG 937 |
| 1746 | 42-550 | |
| 1747 | 42-551 | |
| 1764 | 33-340 | LG 784 |
| 1778 | 33-365 | LG 784 |
| 1780 | 33-362 | LG 784 |
| 1781 | 33-333 | LG 786 |
| 182 | 49-083 | LG 913 |
| 1884 | 33-363 | LG 787 |
| 1927 | 33-320-0 | LG 731 |
| 1928 | 33-385 | LG 942 |
| 1929 | 33-332 | LG 730 |
| 1930 | 33-390 | |
| 1931 | 33-389 | LG 945 |
| 1932 | 47-081 | LG 744 |
| 1933 | 47-121 | LG 744 |
| 1934 | 47-161 | LG 744 |
| 1935 | 47-201 | LG 744 |
| 1936 | 47-051 | LG 744 |
| 1937 | 47-038 | LG 743 |
| 1938 | 47-014 | LG 743 |
| 1939 | 33-021 | LG 950 |
| 1940 | 47-080 | LG 744 |
| 1941 | 47-120 | LG 744 |
| 1942 | 47-160 | LG 744 |
| 1943 | 47-200 | LG 744 |
| 1944 | 47-050 | LG 744 |
| 1950 | 33-070 | LG 742 |
| 1994 | 86-001 | LG 781 |
| 1997 | 86-005 | LG 782 |
| 1998 | 86-008 | LG 782 |
| 1999 | 86-010 | LG 782 |
| 2000 | 91-805 | LG 560 |
| 2001 | 91-806 | LG 447 |
| 2006 | 99-103 | LG 551 |
| 2007 | 99-107 | LG 551 |
| 201 | 33-301 | LG 743 |
| 2012 | 97-016 | LG 524 |
| 2013 | 97-015 | LG 527 |
| 204 | 33-313 | LG 743 |
| 205 | 33-302 | LG 743 |
| 2078 | 91-714 | LG 543 |
| 2079 | 91-713 | LG 422 |
| 208 | 33-307 | LG 743 |
| 2081 | 92-146 | LG 539 |
| 210 | 33-312 | LG 743 |
| 2148 | 40-316 | LG 586 |
| 2160 | 91-291 | LG 457 |
| 2162 | 95-014 | LG 374 |
| 2171 | 94-021 | LG 573 |
| 2172 | 91-183 | LG 370 |
| 2173 | 91-184 | LG 421 |
| 2174 | 93-008 | LG 510 |
| 2175 | 34-003 | LG 821 |
| 2176 | 34-008 | LG 821 |
| 2182 | 34-036 | LG 821 |
| 2183 | 34-044 | LG 821 |
| 2185 | 78-640 | LG 835 |
| 2186 | 78-641 | LG 835 |
| 2187 | 78-643 | LG 835 |
| 2188 | 78-031 | LG 826 |
| 2190 | 34-027 | LG 821 |
| 2191 | 34-028 | LG 821 |
| 2192 | 34-029 | LG 821 |
| 2209 | 45-103 | LG 938 |
| 2210 | 45-104 | LG 939 |
| 2212 | 45-114 | LG 938 |
| 2213 | 45-301 | LG 804 |
| 2214 | 45-302 | LG 804 |
| 2215 | 45-305 | LG 804 |
| 2216 | 45-306 | LG 804 |
| 2218 | 48-200 | LG 694 |
| 2224 | 43-075 | |
| 2228 | 73-560 | LG 844 |
| 223 | 60-100 | LG 721 |
| 2234 | 31-908 | LG 929 |
| 2235 | 07-308 | LG 772 |
| 2238 | 09-801 | LG 229 |
| 2239 | 31-100 | LG 929 |
| 2243 | 48-205 | LG 694 |
| 228 | 60-522 | LG 715 |
| 2281 | 35-016 | LG 809 |
| 2282 | 35-028 | LG 810 |
| 2283 | 35-015 | LG 810 |
| 2284 | 35-032 | LG 809 |
| 2294 | 35-001 | LG 806 |
| 2294 | 35-007 | LG 806 |
| 2296 | 35-005 | LG 806 |
| 231 | 60-353 | LG 719 |
| 233 | 60-061 | LG 718 |
| 234 | 60-991 | LG 718 |
| 235 | 60-209 | LG 700 |
| 236 | 60-365 | LG 700 |
| 237 | 60-122 | LG 721 |
| 239 | 60-426 | LG 699 |
| 241 | 60-409 | LG 700 |
| 244 | 60-408 | LG 700 |
| 2444 | 43-685 | LG 936 |
| 2445 | 43-699 | LG 936 |
| 245 | 74-054 | LG 721 |
| 246 | 74-072 | LG 721 |
| 248 | 74-732 | LG 721 |
| 249 | 02-108 | LG 723 |
| 250 | 02-115 | LG 723 |
| 252 | 02-103 | LG 722 |
| 253 | 33-240 | LG 948 |
| 257 | 46-200 | LG 722 |
| 262 | 60-048 | LG 722 |
| 263 | 60-065 | LG 722 |
| 264 | 60-060 | LG 722 |
| 2658 | 40-843 | LG 588 |
| 2661 | 40-845 | LG 588 |
| 2663 | 40-140 | LG 584 |
| 2668 | 40-132 | LG 586 |
| 2669 | 40-132 | LG 586 |
| 267 | 02-098 | LG 722 |
| 2670 | 40-131 | LG 586 |
| 2671 | 40-130 | LG 586 |
| 2672 | 40-130 | LG 586 |
| 2673 | 40-503 | LG 589 |
| 2681 | 49-667 | LG 750 |
| 2690 | 95-011 | |
| 27 | 02-416 | |
| 2700 | 46-024 | LG 719 |
| 2701 | 02-111 | LG 723 |
| 271 | 72-450 | LG 1037 |
| 272 | 72-510 | LG 1036 |
| 273 | 72-301 | LG 1037 |
| 2733 | 49-107 | LG 749 |
| 2734 | 49-100 | LG 749 |
| 2735 | 49-112 | LG 749 |
| 2736 | 49-120 | LG 759 |
| 274 | 72-427 | LG 1029 |
| 2745 | 50-302 | LG 758 |
| 276 | 72-430 | LG 1034 |
| 2760 | 50-548 | LG 759 |
| 2761 | 50-025-0 | LG 747 |
| 2762 | 50-033 | LG 759 |
| 2764 | 50-041 | LG 757 |
| 2772 | 36-100 | LG 750 |
| 2773 | 30-097 | LG 179 |
| 2774 | 30-098 | LG 206 |
| 2775 | 30-100 | LG 217 |
| 2777 | 30-101 | LG 179 |
| 2778 | 30-105 | LG 179 |
| 278 | 72-437 | LG 1030 |
| 2780 | 30-125 | LG 206 |
| 2782 | 30-954 | LG 220 |
| 2784 | 30-301 | LG 217 |
| 2786 | 30-920 | LG 186 |
| 2788 | 30-094 | LG 180 |
| 2789 | 30-700 | LG 180 |
| 2790 | 30-430 | LG 211 |
| 2792 | 30-432 | |
| 2797 | 30-929 | LG 187 |
| 280 | 72-106 | LG 1029 |
| 2803 | 30-303 | LG 198 |
| 2805 | 30-933 | LG 195 |
| 2806 | 30-104 | LG 180 |
| 2808 | 30-405 | LG 193 |
| 281 | 72-107 | LG 1029 |
| 282 | 72-108 | LG 1031 |
| 2828 | 30-304 | LG 199 |
| 2829 | 30-111 | LG 217 |
| 2838 | 30-710 | LG 181 |
| 2839 | 30-711 | LG 218 |
| 2840 | 30-106 | LG 179 |
| 2841 | 30-720 | LG 180 |
| 2842 | 30-117 | LG 219 |
| 2843 | 30-421 | LG 220 |
| 2844 | 30-946 | LG 207 |
| 285 | 72-410 | LG 1030 |
| 286 | 72-442 | LG 1037 |
| 2884 | 49-102 | LG 602 |

X

## ROTARY

| PART No. | OREGON | Page |
|---|---|---|
| 2885 | 49-989 | LG 602 |
| 2886 | 49-401 | LG 605 |
| 289 | 72-449 | LG 1030 |
| 2892 | 82-244 | LG 910 |
| 2904 | 85-001 | LG 908 |
| 2915 | 34-022 | LG 822 |
| 2916 | 78-027 | LG 832 |
| 2917 | 34-004 | LG 832 |
| 2917 | 78-021 | LG 832 |
| 2918 | 34-824 | LG 832 |
| 2919 | 34-043 | LG 823 |
| 2922 | 33-386 | LG 942 |
| 2925 | 82-243 | LG 902 |
| 2926 | 44-323 | LG 838 |
| 2932 | 42-008 | LG 945 |
| 2934 | 48-001 | LG 914 |
| 2936 | 45-087 | LG 243 |
| 2937 | 85-005 | |
| 2938 | 42-009 | LG 945 |
| 2950 | 49-035 | LG 629 |
| 2961 | 50-502 | LG 756 |
| 2966 | 72-436 | LG 1034 |
| 2976 | 72-508 | LG 1034 |
| 2977 | 72-500 | LG 1034 |
| 2980 | 72-436 | LG 1034 |
| 2985 | 72-510 | LG 1036 |
| 2989 | 72-436 | LG 1034 |
| 2991 | 72-117 | LG 1036 |
| 2998 | 72-746 | LG 1032 |
| 2999 | 72-747 | LG 1036 |
| 300 | 76-067-0 | LG 726 |
| 301 | 51-001-0 | LG 727 |
| 30127 | 55-545 | LG 992 |
| 30130 | 55-305-1 | LG 992 |
| 3023 | 43-562 | LG 936 |
| 3037 | 43-540 | LG 936 |
| 304 | 71-108 | LG 957 |
| 305 | 71-107 | LG 957 |
| 3068 | 43-694 | LG 936 |
| 3105 | 55-218 | LG 209 |
| 3108 | 55-214 | LG 209 |
| 3109 | 55-212 | LG 209 |
| 3111 | 55-207 | LG 191 |
| 3112 | 55-226 | LG 212 |
| 3116 | 55-240 | LG 214 |
| 3200 | 45-082 | LG 854 |
| 3202 | 45-088 | LG 240 |
| 3209 | 45-091 | LG 249 |
| 3211 | 45-092 | LG 854 |
| 3216 | 45-019 | LG 239 |
| 3217 | 45-220 | LG 232 |
| 3221 | 84-010 | LG 913 |
| 3222 | 45-094 | LG 249 |
| 3223 | 05-060 | LG 914 |
| 3228 | 45-208 | LG 245 |
| 3229 | 45-209 | LG 246 |
| 3236 | 34-004 | LG 832 |
| 3239 | 72-745 | LG 1033 |
| 324 | 45-112 | LG 241 |
| 3244 | 45-110 | LG 245 |
| 325 | 45-012 | LG 224 |
| 326 | 45-058 | LG 232 |
| 3264 | 71-408 | LG 957 |
| 3265 | 71-105 | LG 957 |
| 3266 | 71-275 | LG 956 |
| 3268 | 71-402 | LG 956 |
| 327 | 45-034 | LG 224 |
| 3275 | 58-332 | LG 959 |
| 3276 | 72-796 | LG 1043 |
| 328 | 45-000 | LG 237 |
| 329 | 45-080 | LG 249 |
| 3305 | 45-098 | LG 243 |
| 3306 | 05-060 | LG 914 |
| 3316 | 78-676 | LG 839 |
| 3317 | 44-332 | LG 838 |
| 3319 | 33-331 | LG 730 |
| 3320 | 72-100 | |
| 3320 | 72-304 | LG 1038 |
| 3322 | 91-005 | LG 458 |
| 3329 | 91-609 | LG 469 |
| 3329 | 93-025 | LG 482 |
| 3339 | 91-253 | LG 415 |
| 3346 | 91-342 | LG 447 |
| 3356 | 98-037 | LG 574 |
| 3361 | 94-018 | LG 565 |
| 3362 | 94-011 | LG 572 |
| 3372 | 91-502 | LG 477 |
| 3374 | 91-235 | LG 461 |
| 3377 | 91-557 | LG 545 |
| 3379 | 91-558 | LG 448 |
| 3380 | 91-532 | LG 448 |
| 3386 | 91-430 | LG 497 |
| 339 | 45-079 | LG 249 |
| 3390 | 97-110 | LG 525 |
| 3392 | 95-015 | LG 400 |
| 3393 | 94-039 | LG 561 |
| 3395 | 94-038 | LG 568 |
| 3400 | 93-009 | LG 476 |
| 3401 | 93-010 | LG 432 |
| 3402 | 93-011 | LG 557 |
| 3403 | 91-266 | LG 431 |
| 3404 | 91-622 | LG 536 |
| 3405 | 94-022 | LG 565 |
| 3406 | 96-005 | |
| 3421 | 91-761 | LG 578 |
| 3423 | 91-911 | LG 576 |
| 3424 | 91-128 | LG 424 |
| 3425 | 91-547 | LG 449 |
| 3430 | 97-330 | LG 528 |
| 3434 | 91-626 | LG 552 |
| 3441 | 94-026 | LG 369 |
| 3442 | 91-623 | LG 485 |
| 3445 | 91-912 | LG 576 |
| 3446 | 91-913 | LG 576 |
| 345 | 76-002 | LG 726 |
| 3450 | 02-700 | LG 765 |
| 3452 | 02-701 | LG 765 |
| 3459 | 72-406 | LG 1029 |
| 346 | 70-320 | LG 959 |
| 3460 | 72-407 | LG 1029 |
| 3461 | 72-408 | LG 1029 |
| 3462 | 07-307 | LG 770 |
| 3469 | 91-352 | LG 482 |
| 347 | 58-071 | LG 959 |
| 348 | 58-077 | LG 959 |
| 349 | 58-132 | LG 960 |
| 350 | 58-133 | LG 960 |
| 3505 | 23-180 | LG 983 |
| 3509 | 23-195 | LG 983 |
| 3510 | 21-105 | LG 981 |
| 3512 | 55-185 | LG 1027 |
| 3513 | 21-505 | LG 981 |
| 3515 | 23-131 | LG 983 |
| 3518 | 23-780 | LG 983 |
| 3519 | 23-795 | LG 983 |
| 352 | 71-400 | LG 956 |
| 3520 | 23-705 | LG 983 |
| 3539 | 49-841 | LG 626 |
| 354 | 71-101 | LG 956 |
| 354 | 71-600 | LG 956 |
| 355 | 71-103 | LG 956 |
| 355 | 71-800 | LG 956 |
| 3550 | 49-411 | LG 759 |
| 3551 | 49-402 | LG 758 |
| 3552 | 49-150 | LG 758 |
| 3554 | 49-403 | LG 758 |
| 3555 | 50-548 | LG 759 |
| 357 | 71-405 | LG 956 |
| 358 | 71-816 | LG 956 |
| 359 | 70-312 | LG 959 |
| 360 | 71-101 | LG 956 |
| 362 | 58-075 | LG 959 |
| 364 | 71-002 | LG 957 |
| 3644 | 49-803 | LG 610 |
| 3651 | 50-204 | LG 758 |
| 3653 | 50-206 | LG 758 |
| 3655 | 49-021 | LG 629 |
| 3667 | 49-804 | LG 610 |
| 367 | 45-108 | LG 894 |
| 3672 | 49-111 | LG 748 |
| 3673 | 49-131 | LG 745 |
| 368 | 71-001 | LG 957 |
| 371 | 72-800 | LG 1047 |
| 373 | 72-804 | LG 1047 |
| 379 | 72-804 | LG 1047 |
| 382 | 45-277 | LG 242 |
| 383 | 32-100 | LG 676 |
| 384 | 32-101 | LG 676 |
| 385 | 32-105 | LG 676 |
| 386 | 32-107 | LG 676 |
| 387 | 32-111 | LG 676 |
| 388 | 32-112 | LG 676 |
| 389 | 32-114 | LG 676 |
| 390 | 32-116 | LG 676 |
| 3902 | 07-207 | LG 779 |
| 3903 | 07-206 | LG 776 |
| 3904 | 07-205 | LG 779 |
| 3905 | 07-215 | LG 776 |
| 392 | 32-110 | LG 676 |
| 394 | 32-103 | LG 676 |
| 395 | 32-108 | LG 676 |
| 399 | 02-187 | LG 676 |
| 400 | 02-188 | LG 676 |
| 401 | 02-190 | LG 676 |
| 402 | 02-191 | LG 676 |
| 403 | 02-192 | LG 676 |
| 404 | 02-194 | LG 676 |
| 405 | 02-195 | LG 676 |
| 406 | 02-196 | LG 676 |
| 408 | 02-193 | LG 676 |
| 411 | 02-175 | LG 676 |
| 412 | 02-176 | LG 676 |
| 413 | 02-177 | LG 676 |
| 414 | 02-178 | LG 676 |
| 415 | 02-179 | LG 676 |
| 416 | 02-180 | LG 676 |
| 417 | 02-182 | LG 676 |
| 4179 | 49-812 | LG 612 |
| 418 | 02-184 | LG 676 |
| 4180 | 49-816 | LG 612 |
| 4181 | 49-814 | LG 614 |
| 4182 | 49-806 | LG 611 |
| 4183 | 49-805 | LG 609 |
| 4184 | 49-810 | LG 612 |
| 4186 | 49-807 | LG 611 |
| 4197 | 07-253 | LG 761 |
| 4198 | 07-251 | LG 761 |
| 4199 | 07-252 | LG 761 |
| 420 | 02-181 | LG 676 |
| 4200 | 07-250 | |
| 4209 | 49-809 | LG 613 |
| 4210 | 49-854 | LG 615 |
| 4215 | 57-010 | LG 677 |
| 4218 | 57-017 | LG 677 |
| 4219 | 57-002 | LG 677 |
| 4220 | 57-006 | LG 677 |
| 4223 | 57-001 | LG 677 |
| 430 | 72-318 | LG 1042 |
| 4301 | 49-835 | LG 611 |
| 4302 | 49-846 | LG 608 |
| 436 | 44-347 | LG 840 |
| 4413 | 41-920 | LG 1014 |
| 4414 | 41-921 | LG 1014 |
| 442 | 45-259 | LG 224 |
| 455 | 84-004 | LG 675 |
| 456 | 84-002 | LG 675 |
| 457 | 84-001 | LG 675 |
| 458 | 84-007 | LG 675 |
| 463 | 84-005 | LG 675 |
| 464 | 84-008 | LG 675 |
| 469 | 48-048 | LG 725 |
| 470 | 48-049 | LG 725 |
| 4720 | 33-207 | LG 949 |
| 4793 | 04-008 | LG 686 |
| 483 | 45-243 | LG 243 |
| 4833 | 56-025 | LG 687 |
| 484 | 45-295 | LG 232 |
| 487 | 45-035 | LG 226 |
| 4918 | 55-340 | LG 627 |
| 4923 | 49-844 | LG 612 |
| 4971 | 07-009 | LG 762 |
| 4972 | 07-008 | LG 762 |
| 4995 | 07-200 | LG 778 |
| 4996 | 49-860 | LG 616 |
| 4998 | 75-005 | LG 307 |
| 4999 | 75-010 | LG 311 |
| 5007 | 75-324 | LG 334 |
| 5008 | 75-625 | LG 313 |
| 5010 | 75-327 | LG 334 |
| 5011 | 75-328 | LG 334 |
| 5012 | 75-329 | LG 334 |
| 5013 | 75-330 | LG 334 |
| 5014 | 75-631 | LG 314 |
| 5017 | 75-634 | LG 314 |

# 2019 Aftermarket X-Reference

## ROTARY

| PART No. | OREGON | Page |
|---|---|---|
| 5018 | 75-635 | LG 314 |
| 50188 | 45-253 | LG 224 |
| 50189 | 45-255 | LG 224 |
| 5019 | 75-336 | LG 334 |
| 50190 | 45-227 | LG 234 |
| 50190 | 45-264 | LG 224 |
| 50191 | 45-207 | LG 236 |
| 5020 | 75-337 | LG 334 |
| 5021 | 75-338 | LG 334 |
| 5022 | 75-339 | LG 334 |
| 5023 | 75-340 | LG 334 |
| 50238 | 33-330 | LG 729 |
| 50239 | 33-431 | LG 729 |
| 5024 | 75-341 | LG 334 |
| 5025 | 75-342 | LG 334 |
| 5026 | 75-343 | LG 334 |
| 5027 | 75-344 | LG 334 |
| 5028 | 75-345 | LG 334 |
| 5029 | 75-346 | LG 334 |
| 5031 | 75-348 | LG 334 |
| 5051 | 75-418 | LG 334 |
| 5052 | 75-120 | LG 300 |
| 5053 | 75-420 | LG 334 |
| 5054 | 75-421 | LG 334 |
| 5056 | 75-423 | LG 334 |
| 5057 | 75-724 | LG 310 |
| 5060 | 75-727 | LG 319 |
| 5062 | 75-429 | LG 334 |
| 5063 | 75-101 | LG 269 |
| 5064 | 75-431 | LG 334 |
| 5065 | 75-432 | LG 334 |
| 5066 | 75-433 | LG 334 |
| 5067 | 75-434 | LG 334 |
| 5068 | 75-435 | LG 334 |
| 5069 | 75-436 | LG 334 |
| 5070 | 75-437 | LG 334 |
| 5071 | 75-438 | LG 334 |
| 5072 | 75-439 | LG 334 |
| 5073 | 75-440 | LG 334 |
| 5074 | 75-441 | LG 334 |
| 5075 | 75-442 | LG 334 |
| 5076 | 75-443 | LG 334 |
| 5077 | 75-444 | LG 334 |
| 5078 | 75-090 | LG 301 |
| 5079 | 75-367 | LG 306 |
| 5080 | 75-447 | LG 334 |
| 5081 | 75-448 | LG 334 |
| 5082 | 75-449 | LG 334 |
| 5083 | 75-450 | LG 334 |
| 5084 | 75-451 | LG 334 |
| 5085 | 75-452 | LG 334 |
| 5087 | 75-454 | LG 334 |
| 5088 | 75-455 | LG 334 |
| 5089 | 75-456 | LG 334 |
| 5090 | 75-457 | LG 334 |
| 5091 | 75-458 | LG 334 |
| 5092 | 75-459 | LG 334 |
| 5093 | 75-460 | LG 334 |
| 5094 | 75-461 | LG 334 |
| 5095 | 75-462 | LG 334 |
| 5096 | 75-463 | LG 334 |
| 5097 | 75-464 | LG 334 |
| 5098 | 75-465 | LG 334 |
| 5099 | 75-466 | LG 334 |
| 5100 | 75-467 | LG 334 |
| 5101 | 75-468 | LG 334 |
| 5102 | 75-469 | LG 335 |
| 5103 | 75-470 | LG 335 |
| 5104 | 75-471 | LG 335 |
| 5105 | 75-472 | LG 335 |
| 5106 | 75-473 | LG 335 |
| 5107 | 75-474 | LG 335 |
| 5108 | 75-475 | LG 335 |
| 5109 | 75-476 | LG 335 |
| 5110 | 75-477 | LG 335 |
| 5111 | 75-478 | LG 335 |
| 5112 | 75-479 | LG 335 |
| 5113 | 75-480 | LG 335 |
| 5114 | 75-481 | LG 335 |
| 5115 | 75-482 | LG 335 |
| 5116 | 75-483 | LG 335 |
| 5117 | 75-484 | LG 335 |
| 5118 | 75-485 | LG 335 |
| 5119 | 75-486 | LG 335 |
| 5120 | 75-487 | LG 335 |
| 5121 | 75-488 | LG 335 |
| 5122 | 75-489 | LG 335 |
| 5123 | 75-490 | LG 335 |
| 5124 | 75-491 | LG 335 |
| 5125 | 75-492 | LG 335 |
| 5126 | 75-493 | LG 335 |
| 5127 | 75-494 | LG 335 |
| 5128 | 75-495 | LG 335 |
| 5129 | 75-496 | LG 335 |
| 5130 | 75-497 | LG 335 |
| 5131 | 75-498 | LG 335 |
| 5132 | 75-499 | LG 335 |
| 5133 | 75-400 | LG 335 |
| 5134 | 73-028 | LG 850 |
| 5152 | 75-525 | LG 334 |
| 5154 | 75-527 | LG 334 |
| 5155 | 75-528 | LG 334 |
| 5156 | 75-529 | LG 334 |
| 5157 | 75-530 | LG 334 |
| 5158 | 75-531 | LG 334 |
| 5159 | 75-532 | LG 334 |
| 5160 | 75-533 | LG 334 |
| 5161 | 75-534 | LG 334 |
| 5162 | 75-535 | LG 334 |
| 5163 | 75-536 | LG 334 |
| 5164 | 75-537 | LG 334 |
| 5165 | 75-538 | LG 334 |
| 5166 | 75-539 | LG 334 |
| 5167 | 75-540 | LG 334 |
| 5168 | 75-541 | LG 334 |
| 5169 | 75-542 | LG 334 |
| 5170 | 75-543 | LG 334 |
| 5171 | 75-544 | LG 334 |
| 5172 | 75-545 | LG 334 |
| 5173 | 75-546 | LG 334 |
| 5174 | 75-547 | LG 334 |
| 5175 | 75-548 | LG 334 |
| 5176 | 75-549 | LG 334 |
| 5177 | 75-550 | LG 334 |
| 5178 | 75-551 | LG 334 |
| 5179 | 75-552 | LG 334 |
| 5180 | 75-553 | LG 334 |
| 5181 | 75-554 | LG 334 |
| 5182 | 75-555 | LG 334 |
| 5183 | 75-556 | LG 334 |
| 5184 | 75-557 | LG 334 |
| 5185 | 75-558 | LG 253 |
| 5186 | 75-559 | LG 334 |
| 5187 | 75-560 | LG 334 |
| 5188 | 75-561 | LG 334 |
| 5189 | 75-562 | LG 334 |
| 5190 | 75-563 | LG 253 |
| 5191 | 75-564 | LG 334 |
| 5192 | 75-565 | LG 253 |
| 5193 | 75-566 | LG 334 |
| 5194 | 75-567 | LG 334 |
| 5195 | 75-568 | LG 334 |
| 5196 | 75-145 | LG 300 |
| 5197 | 75-570 | LG 335 |
| 5198 | 75-168 | LG 310 |
| 5199 | 75-572 | LG 335 |
| 5200 | 75-573 | LG 335 |
| 5201 | 75-574 | LG 335 |
| 5202 | 75-575 | LG 335 |
| 5203 | 75-576 | LG 335 |
| 5204 | 75-577 | LG 335 |
| 5205 | 75-578 | LG 335 |
| 5206 | 75-579 | LG 335 |
| 5207 | 75-580 | LG 335 |
| 5208 | 75-581 | LG 335 |
| 5209 | 75-582 | LG 254 |
| 5210 | 75-583 | LG 335 |
| 5211 | 75-584 | LG 335 |
| 5212 | 75-585 | LG 335 |
| 5213 | 75-586 | LG 335 |
| 5214 | 75-587 | LG 335 |
| 5215 | 75-588 | LG 335 |
| 5216 | 75-589 | LG 335 |
| 5217 | 75-590 | LG 335 |
| 5218 | 75-591 | LG 335 |
| 5219 | 75-592 | LG 335 |
| 5220 | 75-593 | LG 335 |
| 5221 | 75-594 | LG 335 |
| 5222 | 75-595 | LG 335 |
| 5223 | 75-596 | LG 335 |
| 5224 | 75-597 | LG 335 |
| 5225 | 75-598 | LG 335 |
| 5226 | 75-599 | LG 335 |
| 5227 | 75-600 | LG 276 |
| 5231 | 75-205 | LG 322 |
| 5232 | 75-036 | LG 297 |
| 5233 | 75-221 | LG 280 |
| 5235 | 75-260 | LG 312 |
| 5236 | 75-054 | LG 312 |
| 5237 | 75-223 | LG 269 |
| 5241 | 75-221 | LG 280 |
| 5242 | 75-240 | LG 297 |
| 5327 | 75-223 | LG 269 |
| 5505 | 73-006 | LG 846 |
| 5508 | 73-001 | LG 847 |
| 5509 | 73-003 | LG 847 |
| 5513 | 73-008 | LG 848 |
| 5514 | 73-013 | LG 849 |
| 5515 | 73-014 | LG 849 |
| 5520 | 73-023 | LG 847 |
| 5521 | 73-016 | LG 846 |
| 5522 | 73-824 | LG 847 |
| 5523 | 73-017 | LG 848 |
| 5524 | 73-018 | LG 849 |
| 55241 | 75-221 | LG 280 |
| 5525 | 73-019 | LG 849 |
| 5527 | 73-036 | LG 849 |
| 5528 | 73-044 | LG 849 |
| 5531 | 73-022 | LG 847 |
| 5532 | 73-023 | LG 847 |
| 5534 | 43-037 | LG 927 |
| 5535 | 67-020 | LG 965 |
| 5536 | 73-048 | LG 846 |
| 5537 | 73-049 | LG 847 |
| 5539 | 73-046 | LG 847 |
| 5540 | 80-017 | LG 852 |
| 5541 | 80-018 | LG 852 |
| 5547 | 84-014 | LG 856 |
| 5548 | 67-004 | LG 965 |
| 5549 | 80-749 | LG 853 |
| 5550 | 67-020 | LG 965 |
| 5551 | 67-013 | LG 965 |
| 5552 | 67-012 | LG 965 |
| 5553 | 67-010 | LG 965 |
| 5554 | 67-001 | LG 965 |
| 5556 | 67-015 | LG 965 |
| 5557 | 67-018 | LG 965 |
| 5558 | 67-017 | LG 965 |
| 5559 | 67-005 | LG 965 |
| 5561 | 67-015 | LG 965 |
| 5565 | 67-008 | LG 965 |
| 5566 | 73-029 | LG 847 |
| 5568 | 73-028 | LG 850 |
| 5569 | 67-001 | LG 965 |
| 5570 | 67-002 | LG 965 |
| 5571 | 67-014 | LG 965 |
| 5572 | 67-019 | LG 965 |
| 5574 | 67-011 | LG 965 |
| 5585 | 73-030 | LG 849 |
| 5589 | 73-052 | LG 850 |
| 5590 | 73-053 | LG 850 |
| 5591 | 73-054 | LG 848 |
| 5592 | 73-057 | LG 848 |
| 5593 | 73-058 | LG 848 |
| 5594 | 73-055 | LG 848 |
| 5595 | 73-056 | LG 848 |
| 5596 | 73-037 | LG 847 |
| 5597 | 73-046 | LG 847 |
| 5600 | 80-036 | LG 727 |
| 5601 | 80-014 | LG 727 |
| 5602 | 80-014 | LG 727 |
| 5704 | 04-125 | LG 694 |
| 5707 | 48-320 | LG 238 |
| 5712 | 34-206 | LG 826 |
| 5713 | 45-127 | LG 244 |
| 5714 | 34-007 | LG 826 |
| 5721 | 45-078 | LG 230 |
| 5722 | 82-350 | LG 889 |
| 5803 | 41-005 | LG 728 |
| 5810 | 31-230 | LG 937 |
| 5811 | 32-106 | LG 676 |
| 5812 | 45-053 | LG 230 |
| 5823 | 75-058 | LG 255 |
| 5829 | 49-827 | LG 608 |

## ROTARY

| PART No. | OREGON | Page |
|---|---|---|
| 5831 | 07-007 | LG 689 |
| 5834 | 55-236 | LG 213 |
| 5840 | 49-282 | LG 619 |
| 5840 | 49-885-0 | LG 619 |
| 5841 | 07-406 | LG 767 |
| 5842 | 07-408 | LG 766 |
| 5861 | 30-935 | LG 201 |
| 5862 | 30-951 | LG 219 |
| 5863 | 30-947 | LG 207 |
| 5864 | 55-231 | LG 212 |
| 5865 | 75-221 | LG 280 |
| 5867 | 75-031 | LG 278 |
| 5870 | 78-113 | LG 829 |
| 5873 | 72-316 | LG 1042 |
| 5875 | 36-022 | LG 750 |
| 5876 | 43-403 | LG 936 |
| 5889 | 57-003 | LG 677 |
| 5891 | 70-349 | LG 959 |
| 5894 | 70-343 | LG 958 |
| 5903 | 02-041 | LG 765 |
| 5904 | 02-040 | LG 765 |
| 5906 | 55-242 | LG 214 |
| 5907 | 55-241 | LG 214 |
| 5909 | 83-283 | LG 818 |
| 5921 | 21-265 | LG 981 |
| 5922 | 21-280 | LG 981 |
| 5923 | 21-295 | LG 981 |
| 5924 | 21-205 | LG 981 |
| 5925 | 21-230 | LG 981 |
| 5927 | 23-395 | LG 983 |
| 5928 | 23-380 | LG 983 |
| 5929 | 23-331 | LG 983 |
| 5933 | 33-334 | LG 730 |
| 5935 | 65-208 | LG 342 |
| 5939 | 30-924 | LG 186 |
| 5940 | 30-112 | LG 218 |
| 5941 | 30-107 | LG 180 |
| 5945 | 70-316 | LG 959 |
| 5947 | 70-326 | LG 959 |
| 5951 | 81-102 | LG 805 |
| 5952 | 81-101 | |
| 5953 | 82-013 | LG 891 |
| 5989 | 78-642 | LG 841 |
| 5991 | 78-649 | LG 841 |
| 5999 | 82-305 | LG 908 |
| 6000 | 07-101 | LG 775 |
| 6002 | 94-770 | LG 569 |
| 6003 | 98-487 | LG 513 |
| 6005 | 98-001 | LG 517 |
| 6006 | 98-044 | LG 409 |
| 6009 | 91-621 | LG 563 |
| 6011 | 191-392 | LG 488 |
| 6012 | 91-393 | LG 485 |
| 6014 | 91-256 | LG 437 |
| 6017 | 97-107 | LG 524 |
| 6018 | 97-105 | LG 523 |
| 6019 | 98-486 | LG 512 |
| 6020 | 91-501 | LG 413 |
| 6026 | 91-627 | LG 482 |
| 6027 | 97-330 | LG 528 |
| 6028 | 98-499 | LG 519 |
| 6034 | 97-109 | LG 525 |
| 6035 | 91-123 | LG 395 |
| 6037 | 95-024 | LG 465 |
| 6038 | 95-023 | LG 380 |
| 6042 | 98-002 | LG 401 |
| 6044 | 90-620 | LG 368 |
| 6045 | 90-621 | LG 368 |
| 6046 | 90-622 | LG 368 |
| 6052 | 90-618 | LG 368 |
| 6053 | 90-619 | LG 368 |
| 6060 | 91-003 | LG 370 |
| 6066 | 91-097 | LG 388 |
| 6068 | 91-096 | LG 389 |
| 6069 | 91-714 | LG 543 |
| 6081 | 91-414 | LG 405 |
| 6082 | 91-415 | LG 406 |
| 6083 | 91-506 | LG 473 |
| 6087 | 91-167 | LG 416 |
| 6088 | 91-508 | LG 419 |
| 6096 | 98-002 | LG 401 |
| 6105 | 95-031 | LG 377 |
| 6107 | 40-141 | LG 585 |
| 6110 | 99-121 | LG 551 |
| 6111 | 97-010 | LG 524 |
| 6112 | 97-006 | LG 525 |
| 6113 | 97-123 | LG 537 |
| 6119 | 97-118 | LG 524 |
| 6120 | 95-034 | LG 377 |
| 6122 | 91-443 | LG 489 |
| 6123 | 95-036 | LG 463 |
| 6124 | 195-033 | LG 400 |
| 6124 | 95-038 | LG 523 |
| 6125 | 195-032 | LG 425 |
| 6126 | 98-537 | LG 516 |
| 6129 | 97-119 | LG 525 |
| 6139 | 98-007 | LG 401 |
| 6143 | 98-496 | LG 515 |
| 6144 | 97-005 | LG 527 |
| 6145 | 97-004 | |
| 6146 | 97-003 | |
| 6162 | 97-008 | LG 526 |
| 6166 | 97-014 | LG 527 |
| 6167 | 91-127 | LG 396 |
| 6167 | 91-547 | LG 449 |
| 6168 | 91-127 | LG 396 |
| 6169 | 91-919 | LG 576 |
| 6170 | 91-920 | LG 576 |
| 6171 | 91-254 | LG 456 |
| 6172 | 40-121 | LG 584 |
| 6173 | 91-417 | LG 500 |
| 6174 | 97-001 | LG 527 |
| 6175 | 91-368 | LG 460 |
| 6178 | 91-218 | LG 420 |
| 6180 | 91-253 | LG 415 |
| 6184 | 94-032 | LG 568 |
| 6185 | 91-126 | LG 548 |
| 6186 | 91-403 | LG 488 |
| 6189 | 195-005 | LG 373 |
| 6190 | 195-003 | LG 400 |
| 6192 | 91-380 | LG 538 |
| 6196 | 95-018 | LG 399 |
| 6205 | 95-006 | LG 397 |
| 6206 | 91-381 | LG 483 |
| 6208 | 91-433 | LG 498 |
| 6209 | 91-438 | LG 500 |
| 6210 | 91-764 | LG 579 |
| 6212 | 98-005 | LG 521 |
| 6218 | 95-047 | LG 378 |
| 6221 | 91-384 | LG 487 |
| 6223 | 91-383 | LG 484 |
| 6224 | 91-508 | LG 419 |
| 6235 | 95-051 | LG 465 |
| 6236 | 195-021 | LG 468 |
| 6237 | 91-332 | LG 412 |
| 6238 | 91-329 | LG 409 |
| 6239 | 91-440 | LG 408 |
| 6240 | 91-056 | LG 406 |
| 6248 | 690-617-0 | LG 368 |
| 6250 | 91-188 | LG 439 |
| 6251 | 94-019 | LG 570 |
| 6252 | 91-395 | LG 493 |
| 6253 | 91-394 | LG 489 |
| 6254 | 191-015 | LG 372 |
| 6255 | 91-395 | LG 493 |
| 6256 | 91-127 | LG 396 |
| 6261 | 40-142 | LG 584 |
| 6262 | 195-048 | LG 430 |
| 6263 | 95-049 | LG 459 |
| 6264 | 95-050 | LG 461 |
| 6265 | 91-436 | LG 498 |
| 6269 | 91-217 | LG 558 |
| 6270 | 94-029 | LG 414 |
| 6271 | 94-040 | LG 573 |
| 6272 | 93-013 | LG 480 |
| 6276 | 40-840 | LG 588 |
| 6279 | 40-703 | LG 590 |
| 6285 | 91-239 | LG 454 |
| 6290 | 91-311 | LG 439 |
| 6291 | 91-335 | LG 420 |
| 6294 | 96-344 | LG 536 |
| 6296 | 96-310 | LG 444 |
| 6296 | 96-321 | LG 436 |
| 6297 | 96-630 | LG 556 |
| 6298 | 96-323 | LG 477 |
| 6299 | 96-347 | LG 387 |
| 6300 | 96-308 | LG 456 |
| 6301 | 96-633 | LG 556 |
| 6302 | 96-628 | LG 528 |
| 6303 | 96-319 | LG 415 |
| 6308 | 96-600 | LG 569 |
| 6309 | 96-329 | LG 449 |
| 6310 | 96-309 | LG 488 |
| 6311 | 96-346 | LG 449 |
| 6312 | 96-303 | LG 416 |
| 6315 | 96-306 | LG 538 |
| 6316 | 396-714 | LG 413 |
| 6317 | 96-620 | LG 551 |
| 6323 | 91-535 | LG 448 |
| 6326 | 94-061 | LG 561 |
| 6328 | 91-399 | LG 493 |
| 6401 | 91-547 | LG 449 |
| 6402 | 91-544 | LG 397 |
| 6403 | 91-533 | LG 394 |
| 6404 | 91-507 | LG 415 |
| 6405 | 91-259 | LG 432 |
| 6408 | 97-017 | LG 537 |
| 6410 | 94-618 | LG 506 |
| 6415 | 96-343 | LG 395 |
| 6421 | 96-309 | LG 488 |
| 6422 | 96-900 | LG 526 |
| 6423 | 198-049 | LG 518 |
| 6424 | 98-051 | LG 521 |
| 6425 | 98-050 | LG 521 |
| 6426 | 99-617 | LG 395 |
| 6430 | 91-517 | LG 457 |
| 6431 | 91-516 | LG 457 |
| 6432 | 91-761 | LG 578 |
| 6434 | 91-766 | LG 579 |
| 6437 | 95-045 | LG 374 |
| 6438 | 98-066 | LG 409 |
| 6439 | 98-068 | LG 389 |
| 6441 | 91-509 | LG 424 |
| 6448 | 98-065 | LG 515 |
| 6450 | 98-098 | LG 410 |
| 6460 | 97-601 | LG 527 |
| 6467 | 91-762 | LG 578 |
| 6470 | 97-018 | LG 523 |
| 6471 | 97-001 | LG 527 |
| 6475 | 97-024 | LG 525 |
| 6477 | 40-139 | LG 584 |
| 6479 | 91-078 | LG 490 |
| 6480 | 91-138 | LG 488 |
| 6481 | 91-374 | LG 442 |
| 6491 | 97-606 | LG 522 |
| 6495 | 95-052 | LG 398 |
| 6496 | 96-394 | LG 538 |
| 6500 | 99-127 | LG 375 |
| 6501 | 75-111 | LG 306 |
| 6502 | 75-026 | LG 307 |
| 6503 | 75-038 | LG 307 |
| 6505 | 75-045 | LG 307 |
| 6507 | 75-057 | LG 307 |
| 6508 | 75-061 | LG 307 |
| 6509 | 75-063 | LG 307 |
| 6515 | 30-141 | LG 217 |
| 6517 | 30-937 | LG 202 |
| 6518 | 30-305 | LG 198 |
| 6519 | 30-936 | LG 202 |
| 6521 | 49-160 | LG 747 |
| 6524 | 30-917 | LG 186 |
| 6534 | 45-031 | LG 232 |
| 6535 | 45-256 | LG 224 |
| 6541 | 58-088 | LG 959 |
| 6545 | 33-387 | LG 945 |
| 6553 | 30-116 | LG 219 |
| 6567 | 30-303 | LG 198 |
| 6568 | 49-839 | LG 613 |
| 6571 | 71-110 | LG 956 |
| 6572 | 78-026 | LG 822 |
| 6572 | 78-300 | LG 833 |
| 6573 | 45-010 | LG 238 |
| 6581 | 48-135 | LG 694 |
| 6593 | 07-304 | LG 770 |
| 6594 | 58-300 | LG 963 |
| 6600 | 83-282 | LG 817 |
| 6601 | 30-736 | LG 185 |
| 6603 | 30-184 | LG 186 |
| 6604 | 30-134 | LG 180 |
| 6605 | 30-085 | LG 203 |
| 6606 | 30-942 | LG 206 |
| 6608 | 78-678 | LG 835 |
| 6616 | 07-155 | LG 761 |
| 6617 | 07-153 | LG 761 |

# 2019 Aftermarket X-Reference

## ROTARY

| PART No. | OREGON | Page |
|---|---|---|
| 6618 | 07-151 | LG 761 |
| 6619 | 07-152 | LG 761 |
| 6620 | 07-150 | LG 761 |
| 6626 | 65-221 | LG 341 |
| 6627 | 71-418 | LG 957 |
| 6657 | 60-860 | LG 701 |
| 6658 | 60-160 | LG 701 |
| 6659 | 30-758 | LG 209 |
| 6676 | 83-028 | LG 817 |
| 6677 | 83-283 | LG 818 |
| 6680 | 83-300 | LG 819 |
| 6681 | 83-301 | LG 816 |
| 6684 | 30-187 | LG 192 |
| 6684 | 30-401 | LG 193 |
| 6688 | 30-403 | LG 192 |
| 669 | 75-508 | LG 319 |
| 6690 | 30-404 | LG 192 |
| 6691 | 30-506 | LG 195 |
| 6692 | 30-406 | LG 193 |
| 6693 | 30-934 | LG 195 |
| 6694 | 30-410 | LG 220 |
| 6694 | 55-983 | LG 992 |
| 6697 | 30-924 | LG 186 |
| 6698 | 30-412 | LG 220 |
| 670 | 75-353 | LG 319 |
| 6700 | 30-413 | LG 221 |
| 6702 | 30-414 | LG 221 |
| 6704 | 30-418 | LG 221 |
| 6705 | 30-309 | LG 199 |
| 6706 | 30-311 | LG 199 |
| 6710 | 33-208 | LG 866 |
| 673 | 175-068 | LG 318 |
| 673 | 75-068 | LG 318 |
| 6737 | 91-400 | LG 488 |
| 675 | 175-073 | LG 319 |
| 675 | 75-073 | LG 319 |
| 6757 | 36-102 | LG 750 |
| 6758 | 36-104 | LG 750 |
| 6762 | 40-951 | LG 587 |
| 6766 | 91-146 | LG 419 |
| 6780 | 31-904 | LG 930 |
| 6781 | 33-186 | LG 789 |
| 6783 | 45-118 | LG 760 |
| 6785 | 90-669 | LG 420 |
| 6788 | 40-010 | LG 588 |
| 6790 | 91-505 | LG 477 |
| 6793 | 65-230 | LG 342 |
| 6813 | 82-678 | LG 904 |
| 6815 | 42-080 | LG 742 |
| 6816 | 42-081 | LG 742 |
| 6820 | 91-373 | LG 383 |
| 6821 | 91-369 | LG 434 |
| 6832 | 70-363 | LG 963 |
| 6833 | 91-515 | LG 415 |
| 6837 | 75-165 | LG 322 |
| 6838 | 75-016 | LG 301 |
| 6839 | 175-002 | LG 301 |
| 6839 | 75-002 | LG 301 |
| 684 | 84-006 | LG 675 |
| 6840 | 75-281 | LG 301 |
| 6841 | 75-018 | LG 301 |
| 6842 | 175-029 | LG 303 |
| 6842 | 75-029 | LG 253 |
| 6843 | 175-021 | LG 274 |
| 6843 | 75-021 | LG 274 |
| 6844 | 75-035 | LG 302 |
| 6845 | 175-028 | LG 302 |
| 6845 | 75-028 | LG 302 |
| 6863 | 45-107 | LG 245 |
| 6871 | 31-912 | LG 929 |
| 6876 | 75-112 | LG 306 |
| 6880 | 51-000 | LG 727 |
| 6885 | 09-808 | LG 697 |
| 6886 | 09-803 | LG 697 |
| 6890 | 85-008 | LG 909 |
| 6893 | 49-826 | LG 606 |
| 6901 | 75-107 | LG 254 |
| 6902 | 175-171 | LG 261 |
| 6902 | 75-171 | LG 289 |
| 6903 | 75-022 | LG 307 |
| 6904 | 175-041 | LG 307 |
| 6904 | 75-041 | LG 255 |
| 6906 | 175-012 | LG 301 |
| 6906 | 75-012 | LG 301 |
| 6907 | 75-009 | LG 301 |
| 6908 | 175-119 | LG 302 |
| 6908 | 75-119 | LG 302 |
| 6915 | 72-306 | LG 1038 |
| 6916 | 72-094 | LG 1042 |
| 6918 | 72-307 | LG 1038 |
| 6925 | 98-600 | LG 85 |
| 6929 | 83-013 | LG 817 |
| 6930 | 51-222 | LG 727 |
| 6949 | 75-023 | LG 302 |
| 6950 | 75-091 | LG 302 |
| 6952 | 75-142 | LG 310 |
| 6953 | 71-107 | LG 957 |
| 6954 | 71-106 | LG 957 |
| 6969 | 75-212 | LG 268 |
| 6970 | 75-179 | LG 310 |
| 6985 | 55-227 | LG 191 |
| 6986 | 55-231 | LG 212 |
| 6989 | 30-938 | LG 202 |
| 6991 | 30-959 | LG 219 |
| 7003 | 55-550 | LG 992 |
| 7004 | 55-551 | LG 992 |
| 7010 | 95-058 | LG 458 |
| 7015 | 33-376 | LG 942 |
| 7018 | 76-070-0 | LG 726 |
| 7023 | 58-397 | LG 958 |
| 7023 | 70-397 | LG 958 |
| 7025 | 70-317 | LG 959 |
| 7026 | 70-321 | LG 960 |
| 7027 | 70-329 | LG 960 |
| 7028 | 70-328 | LG 959 |
| 7029 | 70-335 | LG 959 |
| 7030 | 70-338 | LG 959 |
| 7031 | 70-349 | LG 959 |
| 7033 | 70-351 | LG 959 |
| 7035 | 30-023 | LG 205 |
| 7036 | 30-713 | LG 221 |
| 7038 | 30-419 | LG 221 |
| 7040 | 30-418 | LG 221 |
| 7042 | 30-317 | LG 194 |
| 7044 | 30-318 | LG 193 |
| 7046 | 30-316 | LG 208 |
| 7050 | 30-953 | LG 211 |
| 7050 | 30-974 | LG 188 |
| 7051 | 30-960 | LG 187 |
| 7052 | 30-939 | LG 202 |
| 7081 | 56-019 | LG 772 |
| 7083 | 56-018 | LG 690 |
| 7094 | 30-049 | LG 181 |
| 7095 | 30-925 | LG 187 |
| 7119 | 65-228 | LG 341 |
| 7124 | 78-673 | LG 839 |
| 7125 | 48-202 | LG 694 |
| 7126 | 34-820 | LG 833 |
| 7126 | 34-822 | LG 832 |
| 7127 | 34-824 | LG 832 |
| 7128 | 75-136 | LG 309 |
| 714 | 34-011 | LG 821 |
| 7141 | 55-460-1 | LG 1026 |
| 7144 | 71-417 | LG 957 |
| 7145 | 71-415 | LG 956 |
| 7146 | 71-406 | LG 956 |
| 7147 | 71-003 | LG 956 |
| 715 | 34-001 | LG 821 |
| 7154 | 85-011 | LG 909 |
| 7155 | 82-500 | LG 893 |
| 7156 | 82-501 | LG 894 |
| 7157 | 78-043 | LG 824 |
| 7158 | 76-110 | LG 726 |
| 7159 | 55-110 | LG 765 |
| 7162 | 45-018 | LG 247 |
| 7164 | 30-968 | LG 222 |
| 7168 | 49-170 | LG 758 |
| 7176 | 78-023 | LG 822 |
| 7178 | 45-220 | LG 232 |
| 7179 | 33-391 | LG 945 |
| 718 | 34-002 | LG 821 |
| 7180 | 44-370 | LG 834 |
| 7182 | 34-820 | LG 833 |
| 7183 | 75-143 | LG 310 |
| 7184 | 75-936 | LG 290 |
| 719 | 34-005 | LG 821 |
| 720 | 34-006 | LG 821 |
| 7201 | 70-340 | LG 959 |
| 7202 | 70-339 | LG 959 |
| 7209 | 30-953 | LG 211 |
| 721 | 34-009 | LG 821 |
| 7210 | 45-257 | LG 245 |
| 7213 | 36-001 | |
| 7214 | 30-048 | LG 182 |
| 7215 | 49-843 | LG 612 |
| 7216 | 49-281 | LG 613 |
| 7216 | 49-843 | LG 612 |
| 722 | 34-012 | LG 821 |
| 723 | 34-015 | LG 821 |
| 7233 | 55-120 | LG 770 |
| 7234 | 49-185 | LG 752 |
| 7239 | 35-033 | LG 809 |
| 724 | 34-017 | LG 821 |
| 7241 | 45-037 | LG 242 |
| 7245 | 75-065 | LG 307 |
| 7246 | 49-115 | LG 746 |
| 7248 | 49-110 | LG 746 |
| 725 | 34-018 | LG 821 |
| 7250 | 75-902 | LG 331 |
| 7251 | 82-020 | LG 903 |
| 7255 | 49-018 | LG 728 |
| 7258 | 45-043 | LG 243 |
| 7259 | 07-004 | LG 769 |
| 726 | 34-019 | LG 821 |
| 7260 | 71-407 | LG 956 |
| 7261 | 71-004 | LG 956 |
| 7261 | 71-409 | LG 956 |
| 7262 | 45-188 | LG 230 |
| 727 | 34-020 | LG 821 |
| 7279 | 45-128 | LG 228 |
| 728 | 34-034 | LG 821 |
| 7280 | 33-394 | LG 944 |
| 7282 | 85-012 | LG 909 |
| 7286 | 33-344 | LG 784 |
| 7287 | 33-342 | LG 784 |
| 7288 | 33-340 | LG 784 |
| 729 | 34-031 | LG 821 |
| 7290 | 31-004 | LG 929 |
| 7293 | 07-010 | LG 764 |
| 7298 | 07-109 | LG 778 |
| 730 | 34-033 | LG 821 |
| 7301 | 31-914 | LG 930 |
| 731 | 34-034 | LG 821 |
| 732 | 34-035 | LG 821 |
| 7327 | 31-909 | LG 928 |
| 7328 | 58-302 | LG 959 |
| 733 | 34-037 | LG 821 |
| 734 | 78-029 | LG 831 |
| 736 | 34-810 | LG 725 |
| 7408 | 55-017 | LG 772 |
| 7417 | 44-341 | LG 839 |
| 7429 | 75-324 | LG 334 |
| 7430 | 75-325 | LG 334 |
| 7431 | 75-326 | LG 334 |
| 7432 | 75-327 | LG 334 |
| 7433 | 75-328 | LG 334 |
| 7434 | 75-329 | LG 334 |
| 7435 | 75-330 | LG 334 |
| 7436 | 75-331 | LG 334 |
| 7437 | 75-332 | LG 334 |
| 7438 | 75-333 | LG 334 |
| 7439 | 75-334 | LG 334 |
| 7440 | 75-335 | LG 334 |
| 7441 | 75-336 | LG 334 |
| 7442 | 75-337 | LG 334 |
| 7443 | 75-338 | LG 334 |
| 7444 | 75-339 | LG 334 |
| 7445 | 75-340 | LG 334 |
| 7446 | 75-341 | LG 334 |
| 7447 | 75-342 | LG 334 |
| 7448 | 75-343 | LG 334 |
| 7449 | 75-344 | LG 334 |
| 7450 | 75-345 | LG 334 |
| 7451 | 75-346 | LG 334 |
| 7453 | 75-348 | LG 334 |
| 7454 | 75-349 | LG 334 |
| 7455 | 75-350 | LG 334 |
| 7466 | 75-423 | LG 334 |
| 7467 | 75-424 | LG 334 |
| 7468 | 75-425 | LG 334 |
| 7469 | 75-426 | LG 334 |
| 7470 | 75-427 | LG 334 |
| 7471 | 75-428 | LG 334 |
| 7472 | 75-429 | LG 334 |

X

## ROTARY

| PART No. | OREGON | Page |
|---|---|---|
| 7474 | 75-431 | LG 334 |
| 7475 | 75-432 | LG 334 |
| 7476 | 75-433 | LG 334 |
| 7477 | 175-913 | LG 262 |
| 7477 | 75-434 | LG 334 |
| 7478 | 75-435 | LG 334 |
| 7479 | 75-436 | LG 334 |
| 7480 | 75-437 | LG 334 |
| 7481 | 75-438 | LG 334 |
| 7482 | 75-439 | LG 334 |
| 7483 | 75-440 | LG 334 |
| 7484 | 75-441 | LG 334 |
| 7485 | 75-442 | LG 334 |
| 7486 | 75-443 | LG 334 |
| 7487 | 75-444 | LG 334 |
| 7488 | 75-445 | LG 334 |
| 7489 | 75-446 | LG 334 |
| 7490 | 75-447 | LG 334 |
| 7491 | 75-448 | LG 334 |
| 7492 | 75-449 | LG 334 |
| 7493 | 75-450 | LG 334 |
| 7494 | 75-451 | LG 334 |
| 7495 | 75-452 | LG 334 |
| 7496 | 75-453 | LG 334 |
| 7497 | 75-454 | LG 334 |
| 7498 | 75-455 | LG 334 |
| 7499 | 75-456 | LG 334 |
| 750 | 44-301 | LG 840 |
| 7500 | 75-457 | LG 334 |
| 7501 | 75-458 | LG 334 |
| 7502 | 75-459 | LG 334 |
| 7503 | 75-460 | LG 334 |
| 7504 | 75-461 | LG 334 |
| 7505 | 75-462 | LG 334 |
| 7506 | 75-463 | LG 334 |
| 7507 | 75-464 | LG 334 |
| 7508 | 75-465 | LG 334 |
| 7509 | 75-466 | LG 334 |
| 7510 | 75-467 | LG 334 |
| 7511 | 75-468 | LG 334 |
| 7512 | 75-469 | LG 335 |
| 7513 | 75-470 | LG 335 |
| 7514 | 75-471 | LG 335 |
| 7515 | 75-472 | LG 335 |
| 7516 | 75-473 | LG 335 |
| 7517 | 75-474 | LG 335 |
| 7518 | 75-475 | LG 335 |
| 7519 | 75-476 | LG 335 |
| 752 | 44-306 | LG 840 |
| 7520 | 75-477 | LG 335 |
| 7521 | 75-478 | LG 335 |
| 7522 | 75-479 | LG 335 |
| 7523 | 75-480 | LG 335 |
| 7524 | 75-481 | LG 335 |
| 7525 | 75-482 | LG 335 |
| 7526 | 75-483 | LG 335 |
| 7527 | 75-484 | LG 335 |
| 7528 | 75-485 | LG 335 |
| 7529 | 75-486 | LG 335 |
| 7530 | 75-487 | LG 335 |
| 7531 | 175-099 | LG 262 |
| 7531 | 75-488 | LG 335 |
| 7532 | 75-489 | LG 335 |
| 7533 | 75-490 | LG 335 |
| 7534 | 75-491 | LG 335 |
| 7535 | 75-492 | LG 335 |
| 7536 | 75-493 | LG 335 |
| 7537 | 75-494 | LG 335 |
| 7538 | 75-495 | LG 335 |
| 7539 | 75-496 | LG 335 |
| 7540 | 75-497 | LG 335 |
| 7541 | 75-498 | LG 335 |
| 7542 | 75-499 | LG 335 |
| 7543 | 75-400 | LG 335 |
| 7544 | 75-401 | LG 335 |
| 7545 | 75-402 | LG 335 |
| 7546 | 75-403 | LG 256 |
| 7547 | 75-404 | LG 335 |
| 7548 | 75-405 | LG 335 |
| 7549 | 75-406 | LG 335 |
| 7550 | 75-407 | LG 335 |
| 7551 | 75-408 | LG 335 |
| 7552 | 75-409 | LG 335 |
| 7553 | 75-410 | LG 335 |
| 7554 | 75-411 | LG 335 |
| 7555 | 75-412 | LG 335 |
| 7556 | 75-413 | LG 335 |
| 7557 | 75-414 | LG 335 |
| 756 | 44-310 | LG 840 |
| 7570 | 75-525 | LG 334 |
| 7572 | 75-527 | LG 334 |
| 7573 | 75-528 | LG 334 |
| 7574 | 75-529 | LG 334 |
| 7575 | 75-530 | LG 334 |
| 7576 | 75-531 | LG 334 |
| 7577 | 75-532 | LG 334 |
| 7578 | 75-533 | LG 334 |
| 7579 | 75-534 | LG 334 |
| 758 | 44-312 | LG 840 |
| 7580 | 75-535 | LG 334 |
| 7581 | 75-536 | LG 334 |
| 7582 | 75-537 | LG 334 |
| 7583 | 75-538 | LG 334 |
| 7584 | 75-539 | LG 334 |
| 7585 | 75-540 | LG 334 |
| 7586 | 75-541 | LG 334 |
| 7587 | 75-542 | LG 334 |
| 7588 | 75-543 | LG 334 |
| 7589 | 75-544 | LG 334 |
| 759 | 44-313 | LG 840 |
| 7590 | 75-545 | LG 334 |
| 7591 | 75-546 | LG 334 |
| 7592 | 75-547 | LG 334 |
| 7593 | 75-548 | LG 334 |
| 7594 | 75-549 | LG 334 |
| 7595 | 75-550 | LG 334 |
| 7596 | 75-551 | LG 334 |
| 7597 | 75-552 | LG 334 |
| 7598 | 75-553 | LG 334 |
| 7599 | 75-554 | LG 334 |
| 7600 | 75-555 | LG 334 |
| 7601 | 75-556 | LG 334 |
| 7602 | 75-557 | LG 334 |
| 7603 | 75-558 | LG 253 |
| 7604 | 75-559 | LG 334 |
| 7605 | 75-560 | LG 334 |
| 7606 | 75-561 | LG 334 |
| 7607 | 75-562 | LG 334 |
| 7608 | 75-563 | LG 253 |
| 7609 | 75-564 | LG 334 |
| 7610 | 75-565 | LG 253 |
| 7611 | 75-566 | LG 334 |
| 7612 | 75-567 | LG 334 |
| 7613 | 75-568 | LG 334 |
| 7614 | 75-569 | LG 335 |
| 7615 | 75-570 | LG 335 |
| 7616 | 75-571 | LG 335 |
| 7617 | 75-572 | LG 335 |
| 7618 | 75-573 | LG 335 |
| 7619 | 75-574 | LG 335 |
| 762 | 44-316 | LG 840 |
| 7620 | 75-575 | LG 335 |
| 7621 | 75-576 | LG 335 |
| 7622 | 75-577 | LG 335 |
| 7623 | 75-578 | LG 335 |
| 7624 | 75-579 | LG 335 |
| 7625 | 75-580 | LG 335 |
| 7626 | 75-581 | LG 335 |
| 7627 | 75-582 | LG 254 |
| 7628 | 75-583 | LG 335 |
| 7629 | 75-584 | LG 335 |
| 7630 | 75-585 | LG 335 |
| 7631 | 75-586 | LG 335 |
| 7632 | 75-587 | LG 335 |
| 7633 | 75-588 | LG 335 |
| 7634 | 75-589 | LG 335 |
| 7635 | 75-590 | LG 335 |
| 7636 | 75-591 | LG 335 |
| 7637 | 75-592 | LG 335 |
| 7638 | 75-593 | LG 335 |
| 7639 | 75-594 | LG 335 |
| 764 | 44-318 | LG 840 |
| 7640 | 75-595 | LG 335 |
| 7641 | 75-596 | LG 335 |
| 7642 | 75-597 | LG 335 |
| 7643 | 75-598 | LG 335 |
| 7644 | 75-599 | LG 335 |
| 7645 | 75-500 | LG 335 |
| 7648 | 75-503 | LG 256 |
| 765 | 44-319 | LG 840 |
| 767 | 44-321 | LG 840 |
| 7672 | 75-001 | LG 308 |
| 7673 | 75-152 | LG 308 |
| 7675 | 33-384 | LG 947 |
| 768 | 44-322 | LG 840 |
| 7680 | 84-012 | LG 675 |
| 7681 | 84-013 | LG 675 |
| 769 | 44-348 | LG 840 |
| 7694 | 70-301 | LG 959 |
| 7695 | 70-338 | LG 959 |
| 7696 | 70-355 | LG 959 |
| 7712 | 30-417 | LG 193 |
| 7713 | 30-400 | LG 193 |
| 7714 | 30-313 | LG 201 |
| 7716 | 45-023 | LG 249 |
| 772 | 44-351 | LG 840 |
| 7720 | 45-095 | LG 855 |
| 7721 | 49-007 | LG 622 |
| 7723 | 31-907 | LG 929 |
| 7726 | 30-933 | LG 195 |
| 7730 | 07-392 | LG 767 |
| 7732 | 30-024 | LG 218 |
| 774 | 44-353 | LG 840 |
| 7746 | 30-952 | LG 219 |
| 7765 | 82-250 | LG 902 |
| 7766 | 73-020 | LG 850 |
| 7769 | 04-009 | LG 686 |
| 777 | 78-046 | LG 826 |
| 7771 | 56-011 | LG 687 |
| 7773 | 56-008 | LG 687 |
| 7777 | 55-111 | LG 1026 |
| 7781 | 49-127 | LG 746 |
| 7785 | 30-944 | LG 207 |
| 7787 | 48-145 | LG 698 |
| 7789 | 75-154 | LG 312 |
| 7790 | 75-055 | LG 255 |
| 7791 | 75-043 | LG 312 |
| 7801 | 49-157 | LG 759 |
| 7804 | 33-399 | LG 944 |
| 7810 | 65-220 | LG 340 |
| 7811 | 71-102 | LG 956 |
| 7812 | 60-786 | LG 719 |
| 7813 | 34-020 | LG 821 |
| 7813 | 78-020 | LG 825 |
| 7821 | 71-410 | LG 956 |
| 7822 | 71-412 | LG 956 |
| 7825 | 71-411 | LG 956 |
| 7828 | 71-100 | LG 956 |
| 7836 | 45-100 | LG 239 |
| 7838 | 175-073 | LG 319 |
| 7838 | 75-073 | LG 319 |
| 7841 | 30-456 | LG 201 |
| 7847 | 78-103 | LG 823 |
| 7850 | 78-102 | LG 823 |
| 7851 | 78-101 | LG 249 |
| 7852 | 78-100 | LG 249 |
| 7854 | 41-922 | LG 1014 |
| 7855 | 41-923 | LG 1014 |
| 7856 | 41-935 | LG 1014 |
| 7857 | 41-937 | LG 1014 |
| 7858 | 41-927 | LG 1014 |
| 7859 | 41-929 | LG 1014 |
| 7862 | 41-924 | LG 1014 |
| 7863 | 41-925 | LG 1014 |
| 7864 | 55-092 | LG 768 |
| 7867 | 35-027 | LG 807 |
| 7877 | 30-735 | LG 181 |
| 7879 | 30-108 | LG 180 |
| 7880 | 30-028 | LG 182 |
| 7882 | 55-109 | LG 773 |
| 7883 | 55-102 | LG 773 |
| 7885 | 80-745 | LG 728 |
| 7897 | 55-995 | |
| 7913 | 75-720 | LG 270 |
| 7915 | 75-221 | LG 280 |
| 7916 | 83-284 | LG 818 |
| 7918 | 34-107 | LG 823 |
| 7922 | 33-410 | LG 947 |
| 7928 | 55-121 | LG 1024 |
| 7929 | 55-253 | LG 1024 |
| 7932 | 55-097 | LG 772 |
| 7933 | 55-139 | LG 763 |
| 7934 | 33-337 | LG 730 |
| 7935 | 33-335 | LG 730 |

# 2019 Aftermarket X-Reference

## ROTARY

| PART No. | OREGON | Page |
|---|---|---|
| 7937 | 78-021 | LG 832 |
| 7941 | 49-109 | LG 748 |
| 7943 | 49-123 | LG 746 |
| 7949 | 30-926 | LG 187 |
| 7950 | 45-000 | LG 237 |
| 7952 | 75-060 | LG 322 |
| 7961 | 60-400 | LG 700 |
| 7963 | 49-067 | LG 748 |
| 7966 | 49-095 | LG 746 |
| 7968 | 49-989 | LG 602 |
| 7974 | 60-426 | LG 699 |
| 7975 | 60-426 | LG 699 |
| 7976 | 33-023 | LG 949 |
| 7978 | 34-826 | LG 833 |
| 7978 | 78-027 | LG 832 |
| 7979 | 30-932 | LG 196 |
| 7980 | 30-165 | LG 204 |
| 7980 | 30-709 | LG 194 |
| 7983 | 34-100 | LG 830 |
| 7986 | 44-340 | LG 838 |
| 7991 | 44-341 | LG 839 |
| 7993 | 44-342 | LG 839 |
| 7995 | 44-343 | LG 841 |
| 7997 | 30-416 | LG 214 |
| 7998 | 07-107 | LG 774 |
| 7998 | 07-112 | LG 774 |
| 7999 | 55-122 | LG 770 |
| 8001 | 35-006 | LG 808 |
| 8003 | 35-022 | LG 807 |
| 8005 | 34-009 | LG 821 |
| 8006 | 70-361 | LG 958 |
| 8007 | 70-356 | LG 958 |
| 8051 | 33-345 | LG 784 |
| 8071 | 43-509 | LG 936 |
| 8077 | 48-211 | LG 233 |
| 8083 | 70-147 | LG 960 |
| 8084 | 70-379 | LG 963 |
| 8087 | 33-031 | LG 742 |
| 8088 | 33-033 | LG 742 |
| 8089 | 33-035 | LG 742 |
| 8092 | 75-552 | LG 334 |
| 8098 | 72-795 | LG 1044 |
| 8112 | 49-023 | LG 629 |
| 8121 | 55-342 | LG 627 |
| 8122 | 55-343 | LG 627 |
| 8123 | 55-333 | LG 633 |
| 8124 | 55-334 | LG 633 |
| 813 | 45-205 | LG 228 |
| 8134 | 49-262 | LG 621 |
| 814 | 45-002 | LG 237 |
| 8161 | 55-332 | LG 633 |
| 8187 | 82-308 | LG 874 |
| 8190 | 09-804 | LG 233 |
| 8198 | 45-242 | LG 243 |
| 8201 | 72-309 | LG 1042 |
| 8207 | 51-013 | LG 725 |
| 8208 | 53-001 | LG 623 |
| 8216 | 72-099 | LG 1040 |
| 8219 | 55-903 | |
| 8221 | 55-804-1 | LG 994 |
| 8224 | 72-129 | LG 1041 |
| 8225 | 49-132 | LG 749 |
| 8226 | 49-129 | LG 745 |
| 8227 | 49-213 | LG 623 |
| 8228 | 49-114 | LG 746 |
| 8235 | 30-088 | LG 203 |
| 8238 | 55-611 | LG 192 |
| 8240 | 48-320 | LG 238 |
| 8242 | 50-545 | LG 748 |
| 8243 | 50-546 | LG 748 |
| 8244 | 72-098 | LG 1040 |
| 8248 | 48-051 | LG 725 |
| 8255 | 49-038 | LG 628 |
| 8260 | 49-877 | LG 613 |
| 8261 | 49-875 | LG 612 |
| 8264 | 70-701 | LG 964 |
| 8278 | 72-728 | LG 1044 |
| 8279 | 30-025 | LG 208 |
| 828 | 58-063 | LG 959 |
| 8285 | 07-314 | LG 773 |
| 8286 | 43-014 | LG 932 |
| 8287 | 55-811 | LG 933 |
| 8288 | 55-800 | LG 934 |
| 8289 | 55-820 | LG 935 |
| 8295 | 82-100 | LG 802 |
| 8298 | 72-100 | |
| 8299 | 72-322 | LG 1041 |
| 8300 | 72-323 | LG 1041 |
| 8305 | 45-127 | LG 244 |
| 8320 | 45-250 | LG 243 |
| 8323 | 04-006-0 | LG 686 |
| 8324 | 04-007 | LG 686 |
| 8327 | 30-019 | LG 208 |
| 8328 | 30-026 | LG 208 |
| 8329 | 30-089 | LG 204 |
| 8330 | 30-740 | LG 218 |
| 8332 | 30-102 | LG 220 |
| 8340 | 49-834 | LG 611 |
| 8341 | 49-833 | LG 611 |
| 8342 | 49-832 | LG 611 |
| 8343 | 04-125 | LG 694 |
| 8351 | 45-012 | LG 224 |
| 8364 | 49-001 | LG 622 |
| 8365 | 49-017 | LG 760 |
| 837 | 58-150 | LG 960 |
| 8372 | 48-141 | LG 249 |
| 8373 | 34-039 | LG 834 |
| 8377 | 72-800 | LG 1047 |
| 8380 | 49-008 | LG 623 |
| 8386 | 07-157 | LG 761 |
| 8388 | 41-926 | LG 1014 |
| 8390 | 41-928 | LG 1014 |
| 8391 | 41-936 | LG 1014 |
| 8397 | 56-001 | LG 687 |
| 8398 | 56-002 | LG 687 |
| 8399 | 56-003 | LG 687 |
| 8406 | 49-050 | LG 954 |
| 8407 | 49-051 | LG 954 |
| 8409 | 48-009 | LG 697 |
| 8413 | 50-543 | LG 748 |
| 8414 | 49-119 | LG 746 |
| 8415 | 46-300 | LG 717 |
| 8425 | 75-084 | LG 265 |
| 8426 | 75-336 | LG 334 |
| 8427 | 75-439 | LG 334 |
| 8428 | 75-096 | LG 265 |
| 8429 | 75-333 | LG 334 |
| 8431 | 75-117 | LG 265 |
| 8432 | 75-098 | LG 251 |
| 8437 | 45-130 | LG 232 |
| 8442 | 75-103 | LG 308 |
| 8443 | 75-151 | LG 308 |
| 8444 | 75-094 | LG 252 |
| 8445 | 45-007 | LG 853 |
| 8446 | 45-006 | LG 249 |
| 845 | 91-398 | LG 488 |
| 8456 | 70-315 | LG 960 |
| 8457 | 70-314 | LG 959 |
| 8458 | 41-930 | LG 1014 |
| 8459 | 41-931 | LG 1014 |
| 8460 | 41-932 | LG 1014 |
| 8461 | 41-933 | LG 1014 |
| 8462 | 75-163 | LG 261 |
| 8463 | 75-097 | LG 289 |
| 8465 | 75-108 | LG 289 |
| 8476 | 48-320 | LG 238 |
| 8478 | 34-021 | LG 833 |
| 8479 | 82-225 | LG 871 |
| 8480 | 30-450 | LG 189 |
| 8481 | 30-927 | LG 187 |
| 8482 | 30-038 | LG 187 |
| 8483 | 30-928 | |
| 8487 | 84-027 | LG 675 |
| 8488 | 45-225 | LG 232 |
| 849 | 92-011 | LG 490 |
| 8490 | 30-930 | LG 187 |
| 8491 | 33-032 | LG 742 |
| 8498 | 33-005 | LG 927 |
| 8505 | 30-457 | LG 202 |
| 8507 | 45-257 | LG 245 |
| 851 | 91-804 | LG 560 |
| 8510 | 75-218 | LG 316 |
| 8511 | 75-106 | LG 261 |
| 8514 | 58-110 | LG 960 |
| 8516 | 175-099 | LG 262 |
| 8516 | 75-099 | LG 262 |
| 8518 | 55-821 | LG 988 |
| 852 | 43-011 | LG 935 |
| 8521 | 55-816 | LG 988 |
| 8525 | 45-004 | LG 235 |
| 8526 | 55-132 | LG 773 |
| 853 | 45-083 | LG 246 |
| 8530 | 60-420 | LG 717 |
| 8532 | 55-118 | LG 630 |
| 8533 | 55-119 | LG 764 |
| 8534 | 55-112 | LG 778 |
| 8535 | 07-011 | LG 763 |
| 854 | 45-081 | LG 249 |
| 8540 | 70-308 | LG 959 |
| 8541 | 70-330 | LG 959 |
| 8542 | 58-072 | LG 959 |
| 8547 | 78-690 | LG 840 |
| 8548 | 82-220 | LG 871 |
| 8549 | 85-017 | LG 907 |
| 855 | 72-109 | LG 1037 |
| 8550 | 72-795 | LG 1044 |
| 8552 | 72-723 | LG 1043 |
| 8568 | 46-302 | LG 709 |
| 8570 | 55-186 | LG 1027 |
| 8585 | 30-931 | LG 191 |
| 8586 | 48-007 | LG 1039 |
| 8588 | 34-014 | LG 831 |
| 859 | 35-026 | LG 807 |
| 8591 | 49-307 | LG 625 |
| 8593 | 33-500-0 | LG 744 |
| 8596 | 47-689 | LG 743 |
| 8597 | 47-051 | LG 744 |
| 8598 | 47-050 | LG 744 |
| 860 | 43-012 | LG 927 |
| 8601 | 33-393 | LG 943 |
| 8602 | 34-041 | LG 831 |
| 8610 | 84-102 | LG 954 |
| 8611 | 84-103 | LG 954 |
| 8620 | 84-101 | LG 954 |
| 8627 | 80-743 | LG 852 |
| 8628 | 80-746 | LG 852 |
| 863 | 81-012 | LG 802 |
| 863 | 81-013 | LG 802 |
| 8631 | 83-012 | LG 819 |
| 8635 | 73-030 | LG 849 |
| 8636 | 58-398 | LG 959 |
| 864 | 84-006 | LG 675 |
| 8645 | 07-266 | LG 761 |
| 8647 | 82-495 | LG 870 |
| 8648 | 82-680 | LG 870 |
| 8649 | 82-679 | LG 870 |
| 865 | 84-009 | LG 675 |
| 8657 | 44-100 | LG 837 |
| 866 | 60-009 | LG 709 |
| 8660 | 79-000 | LG 802 |
| 8662 | 30-037 | LG 199 |
| 867 | 60-188 | LG 718 |
| 8675 | 07-404 | LG 766 |
| 8678 | 07-390 | LG 766 |
| 8679 | 07-391 | LG 766 |
| 868 | 07-403 | LG 766 |
| 8687 | 70-380 | LG 958 |
| 8688 | 70-357 | LG 958 |
| 869 | 75-354 | LG 319 |
| 8692 | 33-343 | LG 787 |
| 8693 | 33-346 | LG 786 |
| 8694 | 71-109 | LG 956 |
| 8694 | 71-401 | LG 956 |
| 870 | 175-105 | LG 319 |
| 870 | 75-105 | LG 319 |
| 8712 | 30-943 | LG 206 |
| 8713 | 55-510 | LG 212 |
| 8714 | 75-044 | LG 313 |
| 8716 | 30-956 | LG 216 |
| 872 | 72-420 | LG 1047 |
| 8720 | 40-707 | LG 590 |
| 8721 | 73-561 | LG 843 |
| 8733 | 75-144 | LG 284 |
| 8735 | 55-201 | LG 190 |
| 8737 | 55-018 | LG 771 |
| 8746 | 49-069 | LG 746 |
| 8747 | 75-122 | LG 307 |
| 875 | 43-100 | LG 932 |
| 8750 | 55-186 | LG 1027 |
| 8751 | 49-034 | LG 630 |
| 8752 | 65-006 | LG 340 |
| 8753 | 65-007 | LG 342 |
| 8755 | 41-008 | LG 590 |
| 876 | 43-200 | LG 932 |

X

## ROTARY

| PART No. | OREGON | Page |
|---|---|---|
| 8761 | 75-123 | LG 300 |
| 8765 | 60-428 | LG 720 |
| 8771 | 33-341 | LG 784 |
| 878 | 71-511 | LG 956 |
| 8781 | 75-196 | LG 290 |
| 8784 | 75-167 | LG 289 |
| 8785 | 30-030 | LG 218 |
| 8786 | 33-053 | LG 789 |
| 8789 | 49-413 | LG 749 |
| 879 | 58-001 | LG 961 |
| 8796 | 45-013 | LG 853 |
| 8797 | 49-031 | LG 746 |
| 880 | 71-274 | LG 956 |
| 8803 | 75-180 | LG 254 |
| 8805 | 75-113 | LG 281 |
| 8809 | 75-130 | LG 269 |
| 8810 | 75-095 | LG 268 |
| 8811 | 75-125 | LG 269 |
| 8814 | 30-762 | LG 183 |
| 8815 | 30-029 | LG 181 |
| 8825 | 49-204 | LG 749 |
| 8828 | 73-031 | LG 850 |
| 8829 | 34-032 | LG 834 |
| 883 | 58-064 | LG 959 |
| 8831 | 45-242 | LG 243 |
| 884 | 71-250 | LG 956 |
| 8861 | 45-243 | LG 243 |
| 8869 | 45-255 | LG 224 |
| 8869 | 45-267 | LG 235 |
| 8887 | 75-938 | LG 250 |
| 8888 | 70-377 | LG 960 |
| 8896 | 70-142 | LG 958 |
| 8897 | 33-034 | LG 742 |
| 8898 | 76-073-0 | LG 726 |
| 8899 | 07-024 | LG 771 |
| 8903 | 30-027 | LG 194 |
| 8904 | 30-452 | LG 195 |
| 8906 | 30-015 | LG 194 |
| 891 | 35-021 | LG 810 |
| 8915 | 70-376 | LG 958 |
| 8918 | 70-375 | LG 958 |
| 8919 | 70-358 | LG 958 |
| 892 | 35-004 | LG 806 |
| 8926 | 49-308 | LG 625 |
| 8934 | 07-317 | LG 771 |
| 8935 | 07-309 | LG 772 |
| 8936 | 07-309 | LG 772 |
| 8938 | 80-748 | LG 852 |
| 8939 | 70-333 | LG 963 |
| 8943 | 33-336 | LG 730 |
| 8950 | 76-100 | LG 939 |
| 8951 | 49-412 | LG 745 |
| 8952 | 49-831 | LG 612 |
| 8953 | 02-403 | LG 790 |
| 8955 | 02-406 | LG 790 |
| 8958 | 49-058 | LG 768 |
| 8959 | 49-079 | LG 768 |
| 8961 | 60-427 | LG 717 |
| 8965 | 44-368 | LG 837 |
| 8966 | 30-945 | LG 207 |
| 8967 | 82-502 | LG 894 |
| 8968 | 82-503 | LG 895 |
| 8969 | 33-401 | LG 732 |
| 8972 | 175-135 | LG 308 |
| 8972 | 75-135 | LG 308 |
| 8977 | 57-017 | LG 677 |
| 8979 | 86-019 | LG 781 |
| 898 | 71-104 | LG 956 |
| 8984 | 45-040 | LG 249 |
| 8985 | 48-006 | LG 694 |
| 899 | 71-098 | LG 956 |
| 8993 | 73-026 | LG 851 |
| 8998 | 45-060 | LG 234 |
| 8999 | 45-015 | LG 233 |
| 900 | 71-097 | LG 956 |
| 9000 | 45-014 | LG 225 |
| 9014 | 75-188 | LG 256 |
| 9016 | 75-186 | LG 281 |
| 9024 | 07-214 | LG 779 |
| 9025 | 07-219 | LG 779 |
| 9026 | 55-008 | LG 771 |
| 903 | 58-011 | LG 957 |
| 9044 | 45-022 | LG 243 |
| 9045 | 55-813 | LG 933 |
| 9046 | 73-025 | LG 855 |
| 9048 | 55-122 | LG 770 |
| 9064 | 31-020 | LG 923 |
| 9065 | 31-910 | LG 929 |
| 9066 | 30-003 | LG 190 |
| 9067 | 30-009 | LG 190 |
| 9078 | 72-024 | LG 1035 |
| 908 | 58-131 | LG 960 |
| 9091 | 42-552 | |
| 9108 | 75-910 | LG 331 |
| 9114 | 31-911 | LG 929 |
| 9119 | 75-159 | LG 303 |
| 9120 | 75-161 | LG 255 |
| 9122 | 73-100 | LG 850 |
| 9131 | 60-012-0 | LG 712 |
| 9133 | 46-323 | LG 712 |
| 9134 | 46-319 | LG 712 |
| 9135 | 60-184 | LG 720 |
| 9137 | 07-208 | LG 779 |
| 9138 | 07-209 | LG 779 |
| 9139 | 07-210 | LG 779 |
| 9140 | 07-211 | LG 779 |
| 9142 | 06-003 | LG 805 |
| 9143 | 06-004 | LG 805 |
| 9145 | 44-364 | LG 728 |
| 9146 | 07-104 | LG 776 |
| 9147 | 07-011 | LG 763 |
| 9148 | 44-371 | LG 834 |
| 9153 | 82-325 | LG 903 |
| 9154 | 70-353 | LG 958 |
| 9157 | 21-555 | LG 981 |
| 9158 | 33-397 | LG 942 |
| 9159 | 45-132 | LG 939 |
| 916 | 80-740 | LG 852 |
| 9160 | 45-404 | LG 234 |
| 9166 | 33-398 | LG 944 |
| 9167 | 30-761 | LG 183 |
| 9168 | 30-033 | LG 183 |
| 917 | 80-741 | LG 852 |
| 9170 | 95-045 | LG 374 |
| 9170 | 95-052 | LG 398 |
| 9171 | 91-503 | LG 424 |
| 918 | 80-742 | LG 852 |
| 9185 | 70-365 | LG 961 |
| 9186 | 70-366 | LG 961 |
| 9187 | 70-367 | LG 961 |
| 9188 | 70-368 | LG 961 |
| 9189 | 70-370 | LG 961 |
| 9190 | 70-373 | LG 961 |
| 9199 | 49-270 | LG 619 |
| 9200 | 30-031 | LG 218 |
| 9201 | 58-399 | LG 960 |
| 9204 | 33-402 | LG 731 |
| 9206 | 33-414 | LG 741 |
| 9207 | 33-415 | LG 741 |
| 9219 | 33-761 | LG 926 |
| 9224 | 55-741 | LG 1019 |
| 9227 | 07-213 | LG 777 |
| 9229 | 96-344 | LG 536 |
| 9244 | 49-817-0 | LG 616 |
| 9244 | 49-864 | LG 616 |
| 9245 | 30-944 | LG 207 |
| 9257 | 75-177 | LG 281 |
| 9261 | 50-412 | LG 745 |
| 9268 | 05-070 | LG 914 |
| 9273 | 30-032 | LG 182 |
| 9284 | 82-512 | LG 895 |
| 9285 | 82-511 | LG 895 |
| 9286 | 82-515 | LG 896 |
| 9287 | 82-516 | LG 896 |
| 9288 | 82-513-2 | LG 896 |
| 9289 | 49-085 | LG 769 |
| 9292 | 30-329 | LG 202 |
| 9293 | 33-347 | LG 784 |
| 9294 | 07-125 | LG 766 |
| 9297 | 49-865 | LG 616 |
| 9298 | 49-866 | LG 617 |
| 9299 | 55-069-0 | LG 993 |
| 9300 | 55-069-0 | LG 993 |
| 9303 | 45-003 | LG 244 |
| 9304 | 30-914 | LG 187 |
| 9307 | 45-303 | LG 804 |
| 9311 | 45-300 | LG 804 |
| 9313 | 75-129 | LG 255 |
| 9325 | 70-349 | LG 959 |
| 9327 | 45-113 | LG 242 |
| 9330 | 33-396 | LG 944 |
| 9331 | 33-392 | LG 944 |
| 9332 | 21-155 | LG 981 |
| 9336 | 175-000 | LG 262 |
| 9336 | 75-000 | LG 262 |
| 9341 | 31-140 | LG 937 |
| 9342 | 31-642 | LG 937 |
| 9343 | 31-650 | LG 937 |
| 9344 | 31-152 | LG 937 |
| 9345 | 31-160 | LG 937 |
| 9353 | 33-762-0 | LG 926 |
| 9358 | 33-244 | LG 786 |
| 9361 | 83-010 | LG 819 |
| 9362 | 33-003 | LG 926 |
| 9363 | 33-007 | LG 926 |
| 9367 | 175-195 | LG 289 |
| 9367 | 75-195 | LG 254 |
| 9368 | 175-169 | LG 290 |
| 9368 | 75-169 | LG 290 |
| 9369 | 33-317-0 | LG 729 |
| 9370 | 33-200 | LG 866 |
| 9375 | 82-320 | LG 874 |
| 9376 | 34-046 | LG 824 |
| 9377 | 78-065 | LG 832 |
| 9380 | 83-011 | LG 819 |
| 9383 | 55-069-0 | LG 993 |
| 9397 | 78-680 | LG 840 |
| 9477 | 49-026 | LG 769 |
| 9478 | 49-020 | LG 631 |
| 9479 | 49-027 | LG 769 |
| 9480 | 75-675 | LG 303 |
| 9482 | 75-118 | LG 302 |
| 9487 | 91-313 | LG 494 |
| 9488 | 31-063 | LG 932 |
| 9495 | 58-360 | LG 958 |
| 9496 | 55-326 | LG 1021 |
| 9500 | 70-409 | LG 960 |
| 9506 | 30-322 | LG 200 |
| 9508 | 44-500 | LG 840 |
| 9514 | 44-331 | LG 841 |
| 9518 | 85-049 | LG 906 |
| 9519 | 82-510 | LG 872 |
| 9520 | 85-023 | LG 907 |
| 9521 | 82-221 | LG 872 |
| 9527 | 43-425 | LG 936 |
| 9533 | 30-142 | LG 217 |
| 9542 | 78-055 | LG 833 |
| 9543 | 78-049 | LG 833 |
| 9544 | 78-129 | LG 830 |
| 9549 | 70-362 | LG 958 |
| 9550 | 30-075 | LG 185 |
| 9565 | 81-012 | LG 802 |
| 9566 | 46-325 | LG 701 |
| 9570 | 75-024 | LG 302 |
| 9575 | 85-034 | LG 908 |
| 9577 | 35-038 | LG 808 |
| 9581 | 75-109 | LG 303 |
| 9583 | 30-055 | LG 204 |
| 9584 | 30-054 | LG 200 |
| 9585 | 30-527 | LG 202 |
| 9587 | 44-369 | LG 837 |
| 9589 | 44-101 | LG 837 |
| 9591 | 30-309 | LG 199 |
| 9592 | 30-915 | LG 187 |
| 9594 | 19-003 | LG 983 |
| 9595 | 19-002 | LG 983 |
| 9596 | 19-005 | LG 983 |
| 9597 | 19-001 | LG 983 |
| 9600 | 78-003 | LG 839 |
| 9603 | 07-319 | LG 771 |
| 9604 | 55-126 | LG 771 |
| 9607 | 55-157 | LG 763 |
| 9608 | 55-249 | LG 215 |
| 9609 | 55-245 | LG 215 |
| 9611 | 30-940 | LG 202 |
| 9614 | 30-331 | LG 203 |
| 9617 | 55-158 | LG 934 |
| 9618 | 71-096 | LG 956 |
| 9618 | 71-610 | LG 956 |
| 9620 | 71-276 | LG 956 |
| 9621 | 71-096 | LG 956 |
| 9622 | 33-024 | LG 945 |
| 9623 | 33-383 | LG 944 |
| 9627 | 30-148 | LG 198 |

# 2019 Aftermarket X-Reference

## ROTARY

| PART No. | OREGON | Page |
|---|---|---|
| 965 | 69-262-0 | |
| 9652 | 55-124 | LG 771 |
| 9655 | 33-074 | LG 944 |
| 9656 | 33-081 | LG 946 |
| 9656 | 33-093 | LG 946 |
| 9657 | 33-002 | LG 946 |
| 9658 | 33-027 | LG 947 |
| 9659 | 33-028 | LG 947 |
| 9660 | 33-015 | LG 948 |
| 9661 | 33-084 | LG 948 |
| 9662 | 33-085 | LG 948 |
| 9664 | 33-019 | LG 948 |
| 9665 | 33-026 | LG 947 |
| 9679 | 60-000 | LG 702 |
| 9680 | 60-004 | LG 701 |
| 9681 | 60-002 | LG 710 |
| 9682 | 60-124 | LG 710 |
| 9683 | 60-003 | LG 710 |
| 9685 | 60-006 | LG 716 |
| 9686 | 55-255 | LG 1019 |
| 9687 | 55-256 | LG 1019 |
| 9693 | 60-125 | LG 718 |
| 9694 | 46-416 | LG 718 |
| 9697 | 175-197 | LG 290 |
| 9697 | 75-197 | LG 262 |
| 9698 | 175-170 | LG 290 |
| 9698 | 75-170 | LG 290 |
| 9711 | 70-364 | LG 961 |
| 9712 | 75-266 | LG 254 |
| 9713 | 75-210 | LG 309 |
| 9714 | 75-267 | LG 309 |
| 9715 | 75-964 | LG 309 |
| 9717 | 05-001 | LG 913 |
| 9728 | 30-056 | LG 208 |
| 9731 | 50-414 | LG 751 |
| 9732 | 50-419 | LG 751 |
| 9744 | 70-372 | LG 961 |
| 9745 | 45-073 | LG 227 |
| 9765 | 75-889 | LG 252 |
| 977 | 90-142 | LG 368 |
| 9772 | 78-005 | LG 823 |
| 9776 | 55-244 | LG 215 |
| 978 | 90-143 | LG 368 |
| 9782 | 50-416 | LG 751 |
| 9783 | 50-417 | LG 751 |
| 9784 | 50-418 | LG 751 |
| 9785 | 50-556 | LG 753 |
| 9786 | 50-554 | LG 753 |
| 979 | 90-144 | LG 368 |
| 9790 | 30-066 | |
| 9796 | 33-700 | LG 915 |
| 9797 | 33-771 | LG 916 |
| 9798 | 33-708 | LG 915 |
| 9798 | 33-778 | LG 915 |
| 9799 | 33-709 | LG 916 |
| 980 | 90-145 | LG 368 |
| 9800 | 33-702 | LG 919 |
| 9802 | 33-704 | LG 919 |
| 9802 | 33-774 | LG 919 |
| 9807 | 49-231 | LG 630 |
| 981 | 90-146 | LG 368 |
| 9810 | 195-067 | LG 380 |
| 9814 | 33-707 | LG 920 |
| 9814 | 33-777 | LG 920 |
| 9815 | 80-145 | LG 341 |
| 9816 | 42-081 | LG 742 |
| 9826 | 36-521 | LG 755 |
| 9827 | 36-522 | LG 755 |
| 9829 | 36-523 | LG 755 |
| 9830 | 36-325 | LG 755 |
| 9831 | 36-326 | LG 755 |
| 9832 | 36-140 | LG 755 |
| 9833 | 36-141 | LG 755 |
| 9834 | 36-142 | LG 755 |
| 9837 | 36-143 | LG 755 |
| 9838 | 50-553 | LG 752 |
| 9841 | 30-018 | LG 198 |
| 9843 | 50-415 | LG 751 |
| 9844 | 78-007 | LG 833 |
| 9847 | 75-160 | LG 303 |
| 9848 | 175-164 | LG 262 |
| 9848 | 75-164 | LG 262 |
| 9849 | 34-049 | LG 824 |
| 9852 | 30-321 | LG 199 |
| 9853 | 33-399 | LG 944 |
| 9854 | 33-006 | LG 927 |
| 9855 | 60-014 | LG 712 |
| 9861 | 75-066 | LG 251 |
| 9862 | 75-960 | LG 257 |
| 9863 | 75-234 | LG 281 |
| 9864 | 78-011 | LG 827 |
| 9865 | 78-048 | LG 833 |
| 9875 | 72-450 | LG 1037 |
| 9881 | 70-302 | LG 959 |
| 9883 | 96-341 | LG 446 |
| 9884 | 96-327 | LG 417 |
| 9885 | 94-615 | LG 370 |
| 9888 | 70-392 | LG 961 |
| 9891 | 78-009 | LG 827 |
| 9895 | 78-010 | LG 827 |
| 9896 | 97-012 | LG 537 |
| 9897 | 97-013 | LG 526 |
| 9900 | 75-079 | LG 301 |
| 9901 | 75-339 | LG 334 |
| 9903 | 175-824 | LG 274 |
| 9903 | 75-824 | LG 274 |
| 9906 | 85-028 | LG 908 |
| 9907 | 195-062 | LG 376 |
| 9909 | 30-068 | LG 212 |
| 9910 | 33-110 | LG 735 |
| 9911 | 33-112 | LG 735 |
| 9912 | 33-111 | LG 735 |
| 9913 | 33-113 | LG 740 |
| 9928 | 55-247 | LG 214 |
| 9931 | 33-038 | LG 742 |
| 9932 | 75-674 | LG 303 |
| 9935 | 75-361 | LG 254 |
| 9945 | 75-194 | LG 289 |
| 9947 | 72-741 | LG 1046 |
| 9948 | 07-084 | LG 768 |
| 9948 | 49-028 | LG 769 |
| 9953 | 30-347 | LG 194 |
| 9959 | 91-449 | LG 492 |
| 9962 | 73-039 | LG 846 |
| 9964 | 75-898 | LG 262 |
| 9966 | 70-369 | LG 961 |
| 9970 | 95-614 | LG 375 |
| 9971 | 49-009 | LG 625 |
| 9972 | 48-236 | LG 724 |
| 9974 | 33-719 | LG 915 |
| 9975 | 33-710 | LG 918 |
| 9976 | 33-715 | LG 919 |
| 9977 | 33-718 | LG 919 |
| 9979 | 33-712 | LG 921 |
| 9980 | 33-711 | LG 921 |
| 9980 | 33-791 | LG 921 |
| 9981 | 33-713 | LG 921 |
| 9981 | 33-739 | LG 921 |
| 9987 | 91-209 | LG 552 |
| 9988 | 91-368 | LG 460 |
| 9990 | 33-716 | LG 921 |
| 9994 | 75-042 | LG 308 |
| 9995 | 75-209 | LG 308 |
| 9997 | 33-722 | LG 918 |

## RURAL KING

| PART No. | OREGON | Page |
|---|---|---|
| 066891923 | 98-072 | LG 408 |
| 18900260 | 195-021 | LG 468 |
| 18900299 | 195-033 | LG 400 |
| 18900309 | 195-005 | LG 373 |
| 18900310 | 195-032 | LG 425 |
| 18900370 | 69-260-0 | |
| 18901230 | 69-260-0 | |
| 18901243 | 69-261-0 | |
| 18901256 | 69-262-0 | |
| 66291109 | 195-021 | LG 468 |
| 66291167 | 195-072 | LG 530 |
| 66291196 | 195-062 | LG 376 |
| 66291206 | 195-033 | LG 400 |
| 66291219 | 195-032 | LG 425 |
| 66291222 | 95-044 | LG 465 |
| 66291426 | 95-074 | LG 533 |
| 66891172 | 98-499 | LG 519 |
| 66891198 | 98-057 | LG 513 |
| 66891350 | 198-058 | LG 517 |
| 66891363 | 198-059 | LG 403 |
| 66891376 | 98-054 | LG 574 |
| 66891402 | 98-051 | LG 521 |
| 66891787 | 198-049 | LG 518 |
| 66891907 | 98-629 | LG 412 |
| 66891965 | 198-086 | LG 565 |
| 66891978 | 191-392 | LG 488 |
| 66891981 | 191-139 | LG 491 |
| 66891994 | 191-108 | LG 484 |
| 66892029 | 98-093 | LG 411 |
| 66892300 | 98-096 | LG 404 |
| 66892301 | 95-051 | LG 465 |
| 66892302 | 95-057 | LG 380 |
| 66892303 | 98-054 | LG 574 |
| 66892304 | 195-003 | LG 400 |
| 66892305 | 97-024 | LG 525 |
| 66892306 | 96-900 | LG 526 |
| 66892307 | 92-615 | LG 491 |

## SEARS

| PART No. | OREGON | Page |
|---|---|---|
| 07133022000P | 98-093 | LG 411 |
| 07133032000P | 198-153 | LG 520 |
| 07133034000P | 95-602 | LG 403 |
| 07133049000P | 98-629 | LG 412 |
| 07133058000P | 95-621 | LG 402 |
| 07133256000P | 195-021 | LG 468 |

## STENS

| PART No. | OREGON | Page |
|---|---|---|
| “ | | |
| 450-007” | 33-182-0 | LG 789 |
| 025-503 | 27-500 | LG 724 |
| 025-507 | 27-502 | LG 725 |
| 025-515 | 27-501 | LG 724 |
| 050-009 | 30-419 | LG 221 |
| 050-017 | 30-423 | LG 221 |
| 050-021 | 30-412 | LG 220 |
| 050-029 | 30-418 | LG 221 |
| 050-804 | 69-395 | LG 206 |
| 050-808 | 30-845 | LG 208 |
| 050-814 | 30-835 | LG 200 |
| 050-814 | 69-322 | LG 200 |
| 050-821 | 30-717 | LG 221 |
| 051-579 | 4205M | LG 761 |
| 054-007 | 69-322 | LG 200 |
| 054-012 | 30-441 | LG 202 |
| 054-023 | 30-327 | LG 199 |
| 054-043 | 30-935 | LG 201 |
| 054-059 | 07-062 | LG 775 |
| 054-063 | 30-527 | LG 202 |
| 054-071 | 07-122 | LG 775 |
| 054-095 | 33-246 | LG 732 |
| 054-095 | 33-407 | LG 732 |
| 054-163 | 30-328 | LG 200 |
| 054-187 | 30-940 | LG 202 |
| 054-239 | 30-966 | LG 203 |
| 054-259 | 30-164 | LG 200 |
| 054-303 | 30-157 | LG 201 |
| 054-307 | 30-158 | LG 201 |
| 054-900 | 30-185 | LG 203 |
| 055-025 | 69-395 | LG 206 |
| 055-053 | 30-125 | LG 206 |
| 055-057 | 30-941 | LG 219 |
| 055-065 | 30-946 | LG 207 |
| 055-069 | 30-947 | LG 207 |
| 055-085 | 30-944 | LG 207 |
| 055-109 | 83-503 | LG 818 |
| 055-117 | 07-331 | LG 776 |
| 055-121 | 07-332 | LG 776 |
| 055-145 | 33-628 | LG 789 |
| 055-233 | 33-518 | LG 785 |
| 055-266 | 30-459 | LG 207 |
| 055-481 | 33-519 | LG 785 |
| 055-513 | 49-700 | LG 605 |
| 055-565 | 30-845 | LG 208 |
| 056-006 | 30-205 | LG 219 |
| 056-010 | 49-840 | LG 609 |
| 056-066 | 69-331 | LG 218 |
| 056-070 | 31-904 | LG 930 |
| 056-074 | 31-907 | LG 929 |
| 056-086 | 49-029 | LG 609 |
| 056-094 | 49-239 | LG 609 |
| 056-102 | 33-606 | LG 789 |
| 056-118 | 33-346 | LG 786 |
| 056-126 | 33-343 | LG 787 |
| 056-146 | 31-116 | LG 925 |
| 056-154 | 49-916 | LG 629 |

X

## STENS

| PART No. | OREGON | Page |
|---|---|---|
| 056-158 | 49-019 | LG 609 |
| 092-410 | 58-012 | LG 957 |
| 092-4107 | 58-012 | LG 957 |
| 095-362 | 58-112 | LG 960 |
| 095-3627 | 58-112 | LG 960 |
| 100-008 | 30-070 | LG 216 |
| 100-008 | 30-822 | LG 216 |
| 100-009 | 30-325 | LG 199 |
| 100-012 | 30-417 | LG 193 |
| 100-012 | 30-454 | LG 195 |
| 100-012 | 69-007 | LG 193 |
| 100-016 | 30-095 | LG 206 |
| 100-016 | 69-395 | LG 206 |
| 100-024 | 30-081 | LG 205 |
| 100-032 | 30-082 | LG 205 |
| 100-036 | 30-136 | LG 182 |
| 100-040 | 30-080 | LG 205 |
| 100-040 | 30-819 | LG 205 |
| 100-044 | 30-305 | LG 198 |
| 100-048 | 30-936 | LG 202 |
| 100-052 | 30-311 | LG 199 |
| 100-056 | 30-938 | LG 202 |
| 100-065 | 30-093 | LG 206 |
| 100-069 | 30-102 | LG 220 |
| 100-073 | 30-044 | LG 179 |
| 100-081 | 30-132 | LG 179 |
| 100-085 | 30-049 | LG 181 |
| 100-089 | 30-048 | LG 182 |
| 100-089 | 30-820 | LG 182 |
| 100-093 | 30-033 | LG 183 |
| 100-099 | 30-097 | LG 179 |
| 100-107 | 30-098 | LG 206 |
| 100-115 | 30-100 | LG 217 |
| 100-131 | 30-101 | LG 179 |
| 100-149 | 30-430 | LG 211 |
| 100-149 | 30-846 | LG 211 |
| 100-153 | 30-032 | LG 182 |
| 100-153 | 30-136 | LG 182 |
| 100-160 | 30-322 | LG 200 |
| 100-160 | 30-835 | LG 200 |
| 100-160 | 69-322 | LG 200 |
| 100-164 | 30-104 | LG 180 |
| 100-168 | 30-940 | LG 202 |
| 100-176 | 30-914 | LG 187 |
| 100-180 | 30-091 | LG 217 |
| 100-184 | 30-029 | LG 181 |
| 100-188 | 30-309 | LG 199 |
| 100-192 | 30-930 | LG 187 |
| 100-198 | 30-105 | LG 179 |
| 100-202 | 30-939 | LG 202 |
| 100-210 | 30-321 | LG 199 |
| 100-214 | 30-094 | LG 180 |
| 100-219 | 30-925 | LG 187 |
| 100-222 | 30-301 | LG 217 |
| 100-226 | 30-038 | LG 187 |
| 100-227 | 30-926 | LG 187 |
| 100-234 | 30-928 | |
| 100-238 | 30-018 | LG 198 |
| 100-238 | 30-329 | LG 202 |
| 100-256 | 30-037 | LG 199 |
| 100-256 | 30-457 | LG 202 |
| 100-263 | 30-421 | LG 220 |
| 100-287 | 30-067 | LG 212 |
| 100-293 | 55-201 | LG 190 |
| 100-317 | 30-030 | LG 218 |
| 100-325 | 30-721 | LG 213 |
| 100-347 | 30-303 | LG 198 |
| 100-354 | 30-935 | LG 201 |
| 100-374 | 30-810 | LG 198 |
| 100-378 | 30-190 | LG 207 |
| 100-378 | 30-709 | LG 194 |
| 100-378 | 30-828 | LG 194 |
| 100-378 | 30-932 | LG 196 |
| 100-392 | 55-510 | LG 212 |
| 100-412 | 30-711 | LG 218 |
| 100-416 | 30-003 | LG 190 |
| 100-428 | 30-317 | LG 194 |
| 100-442 | 30-961 | LG 187 |
| 100-446 | 30-927 | LG 187 |
| 100-450 | 30-740 | LG 218 |
| 100-465 | 30-025 | LG 208 |
| 100-469 | 30-019 | LG 208 |
| 100-479 | 30-117 | LG 219 |
| 100-487 | 30-106 | LG 179 |
| 100-503 | 30-903 | LG 186 |
| 100-511 | 30-906 | LG 185 |
| 100-519 | 30-026 | LG 208 |
| 100-529 | 30-907 | LG 186 |
| 100-533 | 30-075 | LG 185 |
| 100-533 | 30-708 | LG 204 |
| 100-537 | 30-908 | LG 185 |
| 100-541 | 30-712 | LG 205 |
| 100-545 | 30-909 | LG 186 |
| 100-552 | 30-910 | LG 186 |
| 100-560 | 30-911 | |
| 100-564 | 30-959 | LG 219 |
| 100-572 | 30-702 | LG 185 |
| 100-576 | 30-931 | LG 191 |
| 100-582 | 55-231 | LG 212 |
| 100-586 | 30-950 | LG 209 |
| 100-606 | 30-957 | LG 209 |
| 100-610 | 30-205 | LG 219 |
| 100-622 | 30-054 | LG 200 |
| 100-622 | 30-163 | LG 200 |
| 100-622 | 30-527 | LG 202 |
| 100-632 | 30-919 | LG 188 |
| 100-640 | 30-073 | LG 183 |
| 100-648 | 30-077 | LG 188 |
| 100-656 | 30-157 | LG 201 |
| 100-660 | 30-158 | LG 201 |
| 100-667 | 30-706 | LG 201 |
| 100-669 | 30-923 | LG 186 |
| 100-673 | 30-172 | LG 184 |
| 100-685 | 30-920 | LG 186 |
| 100-713 | 30-956 | LG 216 |
| 100-719 | 30-400 | LG 193 |
| 100-727 | 30-954 | LG 220 |
| 100-743 | 30-929 | LG 187 |
| 100-750 | 15-890 | LG 327 |
| 100-750 | 30-941 | LG 219 |
| 100-754 | 30-945 | LG 207 |
| 100-758 | 30-089 | LG 204 |
| 100-766 | 30-159 | LG 205 |
| 100-768 | 30-946 | LG 207 |
| 100-770 | 30-460 | LG 207 |
| 100-774 | 30-130 | LG 205 |
| 100-780 | 30-056 | LG 208 |
| 100-784 | 30-404 | LG 192 |
| 100-784 | 30-506 | LG 195 |
| 100-788 | 30-139 | LG 183 |
| 100-792 | 30-403 | LG 192 |
| 100-800 | 30-134 | LG 180 |
| 100-808 | 30-066 | |
| 100-812 | 30-031 | LG 218 |
| 100-812 | 69-331 | LG 218 |
| 100-818 | 30-406 | LG 193 |
| 100-834 | 30-123 | LG 183 |
| 100-842 | 30-924 | LG 186 |
| 100-859 | 55-611 | LG 192 |
| 100-871 | 30-039 | LG 182 |
| 100-875 | 30-953 | LG 211 |
| 100-883 | 30-112 | LG 218 |
| 100-887 | 30-736 | LG 185 |
| 100-891 | 30-107 | LG 180 |
| 100-895 | 30-024 | LG 218 |
| 100-909 | 30-111 | LG 217 |
| 100-913 | 30-161 | LG 184 |
| 100-929 | 30-167 | LG 184 |
| 100-937 | 30-815 | LG 203 |
| 100-941 | 30-085 | LG 203 |
| 100-945 | 30-416 | LG 214 |
| 100-945 | 30-837 | LG 214 |
| 100-949 | 55-247 | LG 214 |
| 100-953 | 30-943 | LG 206 |
| 100-957 | 30-088 | LG 203 |
| 100-957 | 30-834 | LG 203 |
| 100-958 | 30-318 | LG 193 |
| 100-978 | 69-007 | LG 193 |
| 102-008 | 30-145 | LG 184 |
| 102-020 | 30-731 | LG 180 |
| 102-024 | 30-735 | LG 181 |
| 102-024 | 30-826 | LG 181 |
| 102-032 | 30-182 | LG 185 |
| 102-087 | 30-412 | LG 220 |
| 102-091 | 30-915 | LG 187 |
| 102-095 | 30-410 | LG 220 |
| 102-111 | 30-951 | LG 219 |
| 102-119 | 30-087 | LG 182 |
| 102-129 | 30-184 | LG 186 |
| 102-149 | 30-027 | LG 194 |
| 102-149 | 30-452 | LG 195 |
| 102-164 | 30-436 | LG 194 |
| 102-182 | 30-327 | LG 199 |
| 102-190 | 30-186 | LG 184 |
| 102-194 | 30-916 | LG 185 |
| 102-218 | 30-064 | LG 194 |
| 102-226 | 30-762 | LG 183 |
| 102-230 | 30-028 | LG 182 |
| 102-236 | 30-304 | LG 199 |
| 102-244 | 30-405 | LG 193 |
| 102-263 | 30-015 | LG 194 |
| 102-263 | 30-843 | LG 194 |
| 102-285 | 30-141 | LG 217 |
| 102-305 | 30-055 | LG 204 |
| 102-305 | 30-845 | LG 208 |
| 102-309 | 30-023 | LG 205 |
| 102-319 | 30-430 | LG 211 |
| 102-331 | 30-944 | LG 207 |
| 102-335 | 30-947 | LG 207 |
| 102-350 | 30-125 | LG 206 |
| 102-354 | 30-057 | LG 200 |
| 102-358 | 30-706 | LG 201 |
| 102-362 | 30-441 | LG 202 |
| 102-366 | 30-966 | LG 203 |
| 102-370 | 30-705 | LG 200 |
| 102-396 | 30-173 | LG 184 |
| 102-400 | 30-116 | LG 219 |
| 102-404 | 55-079 | LG 214 |
| 102-414 | 30-137 | LG 214 |
| 102-418 | 30-942 | LG 206 |
| 102-422 | 30-346 | LG 195 |
| 102-442 | 30-164 | LG 200 |
| 102-450 | 30-443 | LG 218 |
| 102-491 | 30-937 | LG 202 |
| 102-495 | 30-952 | LG 219 |
| 102-525 | 30-917 | LG 186 |
| 102-533 | 30-700 | LG 180 |
| 102-541 | 30-720 | LG 180 |
| 102-549 | 30-710 | LG 181 |
| 102-561 | 30-121 | LG 190 |
| 102-561 | 30-831 | LG 190 |
| 102-565 | 30-119 | LG 191 |
| 102-565 | 30-830 | LG 191 |
| 102-569 | 30-439-1 | LG 190 |
| 102-573 | 30-183 | LG 189 |
| 102-582 | 30-187 | LG 192 |
| 102-582 | 30-401 | LG 193 |
| 102-602 | 30-068 | LG 212 |
| 102-606 | 30-955 | LG 212 |
| 102-644 | 55-515 | LG 211 |
| 102-664 | 30-974 | LG 188 |
| 102-676 | 30-921 | LG 202 |
| 102-689 | 30-963 | LG 195 |
| 102-713 | 30-347 | LG 194 |
| 102-715 | 30-413 | LG 221 |
| 102-719 | 30-437 | LG 192 |
| 102-731 | 30-704 | LG 194 |
| 102-851 | 30-168 | LG 185 |
| 102-863 | 30-960 | LG 187 |
| 102-871 | 30-076 | LG 188 |
| 102-875 | 30-074 | LG 183 |
| 102-875 | 30-122 | LG 183 |
| 102-875 | 30-829 | LG 183 |
| 102-902 | 30-761 | LG 183 |
| 102-910 | 30-108 | LG 180 |
| 102-918 | 30-188 | |
| 1031 | 98-099 | LG 412 |
| 10421 | 92-742 | LG 475 |
| 105-007 | 35-001 | LG 806 |
| 105-007 | 35-007 | LG 806 |
| 105-049 | 35-003 | LG 809 |
| 105-064 | 35-002 | LG 806 |
| 105-106 | 35-005 | LG 806 |
| 105-114 | 35-015 | LG 810 |
| 105-122 | 35-006 | LG 808 |
| 105-130 | 35-008 | LG 808 |
| 105-148 | 35-004 | LG 806 |
| 105-155 | 35-014 | LG 806 |
| 105-163 | 35-012 | LG 806 |
| 105-189 | 35-016 | LG 809 |
| 105-205 | 35-028 | LG 810 |
| 105-213 | 35-032 | LG 809 |
| 105-254 | 35-026 | LG 807 |
| 105-262 | 35-543 | LG 807 |

# 2019 Aftermarket X-Reference

## STENS

| PART No. | OREGON | Page |
|---|---|---|
| 105-288 | 35-022 | LG 807 |
| 105-304 | 35-033 | LG 809 |
| 105-346 | 35-021 | LG 810 |
| 105-501 | 35-023 | LG 806 |
| 105-701 | 35-034 | LG 807 |
| 105-701 | 35-043 | LG 808 |
| 105-705 | 35-036 | LG 807 |
| 105-705 | 35-044 | LG 808 |
| 105-709 | 35-041 | LG 808 |
| 11494 | 92-919 | LG 435 |
| 115-193 | 07-259 | LG 761 |
| 115-200 | 07-261 | LG 761 |
| 115-204 | 07-257 | LG 761 |
| 115-212 | 07-260 | LG 761 |
| 115-220 | 07-258 | LG 761 |
| 115-284 | 07-254 | LG 761 |
| 115-295 | 07-016 | LG 762 |
| 115-315 | 07-154 | LG 761 |
| 115-319 | 07-156 | LG 761 |
| 115-323 | 07-155 | LG 761 |
| 115-323 | 07-255 | LG 761 |
| 115-327 | 07-153 | LG 761 |
| 115-327 | 07-253 | LG 761 |
| 115-331 | 07-157 | LG 761 |
| 115-335 | 07-152 | LG 761 |
| 115-335 | 07-252 | LG 761 |
| 115-339 | 07-150 | LG 761 |
| 115-339 | 07-250 | |
| 115-343 | 07-151 | LG 761 |
| 115-343 | 07-251 | LG 761 |
| 115-943 | 07-450 | LG 761 |
| 11784 | 92-915 | LG 440 |
| 120-006 | 07-102 | LG 774 |
| 120-014 | 07-100 | LG 774 |
| 12003 | 92-912 | LG 436 |
| 120-030 | 07-001 | LG 765 |
| 120-048 | 49-128 | LG 747 |
| 120-071 | 02-860 | LG 766 |
| 120-089 | 02-861 | LG 766 |
| 120-101 | 33-541 | LG 950 |
| 120-113 | 02-040 | LG 765 |
| 120-113 | 02-041 | LG 765 |
| 120-114 | 02-040 | LG 765 |
| 120-122 | 02-041 | LG 765 |
| 120-139 | 02-700 | LG 765 |
| 120-140 | 02-700 | LG 765 |
| 120-158 | 07-063 | LG 775 |
| 120-158 | 07-107 | LG 774 |
| 120-158 | 07-110 | LG 776 |
| 120-174 | 49-079 | LG 768 |
| 120-178 | 49-058 | LG 768 |
| 120-188 | 07-101 | LG 775 |
| 120-196 | 07-390 | LG 766 |
| 120-200 | 49-034 | LG 630 |
| 120-212 | 07-406 | LG 767 |
| 120-224 | 07-408 | LG 766 |
| 120-228 | 07-125 | LG 766 |
| 120-251 | 02-040 | LG 765 |
| 120-253 | 07-404 | LG 766 |
| 120-265 | 83-300 | LG 819 |
| 120-279 | 07-400 | LG 767 |
| 12028 | 92-910 | LG 443 |
| 120-295 | 55-110 | LG 765 |
| 120-327 | 07-393 | LG 765 |
| 120-345 | 83-283 | LG 818 |
| 120-345 | 83-503 | LG 818 |
| 120-360 | 83-301 | LG 816 |
| 120-372 | 83-012 | LG 819 |
| 120-380 | 83-010 | LG 819 |
| 120-380 | 83-400 | LG 819 |
| 120-388 | 55-112 | LG 778 |
| 120-392 | 07-017 | LG 1022 |
| 120-394 | 07-010 | LG 764 |
| 120-410 | 07-112 | LG 774 |
| 120-414 | 07-118 | LG 777 |
| 120-430 | 33-540 | LG 950 |
| 120-434 | 33-542 | LG 950 |
| 120-436 | 07-103 | LG 775 |
| 120-436 | 07-160 | LG 774 |
| 120-450 | 07-124 | LG 776 |
| 120-483 | 83-401 | LG 817 |
| 120-485 | 69-281 | LG 814 |
| 120-485 | 83-013 | LG 817 |
| 120-485 | 83-280 | LG 815 |
| 120-513 | 83-404 | LG 818 |
| 120-523 | 83-284 | LG 818 |
| 120-562 | 07-107 | LG 774 |
| 120-562 | 07-122 | LG 775 |
| 120-566 | 07-122 | LG 775 |
| 120-570 | 07-122 | LG 775 |
| 120-626 | 83-028 | LG 817 |
| 120-634 | 69-282 | LG 817 |
| 120-634 | 83-029 | LG 815 |
| 120-634 | 83-282 | LG 817 |
| 120-634 | 83-285 | LG 814 |
| 120-634 | 83-501 | LG 817 |
| 120-658 | 49-085 | LG 769 |
| 120-678 | 07-104 | LG 776 |
| 120-722 | 83-302 | LG 816 |
| 120-810 | 49-231 | LG 630 |
| 120-818 | 83-011 | LG 819 |
| 120-818 | 83-014 | LG 819 |
| 120-914 | 07-111 | LG 776 |
| 120-970 | 83-403 | LG 818 |
| 120-970 | 83-503 | LG 818 |
| 120-990 | 83-402 | LG 817 |
| 120-990 | 83-501 | LG 817 |
| 125-005 | 07-303 | LG 770 |
| 125-017 | 55-124 | LG 771 |
| 125-033 | 07-315 | LG 772 |
| 125-051 | 07-314 | LG 773 |
| 125-070 | 07-304 | LG 770 |
| 125-078 | 07-307 | LG 770 |
| 125-086 | 07-024 | LG 771 |
| 125-094 | 55-122 | LG 770 |
| 125-096 | 55-120 | LG 770 |
| 125-096 | 55-123 | LG 770 |
| 125-120 | 07-317 | LG 771 |
| 125-157 | 07-013 | LG 773 |
| 125-179 | 07-308 | LG 772 |
| 125-179 | 07-312 | LG 773 |
| 125-195 | 55-109 | LG 773 |
| 125-215 | 55-018 | LG 771 |
| 125-219 | 55-017 | LG 772 |
| 125-237 | 45-118 | LG 760 |
| 125-334 | 49-413 | LG 749 |
| 125-336 | 07-392 | LG 767 |
| 125-364 | 07-319 | LG 771 |
| 125-364 | 55-125 | LG 771 |
| 125-368 | 55-126 | LG 771 |
| 125-381 | 07-309 | LG 772 |
| 125-436 | 07-025 | LG 771 |
| 125-508 | 45-118 | LG 760 |
| 125-560 | 07-600 | LG 770 |
| 125-568 | 07-601 | LG 770 |
| 125-568 | 07-602 | LG 770 |
| 125-660 | 07-304 | LG 770 |
| 125-684 | 50-454 | LG 756 |
| 125-688 | 49-667 | LG 750 |
| 125-692 | 49-196 | LG 756 |
| 125-696 | 50-453 | LG 756 |
| 130-096 | 77-302-1 | LG 864 |
| 130-130 | 77-355-1 | LG 865 |
| 130-138 | 77-304-1 | LG 865 |
| 130-146 | 77-300-1 | LG 864 |
| 130-211 | 77-301-1 | LG 864 |
| 130-211 | 77-313-1 | LG 865 |
| 130-526 | 77-303-1 | LG 865 |
| 130-698 | 77-400-0 | |
| 130-728 | 77-404 | |
| 131-003 | 77-300-1 | LG 864 |
| 131-007 | 77-301-1 | LG 864 |
| 131-011 | 77-302-1 | LG 864 |
| 131-019 | 77-305-1 | LG 865 |
| 131-023 | 77-307-1 | LG 865 |
| 131-027 | 77-309-1 | LG 865 |
| 131-031 | 77-310-1 | LG 865 |
| 131-035 | 77-314-1 | LG 865 |
| 131-039 | 77-312-1 | LG 865 |
| 131-043 | 77-314-1 | LG 865 |
| 131-047 | 77-315-1 | LG 865 |
| 131-051 | 77-319-1 | LG 865 |
| 135-038 | 33-201 | LG 867 |
| 135-053 | 33-208 | LG 866 |
| 135-081 | 33-210 | LG 867 |
| 135-226 | 33-215 | LG 866 |
| 140-020 | 31-900-0 | LG 929 |
| 140-020 | 31-909 | LG 928 |
| 140-042 | 31-004 | LG 929 |
| 140-046 | 31-100 | LG 929 |
| 140-053 | 31-908 | LG 929 |
| 140-061 | 31-904 | LG 930 |
| 140-087 | 31-909 | LG 928 |
| 140-103 | 31-907 | LG 929 |
| 140-129 | 31-914 | LG 930 |
| 140-160 | 31-004 | LG 929 |
| 140-301 | 31-635 | LG 937 |
| 140-377 | 31-912 | LG 929 |
| 14078 | 95-095 | LG 463 |
| 145-608 | 31-642 | LG 937 |
| 145-612 | 31-650 | LG 937 |
| 145-700 | 31-740 | LG 937 |
| 145-704 | 31-742 | LG 937 |
| 145-708 | 31-750 | LG 937 |
| 145-712 | 31-752 | LG 937 |
| 145-716 | 31-760 | LG 937 |
| 146-027 | 31-140 | LG 937 |
| 146-035 | 31-142 | LG 937 |
| 146-043 | 31-150 | LG 937 |
| 146-050 | 31-152 | LG 937 |
| 146-068 | 31-160 | LG 937 |
| 146-084 | 31-232 | LG 937 |
| 146-092 | 31-240 | LG 937 |
| 146-100 | 31-242 | LG 937 |
| 146-118 | 31-250 | LG 937 |
| 146-126 | 31-252 | LG 937 |
| 146-134 | 31-260 | LG 937 |
| 146-159 | 31-540 | LG 937 |
| 146-167 | 31-542 | LG 937 |
| 146-175 | 31-550 | LG 937 |
| 150-003 | 31-051 | LG 924 |
| 150-019 | 43-012 | LG 927 |
| 150-029 | 43-404 | LG 928 |
| 150-045 | 31-050 | LG 924 |
| 150-094 | 43-100 | LG 932 |
| 150-114 | 33-003 | LG 926 |
| 150-118 | 33-005 | LG 927 |
| 150-197 | 33-007 | LG 926 |
| 150-213 | 31-061 | LG 922 |
| 150-254 | 55-800 | LG 934 |
| 150-262 | 55-820 | LG 935 |
| 150-292 | 43-012 | LG 927 |
| 150-298 | 55-813 | LG 933 |
| 150-300 | 55-811 | LG 933 |
| 150-320 | 31-068 | LG 922 |
| 150-411 | 31-065 | LG 922 |
| 150-419 | 31-062 | LG 922 |
| 150-435 | 31-056 | LG 927 |
| 150-443 | 31-918 | LG 922 |
| 150-551 | 31-116 | LG 925 |
| 150-563 | 31-047 | LG 925 |
| 150-575 | 31-117 | LG 925 |
| 150-611 | 31-057 | LG 930 |
| 150-683 | 31-066 | LG 923 |
| 150-703 | 31-052 | LG 923 |
| 150-707 | 31-060 | LG 922 |
| 150-711 | 31-049 | LG 923 |
| 150-991 | 31-041 | LG 932 |
| 150-991 | 43-014 | LG 932 |
| 150-995 | 43-200 | LG 932 |
| 155-002 | 43-400-0 | LG 936 |
| 155-158 | 31-081 | LG 936 |
| 155-244 | 43-509 | LG 936 |
| 155-300 | 43-425 | LG 936 |
| 155-304 | 31-083 | LG 930 |
| 155-304 | 43-426 | LG 936 |
| 155-580 | 43-685 | LG 936 |
| 155-725 | 43-403 | LG 936 |
| 160-010 | 58-132 | LG 960 |
| 160-014 | 58-302 | LG 959 |
| 160-036 | 58-133 | LG 960 |
| 160-081 | 58-397 | LG 958 |
| 160-097 | 58-300 | LG 963 |
| 160-113 | 58-399 | LG 960 |
| 160-127 | 58-150 | LG 960 |
| 160-135 | 58-071 | LG 959 |
| 160-150 | 58-131 | LG 960 |
| 160-166 | 58-398 | LG 959 |
| 160-176 | 58-110 | LG 960 |
| 160-220 | 68-373 | LG 962 |
| 160-224 | 68-374 | LG 962 |
| 160-246 | 58-072 | LG 959 |
| 160-283 | 58-011 | LG 957 |
| 160-291 | 58-001 | LG 961 |

X

## STENS

| PART No. | OREGON | Page |
|---|---|---|
| 160-303 | 58-135 | LG 960 |
| 160-307 | 58-041 | LG 961 |
| 160-309 | 58-040 | LG 961 |
| 160-317 | 58-088 | LG 959 |
| 160-369 | 58-074 | LG 959 |
| 160-405 | 66-203 | LG 962 |
| 160-413 | 66-205 | LG 962 |
| 160-417 | 66-206 | LG 962 |
| 160-421 | 66-207 | LG 962 |
| 160-437 | 68-211 | LG 962 |
| 160-637 | 58-362 | LG 958 |
| 160-801 | 58-114 | LG 960 |
| 160-805 | 58-119 | LG 960 |
| 160-933 | 58-075 | LG 959 |
| 165-013 | 70-379 | LG 963 |
| 165-023 | 70-301 | LG 959 |
| 165-027 | 70-308 | LG 959 |
| 165-031 | 68-214 | LG 962 |
| 165-043 | 70-312 | LG 959 |
| 165-050 | 70-320 | LG 959 |
| 165-054 | 70-375 | LG 958 |
| 165-059 | 70-321 | LG 960 |
| 165-062 | 70-357 | LG 958 |
| 165-066 | 70-340 | LG 959 |
| 165-072 | 70-363 | LG 963 |
| 165-076 | 70-343 | LG 958 |
| 165-080 | 70-335 | LG 959 |
| 165-092 | 70-326 | LG 959 |
| 165-108 | 70-332 | LG 959 |
| 165-116 | 70-315 | LG 960 |
| 165-118 | 70-378 | LG 958 |
| 165-122 | 70-376 | LG 958 |
| 165-130 | 70-314 | LG 959 |
| 165-138 | 70-330 | LG 959 |
| 165-167 | 70-380 | LG 958 |
| 165-191 | 70-356 | LG 958 |
| 165-211 | 70-317 | LG 959 |
| 165-215 | 70-328 | LG 959 |
| 165-223 | 70-339 | LG 959 |
| 165-308 | 70-316 | LG 959 |
| 165-316 | 70-358 | LG 958 |
| 165-332 | 70-334 | LG 959 |
| 165-360 | 70-364 | LG 961 |
| 165-364 | 70-366 | LG 961 |
| 165-368 | 70-365 | LG 961 |
| 165-372 | 70-367 | LG 961 |
| 165-376 | 70-392 | LG 961 |
| 165-380 | 70-368 | LG 961 |
| 165-384 | 70-369 | LG 961 |
| 165-388 | 70-370 | LG 961 |
| 165-392 | 70-371 | LG 961 |
| 165-396 | 70-372 | LG 961 |
| 165-400 | 70-373 | LG 961 |
| 165-560 | 70-351 | LG 959 |
| 165-604 | 70-394 | LG 958 |
| 165-620 | 70-306 | LG 960 |
| 165-628 | 70-311 | LG 960 |
| 170-001 | 71-400 | LG 956 |
| 170-005 | 71-275 | LG 956 |
| 170-019 | 71-500 | |
| 170-027 | 71-511 | LG 956 |
| 170-035 | 71-600 | LG 956 |
| 170-043 | 71-101 | LG 956 |
| 170-043 | 71-404 | |
| 170-050 | 71-102 | LG 956 |
| 170-054 | 71-405 | LG 956 |
| 170-068 | 71-103 | LG 956 |
| 170-068 | 71-800 | LG 956 |
| 170-076 | 71-406 | LG 956 |
| 170-076 | 71-816 | LG 956 |
| 170-084 | 71-004 | LG 956 |
| 170-084 | 71-104 | LG 956 |
| 170-084 | 71-407 | LG 956 |
| 170-100 | 71-003 | LG 956 |
| 170-100 | 71-100 | LG 956 |
| 170-118 | 71-105 | LG 957 |
| 170-126 | 71-283 | LG 957 |
| 170-126 | 71-408 | LG 957 |
| 170-130 | 71-610 | LG 956 |
| 170-138 | 71-276 | LG 956 |
| 170-142 | 71-097 | LG 956 |
| 170-159 | 71-107 | LG 957 |
| 170-167 | 71-108 | LG 957 |
| 170-175 | 71-250 | LG 956 |
| 170-183 | 71-109 | LG 956 |
| 170-183 | 71-401 | LG 956 |
| 170-192 | 71-098 | LG 956 |
| 170-225 | 71-274 | LG 956 |
| 170-225 | 71-402 | LG 956 |
| 172-633 | 72-736 | LG 1045 |
| 175-018 | 72-804 | LG 1047 |
| 175-067 | 72-420 | LG 1047 |
| 175-075 | 72-729 | LG 1044 |
| 175-109 | 72-745 | LG 1033 |
| 175-133 | 72-741 | LG 1046 |
| 175-133 | 72-795 | LG 1044 |
| 175-165 | 72-322 | LG 1041 |
| 175-224 | 72-728 | LG 1044 |
| 175-425 | 70-710 | LG 964 |
| 175-425 | 72-725 | LG 1044 |
| 175-500 | 70-701 | LG 964 |
| 175-500 | 72-796 | LG 1043 |
| 175-505 | 71-001 | LG 957 |
| 175-506 | 72-722 | LG 1045 |
| 175-510 | 72-737 | LG 1045 |
| 175-513 | 71-002 | LG 957 |
| 175-515 | 72-723 | LG 1043 |
| 175-520 | 70-706 | LG 964 |
| 175-613 | 72-749 | LG 1046 |
| 175-617 | 72-756 | LG 1046 |
| 175-629 | 72-735 | LG 1045 |
| 180-100 | 67-012 | LG 965 |
| 180-104 | 67-009 | LG 965 |
| 180-104 | 67-020 | LG 965 |
| 180-108 | 67-010 | LG 965 |
| 180-112 | 67-013 | LG 965 |
| 180-116 | 67-001 | LG 965 |
| 180-120 | 67-005 | LG 965 |
| 180-124 | 67-018 | LG 965 |
| 180-128 | 67-017 | LG 965 |
| 180-132 | 67-014 | LG 965 |
| 180-136 | 67-015 | LG 965 |
| 180-376 | 67-011 | LG 965 |
| 180-428 | 67-008 | LG 965 |
| 180-432 | 67-007 | LG 965 |
| 185-009 | 72-427 | LG 1029 |
| 185-025 | 72-437 | LG 1030 |
| 185-033 | 72-410 | LG 1030 |
| 195-008 | 72-106 | LG 1029 |
| 195-016 | 72-107 | LG 1029 |
| 195-016 | 72-430 | LG 1034 |
| 195-025 | 72-108 | LG 1031 |
| 200-014 | 72-449 | LG 1030 |
| 205-039 | 72-510 | LG 1036 |
| 205-047 | 72-450 | LG 1037 |
| 205-088 | 72-436 | LG 1034 |
| 205-104 | 72-109 | LG 1037 |
| 205-112 | 72-746 | LG 1032 |
| 205-120 | 72-747 | LG 1036 |
| 205-211 | 72-500 | LG 1034 |
| 205-229 | 72-508 | LG 1034 |
| 205-370 | 72-456 | LG 1036 |
| 205-374 | 72-458 | LG 1031 |
| 205-390 | 72-003 | LG 1031 |
| 205-402 | 72-001 | LG 1031 |
| 205-512 | 72-024 | LG 1035 |
| 210-013 | 72-316 | LG 1042 |
| 210-033 | 72-758 | LG 1042 |
| 210-037 | 72-020 | LG 1039 |
| 210-043 | 72-021 | LG 1040 |
| 210-047 | 72-306 | LG 1038 |
| 210-051 | 72-119 | LG 1040 |
| 210-054 | 72-307 | LG 1038 |
| 210-108 | 72-323 | LG 1041 |
| 210-124 | 72-100 | |
| 210-124 | 72-304 | LG 1038 |
| 210-132 | 72-161 | LG 1038 |
| 210-142 | 72-135 | LG 1040 |
| 210-146 | 72-309 | LG 1042 |
| 210-165 | 72-311-1 | LG 1039 |
| 210-169 | 72-051 | LG 1039 |
| 210-179 | 72-318 | LG 1042 |
| 210-199 | 72-027 | LG 1039 |
| 210-203 | 72-025 | LG 1039 |
| 210-203 | 72-094 | LG 1042 |
| 210-203 | 72-165 | LG 1041 |
| 210-203 | 72-308-1 | LG 1042 |
| 210-220 | 72-162 | LG 1038 |
| 210-247 | 72-099 | LG 1040 |
| 210-259 | 72-098 | LG 1040 |
| 210-263 | 72-129 | LG 1041 |
| 210-275 | 72-015 | LG 1039 |
| 210-303 | 72-131 | LG 1041 |
| 210-443 | 72-134 | LG 1040 |
| 210-451 | 72-133 | LG 1040 |
| 210-455 | 72-164 | LG 1040 |
| 215-012 | 45-112 | LG 241 |
| 215-020 | 45-012 | LG 224 |
| 215-038 | 45-058 | LG 232 |
| 215-046 | 45-034 | LG 224 |
| 215-061 | 45-258 | LG 224 |
| 215-079 | 45-234 | LG 224 |
| 215-087 | 45-206 | LG 231 |
| 215-095 | 45-205 | LG 228 |
| 215-145 | 45-079 | LG 249 |
| 215-160 | 45-080 | LG 249 |
| 215-202 | 45-260 | LG 224 |
| 215-210 | 45-000 | LG 237 |
| 215-211 | 45-000 | LG 237 |
| 215-305 | 45-023 | LG 249 |
| 215-370 | 45-047 | LG 241 |
| 215-370 | 45-258 | LG 224 |
| 215-557 | 45-003 | LG 244 |
| 215-565 | 45-098 | LG 243 |
| 225-029 | 45-043 | LG 243 |
| 225-029 | 45-057 | LG 249 |
| 225-086 | 45-087 | LG 243 |
| 225-128 | 45-088 | LG 240 |
| 225-144 | 45-092 | LG 854 |
| 225-205 | 48-007 | LG 1039 |
| 225-217 | 45-225 | LG 232 |
| 225-235 | 45-082 | LG 854 |
| 225-268 | 45-620 | LG 225 |
| 225-276 | 45-019 | LG 239 |
| 225-449 | 45-037 | LG 242 |
| 225-482 | 45-009 | LG 853 |
| 225-532 | 45-100 | LG 239 |
| 225-714 | 48-320 | LG 238 |
| 225-722 | 45-030 | LG 245 |
| 225-722 | 45-127 | LG 244 |
| 225-746 | 45-046 | LG 241 |
| 225-750 | 45-095 | LG 855 |
| 225-754 | 45-072 | LG 242 |
| 225-837 | 45-831 | LG 234 |
| 225-839 | 45-006 | LG 249 |
| 225-854 | 45-007 | LG 853 |
| 225-862 | 45-013 | LG 853 |
| 225-987 | 15-107 | LG 273 |
| 225-987 | 45-107 | LG 245 |
| 230-003 | 45-242 | LG 243 |
| 230-011 | 45-243 | LG 243 |
| 230-015 | 45-243 | LG 243 |
| 230-019 | 45-242 | LG 243 |
| 230-029 | 45-259 | LG 224 |
| 230-033 | 45-295 | LG 232 |
| 230-041 | 45-207 | LG 236 |
| 230-052 | 45-256 | LG 224 |
| 230-056 | 48-211 | LG 233 |
| 230-060 | 45-257 | LG 245 |
| 230-086 | 45-220 | LG 232 |
| 230-090 | 45-220 | LG 232 |
| 230-102 | 45-025 | LG 247 |
| 230-102 | 45-227 | LG 234 |
| 230-106 | 45-209 | LG 246 |
| 230-128 | 45-010 | LG 238 |
| 230-144 | 45-208 | LG 245 |
| 230-160 | 45-295 | LG 232 |
| 230-221 | 45-269 | LG 227 |
| 230-237 | 45-031 | LG 232 |
| 230-237 | 45-063 | LG 230 |
| 230-276 | 45-267 | LG 235 |
| 230-283 | 45-270 | LG 227 |
| 230-287 | 45-268 | LG 227 |
| 230-300 | 45-035 | LG 226 |
| 230-404 | 45-130 | LG 232 |
| 230-437 | 45-404 | LG 234 |
| 230-605 | 45-264 | LG 224 |
| 230-665 | 45-121 | LG 230 |
| 230-669 | 45-060 | LG 234 |
| 238-020 | 75-320 | LG 334 |
| 238-021 | 75-321 | LG 334 |
| 238-022 | 75-322 | LG 334 |
| 238-023 | 75-323 | LG 334 |
| 238-024 | 75-324 | LG 334 |

# 2019 Aftermarket X-Reference

## STENS

| PART No. | OREGON | Page |
|---|---|---|
| 238-025 | 75-325 | LG 334 |
| 238-026 | 15-267 | LG 268 |
| 238-026 | 75-326 | LG 334 |
| 238-027 | 75-327 | LG 334 |
| 238-028 | 75-328 | LG 334 |
| 238-029 | 75-329 | LG 334 |
| 238-030 | 75-330 | LG 334 |
| 238-031 | 75-331 | LG 334 |
| 238-032 | 75-332 | LG 334 |
| 238-033 | 15-193 | LG 266 |
| 238-033 | 75-333 | LG 334 |
| 238-034 | 75-334 | LG 334 |
| 238-035 | 15-716 | LG 315 |
| 238-035 | 75-335 | LG 334 |
| 238-036 | 15-195 | LG 265 |
| 238-036 | 15-268 | LG 268 |
| 238-036 | 75-336 | LG 334 |
| 238-037 | 75-337 | LG 334 |
| 238-038 | 75-338 | LG 334 |
| 238-039 | 75-339 | LG 334 |
| 238-040 | 75-340 | LG 334 |
| 238-041 | 75-341 | LG 334 |
| 238-042 | 75-342 | LG 334 |
| 238-043 | 75-343 | LG 334 |
| 238-044 | 75-344 | LG 334 |
| 238-045 | 75-345 | LG 334 |
| 238-046 | 75-346 | LG 334 |
| 238-048 | 75-348 | LG 334 |
| 238-049 | 75-349 | LG 334 |
| 238-050 | 75-350 | LG 334 |
| 240-048 | 41-005 | LG 728 |
| 240-068 | 76-070-0 | LG 726 |
| 240-275 | 51-001-0 | LG 727 |
| 240-325 | 76-002 | LG 726 |
| 240-366 | 76-110 | LG 726 |
| 240-394 | 76-067-0 | LG 726 |
| 240-416 | 48-080 | |
| 240-440 | 51-000 | LG 727 |
| 240-452 | 82-100 | LG 802 |
| 240-507 | 49-050 | LG 954 |
| 240-630 | 81-101 | |
| 240-648 | 81-102 | LG 805 |
| 240-671 | 51-222 | LG 727 |
| 240-680 | 51-013 | LG 725 |
| 240-709 | 51-223 | LG 726 |
| 240-804 | 49-051 | LG 954 |
| 240-860 | 48-148 | LG 695 |
| 240-975 | 76-014 | LG 726 |
| 241-076 | 48-232 | LG 724 |
| 241-200 | 48-236 | LG 724 |
| 245-005 | 45-117 | LG 938 |
| 245-013 | 45-132 | LG 939 |
| 245-019 | 45-103 | LG 938 |
| 245-027 | 45-104 | LG 939 |
| 245-027 | 45-111 | LG 939 |
| 245-043 | 45-114 | LG 938 |
| 245-050 | 45-301 | LG 804 |
| 245-054 | 45-303 | LG 804 |
| 245-068 | 45-302 | LG 804 |
| 245-076 | 45-305 | LG 804 |
| 245-084 | 45-306 | LG 804 |
| 248-018 | 75-418 | LG 334 |
| 248-019 | 75-419 | LG 334 |
| 248-020 | 75-420 | LG 334 |
| 248-021 | 75-421 | LG 334 |
| 248-022 | 75-422 | LG 334 |
| 248-023 | 75-423 | LG 334 |
| 248-024 | 75-424 | LG 334 |
| 248-025 | 75-425 | LG 334 |
| 248-026 | 75-426 | LG 334 |
| 248-027 | 75-427 | LG 334 |
| 248-028 | 75-010 | LG 311 |
| 248-028 | 75-428 | LG 334 |
| 248-029 | 75-429 | LG 334 |
| 248-031 | 15-645 | LG 306 |
| 248-031 | 75-431 | LG 334 |
| 248-032 | 75-432 | LG 334 |
| 248-033 | 75-433 | LG 334 |
| 248-034 | 15-443 | LG 284 |
| 248-034 | 15-649 | LG 309 |
| 248-034 | 75-434 | LG 334 |
| 248-035 | 15-646 | LG 306 |
| 248-035 | 75-435 | LG 334 |
| 248-036 | 75-436 | LG 334 |
| 248-037 | 75-437 | LG 334 |
| 248-038 | 75-438 | LG 334 |
| 248-039 | 15-194 | LG 265 |
| 248-039 | 75-439 | LG 334 |
| 248-040 | 75-440 | LG 334 |
| 248-041 | 15-719 | LG 312 |
| 248-041 | 75-441 | LG 334 |
| 248-041 | 75-890 | LG 289 |
| 248-042 | 75-442 | LG 334 |
| 248-043 | 75-443 | LG 334 |
| 248-044 | 75-444 | LG 334 |
| 248-045 | 75-445 | LG 334 |
| 248-046 | 15-280 | LG 270 |
| 248-046 | 75-446 | LG 334 |
| 248-047 | 75-447 | LG 334 |
| 248-048 | 15-801 | LG 321 |
| 248-048 | 75-448 | LG 334 |
| 248-049 | 75-449 | LG 334 |
| 248-050 | 75-223 | LG 269 |
| 248-050 | 75-450 | LG 334 |
| 248-051 | 15-947 | LG 328 |
| 248-051 | 75-451 | LG 334 |
| 248-052 | 75-452 | LG 334 |
| 248-052 | 75-889 | LG 252 |
| 248-053 | 75-453 | LG 334 |
| 248-054 | 75-454 | LG 334 |
| 248-055 | 75-455 | LG 334 |
| 248-056 | 75-456 | LG 334 |
| 248-057 | 15-601 | LG 274 |
| 248-057 | 75-457 | LG 334 |
| 248-058 | 75-458 | LG 334 |
| 248-059 | 15-485 | LG 293 |
| 248-059 | 75-459 | LG 334 |
| 248-060 | 15-499 | LG 294 |
| 248-060 | 75-460 | LG 334 |
| 248-060 | 75-974 | LG 294 |
| 248-061 | 75-461 | LG 334 |
| 248-062 | 75-462 | LG 334 |
| 248-063 | 15-657 | LG 259 |
| 248-063 | 75-463 | LG 334 |
| 248-064 | 75-464 | LG 334 |
| 248-065 | 75-465 | LG 334 |
| 248-066 | 75-466 | LG 334 |
| 248-067 | 75-467 | LG 334 |
| 248-068 | 75-468 | LG 334 |
| 248-069 | 75-469 | LG 335 |
| 248-070 | 75-470 | LG 335 |
| 248-071 | 75-471 | LG 335 |
| 248-072 | 15-735 | LG 316 |
| 248-072 | 75-472 | LG 335 |
| 248-073 | 75-473 | LG 335 |
| 248-074 | 75-474 | LG 335 |
| 248-075 | 75-475 | LG 335 |
| 248-076 | 75-476 | LG 335 |
| 248-077 | 75-477 | LG 335 |
| 248-078 | 15-625 | LG 275 |
| 248-078 | 75-478 | LG 335 |
| 248-079 | 15-729 | LG 316 |
| 248-079 | 75-479 | LG 335 |
| 248-080 | 15-695 | LG 260 |
| 248-080 | 75-480 | LG 335 |
| 248-081 | 75-481 | LG 335 |
| 248-082 | 75-482 | LG 335 |
| 248-083 | 75-483 | LG 335 |
| 248-084 | 75-484 | LG 335 |
| 248-085 | 75-485 | LG 335 |
| 248-086 | 75-486 | LG 335 |
| 248-087 | 75-487 | LG 335 |
| 248-087 | 75-934 | LG 310 |
| 248-088 | 75-488 | LG 335 |
| 248-089 | 15-660 | LG 309 |
| 248-089 | 75-489 | LG 335 |
| 248-090 | 15-634 | LG 307 |
| 248-090 | 15-733 | LG 316 |
| 248-090 | 75-490 | LG 335 |
| 248-091 | 15-732 | LG 316 |
| 248-091 | 75-491 | LG 335 |
| 248-092 | 15-691 | LG 260 |
| 248-092 | 75-492 | LG 335 |
| 248-093 | 15-724 | LG 316 |
| 248-093 | 75-493 | LG 335 |
| 248-094 | 75-494 | LG 335 |
| 248-095 | 75-495 | LG 335 |
| 248-096 | 75-496 | LG 335 |
| 248-097 | 15-815 | LG 321 |
| 248-097 | 75-497 | LG 335 |
| 248-098 | 75-498 | LG 335 |
| 248-099 | 75-499 | LG 335 |
| 248-100 | 15-593 | LG 301 |
| 248-100 | 75-400 | LG 335 |
| 248-101 | 75-401 | LG 335 |
| 248-102 | 15-788 | LG 320 |
| 248-102 | 75-402 | LG 335 |
| 248-102 | 75-975 | LG 294 |
| 248-103 | 75-403 | LG 256 |
| 248-104 | 75-404 | LG 335 |
| 248-105 | 15-192 | LG 265 |
| 248-105 | 15-589 | LG 273 |
| 248-105 | 75-405 | LG 335 |
| 248-106 | 75-406 | LG 335 |
| 248-107 | 15-629 | LG 304 |
| 248-107 | 75-407 | LG 335 |
| 248-108 | 15-654 | LG 309 |
| 248-108 | 75-408 | LG 335 |
| 248-109 | 75-409 | LG 335 |
| 248-110 | 75-410 | LG 335 |
| 248-111 | 75-411 | LG 335 |
| 248-112 | 75-412 | LG 335 |
| 248-113 | 75-413 | LG 335 |
| 248-114 | 15-829 | LG 324 |
| 248-114 | 75-414 | LG 335 |
| 248-117 | 75-417 | LG 335 |
| 250-001 | 32-101 | LG 676 |
| 250-005 | 32-100 | LG 676 |
| 250-019 | 32-105 | LG 676 |
| 250-027 | 32-107 | LG 676 |
| 250-050 | 32-116 | LG 676 |
| 250-081 | 02-187 | LG 676 |
| 250-084 | 02-188 | LG 676 |
| 250-085 | 02-188 | LG 676 |
| 250-092 | 02-190 | LG 676 |
| 250-093 | 02-190 | LG 676 |
| 250-100 | 02-191 | LG 676 |
| 250-101 | 02-191 | LG 676 |
| 250-126 | 02-195 | LG 676 |
| 250-127 | 02-195 | LG 676 |
| 250-134 | 02-196 | LG 676 |
| 250-135 | 02-196 | LG 676 |
| 250-139 | 02-175 | LG 676 |
| 250-142 | 02-176 | LG 676 |
| 250-143 | 02-176 | LG 676 |
| 250-159 | 02-177 | LG 676 |
| 250-160 | 02-177 | LG 676 |
| 250-167 | 02-178 | LG 676 |
| 250-168 | 02-178 | LG 676 |
| 250-183 | 02-182 | LG 676 |
| 250-184 | 02-182 | LG 676 |
| 250-191 | 02-184 | LG 676 |
| 250-192 | 02-184 | LG 676 |
| 250-223 | 32-110 | LG 676 |
| 250-228 | 02-181 | LG 676 |
| 250-232 | 02-193 | LG 676 |
| 250-266 | 32-103 | LG 676 |
| 250-274 | 32-108 | LG 676 |
| 255-109 | 84-011 | LG 675 |
| 255-117 | 84-007 | LG 675 |
| 255-125 | 84-004 | LG 675 |
| 255-133 | 84-001 | LG 675 |
| 255-190 | 45-634 | LG 675 |
| 255-285 | 33-133 | LG 736 |
| 255-289 | 33-134 | LG 736 |
| 255-297 | 33-104 | LG 735 |
| 255-299 | 84-027 | LG 675 |
| 255-307 | 84-009 | LG 675 |
| 255-315 | 84-006 | LG 675 |
| 255-319 | 33-117 | LG 733 |
| 255-323 | 33-118-1 | LG 733 |
| 255-331 | 33-119-1 | LG 734 |
| 255-335 | 33-121 | LG 734 |
| 255-351 | 33-110 | LG 735 |
| 255-363 | 33-122-1 | LG 734 |
| 255-375 | 33-184 | LG 737 |
| 255-387 | 33-114 | LG 734 |
| 255-407 | 75-368 | LG 309 |
| 255-415 | 33-183 | LG 735 |
| 255-423 | 33-116 | LG 735 |
| 255-431 | 33-124 | LG 736 |
| 255-435 | 33-127 | LG 737 |
| 255-435 | 33-185 | LG 737 |
| 255-455 | 33-132 | LG 735 |

## STENS

| PART No. | OREGON | Page |
|---|---|---|
| 255-475 | 33-139 | LG 736 |
| 255-487 | 33-187 | LG 738 |
| 255-488 | 33-157 | LG 738 |
| 255-491 | 33-154 | LG 741 |
| 255-511 | 33-112 | LG 735 |
| 255-515 | 33-111 | LG 735 |
| 255-519 | 33-113 | LG 740 |
| 255-535 | 33-115 | LG 738 |
| 255-539 | 33-125-1 | LG 736 |
| 255-543 | 33-126-1 | LG 736 |
| 255-547 | 33-128-1 | LG 741 |
| 255-552 | 33-136 | LG 737 |
| 255-555 | 33-135 | LG 737 |
| 255-560 | 33-137 | LG 737 |
| 255-560 | 33-153 | LG 737 |
| 255-560 | 33-156 | LG 738 |
| 255-627 | 33-120 | LG 734 |
| 255-627 | 33-138 | LG 738 |
| 255-642 | 33-155 | LG 738 |
| 255-659 | 33-188 | LG 738 |
| 255-887 | 33-190 | LG 741 |
| 258-027 | 75-527 | LG 334 |
| 258-028 | 75-528 | LG 334 |
| 258-029 | 75-529 | LG 334 |
| 258-030 | 75-530 | LG 334 |
| 258-031 | 75-531 | LG 334 |
| 258-032 | 75-532 | LG 334 |
| 258-033 | 75-533 | LG 334 |
| 258-034 | 75-534 | LG 334 |
| 258-035 | 75-535 | LG 334 |
| 258-036 | 75-536 | LG 334 |
| 258-037 | 75-537 | LG 334 |
| 258-038 | 75-538 | LG 334 |
| 258-039 | 75-539 | LG 334 |
| 258-040 | 75-540 | LG 334 |
| 258-041 | 75-541 | LG 334 |
| 258-042 | 75-542 | LG 334 |
| 258-043 | 75-543 | LG 334 |
| 258-044 | 75-544 | LG 334 |
| 258-045 | 75-545 | LG 334 |
| 258-046 | 75-546 | LG 334 |
| 258-047 | 75-547 | LG 334 |
| 258-048 | 75-548 | LG 334 |
| 258-049 | 75-549 | LG 334 |
| 258-050 | 15-682 | LG 313 |
| 258-050 | 75-550 | LG 334 |
| 258-051 | 75-551 | LG 334 |
| 258-052 | 15-409 | LG 280 |
| 258-052 | 75-552 | LG 334 |
| 258-053 | 75-553 | LG 334 |
| 258-054 | 75-554 | LG 334 |
| 258-055 | 75-555 | LG 334 |
| 258-056 | 75-556 | LG 334 |
| 258-057 | 75-557 | LG 334 |
| 258-058 | 75-558 | LG 253 |
| 258-059 | 15-595 | LG 274 |
| 258-059 | 75-559 | LG 334 |
| 258-060 | 75-560 | LG 334 |
| 258-061 | 75-561 | LG 334 |
| 258-062 | 75-562 | LG 334 |
| 258-063 | 15-274 | LG 270 |
| 258-063 | 15-277 | LG 270 |
| 258-063 | 75-563 | LG 253 |
| 258-064 | 15-921 | LG 329 |
| 258-064 | 75-564 | LG 334 |
| 258-065 | 15-445 | LG 284 |
| 258-065 | 75-565 | LG 253 |
| 258-066 | 75-566 | LG 334 |
| 258-067 | 75-567 | LG 334 |
| 258-068 | 75-568 | LG 334 |
| 258-069 | 15-190 | LG 265 |
| 258-069 | 75-569 | LG 335 |
| 258-070 | 75-570 | LG 335 |
| 258-071 | 15-804 | LG 321 |
| 258-071 | 75-571 | LG 335 |
| 258-072 | 15-799 | LG 320 |
| 258-072 | 75-572 | LG 335 |
| 258-073 | 75-573 | LG 335 |
| 258-074 | 15-650 | LG 259 |
| 258-074 | 75-574 | LG 335 |
| 258-075 | 75-575 | LG 335 |
| 258-076 | 75-576 | LG 335 |
| 258-077 | 75-577 | LG 335 |
| 258-078 | 75-578 | LG 335 |
| 258-079 | 75-579 | LG 335 |
| 258-080 | 75-580 | LG 335 |
| 258-081 | 15-922 | LG 329 |
| 258-081 | 75-581 | LG 335 |
| 258-082 | 75-582 | LG 254 |
| 258-083 | 15-652 | LG 259 |
| 258-083 | 75-583 | LG 335 |
| 258-084 | 15-659 | LG 309 |
| 258-084 | 75-584 | LG 335 |
| 258-085 | 75-585 | LG 335 |
| 258-086 | 75-586 | LG 335 |
| 258-087 | 75-587 | LG 335 |
| 258-088 | 75-588 | LG 335 |
| 258-089 | 75-589 | LG 335 |
| 258-090 | 75-590 | LG 335 |
| 258-091 | 15-920 | LG 329 |
| 258-091 | 75-591 | LG 335 |
| 258-092 | 15-588 | LG 275 |
| 258-092 | 75-592 | LG 335 |
| 258-093 | 75-593 | LG 335 |
| 258-094 | 15-408 | LG 279 |
| 258-094 | 75-594 | LG 335 |
| 258-095 | 75-595 | LG 335 |
| 258-096 | 75-596 | LG 335 |
| 258-097 | 75-597 | LG 335 |
| 258-097 | 75-977 | LG 310 |
| 258-098 | 75-598 | LG 335 |
| 258-099 | 75-599 | LG 335 |
| 258-100 | 75-500 | LG 335 |
| 258-103 | 75-503 | LG 256 |
| 258-114 | 15-242 | LG 267 |
| 260-000 | 80-036 | LG 727 |
| 260-018 | 80-014 | LG 727 |
| 260-042 | 48-048 | LG 725 |
| 260-059 | 48-049 | LG 725 |
| 260-075 | 48-051 | LG 725 |
| 260-133 | 48-043 | |
| 260-166 | 60-048 | LG 722 |
| 260-170 | 60-065 | LG 722 |
| 260-174 | 60-060 | LG 722 |
| 260-182 | 60-092 | LG 722 |
| 260-224 | 46-200 | LG 722 |
| 260-232 | 46-200 | LG 722 |
| 265-007 | 75-681 | LG 313 |
| 265-012 | 75-724 | LG 310 |
| 265-013 | 75-091 | LG 302 |
| 265-014 | 75-246 | LG 295 |
| 265-017 | 75-040 | LG 306 |
| 265-018 | 75-114 | LG 281 |
| 265-020 | 75-264 | LG 304 |
| 265-022 | 75-266 | LG 254 |
| 265-024 | 75-964 | LG 309 |
| 265-025 | 15-630 | LG 306 |
| 265-025 | 75-005 | LG 307 |
| 265-026 | 75-209 | LG 308 |
| 265-027 | 15-685 | LG 315 |
| 265-027 | 75-210 | LG 309 |
| 265-028 | 15-686 | LG 315 |
| 265-028 | 75-267 | LG 309 |
| 265-029 | 15-961 | LG 297 |
| 265-030 | 75-129 | LG 255 |
| 265-031 | 75-135 | LG 308 |
| 265-033 | 75-112 | LG 306 |
| 265-042 | 15-870 | LG 326 |
| 265-042 | 75-167 | LG 289 |
| 265-043 | 15-055 | LG 331 |
| 265-047 | 115-029 | LG 255 |
| 265-047 | 15-029 | LG 291 |
| 265-048 | 75-898 | LG 262 |
| 265-049 | 75-936 | LG 290 |
| 265-050 | 75-042 | LG 308 |
| 265-051 | 15-641 | LG 308 |
| 265-053 | 75-107 | LG 254 |
| 265-053 | 75-360 | LG 294 |
| 265-056 | 75-161 | LG 255 |
| 265-057 | 75-171 | LG 289 |
| 265-057 | 75-892 | LG 255 |
| 265-059 | 75-161 | LG 255 |
| 265-060 | 115-204 | LG 282 |
| 265-064 | 15-020 | LG 291 |
| 265-065 | 75-024 | LG 302 |
| 265-067 | 75-170 | LG 290 |
| 265-069 | 75-000 | LG 262 |
| 265-071 | 75-196 | LG 290 |
| 265-073 | 75-195 | LG 254 |
| 265-074 | 75-029 | LG 253 |
| 265-078 | 75-887 | LG 323 |
| 265-079 | 15-401 | LG 279 |
| 265-083 | 75-816 | LG 257 |
| 265-084 | 15-590 | LG 300 |
| 265-087 | 15-457 | LG 287 |
| 265-088 | 75-670 | LG 288 |
| 265-089 | 75-671 | LG 287 |
| 265-090 | 75-281 | LG 301 |
| 265-092 | 75-099 | LG 262 |
| 265-095 | 75-243 | LG 288 |
| 265-096 | 15-051 | LG 250 |
| 265-097 | 75-984 | LG 257 |
| 265-098 | 75-242 | LG 288 |
| 265-099 | 75-295 | LG 295 |
| 265-100 | 75-824 | LG 274 |
| 265-101 | 75-995 | LG 303 |
| 265-102 | 15-455 | LG 287 |
| 265-103 | 75-362 | LG 256 |
| 265-105 | 75-364 | LG 304 |
| 265-106 | 15-022 | LG 292 |
| 265-107 | 75-380 | LG 324 |
| 265-108 | 75-002 | LG 301 |
| 265-109 | 75-278 | LG 324 |
| 265-110 | 15-483 | LG 293 |
| 265-111 | 15-321 | LG 272 |
| 265-113 | 75-378 | LG 324 |
| 265-114 | 75-277 | LG 324 |
| 265-116 | 75-028 | LG 302 |
| 265-117 | 15-046 | LG 314 |
| 265-124 | 15-839 | LG 324 |
| 265-124 | 75-136 | LG 309 |
| 265-129 | 75-208 | LG 277 |
| 265-131 | 75-199 | LG 254 |
| 265-134 | 75-186 | LG 281 |
| 265-135 | 75-960 | LG 257 |
| 265-136 | 75-097 | LG 289 |
| 265-137 | 75-188 | LG 256 |
| 265-138 | 75-967 | LG 258 |
| 265-141 | 75-234 | LG 281 |
| 265-142 | 75-215 | LG 313 |
| 265-145 | 75-270 | LG 257 |
| 265-146 | 75-216 | LG 257 |
| 265-147 | 75-268 | LG 313 |
| 265-152 | 75-106 | LG 261 |
| 265-153 | 75-263 | LG 304 |
| 265-154 | 75-273 | LG 320 |
| 265-155 | 15-037 | LG 295 |
| 265-156 | 75-685 | LG 324 |
| 265-157 | 15-826 | LG 321 |
| 265-158 | 15-827 | LG 322 |
| 265-159 | 15-828 | LG 322 |
| 265-160 | 75-686 | LG 324 |
| 265-162 | 15-115 | LG 282 |
| 265-164 | 15-117 | LG 283 |
| 265-167 | 75-682 | LG 258 |
| 265-168 | 75-629 | LG 314 |
| 265-170 | 15-116 | LG 283 |
| 265-172 | 75-676 | LG 304 |
| 265-173 | 75-221 | LG 280 |
| 265-174 | 75-993 | LG 303 |
| 265-177 | 75-648 | LG 257 |
| 265-179 | 75-649 | LG 258 |
| 265-181 | 15-009 | LG 296 |
| 265-182 | 115-220 | LG 264 |
| 265-183 | 15-399 | LG 282 |
| 265-186 | 75-979 | LG 255 |
| 265-187 | 75-709 | LG 305 |
| 265-188 | 75-164 | LG 262 |
| 265-189 | 75-631 | LG 314 |
| 265-189 | 75-943 | LG 283 |
| 265-190 | 75-961 | LG 281 |
| 265-191 | 75-917 | LG 282 |
| 265-194 | 15-025 | LG 255 |
| 265-195 | 75-714 | LG 276 |
| 265-196 | 75-814 | LG 276 |
| 265-198 | 75-673 | LG 305 |
| 265-199 | 75-073 | LG 319 |
| 265-200 | 15-002 | LG 311 |
| 265-201 | 75-813 | LG 276 |
| 265-204 | 75-025 | LG 253 |
| 265-206 | 75-677 | LG 304 |
| 265-208 | 75-169 | LG 290 |
| 265-211 | 75-886 | LG 276 |
| 265-213 | 15-613 | LG 305 |

# 2019 Aftermarket X-Reference

## STENS

| PART No. | OREGON | Page |
|---|---|---|
| 265-214 | 15-021 | LG 256 |
| 265-214 | 75-895 | LG 263 |
| 265-215 | 75-260 | LG 312 |
| 265-216 | 15-027 | LG 306 |
| 265-217 | 75-810 | LG 257 |
| 265-218 | 75-893 | LG 263 |
| 265-219 | 15-028 | LG 277 |
| 265-220 | 75-894 | LG 263 |
| 265-222 | 15-026 | LG 277 |
| 265-223 | 75-815 | LG 277 |
| 265-226 | 75-600 | LG 276 |
| 265-227 | 115-145 | LG 323 |
| 265-228 | 75-823 | LG 254 |
| 265-230 | 75-710 | LG 257 |
| 265-234 | 15-623 | LG 274 |
| 265-235 | 75-716 | LG 276 |
| 265-237 | 75-806 | LG 293 |
| 265-237 | 75-978 | LG 293 |
| 265-238 | 75-800 | LG 257 |
| 265-239 | 75-703 | LG 295 |
| 265-241 | 75-297 | LG 295 |
| 265-242 | 75-300 | LG 295 |
| 265-243 | 75-240 | LG 297 |
| 265-244 | 75-802 | LG 296 |
| 265-245 | 15-604 | LG 275 |
| 265-246 | 75-706 | LG 256 |
| 265-247 | 75-072 | LG 268 |
| 265-249 | 115-219 | LG 305 |
| 265-252 | 75-249 | LG 305 |
| 265-255 | 75-163 | LG 261 |
| 265-256 | 75-157 | LG 251 |
| 265-257 | 75-675 | LG 303 |
| 265-258 | 75-363 | LG 304 |
| 265-263 | 75-108 | LG 289 |
| 265-264 | 75-994 | LG 304 |
| 265-265 | 75-065 | LG 307 |
| 265-272 | 75-068 | LG 318 |
| 265-273 | 75-684 | LG 322 |
| 265-275 | 115-146 | LG 256 |
| 265-276 | 75-935 | LG 255 |
| 265-280 | 75-194 | LG 289 |
| 265-286 | 75-101 | LG 269 |
| 265-293 | 15-138 | LG 323 |
| 265-302 | 75-799 | LG 293 |
| 265-303 | 15-498 | LG 294 |
| 265-304 | 15-963 | LG 297 |
| 265-306 | 75-061 | LG 307 |
| 265-307 | 15-492 | LG 294 |
| 265-308 | 15-490 | LG 294 |
| 265-309 | 15-491 | LG 294 |
| 265-313 | 15-497 | LG 294 |
| 265-314 | 75-122 | LG 307 |
| 265-316 | 75-803 | LG 258 |
| 265-320 | 15-123 | LG 284 |
| 265-322 | 75-041 | LG 255 |
| 265-332 | 15-124 | LG 284 |
| 265-348 | 75-043 | LG 312 |
| 265-348 | 75-956 | LG 278 |
| 265-349 | 75-669 | LG 284 |
| 265-350 | 15-142 | LG 323 |
| 265-357 | 15-603 | LG 304 |
| 265-361 | 15-230 | LG 260 |
| 265-363 | 75-353 | LG 319 |
| 265-375 | 75-044 | LG 313 |
| 265-376 | 15-135 | LG 314 |
| 265-379 | 15-010 | LG 296 |
| 265-384 | 75-204 | LG 309 |
| 265-387 | 75-055 | LG 255 |
| 265-401 | 75-052 | LG 313 |
| 265-404 | 15-122 | LG 284 |
| 265-413 | 75-075 | LG 322 |
| 265-415 | 15-110 | LG 273 |
| 265-417 | 75-094 | LG 252 |
| 265-418 | 15-005 | LG 282 |
| 265-421 | 75-508 | LG 319 |
| 265-425 | 75-027 | LG 302 |
| 265-430 | 15-128 | LG 284 |
| 265-433 | 75-148 | LG 300 |
| 265-437 | 75-727 | LG 319 |
| 265-451 | 15-410 | LG 280 |
| 265-454 | 15-139 | LG 323 |
| 265-458 | 75-177 | LG 281 |
| 265-459 | 15-404 | LG 279 |
| 265-460 | 15-405 | LG 279 |
| 265-462 | 15-130 | LG 296 |
| 265-466 | 75-275 | LG 322 |
| 265-467 | 15-143 | LG 323 |
| 265-470 | 75-354 | LG 319 |
| 265-474 | 75-205 | LG 322 |
| 265-478 | 75-066 | LG 251 |
| 265-488 | 75-045 | LG 307 |
| 265-492 | 75-113 | LG 281 |
| 265-494 | 75-152 | LG 308 |
| 265-500 | 15-004 | LG 282 |
| 265-504 | 75-098 | LG 251 |
| 265-504 | 75-365 | LG 862 |
| 265-513 | 15-113 | LG 282 |
| 265-516 | 75-001 | LG 308 |
| 265-524 | 115-209 | LG 306 |
| 265-525 | 15-014 | LG 251 |
| 265-533 | 75-980 | LG 863 |
| 265-534 | 15-795 | LG 320 |
| 265-535 | 15-111 | LG 273 |
| 265-536 | 75-021 | LG 274 |
| 265-545 | 15-127 | LG 284 |
| 265-549 | 15-106 | LG 273 |
| 265-550 | 75-035 | LG 302 |
| 265-552 | 15-133 | LG 306 |
| 265-555 | 15-118 | LG 283 |
| 265-556 | 15-112 | LG 305 |
| 265-557 | 75-119 | LG 302 |
| 265-562 | 15-107 | LG 273 |
| 265-563 | 15-047 | |
| 265-565 | 75-807 | LG 255 |
| 265-570 | 15-140 | LG 323 |
| 265-577 | 75-063 | LG 307 |
| 265-603 | 75-038 | LG 307 |
| 265-604 | 15-129 | LG 292 |
| 265-617 | 15-119 | LG 283 |
| 265-619 | 75-211 | LG 277 |
| 265-623 | 75-371 | LG 316 |
| 265-627 | 75-058 | LG 255 |
| 265-628 | 15-114 | LG 282 |
| 265-630 | 15-053 | LG 305 |
| 265-631 | 15-054 | LG 324 |
| 265-638 | 75-299 | LG 295 |
| 265-639 | 75-973 | LG 294 |
| 265-640 | 75-248 | LG 294 |
| 265-641 | 115-206 | LG 294 |
| 265-644 | 15-125 | LG 284 |
| 265-645 | 75-057 | LG 307 |
| 265-649 | 75-031 | LG 278 |
| 265-650 | 15-121 | LG 284 |
| 265-653 | 15-134 | LG 314 |
| 265-656 | 75-212 | LG 268 |
| 265-660 | 15-050 | LG 323 |
| 265-662 | 15-013 | LG 256 |
| 265-665 | 15-131 | LG 296 |
| 265-668 | 15-056 | LG 331 |
| 265-670 | 15-141 | LG 323 |
| 265-672 | 75-272 | LG 684 |
| 265-673 | 15-036 | LG 295 |
| 265-675 | 15-132 | LG 306 |
| 265-676 | 75-120 | LG 300 |
| 265-678 | 75-060 | LG 322 |
| 265-681 | 15-040 | LG 296 |
| 265-683 | 15-039 | LG 296 |
| 265-685 | 15-038 | LG 296 |
| 265-686 | 15-746 | LG 317 |
| 265-686 | 75-105 | LG 319 |
| 265-690 | 15-741 | LG 317 |
| 265-698 | 15-057 | LG 331 |
| 265-700 | 15-605 | LG 275 |
| 265-707 | 75-757 | LG 256 |
| 265-709 | 75-759 | LG 279 |
| 265-711 | 15-019 | LG 279 |
| 265-716 | 15-137 | LG 323 |
| 265-725 | 15-017 | LG 279 |
| 265-726 | 75-755 | LG 258 |
| 265-727 | 15-018 | LG 279 |
| 265-730 | 75-756 | LG 279 |
| 265-732 | 75-165 | LG 322 |
| 265-740 | 75-154 | LG 312 |
| 265-741 | 15-104 | LG 269 |
| 265-744 | 75-955 | LG 278 |
| 265-746 | 15-105 | LG 269 |
| 265-748 | 75-054 | LG 312 |
| 265-751 | 15-101 | LG 269 |
| 265-753 | 15-108 | LG 273 |
| 265-754 | 15-102 | LG 269 |
| 265-757 | 15-103 | LG 269 |
| 265-759 | 15-041 | LG 297 |
| 265-764 | 15-144 | LG 323 |
| 265-768 | 15-045 | LG 314 |
| 265-777 | 15-042 | LG 297 |
| 265-781 | 15-188 | LG 285 |
| 265-793 | 75-145 | LG 300 |
| 265-794 | 15-548 | LG 298 |
| 265-800 | 15-109 | LG 273 |
| 265-801 | 75-022 | LG 307 |
| 265-802 | 75-812 | LG 275 |
| 265-803 | 75-134 | LG 275 |
| 265-804 | 115-208 | LG 275 |
| 265-807 | 75-658 | LG 275 |
| 265-808 | 75-912 | LG 255 |
| 265-809 | 75-192 | LG 251 |
| 265-810 | 75-674 | LG 303 |
| 265-811 | 75-158 | LG 251 |
| 265-812 | 75-118 | LG 302 |
| 265-814 | 75-361 | LG 254 |
| 265-815 | 75-151 | LG 308 |
| 265-817 | 75-218 | LG 316 |
| 265-818 | 75-913 | LG 291 |
| 265-821 | 75-655 | LG 274 |
| 265-824 | 75-659 | LG 275 |
| 265-825 | 75-654 | LG 263 |
| 265-826 | 75-919 | LG 293 |
| 265-828 | 75-992 | LG 293 |
| 265-829 | 75-178 | LG 281 |
| 265-831 | 15-049 | LG 323 |
| 265-832 | 75-235 | LG 281 |
| 265-832 | 75-667 | LG 282 |
| 265-833 | 75-230 | LG 281 |
| 265-834 | 75-232 | LG 281 |
| 265-835 | 15-731 | LG 316 |
| 265-836 | 75-963 | LG 281 |
| 265-838 | 75-225 | LG 322 |
| 265-839 | 15-320 | LG 272 |
| 265-842 | 75-231 | LG 281 |
| 265-843 | 75-086 | LG 265 |
| 265-845 | 75-292 | LG 281 |
| 265-849 | 75-664 | LG 279 |
| 265-850 | 75-662 | LG 258 |
| 265-852 | 75-665 | LG 279 |
| 265-853 | 75-712 | LG 310 |
| 265-856 | 75-663 | LG 279 |
| 265-858 | 75-957 | LG 282 |
| 265-859 | 75-240 | LG 297 |
| 265-860 | 15-052 | LG 315 |
| 265-861 | 75-370 | LG 257 |
| 265-862 | 75-632 | LG 314 |
| 265-864 | 75-637 | LG 253 |
| 265-865 | 75-641 | LG 314 |
| 265-866 | 75-642 | LG 314 |
| 265-867 | 75-372 | LG 316 |
| 265-869 | 75-644 | LG 314 |
| 265-870 | 75-645 | LG 314 |
| 265-872 | 75-646 | LG 257 |
| 265-873 | 75-047 | LG 313 |
| 265-874 | 75-048 | LG 313 |
| 265-876 | 75-058 | LG 255 |
| 265-883 | 75-720 | LG 270 |
| 265-887 | 15-016 | LG 323 |
| 265-890 | 75-373 | LG 322 |
| 265-903 | 75-906 | LG 251 |
| 265-905 | 75-907 | LG 264 |
| 265-907 | 75-908 | LG 265 |
| 265-909 | 75-909 | LG 251 |
| 265-910 | 75-672 | LG 294 |
| 265-912 | 75-983 | LG 862 |
| 265-913 | 75-159 | LG 303 |
| 265-914 | 75-084 | LG 265 |
| 265-918 | 75-160 | LG 303 |
| 265-921 | 15-012 | LG 299 |
| 265-924 | 15-011 | LG 299 |
| 265-925 | 15-501 | LG 294 |
| 265-926 | 75-713 | LG 310 |
| 265-928 | 75-095 | LG 268 |
| 265-929 | 75-939 | LG 322 |
| 265-930 | 75-711 | LG 310 |
| 265-932 | 75-949 | LG 330 |
| 265-934 | 75-999 | LG 253 |
| 265-938 | 75-197 | LG 262 |
| 265-942 | 75-144 | LG 284 |

## STENS

| PART No. | OREGON | Page |
|---|---|---|
| 265-944 | 15-120 | LG 284 |
| 265-948 | 75-207 | LG 256 |
| 265-952 | 75-193 | LG 269 |
| 265-953 | 15-136 | LG 314 |
| 265-956 | 115-212 | LG 325 |
| 265-957 | 15-843 | LG 325 |
| 265-962 | 15-844 | LG 325 |
| 265-978 | 115-218 | LG 331 |
| 265-987 | 75-117 | LG 265 |
| 265-991 | 75-096 | LG 265 |
| 265-994 | 75-951 | LG 331 |
| 265-995 | 75-087 | LG 265 |
| 265-996 | 75-952 | LG 330 |
| 265-998 | 75-948 | LG 331 |
| 269-099 | 75-295 | LG 295 |
| 269-924 | 15-011 | LG 299 |
| 275-012 | 44-340 | LG 838 |
| 275-020 | 78-690 | LG 840 |
| 275-220 | 44-347 | LG 840 |
| 275-240 | 44-342 | LG 839 |
| 275-260 | 78-649 | LG 841 |
| 275-272 | 78-121 | LG 827 |
| 275-276 | 44-302 | LG 841 |
| 275-280 | 44-371 | LG 834 |
| 275-284 | 44-370 | LG 834 |
| 275-339 | 44-306 | LG 840 |
| 275-404 | 44-313 | LG 840 |
| 275-450 | 44-368 | LG 837 |
| 275-469 | 44-100 | LG 837 |
| 275-487 | 44-319 | LG 840 |
| 275-515 | 44-102 | LG 85 |
| 275-519 | 44-369 | LG 837 |
| 275-529 | 44-321 | LG 840 |
| 275-537 | 44-322 | LG 840 |
| 275-564 | 78-680 | LG 840 |
| 275-594 | 44-323 | LG 838 |
| 275-644 | 44-341 | LG 839 |
| 275-697 | 78-673 | LG 839 |
| 275-727 | 44-332 | LG 838 |
| 275-780 | 44-366 | LG 837 |
| 275-840 | 78-003 | LG 839 |
| 275-875 | 78-640 | LG 835 |
| 275-891 | 34-106 | LG 830 |
| 275-891 | 34-107 | LG 823 |
| 275-909 | 78-641 | LG 835 |
| 275-945 | 78-642 | LG 841 |
| 280-016 | 34-002 | LG 821 |
| 280-020 | 34-210 | LG 834 |
| 280-024 | 34-003 | LG 821 |
| 280-028 | 34-021 | LG 833 |
| 280-032 | 34-005 | LG 821 |
| 280-040 | 34-006 | LG 821 |
| 280-044 | 78-028 | LG 831 |
| 280-052 | 34-820 | LG 833 |
| 280-057 | 34-008 | LG 821 |
| 280-065 | 34-009 | LG 821 |
| 280-065 | 34-010 | LG 831 |
| 280-073 | 34-011 | LG 821 |
| 280-081 | 34-012 | LG 821 |
| 280-084 | 78-118-0 | LG 830 |
| 280-097 | 78-129 | LG 830 |
| 280-099 | 34-015 | LG 821 |
| 280-099 | 78-114 | LG 829 |
| 280-107 | 34-017 | LG 821 |
| 280-115 | 34-018 | LG 821 |
| 280-123 | 34-019 | LG 821 |
| 280-127 | 34-042 | LG 823 |
| 280-131 | 34-020 | LG 821 |
| 280-131 | 78-044-1 | LG 834 |
| 280-135 | 34-041 | LG 831 |
| 280-135 | 78-050 | LG 831 |
| 280-143 | 34-102 | LG 830 |
| 280-149 | 34-022 | LG 822 |
| 280-156 | 34-023 | LG 822 |
| 280-156 | 78-031 | LG 826 |
| 280-164 | 34-007 | LG 826 |
| 280-164 | 34-024 | LG 822 |
| 280-164 | 78-021 | LG 832 |
| 280-164 | 78-112 | LG 829 |
| 280-214 | 34-015 | LG 821 |
| 280-238 | 78-053 | LG 824 |
| 280-239 | 78-052 | LG 824 |
| 280-240 | 78-013 | LG 825 |
| 280-241 | 34-103 | LG 830 |
| 280-242 | 34-109 | LG 831 |
| 280-242 | 78-133 | LG 831 |
| 280-248 | 34-030 | LG 821 |
| 280-248 | 78-019 | LG 831 |
| 280-255 | 34-031 | LG 821 |
| 280-263 | 34-033 | LG 821 |
| 280-271 | 34-034 | LG 821 |
| 280-279 | 34-209 | LG 826 |
| 280-297 | 34-036 | LG 821 |
| 280-301 | 78-128 | LG 829 |
| 280-305 | 34-037 | LG 821 |
| 280-309 | 78-131 | LG 823 |
| 280-313 | 34-038 | LG 821 |
| 280-321 | 34-044 | LG 821 |
| 280-321 | 78-113 | LG 829 |
| 280-333 | 78-010 | LG 827 |
| 280-339 | 34-042 | LG 823 |
| 280-339 | 34-824 | LG 832 |
| 280-347 | 34-043 | LG 823 |
| 280-362 | 34-022 | LG 822 |
| 280-362 | 78-029 | LG 831 |
| 280-362 | 78-041 | LG 823 |
| 280-378 | 78-045 | LG 828 |
| 280-382 | 34-822 | LG 832 |
| 280-386 | 34-066 | LG 832 |
| 280-438 | 34-013 | LG 824 |
| 280-438 | 34-014 | LG 831 |
| 280-446 | 34-028 | LG 821 |
| 280-453 | 34-029 | LG 821 |
| 280-499 | 34-826 | LG 833 |
| 280-499 | 78-027 | LG 832 |
| 280-529 | 78-032 | LG 822 |
| 280-578 | 78-034 | LG 822 |
| 280-586 | 78-033 | LG 834 |
| 280-602 | 78-043 | LG 824 |
| 280-651 | 78-046 | LG 826 |
| 280-651 | 78-098 | LG 832 |
| 280-651 | 78-110 | LG 833 |
| 280-671 | 34-046 | LG 824 |
| 280-685 | 34-004 | LG 832 |
| 280-709 | 34-009 | LG 821 |
| 280-719 | 34-024 | LG 822 |
| 280-743 | 34-039 | LG 834 |
| 280-750 | 34-032 | LG 834 |
| 280-754 | 78-041 | LG 823 |
| 280-770 | 34-049 | LG 824 |
| 280-770 | 78-049 | LG 833 |
| 280-773 | 34-104 | LG 830 |
| 280-794 | 34-201 | LG 822 |
| 280-798 | 34-205 | LG 826 |
| 280-802 | 34-206 | LG 826 |
| 280-810 | 34-100 | LG 830 |
| 280-838 | 78-023 | LG 822 |
| 280-850 | 78-009 | LG 827 |
| 280-858 | 78-130 | LG 829 |
| 280-862 | 78-011 | LG 827 |
| 280-866 | 78-005 | LG 823 |
| 280-874 | 78-006 | LG 828 |
| 280-874 | 78-022 | LG 827 |
| 280-954 | 78-134 | LG 829 |
| 285-003 | 45-116 | LG 939 |
| 285-011 | 09-803 | LG 697 |
| 285-031 | 82-678 | LG 904 |
| 285-041 | 82-510 | LG 872 |
| 285-084 | 82-503 | LG 895 |
| 285-088 | 82-502 | LG 894 |
| 285-092 | 82-501 | LG 894 |
| 285-093 | 82-356 | LG 893 |
| 285-095 | 85-029 | LG 909 |
| 285-097 | 85-028 | LG 908 |
| 285-104 | 04-015 | LG 899 |
| 285-105 | 82-517 | LG 896 |
| 285-107 | 82-411 | LG 878 |
| 285-108 | 82-015 | |
| 285-110 | 82-500 | LG 893 |
| 285-112 | 82-516 | LG 896 |
| 285-113 | 82-515 | LG 896 |
| 285-114 | 84-010 | LG 913 |
| 285-116 | 82-512 | LG 895 |
| 285-117 | 82-511 | LG 895 |
| 285-117 | 85-053 | LG 907 |
| 285-119 | 82-513-2 | LG 896 |
| 285-130 | 85-008 | LG 909 |
| 285-174 | 82-245 | |
| 285-181 | 82-328 | LG 891 |
| 285-187 | 85-012 | LG 909 |
| 285-191 | 82-322 | LG 883 |
| 285-194 | 82-347 | LG 885 |
| 285-194 | 82-348 | LG 885 |
| 285-201 | 82-350 | LG 889 |
| 285-205 | 82-514 | LG 869 |
| 285-213 | 82-677 | LG 903 |
| 285-215 | 82-022 | LG 886 |
| 285-217 | 82-308 | LG 874 |
| 285-221 | 82-493 | LG 869 |
| 285-239 | 85-001 | LG 908 |
| 285-300 | 82-042 | LG 891 |
| 285-312 | 82-403 | LG 879 |
| 285-332 | 82-023 | LG 902 |
| 285-332 | 82-243 | LG 902 |
| 285-342 | 45-250 | LG 243 |
| 285-354 | 82-040 | LG 890 |
| 285-358 | 82-041 | LG 890 |
| 285-369 | 82-221 | LG 872 |
| 285-373 | 85-023 | LG 907 |
| 285-383 | 82-014 | LG 871 |
| 285-395 | 02-442 | LG 803 |
| 285-427 | 82-244 | LG 910 |
| 285-435 | 82-250 | LG 902 |
| 285-441 | 82-024 | LG 871 |
| 285-441 | 82-220 | LG 871 |
| 285-445 | 46-024 | LG 719 |
| 285-452 | 85-005 | |
| 285-456 | 82-225 | LG 871 |
| 285-464 | 85-017 | LG 907 |
| 285-487 | 45-110 | LG 245 |
| 285-498 | 48-202 | LG 694 |
| 285-544 | 05-061 | LG 914 |
| 285-585 | 82-026 | LG 872 |
| 285-597 | 82-325 | LG 903 |
| 285-635 | 05-060 | LG 914 |
| 285-639 | 82-344 | LG 885 |
| 285-639 | 82-346 | LG 885 |
| 285-688 | 48-200 | LG 694 |
| 285-795 | 82-318 | LG 884 |
| 285-809 | 82-306 | LG 874 |
| 285-821 | 09-804 | LG 233 |
| 285-866 | 48-205 | LG 694 |
| 285-878 | 82-679 | LG 870 |
| 285-886 | 82-495 | LG 870 |
| 285-895 | 82-680 | LG 870 |
| 285-920 | 48-145 | LG 698 |
| 285-928 | 82-518 | LG 897 |
| 285-936 | 82-408 | LG 878 |
| 285-940 | 82-307-0 | LG 874 |
| 285-952 | 76-100 | LG 939 |
| 285-957 | 09-801 | LG 229 |
| 290-015 | 60-860 | LG 701 |
| 290-023 | 60-209 | LG 700 |
| 290-064 | 60-408 | LG 700 |
| 290-080 | 60-106 | LG 701 |
| 290-102 | 46-300 | LG 717 |
| 290-106 | 60-400 | LG 700 |
| 290-110 | 60-220 | LG 708 |
| 290-134 | 46-050 | LG 711 |
| 290-155 | 60-046 | LG 700 |
| 290-163 | 60-036 | LG 701 |
| 290-175 | 60-420 | LG 717 |
| 290-183 | 60-420 | LG 717 |
| 290-191 | 60-427 | LG 717 |
| 290-195 | 60-188 | LG 718 |
| 290-203 | 60-426 | LG 699 |
| 290-213 | 46-310 | LG 713 |
| 290-245 | 46-325 | LG 701 |
| 290-249 | 60-004 | LG 701 |
| 290-253 | 60-000 | LG 702 |
| 290-278 | 46-321 | LG 707 |
| 290-282 | 60-003 | LG 710 |
| 290-286 | 60-124 | LG 710 |
| 290-288 | 60-160 | LG 701 |
| 290-296 | 60-409 | LG 700 |
| 290-316 | 60-002 | LG 710 |
| 290-387 | 46-315 | LG 717 |
| 290-411 | 60-991 | LG 718 |
| 290-427 | 46-051 | LG 712 |
| 290-435 | 46-302 | LG 709 |
| 290-443 | 46-306 | LG 708 |
| 290-451 | 46-319 | LG 712 |
| 290-595 | 60-410 | LG 703 |
| 290-623 | 46-322 | LG 701 |

# 2019 Aftermarket X-Reference

## STENS

| PART No. | OREGON | Page |
|---|---|---|
| 290-835 | 60-122 | LG 721 |
| 290-899 | 60-014 | LG 712 |
| 290-904 | 46-006 | LG 712 |
| 295-014 | 74-732 | LG 721 |
| 295-048 | 74-317 | LG 721 |
| 295-055 | 74-054 | LG 721 |
| 295-063 | 74-072 | LG 721 |
| 295-174 | 79-000 | LG 802 |
| 295-240 | 81-012 | LG 802 |
| 295-261 | 02-107 | LG 723 |
| 295-262 | 02-107 | LG 723 |
| 295-279 | 02-115 | LG 723 |
| 295-280 | 02-115 | LG 723 |
| 295-287 | 02-099 | LG 722 |
| 295-288 | 02-099 | LG 722 |
| 295-295 | 02-098 | LG 722 |
| 295-296 | 02-098 | LG 722 |
| 295-547 | 60-012-0 | LG 712 |
| 300-012 | 90-143 | LG 368 |
| 300-020 | 90-144 | LG 368 |
| 300-038 | 90-145 | LG 368 |
| 300-046 | 90-146 | LG 368 |
| 300-300 | 69-260-0 | |
| 300-304 | 69-261-0 | |
| 300-308 | 69-262-0 | |
| 300-509 | 90-622 | LG 368 |
| 300-513 | 95-042 | LG 468 |
| 300-517 | 90-621 | LG 368 |
| 300-525 | 90-620 | LG 368 |
| 300-529 | 95-041 | LG 401 |
| 300-565 | 95-082 | LG 372 |
| 300-722 | 97-021 | LG 524 |
| 300-766 | 95-099 | LG 400 |
| 300-914 | 91-266 | LG 431 |
| 302-076 | 96-630 | LG 556 |
| 302-204 | 96-343 | LG 395 |
| 302-244 | 596-329 | LG 578 |
| 302-248 | 96-346 | LG 449 |
| 302-256 | 596-306 | LG 487 |
| 302-260 | 96-309 | LG 488 |
| 302-268 | 96-620 | LG 551 |
| 302-284 | 96-600 | LG 569 |
| 302-288 | 596-332 | LG 484 |
| 302-400 | 96-900 | LG 526 |
| 302-402 | 596-719 | LG 488 |
| 302-404 | 98-629 | LG 412 |
| 302-408 | 96-615 | LG 461 |
| 302-410 | 95-601 | LG 423 |
| 302-412 | 91-938 | LG 514 |
| 302-414 | 96-332 | LG 484 |
| 302-420 | 92-676 | LG 491 |
| 302-422 | 96-401 | LG 404 |
| 302-424 | 596-601 | LG 474 |
| 302-426 | 96-370 | LG 533 |
| 302-428 | 598-640 | LG 405 |
| 302-430 | 95-605 | LG 463 |
| 302-436 | 595-609 | LG 461 |
| 302-438 | 96-354 | LG 484 |
| 302-440 | 92-616 | LG 485 |
| 302-444 | 92-675 | LG 484 |
| 302-456 | 92-615 | LG 491 |
| 302-460 | 396-709 | LG 489 |
| 302-462 | 96-607 | LG 571 |
| 302-470 | 98-631 | LG 390 |
| 302-480 | 97-601 | LG 527 |
| 302-536 | 596-900 | LG 380 |
| 302-615 | 396-716 | LG 451 |
| 302-616 | 96-310 | LG 444 |
| 302-617 | 96-308 | LG 456 |
| 302-619 | 96-322 | LG 567 |
| 302-620 | 96-319 | LG 415 |
| 302-621 | 96-347 | LG 387 |
| 302-623 | 96-749 | LG 433 |
| 302-624 | 94-620 | LG 414 |
| 302-625 | 96-699 | LG 442 |
| 302-630 | 96-363 | LG 499 |
| 302-636 | 96-701 | LG 568 |
| 302-648 | 96-346 | LG 449 |
| 302-660 | 596-808 | LG 472 |
| 302-686 | 96-708 | LG 571 |
| 302-690 | 96-306 | LG 538 |
| 302-694 | 96-802 | LG 568 |
| 302-717 | 96-323 | LG 477 |
| 302-718 | 392-206 | LG 436 |
| 302-720 | 92-915 | LG 440 |
| 302-817 | 96-308 | LG 456 |
| 302-818 | 96-344 | LG 536 |
| 302-820 | 96-319 | LG 415 |
| 302-821 | 96-347 | LG 387 |
| 302-821 | 96-702 | LG 491 |
| 302-822 | 96-749 | LG 433 |
| 302-825 | 396-764 | LG 537 |
| 302-827 | 392-057 | LG 443 |
| 302-827 | 92-911 | LG 442 |
| 302-835 | 96-363 | LG 499 |
| 302-837 | 96-372 | LG 500 |
| 303-052 | 91-256 | LG 437 |
| 303-060 | 91-308 | LG 467 |
| 303-104 | 596-310 | LG 447 |
| 303-108 | 96-308 | LG 456 |
| 303-112 | 596-323 | LG 453 |
| 303-116 | 96-344 | LG 536 |
| 303-120 | 596-319 | LG 415 |
| 303-124 | 596-347 | LG 448 |
| 303-128 | 396-752 | LG 415 |
| 303-136 | 91-183 | LG 370 |
| 303-144 | 91-505 | LG 477 |
| 303-148 | 94-053 | LG 503 |
| 303-168 | 99-127 | LG 375 |
| 303-184 | 91-378 | LG 414 |
| 303-188 | 91-308 | LG 467 |
| 303-196 | 91-254 | LG 456 |
| 303-324 | 596-319 | LG 415 |
| 303-332 | 596-347 | LG 448 |
| 303-336 | 396-726 | LG 391 |
| 303-348 | 596-310 | LG 447 |
| 303-392 | 396-735 | LG 452 |
| 303-396 | 596-323 | LG 453 |
| 305-589 | 191-015 | LG 372 |
| 305-599 | 96-005 | |
| 305-603 | 91-003 | LG 370 |
| 305-730 | 91-005 | LG 458 |
| 305-771 | 91-003 | LG 370 |
| 30-872 | 98-099 | LG 412 |
| 310-003 | 93-005 | LG 447 |
| 310-011 | 93-006 | LG 444 |
| 310-033 | 93-005 | LG 447 |
| 310-045 | 93-005 | LG 447 |
| 310-052 | 93-006 | LG 444 |
| 310-078 | 93-008 | LG 510 |
| 310-086 | 93-011 | LG 557 |
| 310-102 | 93-009 | LG 476 |
| 310-110 | 93-010 | LG 432 |
| 310-300 | 91-096 | LG 389 |
| 310-326 | 91-097 | LG 388 |
| 310-366 | 91-117 | LG 475 |
| 310-410 | 91-034 | LG 583 |
| 315-006 | 91-500 | LG 416 |
| 315-018 | 91-146 | LG 419 |
| 315-036 | 91-167 | LG 416 |
| 315-250 | 90-109 | LG 414 |
| 315-254 | 91-507 | LG 415 |
| 315-499 | 91-515 | LG 415 |
| 315-511 | 92-038 | LG 392 |
| 315-762 | 91-342 | LG 447 |
| 315-792 | 91-253 | LG 415 |
| 315-868 | 91-183 | LG 370 |
| 315-872 | 91-209 | LG 552 |
| 315-876 | 91-235 | LG 461 |
| 320-006 | 91-547 | LG 449 |
| 320-010 | 91-536 | LG 395 |
| 320-014 | 91-534 | LG 578 |
| 320-018 | 91-531 | LG 393 |
| 320-026 | 91-544 | LG 397 |
| 320-028 | 91-557 | LG 545 |
| 320-036 | 91-532 | LG 448 |
| 320-040 | 91-532 | LG 448 |
| 320-044 | 91-558 | LG 448 |
| 320-048 | 91-558 | LG 448 |
| 320-406 | 92-158 | LG 453 |
| 320-410 | 92-416 | LG 456 |
| 320-507 | 91-244 | LG 450 |
| 320-515 | 91-242 | LG 371 |
| 320-519 | 91-254 | LG 456 |
| 320-564 | 91-253 | LG 415 |
| 320-564 | 91-255 | LG 454 |
| 325-001 | 91-291 | LG 457 |
| 325-005 | 91-444 | LG 457 |
| 325-009 | 91-516 | LG 457 |
| 325-013 | 91-517 | LG 457 |
| 325-017 | 91-516 | LG 457 |
| 325-100 | 92-101 | LG 458 |
| 325-104 | 92-102 | LG 458 |
| 325-134 | 91-327 | LG 404 |
| 325-142 | 91-330 | LG 513 |
| 325-175 | 91-329 | LG 409 |
| 325-179 | 92-015 | LG 407 |
| 325-183 | 198-086 | LG 565 |
| 325-278 | 98-081 | LG 406 |
| 325-286 | 91-057 | LG 409 |
| 325-290 | 98-087 | LG 407 |
| 325-294 | 98-080 | LG 512 |
| 325-298 | 98-082 | LG 513 |
| 325-302 | 98-083 | LG 404 |
| 325-442 | 91-073 | LG 512 |
| 325-735 | 91-058 | LG 411 |
| 325-742 | 91-057 | LG 409 |
| 325-746 | 91-056 | LG 406 |
| 325-827 | 92-140 | LG 516 |
| 325-837 | 91-414 | LG 405 |
| 325-841 | 91-333 | LG 406 |
| 325-845 | 91-415 | LG 406 |
| 325-849 | 91-440 | LG 408 |
| 325-856 | 91-332 | LG 412 |
| 325-908 | 91-442 | LG 518 |
| 330-005 | 91-435 | LG 498 |
| 330-149 | 99-127 | LG 375 |
| 330-150 | 92-144 | LG 485 |
| 330-213 | 91-364 | LG 481 |
| 330-217 | 91-363 | LG 481 |
| 330-266 | 91-389 | LG 538 |
| 330-282 | 91-391 | LG 489 |
| 330-290 | 191-392 | LG 488 |
| 330-302 | 92-025 | LG 440 |
| 330-308 | 91-393 | LG 485 |
| 330-316 | 91-400 | LG 488 |
| 330-324 | 91-399 | LG 493 |
| 330-356 | 91-448 | LG 482 |
| 330-357 | 91-394 | LG 489 |
| 330-365 | 91-380 | LG 538 |
| 330-369 | 90-348 | LG 484 |
| 330-373 | 91-381 | LG 483 |
| 330-377 | 91-449 | LG 492 |
| 330-389 | 91-383 | LG 484 |
| 330-393 | 91-384 | LG 487 |
| 330-401 | 91-404 | LG 487 |
| 330-405 | 91-401 | LG 483 |
| 330-429 | 91-443 | LG 489 |
| 330-437 | 91-138 | LG 488 |
| 330-441 | 192-106 | LG 491 |
| 330-445 | 92-104 | LG 485 |
| 330-453 | 92-119 | LG 492 |
| 330-489 | 90-354 | LG 488 |
| 330-501 | 92-113 | LG 490 |
| 330-505 | 92-114 | LG 493 |
| 330-542 | 91-436 | LG 498 |
| 330-552 | 91-438 | LG 500 |
| 330-555 | 91-430 | LG 497 |
| 330-587 | 91-587 | LG 490 |
| 330-591 | 91-078 | LG 490 |
| 330-595 | 91-138 | LG 488 |
| 330-615 | 191-139 | LG 491 |
| 330-619 | 191-108 | LG 484 |
| 330-688 | 91-395 | LG 493 |
| 330-704 | 92-103 | LG 487 |
| 330-724 | 92-109 | LG 489 |
| 330-728 | 92-110 | LG 491 |
| 330-736 | 91-403 | LG 488 |
| 330-742 | 90-354 | LG 488 |
| 330-823 | 92-049 | LG 500 |
| 330-827 | 92-116 | LG 500 |
| 330-845 | 92-011 | LG 490 |
| 330-872 | 98-093 | LG 411 |
| 3339 | 91-255 | LG 454 |
| 335-008 | 97-010 | LG 524 |
| 335-012 | 97-118 | LG 524 |
| 335-016 | 97-119 | LG 525 |
| 335-030 | 97-006 | LG 525 |
| 335-038 | 97-123 | LG 537 |
| 335-042 | 99-121 | LG 551 |
| 335-050 | 97-017 | LG 537 |
| 335-059 | 97-330 | LG 528 |
| 335-063 | 97-014 | LG 527 |
| 335-067 | 98-499 | LG 519 |

X

## STENS

| PART No. | OREGON | Page |
|---|---|---|
| 335-069 | 91-129 | LG 396 |
| 335-071 | 97-024 | LG 525 |
| 335-075 | 97-018 | LG 523 |
| 335-083 | 98-002 | LG 401 |
| 335-117 | 98-487 | LG 513 |
| 335-125 | 98-486 | LG 512 |
| 335-166 | 97-109 | LG 525 |
| 335-168 | 91-313 | LG 494 |
| 335-170 | 98-496 | LG 515 |
| 335-174 | 97-105 | LG 523 |
| 335-182 | 97-107 | LG 524 |
| 335-214 | 198-049 | LG 518 |
| 335-240 | 99-107 | LG 551 |
| 335-307 | 99-112 | LG 556 |
| 335-315 | 99-113 | LG 528 |
| 335-331 | 99-117 | LG 556 |
| 335-356 | 99-103 | LG 551 |
| 335-414 | 79-724 | LG 556 |
| 335-422 | 79-728 | LG 556 |
| 335-471 | 97-005 | LG 527 |
| 335-475 | 97-003 | |
| 335-479 | 97-004 | |
| 335-524 | 97-105 | LG 523 |
| 335-525 | 98-057 | LG 513 |
| 335-533 | 98-056 | LG 512 |
| 335-553 | 98-056 | LG 512 |
| 335-570 | 98-019 | LG 516 |
| 335-586 | 198-052 | LG 389 |
| 335-608 | 98-051 | LG 521 |
| 335-624 | 198-058 | LG 517 |
| 335-628 | 98-005 | LG 521 |
| 335-632 | 98-050 | LG 521 |
| 335-650 | 98-064-1 | LG 514 |
| 335-653 | 98-037 | LG 574 |
| 335-665 | 98-068 | LG 389 |
| 335-677 | 98-098 | LG 410 |
| 335-691 | 198-063 | LG 513 |
| 335-695 | 98-061 | LG 404 |
| 335-707 | 198-059 | LG 403 |
| 335-711 | 198-153 | LG 520 |
| 335-715 | 98-066 | LG 409 |
| 335-719 | 98-054 | LG 574 |
| 335-723 | 98-069 | LG 404 |
| 335-757 | 98-096 | LG 404 |
| 335-760 | 97-016 | LG 524 |
| 335-764 | 97-020 | LG 526 |
| 335-778 | 97-015 | LG 527 |
| 335-790 | 98-537 | LG 516 |
| 335-810 | 97-105 | LG 523 |
| 335-814 | 98-007 | LG 401 |
| 335-822 | 97-001 | LG 527 |
| 335-855 | 98-072 | LG 408 |
| 335-859 | 198-086 | LG 565 |
| 335-869 | 97-110 | LG 525 |
| 335-877 | 98-044 | LG 409 |
| 335-943 | 98-001 | LG 517 |
| 340-008 | 95-023 | LG 380 |
| 340-012 | 95-024 | LG 465 |
| 340-016 | 95-034 | LG 377 |
| 340-022 | 95-031 | LG 377 |
| 340-030 | 95-045 | LG 374 |
| 340-034 | 95-014 | LG 374 |
| 340-038 | 95-052 | LG 398 |
| 340-042 | 95-015 | LG 400 |
| 340-054 | 195-019 | LG 466 |
| 340-062 | 195-021 | LG 468 |
| 340-066 | 195-005 | LG 373 |
| 340-070 | 95-052 | LG 398 |
| 340-079 | 195-003 | LG 400 |
| 340-091 | 95-068 | LG 376 |
| 340-099 | 91-628 | LG 387 |
| 340-109 | 91-620 | LG 470 |
| 340-113 | 91-621 | LG 563 |
| 340-117 | 91-626 | LG 552 |
| 340-121 | 91-623 | LG 485 |
| 340-125 | 95-027 | LG 398 |
| 340-129 | 91-627 | LG 482 |
| 340-130 | 91-627 | LG 482 |
| 340-137 | 195-021 | LG 468 |
| 340-145 | 95-006 | LG 397 |
| 340-149 | 95-018 | LG 399 |
| 340-153 | 95-036 | LG 463 |
| 340-157 | 95-051 | LG 465 |
| 340-158 | 91-312 | LG 478 |
| 340-162 | 195-033 | LG 400 |
| 340-166 | 95-026 | LG 376 |
| 340-170 | 95-047 | LG 378 |
| 340-172 | 99-126 | LG 501 |
| 340-178 | 195-032 | LG 425 |
| 340-218 | 95-044 | LG 465 |
| 340-220 | 91-505 | LG 477 |
| 340-222 | 195-062 | LG 376 |
| 340-226 | 195-072 | LG 530 |
| 340-230 | 195-070 | LG 469 |
| 340-248 | 95-057 | LG 380 |
| 3403 | 94-125 | LG 563 |
| 340-440 | 195-048 | LG 430 |
| 340-570 | 95-011 | |
| 340-622 | 95-073 | LG 533 |
| 340-700 | 94-045 | LG 571 |
| 340-878 | 91-637 | LG 507 |
| 340-882 | 91-638 | LG 426 |
| 345-037 | 94-322 | LG 520 |
| 345-070 | 91-706 | LG 550 |
| 345-074 | 92-147 | LG 559 |
| 345-085 | 91-585 | LG 493 |
| 345-102 | 91-701 | LG 545 |
| 345-106 | 91-723 | LG 508 |
| 345-108 | 91-713 | LG 422 |
| 345-116 | 91-714 | LG 543 |
| 345-124 | 91-715 | LG 541 |
| 345-156 | 94-029 | LG 414 |
| 345-165 | 94-032 | LG 568 |
| 345-173 | 94-127 | LG 569 |
| 345-177 | 94-040 | LG 573 |
| 345-231 | 91-705 | LG 540 |
| 345-235 | 91-703 | LG 541 |
| 345-314 | 94-011 | LG 572 |
| 345-397 | 94-017 | LG 441 |
| 345-409 | 91-079 | LG 485 |
| 345-411 | 91-610 | LG 554 |
| 345-413 | 94-021 | LG 573 |
| 345-421 | 94-019 | LG 570 |
| 345-429 | 94-051 | LG 570 |
| 345-447 | 94-038 | LG 568 |
| 345-454 | 94-026 | LG 369 |
| 345-462 | 94-022 | LG 565 |
| 345-486 | 94-039 | LG 561 |
| 345-496 | 94-770 | LG 569 |
| 345-672 | 91-766 | LG 579 |
| 345-762 | 91-766 | LG 579 |
| 345-769 | 91-762 | LG 578 |
| 345-777 | 91-761 | LG 578 |
| 345-785 | 91-764 | LG 579 |
| 350-098 | 98-071 | LG 411 |
| 350-108 | 91-804 | LG 560 |
| 350-116 | 91-805 | LG 560 |
| 350-124 | 91-806 | LG 447 |
| 350-148 | 95-076 | LG 404 |
| 350-169 | 92-742 | LG 475 |
| 350-181 | 92-039 | LG 470 |
| 350-199 | 91-502 | LG 477 |
| 350-203 | 98-094 | LG 514 |
| 350-211 | 95-085 | LG 462 |
| 350-219 | 94-063 | LG 564 |
| 350-223 | 94-059 | LG 564 |
| 350-227 | 94-069 | LG 441 |
| 350-372 | 98-091 | LG 516 |
| 350-450 | 91-482 | LG 434 |
| 350-458 | 95-087 | LG 460 |
| 350-528 | 92-139 | LG 398 |
| 350-671 | 90-208 | LG 502 |
| 350-675 | 90-207 | LG 472 |
| 350-683 | 90-205 | LG 501 |
| 350-687 | 92-045 | LG 474 |
| 350-691 | 90-206 | LG 414 |
| 350-695 | 92-208 | LG 472 |
| 355-008 | 91-313 | LG 494 |
| 355-016 | 91-181 | LG 495 |
| 355-022 | 91-218 | LG 420 |
| 355-024 | 91-913 | LG 576 |
| 355-028 | 91-368 | LG 460 |
| 355-032 | 91-912 | LG 576 |
| 355-036 | 91-264 | LG 473 |
| 355-044 | 91-312 | LG 478 |
| 355-052 | 91-217 | LG 558 |
| 355-061 | 91-256 | LG 437 |
| 355-079 | 91-335 | LG 420 |
| 355-085 | 91-369 | LG 434 |
| 355-089 | 91-373 | LG 383 |
| 355-100 | 94-052 | LG 573 |
| 355-105 | 91-311 | LG 439 |
| 355-117 | 91-374 | LG 442 |
| 355-121 | 91-368 | LG 460 |
| 355-177 | 492-730 | LG 440 |
| 355-189 | 492-732 | LG 442 |
| 355-201 | 92-910 | LG 443 |
| 355-205 | 91-311 | LG 439 |
| 355-229 | 92-029 | LG 435 |
| 355-233 | 91-188 | LG 439 |
| 355-275 | 92-027 | LG 432 |
| 355-279 | 92-084 | LG 442 |
| 355-283 | 92-033 | LG 442 |
| 355-287 | 92-031 | LG 433 |
| 355-291 | 92-030 | LG 567 |
| 355-295 | 92-028 | LG 433 |
| 355-331 | 91-506 | LG 473 |
| 355-335 | 92-029 | LG 435 |
| 355-339 | 92-030 | LG 567 |
| 355-343 | 92-031 | LG 433 |
| 355-347 | 92-033 | LG 442 |
| 355-411 | 492-731 | LG 436 |
| 355-411 | 92-912 | LG 436 |
| 355-419 | 92-913 | LG 438 |
| 355-707 | 198-059 | LG 403 |
| 355-709 | 91-918 | LG 576 |
| 355-709 | 91-920 | LG 576 |
| 355-713 | 91-919 | LG 576 |
| 365-015 | 86-005 | LG 782 |
| 365-023 | 86-001 | LG 781 |
| 365-023 | 86-009 | LG 781 |
| 365-047 | 86-019 | LG 781 |
| 365-080 | 86-008 | LG 782 |
| 365-221 | 86-033 | LG 781 |
| 370-302 | 84-102 | LG 954 |
| 370-306 | 84-103 | LG 954 |
| 370-350 | 84-101 | LG 954 |
| 373-017 | 89-001 | LG 590 |
| 373-018 | 89-001 | LG 590 |
| 373-193 | 40-707 | LG 590 |
| 375-014 | 40-402 | LG 589 |
| 375-022 | 40-403 | LG 589 |
| 375-022 | 40-409 | LG 585 |
| 375-030 | 40-502 | LG 586 |
| 375-048 | 40-807 | LG 585 |
| 375-071 | 40-411 | LG 589 |
| 375-147 | 40-514 | LG 589 |
| 375-162 | 40-503 | LG 589 |
| 375-170 | 40-518 | LG 589 |
| 375-200 | 40-141 | LG 585 |
| 375-214 | 40-130 | LG 586 |
| 375-222 | 40-131 | LG 586 |
| 375-230 | 40-502 | LG 586 |
| 375-247 | 40-514 | LG 589 |
| 375-258 | 40-518 | LG 589 |
| 375-262 | 40-503 | LG 589 |
| 375-270 | 40-518 | LG 589 |
| 375-271 | 40-316 | LG 586 |
| 375-287 | 40-316 | LG 586 |
| 375-301 | 40-139 | LG 584 |
| 375-311 | 40-843 | LG 588 |
| 375-352 | 40-131 | LG 586 |
| 375-360 | 40-130 | LG 586 |
| 375-364 | 40-141 | LG 585 |
| 375-382 | 40-140 | LG 584 |
| 375-410 | 40-121 | LG 584 |
| 375-444 | 40-010 | LG 588 |
| 375-485 | 40-845 | LG 588 |
| 375-489 | 40-402 | LG 589 |
| 375-493 | 40-411 | LG 589 |
| 375-525 | 40-840 | LG 588 |
| 375-661 | 40-147 | LG 588 |
| 380-010 | 19-044 | LG 983 |
| 380-011 | 19-043 | LG 983 |
| 380-012 | 19-042 | LG 983 |
| 380-014 | 19-041 | LG 983 |
| 380-135 | 69-195 | LG 980 |
| 380-139 | 69-196 | LG 980 |
| 380-2043 | 69-173 | LG 981 |
| 380-2123 | 69-174 | LG 981 |
| 380-2203 | 69-175 | LG 981 |
| 380-228 | 20-020 | LG 979 |
| 380-232 | 20-021 | LG 979 |
| 380-236 | 20-022 | LG 979 |

X

# 2019 Aftermarket X-Reference

| PART No. | OREGON | Page |
|---|---|---|
| **STENS** | | |
| 380-2383 | 69-176 | LG 981 |
| 380-242 | 21-265 | LG 981 |
| 380-246 | 21-280 | LG 981 |
| 380-250 | 21-295 | LG 981 |
| 380-254 | 21-205 | LG 981 |
| 380-303 | 21-365 | LG 981 |
| 380-311 | 21-380 | LG 981 |
| 380-315 | 20-026 | LG 979 |
| 380-319 | 20-027 | LG 979 |
| 380-323 | 20-028 | LG 979 |
| 380-329 | 21-395 | LG 981 |
| 380-333 | 20-023 | LG 979 |
| 380-337 | 21-330 | LG 981 |
| 380-341 | 20-024 | LG 979 |
| 380-345 | 21-305 | |
| 380-349 | 20-025 | LG 979 |
| 380-410 | 21-180 | LG 981 |
| 380-422 | 22-195 | LG 980 |
| 380-426 | 22-105 | LG 980 |
| 380-428 | 21-195 | LG 981 |
| 380-436 | 21-105 | LG 981 |
| 380-444 | 21-131 | LG 981 |
| 380-455 | 22-130 | LG 980 |
| 380-459 | 22-595 | LG 980 |
| 380-463 | 22-505 | LG 980 |
| 380-467 | 22-530 | LG 980 |
| 380-469 | 21-595 | LG 981 |
| 380-477 | 21-505 | LG 981 |
| 380-485 | 21-530 | LG 981 |
| 380-511 | 22-280 | LG 980 |
| 380-512 | 22-295 | LG 980 |
| 380-524 | 22-330 | LG 980 |
| 380-531 | 22-180 | LG 980 |
| 380-541 | 22-580 | LG 980 |
| 380-625 | 21-355 | LG 981 |
| 380-635 | 21-155 | LG 981 |
| 380-641 | 21-580 | LG 981 |
| 380-645 | 21-555 | LG 981 |
| 380-695 | 19-005 | LG 983 |
| 380-773 | 22-205 | LG 980 |
| 380-777 | 22-380 | LG 980 |
| 380-781 | 22-395 | LG 980 |
| 380-785 | 22-305 | LG 980 |
| 380-801 | 69-171 | LG 981 |
| 380-811 | 21-980 | LG 981 |
| 380-812 | 21-995 | LG 981 |
| 380-821 | 21-480 | LG 981 |
| 380-831 | 21-880 | LG 981 |
| 380-832 | 21-895 | LG 981 |
| 380-833 | 21-805 | LG 981 |
| 380-842 | 21-095 | LG 981 |
| 380-843 | 21-005 | LG 981 |
| 380-844 | 21-030 | LG 981 |
| 385-070 | 55-336 | LG 986 |
| 385-074 | 55-349 | LG 986 |
| 385-100 | 55-741 | LG 1019 |
| 385-108 | 55-297 | LG 986 |
| 385-112 | 55-002-1 | LG 993 |
| 385-199 | 55-166 | |
| 385-204 | 15-302 | LG 271 |
| 385-204 | 55-302-1 | LG 992 |
| 385-272 | 55-286 | LG 992 |
| 385-284 | 55-294 | LG 986 |
| 385-288 | 55-265 | LG 986 |
| 385-427 | 55-984 | LG 991 |
| 385-429 | 55-053 | |
| 385-430 | 55-284 | LG 992 |
| 385-451 | 55-182 | LG 1023 |
| 385-505 | 55-804-1 | LG 994 |
| 385-563 | 55-971 | LG 988 |
| 385-567 | 55-996 | LG 988 |
| 385-571 | 55-973 | LG 988 |
| 385-575 | 55-972 | LG 988 |
| 385-637 | 55-743 | LG 988 |
| 385-637 | 55-821 | LG 988 |
| 385-641 | 55-807 | LG 994 |
| 385-649 | 55-816 | LG 988 |
| 385-698 | 55-406-0 | LG 995 |
| 385-730 | 55-140-0 | LG 989 |
| 385-738 | 55-145-1 | LG 989 |
| 385-752 | 55-147-1 | |
| 385-829 | 55-355-1 | LG 994 |
| 385-833 | 55-356-0 | LG 994 |
| 385-837 | 55-357-1 | LG 994 |
| 385-853 | 55-491 | LG 996 |
| 385-861 | 55-993 | LG 988 |
| 385-904 | 55-812 | LG 1022 |
| 385-906 | 55-803 | LG 1022 |
| 390-039 | 55-460-1 | LG 1026 |
| 390-223 | 55-106 | LG 773 |
| 390-294 | 05-072 | LG 1023 |
| 390-380 | 55-326 | LG 1021 |
| 395-004 | 41-922 | LG 1014 |
| 395-038 | 41-924 | LG 1014 |
| 395-046 | 41-925 | LG 1014 |
| 395-095 | 41-923 | LG 1014 |
| 395-129 | 41-921 | LG 1014 |
| 395-137 | 41-920 | LG 1014 |
| 395-202 | 41-923 | LG 1014 |
| 395-210 | 41-925 | LG 1014 |
| 395-329 | 41-933 | LG 1014 |
| 395-337 | 41-931 | LG 1014 |
| 395-345 | 41-937 | LG 1014 |
| 400-111 | 65-225 | LG 341 |
| 400-283 | 65-229 | LG 342 |
| 400-465 | 65-221 | LG 341 |
| 400-489 | 65-228 | LG 341 |
| 405-217 | 65-206 | LG 342 |
| 405-221 | 65-007 | LG 342 |
| 405-399 | 65-208 | LG 342 |
| 405-403 | 65-230 | LG 342 |
| 405-435 | 65-006 | LG 340 |
| 405-630 | 65-224 | LG 341 |
| 410-066 | 04-125 | LG 694 |
| 410-294 | 48-141 | LG 249 |
| 410-308 | 09-802 | LG 233 |
| 416-818 | 02-901 | LG 853 |
| 418-293 | 33-312 | LG 743 |
| 418-301 | 33-313 | LG 743 |
| 418-467 | 33-301 | LG 743 |
| 418-715 | 02-531 | |
| 420-026 | 73-351 | LG 843 |
| 420-046 | 73-560 | LG 844 |
| 420-046 | 73-561 | LG 843 |
| 420-111 | 73-819 | LG 843 |
| 420-179 | 73-564-0 | LG 843 |
| 425-033 | 47-050 | LG 744 |
| 425-041 | 47-080 | LG 744 |
| 425-058 | 47-120 | LG 744 |
| 425-066 | 47-160 | LG 744 |
| 425-074 | 47-200 | LG 744 |
| 425-116 | 47-689 | LG 743 |
| 425-124 | 47-014 | LG 743 |
| 425-181 | 47-038 | LG 743 |
| 425-215 | 47-081 | LG 744 |
| 425-223 | 47-121 | LG 744 |
| 425-231 | 47-161 | LG 744 |
| 425-249 | 47-201 | LG 744 |
| 425-264 | 47-051 | LG 744 |
| 425-272 | 33-070 | LG 742 |
| 425-306 | 33-038 | LG 742 |
| 425-350 | 33-500-0 | LG 744 |
| 425-504 | 33-035 | LG 742 |
| 425-508 | 33-034 | LG 742 |
| 425-512 | 33-033 | LG 742 |
| 425-520 | 33-032 | LG 742 |
| 425-524 | 33-031 | LG 742 |
| 430-009 | 42-008 | LG 945 |
| 430-013 | 33-395 | LG 943 |
| 430-013 | 33-396 | LG 944 |
| 430-017 | 33-207 | LG 949 |
| 430-029 | 33-024 | LG 945 |
| 430-066 | 33-206 | LG 949 |
| 430-070 | 33-388 | LG 943 |
| 430-110 | 33-398 | LG 944 |
| 430-116 | 33-240 | LG 948 |
| 430-128 | 33-377 | LG 943 |
| 430-144 | 33-391 | LG 945 |
| 430-161 | 33-392 | LG 944 |
| 430-165 | 33-021 | LG 950 |
| 430-173 | 33-397 | LG 942 |
| 430-249 | 33-393 | LG 943 |
| 430-300 | 33-317-0 | LG 729 |
| 430-386 | 33-256 | LG 946 |
| 430-401 | 33-002 | LG 946 |
| 430-401 | 33-082 | LG 946 |
| 430-405 | 33-015 | LG 948 |
| 430-409 | 33-027 | LG 947 |
| 430-445 | 33-376 | LG 942 |
| 430-461 | 33-090 | LG 948 |
| 430-492 | 33-089 | LG 946 |
| 430-504 | 33-390 | |
| 430-508 | 33-384 | LG 947 |
| 430-512 | 33-388 | LG 943 |
| 430-512 | 33-389 | LG 945 |
| 430-520 | 33-387 | LG 945 |
| 430-538 | 33-386 | LG 942 |
| 430-602 | 33-013 | LG 949 |
| 430-662 | 33-394 | LG 944 |
| 430-670 | 42-009 | LG 945 |
| 430-674 | 33-383 | LG 944 |
| 430-686 | 33-028 | LG 947 |
| 430-690 | 33-019 | LG 948 |
| 430-694 | 33-099 | LG 946 |
| 430-702 | 33-026 | LG 947 |
| 430-770 | 33-399 | LG 944 |
| 430-789 | 33-083 | LG 947 |
| 430-798 | 33-081 | LG 946 |
| 430-810 | 33-410 | LG 947 |
| 430-962 | 33-023 | LG 949 |
| 435-008 | 33-332 | LG 730 |
| 435-012 | 33-743 | LG 918 |
| 435-020 | 33-733 | LG 917 |
| 435-024 | 33-400 | LG 732 |
| 435-032 | 33-330 | LG 729 |
| 435-032 | 33-337 | LG 730 |
| 435-040 | 33-320-0 | LG 731 |
| 435-061 | 33-417 | LG 731 |
| 435-065 | 33-335 | LG 730 |
| 435-081 | 33-401 | LG 732 |
| 435-097 | 33-331 | LG 730 |
| 435-099 | 33-334 | LG 730 |
| 435-103 | 33-334 | LG 730 |
| 435-107 | 33-702 | LG 919 |
| 435-115 | 33-415 | LG 741 |
| 435-175 | 33-411 | LG 732 |
| 435-195 | 33-402 | LG 731 |
| 435-211 | 33-029-1 | LG 927 |
| 435-227 | 33-418 | LG 731 |
| 435-268 | 33-407 | LG 732 |
| 435-295 | 33-740 | LG 916 |
| 435-299 | 33-719 | LG 915 |
| 435-303 | 33-700 | LG 915 |
| 435-303 | 33-708 | LG 915 |
| 435-303 | 33-770 | LG 915 |
| 435-303 | 33-778 | LG 915 |
| 435-307 | 33-771 | LG 916 |
| 435-311 | 33-716 | LG 921 |
| 435-315 | 33-712 | LG 921 |
| 435-331 | 33-714 | LG 918 |
| 435-351 | 33-713 | LG 921 |
| 435-351 | 33-739 | LG 921 |
| 435-355 | 33-711 | LG 921 |
| 435-355 | 33-791 | LG 921 |
| 435-371 | 33-730 | LG 917 |
| 435-371 | 33-793 | LG 918 |
| 435-375 | 33-729 | LG 917 |
| 435-431 | 33-430 | LG 729 |
| 435-435 | 33-336 | LG 730 |
| 435-435 | 33-431 | LG 729 |
| 435-461 | 33-430 | LG 729 |
| 435-479 | 33-715 | LG 919 |
| 435-487 | 33-710 | LG 918 |
| 435-495 | 33-704 | LG 919 |
| 435-495 | 33-774 | LG 919 |
| 435-503 | 33-707 | LG 920 |
| 435-503 | 33-777 | LG 920 |
| 435-507 | 33-718 | LG 919 |
| 435-511 | 33-722 | LG 918 |
| 435-535 | 33-761 | LG 926 |
| 435-563 | 33-419 | LG 732 |
| 435-615 | 33-738 | LG 921 |
| 435-815 | 33-759-0 | LG 926 |
| 435-831 | 33-762-0 | LG 926 |
| 435-843 | 33-526 | LG 928 |
| 435-847 | 33-768-0 | LG 926 |
| 435-851 | 33-527 | LG 928 |
| 435-859 | 33-006 | LG 927 |
| 435-907 | 33-735 | LG 917 |
| 440-044 | 33-150 | LG 787 |
| 440-101 | 33-521 | LG 785 |
| 440-105 | 33-348 | LG 785 |
| 440-401 | 33-340 | LG 784 |
| 440-409 | 33-342 | LG 784 |

X

## STENS

| PART No. | OREGON | Page |
|---|---|---|
| 440-417 | 33-344 | LG 784 |
| 440-425 | 33-341 | LG 784 |
| 440-433 | 33-347 | LG 784 |
| 440-441 | 33-345 | LG 784 |
| 440-445 | 33-352-0 | LG 784 |
| 440-465 | 33-053 | LG 789 |
| 440-505 | 33-346 | LG 786 |
| 445-039 | 02-405 | LG 790 |
| 445-064 | 02-402 | LG 790 |
| 445-064 | 02-407 | LG 790 |
| 445-232 | 02-406 | LG 790 |
| 445-236 | 02-403 | LG 790 |
| 450-007 | 33-182-0 | LG 789 |
| 450-148 | 33-601 | LG 789 |
| 450-239 | 33-606 | LG 789 |
| 450-403 | 33-628 | LG 789 |
| 455-147 | 33-016 | LG 789 |
| 455-162 | 33-008 | LG 789 |
| 460-006 | 33-365 | LG 784 |
| 460-014 | 33-362 | LG 784 |
| 460-048 | 33-333 | LG 786 |
| 460-063 | 33-363 | LG 787 |
| 465-005 | 50-544 | LG 747 |
| 465-009 | 50-545 | LG 748 |
| 465-013 | 50-027 | LG 747 |
| 465-013 | 50-448 | LG 748 |
| 465-017 | 50-546 | LG 748 |
| 465-021 | 50-542 | LG 747 |
| 465-025 | 50-025-0 | LG 747 |
| 465-029 | 50-543 | LG 748 |
| 465-043 | 50-435 | LG 747 |
| 465-054 | 50-541 | LG 747 |
| 465-328 | 50-041 | LG 757 |
| 465-344 | 50-043 | LG 757 |
| 465-393 | 50-548 | LG 759 |
| 465-443 | 50-032 | LG 759 |
| 465-450 | 50-033 | LG 759 |
| 465-674 | 50-556 | LG 753 |
| 465-678 | 50-553 | LG 752 |
| 465-682 | 50-554 | LG 753 |
| 465-758 | 50-555 | LG 753 |
| 470-005 | 50-101 | LG 746 |
| 470-037 | 49-114 | LG 746 |
| 470-088 | 49-115 | LG 746 |
| 470-228 | 50-452 | LG 753 |
| 470-232 | 50-450 | LG 753 |
| 470-236 | 50-455 | LG 753 |
| 470-419 | 50-204 | LG 758 |
| 475-020 | 49-112 | LG 749 |
| 475-192 | 49-161 | LG 747 |
| 475-446 | 50-432 | LG 753 |
| 475-450 | 50-431 | LG 753 |
| 480-016 | 50-408 | LG 745 |
| 480-028 | 50-410 | LG 745 |
| 480-083 | 50-409 | LG 745 |
| 480-091 | 49-412 | LG 745 |
| 480-149 | 50-412 | LG 745 |
| 480-363 | 50-415 | LG 751 |
| 480-367 | 50-414 | LG 751 |
| 480-375 | 50-416 | LG 751 |
| 480-379 | 50-418 | LG 751 |
| 480-383 | 50-417 | LG 751 |
| 480-403 | 50-419 | LG 751 |
| 485-023 | 49-069 | LG 746 |
| 485-037 | 02-644-0 | LG 748 |
| 485-060 | 49-099 | LG 748 |
| 485-110 | 49-355 | LG 746 |
| 485-140 | 49-190 | LG 752 |
| 485-148 | 49-187 | LG 752 |
| 485-173 | 49-189 | LG 752 |
| 485-181 | 49-185 | LG 752 |
| 485-185 | 49-127 | LG 746 |
| 485-189 | 49-184 | LG 752 |
| 485-326 | 49-084 | LG 759 |
| 485-334 | 49-123 | LG 746 |
| 485-395 | 49-183 | LG 752 |
| 485-399 | 49-191 | LG 752 |
| 485-585 | 49-018 | LG 728 |
| 485-706 | 49-402 | LG 758 |
| 485-714 | 49-153 | LG 758 |
| 485-722 | 49-150 | LG 758 |
| 485-748 | 49-014 | LG 759 |
| 485-755 | 49-403 | LG 758 |
| 485-771 | 49-411 | LG 759 |
| 485-789 | 49-016 | LG 759 |
| 485-862 | 49-841 | LG 626 |
| 485-904 | 49-157 | LG 759 |
| 485-920 | 49-031 | LG 746 |
| 485-995 | 49-095 | LG 746 |
| 486-076 | 50-502 | LG 756 |
| 486-255 | 49-129 | LG 745 |
| 486-385 | 49-109 | LG 748 |
| 486-503 | 50-423 | LG 753 |
| 486-507 | 50-426 | LG 753 |
| 486-511 | 50-425 | LG 753 |
| 490-250 | 49-083 | LG 913 |
| 495-002 | 49-041-0 | LG 749 |
| 495-010 | 49-040-0 | LG 749 |
| 495-028 | 49-045 | LG 749 |
| 495-044 | 49-047 | LG 749 |
| 495-055 | 49-204 | LG 749 |
| 495-234 | 49-041-0 | LG 749 |
| 495-703 | 49-208 | LG 756 |
| 495-707 | 49-193 | LG 756 |
| 495-711 | 49-207 | LG 756 |
| 500-009 | 36-001 | |
| 500-074 | 36-005 | LG 750 |
| 500-229 | 36-043 | LG 754 |
| 500-233 | 36-044 | LG 754 |
| 500-241 | 36-045 | LG 754 |
| 500-245 | 36-046 | LG 754 |
| 500-645 | 36-022 | LG 750 |
| 510-016 | 36-101 | LG 750 |
| 510-032 | 36-100 | LG 750 |
| 510-040 | 36-103 | LG 750 |
| 510-057 | 36-102 | LG 750 |
| 510-065 | 36-104 | LG 750 |
| 510-510 | 36-141 | LG 755 |
| 510-514 | 36-142 | LG 755 |
| 510-518 | 36-143 | LG 755 |
| 515-390 | 49-054 | LG 632 |
| 515-454 | 36-244 | LG 754 |
| 515-458 | 36-245 | LG 754 |
| 515-462 | 36-246 | LG 754 |
| 515-786 | 36-535 | LG 755 |
| 515-790 | 36-531 | LG 755 |
| 520-015 | 49-101 | LG 602 |
| 520-035 | 49-225 | LG 604 |
| 520-049 | 49-693 | LG 602 |
| 520-072 | 49-071 | LG 602 |
| 520-080 | 49-070 | LG 604 |
| 520-106 | 49-008 | LG 623 |
| 520-114 | 49-029 | LG 609 |
| 520-164 | 49-102 | LG 602 |
| 520-175 | 49-007 | LG 622 |
| 520-213 | 49-101 | LG 602 |
| 520-213 | 49-401 | LG 605 |
| 520-239 | 49-133 | LG 609 |
| 520-247 | 49-229 | LG 609 |
| 520-304 | 49-201 | LG 608 |
| 520-312 | 49-239 | LG 609 |
| 520-336 | 49-230 | LG 609 |
| 520-338 | 49-840 | LG 609 |
| 520-350 | 49-700 | LG 605 |
| 520-516 | 49-305 | LG 603 |
| 520-522 | 49-078 | LG 603 |
| 520-526 | 49-149 | LG 604 |
| 520-590 | 07-700 | LG 767 |
| 520-630 | 49-989 | LG 602 |
| 520-702 | 50-673 | LG 597 |
| 520-718 | 50-670 | LG 597 |
| 520-722 | 50-638 | LG 596 |
| 520-722 | 50-668 | LG 597 |
| 520-726 | 50-634 | LG 597 |
| 520-730 | 50-669 | LG 597 |
| 520-734 | 49-915 | LG 597 |
| 520-738 | 50-637 | LG 597 |
| 520-902 | 49-242 | LG 624 |
| 520-902 | 50-640 | LG 598 |
| 520-906 | 50-664 | LG 600 |
| 520-922 | 50-646 | LG 598 |
| 525-030 | 49-077 | LG 628 |
| 525-063 | 49-033 | LG 628 |
| 525-200 | 49-363 | LG 624 |
| 525-204 | 49-039 | LG 629 |
| 525-212 | 49-025 | LG 629 |
| 525-212 | 49-916 | LG 629 |
| 525-265 | 49-916 | LG 629 |
| 525-281 | 49-209 | LG 625 |
| 525-291 | 49-210 | LG 628 |
| 525-303 | 49-035 | LG 629 |
| 525-329 | 53-005 | LG 632 |
| 525-390 | 49-054 | LG 632 |
| 525-414 | 49-913 | LG 624 |
| 525-422 | 49-995 | LG 625 |
| 525-422 | 49-999 | LG 626 |
| 525-554 | 49-997 | LG 628 |
| 525-638 | 49-914 | LG 165 |
| 525-691 | 49-912 | LG 624 |
| 525-691 | 49-992 | LG 624 |
| 525-699 | 49-996 | LG 629 |
| 525-806 | 49-308 | LG 625 |
| 525-808 | 49-307 | LG 625 |
| 525-816 | 49-009 | LG 625 |
| 525-840 | 49-036 | LG 628 |
| 525-899 | 49-214 | LG 624 |
| 525-901 | 49-038 | LG 628 |
| 527-111 | 49-304 | LG 603 |
| 527-705 | 49-300 | LG 626 |
| 530-006 | 49-004 | LG 622 |
| 530-014 | 49-003 | LG 622 |
| 530-018 | 49-001 | LG 622 |
| 530-030 | 49-006 | LG 622 |
| 530-048 | 49-005 | LG 622 |
| 530-055 | 49-213 | LG 623 |
| 530-204 | 49-002 | LG 623 |
| 530-228 | 49-037 | LG 622 |
| 600-223 | 33-243 | LG 786 |
| 600-227 | 33-244 | LG 786 |
| 6026 | 95-094 | LG 469 |
| 605-046 | 30-149 | LG 211 |
| 605-059 | 30-148 | LG 198 |
| 605-071 | 55-236 | LG 213 |
| 605-105 | 55-211 | LG 191 |
| 605-121 | 55-207 | LG 191 |
| 605-139 | 55-610 | LG 191 |
| 605-204 | 55-218 | LG 209 |
| 605-208 | 30-153 | LG 216 |
| 605-224 | 55-245 | LG 215 |
| 605-228 | 30-153 | LG 216 |
| 605-228 | 55-249 | LG 215 |
| 605-238 | 55-214 | LG 209 |
| 605-246 | 55-212 | LG 209 |
| 605-341 | 30-170 | LG 198 |
| 605-402 | 55-226 | LG 212 |
| 605-428 | 55-613 | LG 211 |
| 605-436 | 55-612 | LG 211 |
| 605-448 | 55-263 | LG 214 |
| 605-531 | 30-333 | LG 216 |
| 605-691 | 55-241 | LG 214 |
| 605-709 | 55-240 | LG 214 |
| 605-713 | 55-248 | LG 215 |
| 605-717 | 55-243 | LG 215 |
| 605-725 | 55-242 | LG 214 |
| 605-733 | 55-236 | LG 213 |
| 605-741 | 30-838 | LG 215 |
| 605-741 | 55-244 | LG 215 |
| 605-805 | 30-155 | LG 213 |
| 610-006 | 07-207 | LG 779 |
| 610-022 | 07-201 | LG 779 |
| 610-055 | 07-205 | LG 779 |
| 610-063 | 07-215 | LG 776 |
| 610-079 | 55-157 | LG 763 |
| 610-089 | 07-200 | LG 778 |
| 610-121 | 07-007 | LG 689 |
| 610-170 | 07-109 | LG 778 |
| 610-174 | 07-208 | LG 779 |
| 610-178 | 07-209 | LG 779 |
| 610-182 | 07-210 | LG 779 |
| 610-186 | 07-211 | LG 779 |
| 610-212 | 07-008 | LG 762 |
| 610-220 | 07-213 | LG 777 |
| 610-224 | 55-246 | LG 214 |
| 610-238 | 07-009 | LG 762 |
| 610-295 | 56-019 | LG 772 |
| 610-345 | 07-004 | LG 769 |
| 610-381 | 07-066 | LG 778 |
| 610-381 | 07-206 | LG 776 |
| 610-393 | 07-214 | LG 779 |
| 610-717 | 07-219 | LG 779 |
| 615-005 | 49-801 | LG 610 |
| 615-013 | 49-802 | LG 610 |
| 615-021 | 49-804 | LG 610 |
| 615-039 | 49-800 | LG 610 |

# 2019 Aftermarket X-Reference

## STENS

| PART No. | OREGON | Page |
|---|---|---|
| 615-047 | 50-607 | LG 595 |
| 615-054 | 49-827 | LG 608 |
| 615-058 | 49-833 | LG 611 |
| 615-078 | 49-898 | LG 618 |
| 615-082 | 49-285 | LG 617 |
| 615-082 | 49-891-0 | LG 617 |
| 615-086 | 49-440 | LG 618 |
| 615-090 | 49-857 | LG 619 |
| 615-094 | 49-894 | LG 619 |
| 615-098 | 49-884 | LG 619 |
| 615-102 | 49-859 | LG 616 |
| 615-104 | 49-803 | LG 610 |
| 615-108 | 49-883 | LG 618 |
| 615-112 | 49-805 | LG 609 |
| 615-120 | 49-825 | LG 606 |
| 615-128 | 50-619 | LG 595 |
| 615-132 | 50-620 | LG 595 |
| 615-211 | 49-021 | LG 629 |
| 615-215 | 49-282 | LG 619 |
| 615-223 | 50-603 | LG 595 |
| 615-227 | 49-904 | LG 614 |
| 615-229 | 49-023 | LG 629 |
| 615-237 | 49-834 | LG 611 |
| 615-241 | 49-880 | LG 617 |
| 615-245 | 49-816 | LG 612 |
| 615-253 | 49-903 | LG 615 |
| 615-269 | 49-881 | LG 618 |
| 615-277 | 49-855 | LG 617 |
| 615-286 | 49-810 | LG 612 |
| 615-290 | 49-908 | LG 614 |
| 615-294 | 49-902 | LG 614 |
| 615-356 | 49-897 | LG 617 |
| 615-360 | 49-822-0 | LG 616 |
| 615-360 | 49-865 | LG 616 |
| 615-362 | 49-819-0 | LG 615 |
| 615-362 | 49-861 | LG 615 |
| 615-364 | 49-866 | LG 617 |
| 615-366 | 49-818-0 | LG 615 |
| 615-368 | 49-856 | LG 619 |
| 615-370 | 49-817-0 | LG 616 |
| 615-370 | 49-864 | LG 616 |
| 615-374 | 49-437 | LG 614 |
| 615-378 | 49-286 | LG 615 |
| 615-378 | 49-901 | LG 615 |
| 615-382 | 50-621 | LG 595 |
| 615-390 | 49-287 | LG 620 |
| 615-401 | 49-835 | LG 611 |
| 615-405 | 49-807 | LG 611 |
| 615-419 | 49-806 | LG 611 |
| 615-423 | 49-906 | LG 615 |
| 615-435 | 49-809 | LG 613 |
| 615-441 | 49-441 | LG 618 |
| 615-443 | 49-812 | LG 612 |
| 615-463 | 49-831 | LG 612 |
| 615-466 | 49-854 | LG 615 |
| 615-488 | 49-442 | LG 619 |
| 615-500 | 55-342 | LG 627 |
| 615-504 | 49-438 | LG 615 |
| 615-546 | 49-873 | LG 612 |
| 615-550 | 49-875 | LG 612 |
| 615-554 | 49-877 | LG 613 |
| 615-562 | 49-281 | LG 613 |
| 615-570 | 49-832 | LG 611 |
| 615-582 | 49-853 | LG 611 |
| 615-641 | 55-342 | LG 627 |
| 615-674 | 53-006 | LG 632 |
| 615-690 | 55-333 | LG 633 |
| 615-706 | 49-288 | LG 619 |
| 615-736 | 49-026 | LG 769 |
| 615-740 | 49-020 | LG 631 |
| 615-740 | 49-026 | LG 769 |
| 615-744 | 49-027 | LG 769 |
| 615-748 | 55-187 | LG 631 |
| 615-752 | 55-188 | LG 631 |
| 615-756 | 55-189 | LG 631 |
| 615-764 | 49-088-0 | LG 631 |
| 615-776 | 49-283 | LG 616 |
| 615-776 | 49-887-0 | LG 616 |
| 615-780 | 49-284 | LG 617 |
| 615-780 | 49-888-0 | LG 617 |
| 615-788 | 49-444 | LG 630 |
| 615-792 | 49-028 | LG 769 |
| 615-796 | 49-443 | LG 630 |
| 615-827 | 49-836-0 | LG 616 |
| 615-831 | 49-829 | LG 605 |
| 615-839 | 49-823-0 | LG 618 |
| 615-839 | 49-867 | LG 618 |
| 615-843 | 49-863 | LG 616 |
| 615-852 | 49-847 | LG 610 |
| 615-854 | 49-839 | LG 613 |
| 615-856 | 49-852 | LG 611 |
| 615-860 | 49-844 | LG 612 |
| 615-864 | 49-849 | LG 610 |
| 615-870 | 49-882-0 | LG 613 |
| 615-873 | 49-316 | LG 613 |
| 625-541 | 43-694 | LG 936 |
| 625-541 | 43-699 | LG 936 |
| 625-616 | 43-540 | LG 936 |
| 625-620 | 43-562 | LG 936 |
| 630-103 | 31-092 | LG 931 |
| 635-052 | 56-011 | LG 687 |
| 635-110 | 56-001 | LG 687 |
| 635-177 | 04-008 | LG 686 |
| 635-178 | 04-008 | LG 686 |
| 635-243 | 56-002 | LG 687 |
| 635-293 | 04-009 | LG 686 |
| 635-300 | 04-006-0 | LG 686 |
| 6410 | 94-132 | LG 566 |
| 705-517 | 57-002 | LG 677 |
| 705-574 | 57-005 | LG 677 |
| 705-574 | 57-016 | LG 677 |
| 705-574 | 57-017 | LG 677 |
| 705-590 | 57-008 | LG 677 |
| 705-608 | 57-003 | LG 677 |
| 705-632 | 57-006 | LG 677 |
| 750-026 | 42-452 | LG 867 |
| 750-455 | 42-455 | LG 721 |
| 750-931 | 81-020 | LG 803 |
| 751-830 | 73-039 | LG 846 |
| 752-864 | 42-007 | LG 744 |
| 752-872 | 42-005 | LG 744 |
| 752-998 | 75-910 | LG 331 |
| 780-007 | 73-003 | LG 847 |
| 780-023 | 73-001 | LG 847 |
| 780-027 | 73-016 | LG 846 |
| 780-031 | 73-006 | LG 846 |
| 780-092 | 73-019 | LG 849 |
| 780-104 | 73-018 | LG 849 |
| 780-106 | 73-014 | LG 849 |
| 780-110 | 73-017 | LG 848 |
| 780-114 | 73-008 | LG 848 |
| 780-122 | 73-013 | LG 849 |
| 780-180 | 73-046 | LG 847 |
| 780-188 | 73-023 | LG 847 |
| 780-205 | 80-740 | LG 852 |
| 780-213 | 80-741 | LG 852 |
| 780-221 | 80-742 | LG 852 |
| 780-226 | 80-017 | LG 852 |
| 780-233 | 80-743 | LG 852 |
| 780-237 | 80-746 | LG 852 |
| 780-241 | 80-749 | LG 853 |
| 780-257 | 73-059 | LG 850 |
| 780-266 | 73-029 | LG 847 |
| 780-282 | 73-028 | LG 850 |
| 780-282 | 73-100 | LG 850 |
| 780-299 | 80-747 | LG 852 |
| 780-320 | 73-036 | LG 849 |
| 780-324 | 73-037 | LG 847 |
| 780-412 | 73-027 | LG 850 |
| 780-416 | 73-020 | LG 850 |
| 780-420 | 73-031 | LG 850 |
| 780-420 | 73-826 | |
| 780-424 | 73-054 | LG 848 |
| 780-428 | 73-057 | LG 848 |
| 780-432 | 73-058 | LG 848 |
| 780-436 | 73-055 | LG 848 |
| 780-888 | 73-053 | LG 850 |
| 780-892 | 73-052 | LG 850 |
| 785-725 | 75-902 | LG 331 |
| 890-200 | 55-185 | LG 1027 |
| 890-244 | 55-994 | LG 988 |
| 890-244 | 55-995 | |

## SUNBELT

| PART No. | OREGON | Page |
|---|---|---|
| B1073974 | 40-140 | LG 584 |
| B1112362 | 40-141 | LG 585 |
| B1112363 | 40-139 | LG 584 |
| B160011 | 33-317-0 | LG 729 |
| B1AC152 | 33-335 | LG 730 |
| B1AR1020 | 91-005 | LG 458 |
| B1BB101 | 41-925 | LG 1014 |
| B1BB102 | 41-923 | LG 1014 |
| B1BB113 | 41-920 | LG 1014 |
| B1BC1200 | 93-005 | LG 447 |
| B1BC1201 | 93-005 | LG 447 |
| B1BC1202 | 93-006 | LG 444 |
| B1BC1203 | 93-008 | LG 510 |
| B1BC1204 | 93-009 | LG 476 |
| B1BC1205 | 93-010 | LG 432 |
| B1BC1206 | 93-011 | LG 557 |
| B1BU1300 | 91-256 | LG 437 |
| B1CC1400 | 91-414 | LG 405 |
| B1CC1401 | 91-333 | LG 406 |
| B1CC1402 | 91-330 | LG 513 |
| B1CC1403 | 92-015 | LG 407 |
| B1CC1404 | 91-329 | LG 409 |
| B1CC1405 | 91-332 | LG 412 |
| B1CC1407 | 91-415 | LG 406 |
| B1CC1410 | 91-440 | LG 408 |
| B1CC1412 | 91-327 | LG 404 |
| B1CC1413 | 98-091 | LG 516 |
| B1CC1418 | 98-071 | LG 411 |
| B1CC1419 | 98-087 | LG 407 |
| B1CC1421 | 91-144 | LG 454 |
| B1CC1423 | 198-086 | LG 565 |
| B1CC1425 | 91-058 | LG 411 |
| B1CC1427 | 98-072 | LG 408 |
| B1CC1428 | 91-938 | LG 514 |
| B1CO128 | 89-001 | LG 590 |
| B1DC1500 | 91-502 | LG 477 |
| B1DC1501 | 91-506 | LG 473 |
| B1DC1502 | 91-502 | LG 477 |
| B1DC1503 | 91-503 | LG 424 |
| B1DC1506 | 91-509 | LG 424 |
| B1DC1507 | 91-515 | LG 415 |
| B1DC1510 | 91-507 | LG 415 |
| B1DC1511 | 91-508 | LG 419 |
| B1DX1602 | 91-167 | LG 416 |
| B1EM1800 | 91-311 | LG 439 |
| B1EM1802 | 91-312 | LG 478 |
| B1EM1803 | 91-135 | LG 387 |
| B1EM1810 | 91-335 | LG 420 |
| B1EM1815 | 91-368 | LG 460 |
| B1EM1816 | 91-373 | LG 383 |
| B1EM1817 | 91-369 | LG 434 |
| B1EM1850 | 91-374 | LG 442 |
| B1EM1870 | 492-726 | LG 436 |
| B1EM1878 | 392-203 | LG 442 |
| B1EM1880 | 92-031 | LG 433 |
| B1EM1890 | 92-026 | LG 435 |
| B1EM1891 | 92-027 | LG 432 |
| B1EM1892 | 92-028 | LG 433 |
| B1EP1001 | 95-014 | LG 374 |
| B1EP1003 | 95-015 | LG 400 |
| B1EP1004 | 95-024 | LG 465 |
| B1EP1005 | 95-023 | LG 380 |
| B1EP1006 | 95-031 | LG 377 |
| B1EP1007 | 95-034 | LG 377 |
| B1EP1008 | 95-036 | LG 463 |
| B1EP1009 | 195-033 | LG 400 |
| B1EP1010 | 195-032 | LG 425 |
| B1EP1011 | 195-005 | LG 373 |
| B1EP1012 | 195-003 | LG 400 |
| B1EP1013 | 95-027 | LG 398 |
| B1EP1014 | 95-018 | LG 399 |
| B1EP1015 | 95-006 | LG 397 |
| B1EP1016 | 95-038 | LG 523 |
| B1EP1018 | 95-051 | LG 465 |
| B1EP1019 | 195-021 | LG 468 |
| B1EP1021 | 95-049 | LG 459 |
| B1EP1022 | 95-050 | LG 461 |
| B1EP1023 | 195-019 | LG 466 |
| B1EP1025 | 95-044 | LG 465 |
| B1EP1026 | 95-052 | LG 398 |
| B1EP1027 | 95-045 | LG 374 |
| B1EP1029 | 95-057 | LG 380 |
| B1EP1031 | 95-045 | LG 374 |
| B1EP1035 | 195-062 | LG 376 |
| B1EP1040 | 95-068 | LG 376 |
| B1EP1050 | 195-072 | LG 530 |
| B1GH1900 | 91-558 | LG 448 |
| B1GH1901 | 91-532 | LG 448 |
| B1GH1902 | 91-547 | LG 449 |

X

## SUNBELT

| PART No. | OREGON | Page |
|---|---|---|
| B1GH1903 | 91-128 | LG 424 |
| B1GH1904 | 91-531 | LG 393 |
| B1GH1905 | 91-534 | LG 578 |
| B1GH1906 | 91-535 | LG 448 |
| B1GH1908 | 91-536 | LG 395 |
| B1GR2001 | 91-253 | LG 415 |
| B1GR2002 | 91-244 | LG 450 |
| B1HN2100 | 91-291 | LG 457 |
| B1HS1001 | 90-205 | LG 501 |
| B1HS1002 | 90-206 | LG 414 |
| B1HS1003 | 90-207 | LG 472 |
| B1HS1004 | 90-208 | LG 502 |
| B1HS1005 | 92-038 | LG 392 |
| B1HS1009 | 91-308 | LG 467 |
| B1HS1010 | 92-037 | LG 423 |
| B1HS1011 | 92-045 | LG 474 |
| B1HV1013 | 95-058 | LG 458 |
| B1HV1016 | 99-127 | LG 375 |
| B1HV1017 | 195-070 | LG 469 |
| B1JD1038 | 92-118 | LG 488 |
| B1JD1039 | 91-138 | LG 488 |
| B1JD1040 | 91-078 | LG 490 |
| B1JD1042 | 91-138 | LG 488 |
| B1JD1043 | 96-354 | LG 484 |
| B1JD1044 | 90-348 | LG 484 |
| B1JD1046 | 92-119 | LG 492 |
| B1JD1047 | 91-395 | LG 493 |
| B1JD1049 | 90-309 | LG 492 |
| B1JD1051 | 91-079 | LG 485 |
| B1JD1052 | 90-354 | LG 488 |
| B1JD1091 | 92-110 | LG 491 |
| B1JD1092 | 92-113 | LG 490 |
| B1JD5000 | 91-389 | LG 538 |
| B1JD5003 | 91-380 | LG 538 |
| B1JD5004 | 91-384 | LG 487 |
| B1JD5006 | 91-381 | LG 483 |
| B1JD5007 | 91-443 | LG 489 |
| B1JD5008 | 91-394 | LG 489 |
| B1JD5009 | 91-383 | LG 484 |
| B1JD5011 | 91-393 | LG 485 |
| B1JD5015 | 91-403 | LG 488 |
| B1JD5016 | 91-398 | LG 488 |
| B1JD5101 | 191-392 | LG 488 |
| B1JD5105 | 91-400 | LG 488 |
| B1JD6012 | 91-448 | LG 482 |
| B1JD6013 | 91-449 | LG 492 |
| B1JD6014 | 191-108 | LG 484 |
| B1JD6015 | 191-139 | LG 491 |
| B1JD6016 | 192-106 | LG 491 |
| B1JD6017 | 92-104 | LG 485 |
| B1JD6018 | 92-114 | LG 493 |
| B1JD6019 | 92-103 | LG 487 |
| B1KU1020 | 91-433 | LG 498 |
| B1KU1021 | 91-438 | LG 500 |
| B1KU1022 | 91-436 | LG 498 |
| B1KU1024 | 92-049 | LG 500 |
| B1KU1025 | 92-116 | LG 500 |
| B1LB2300 | 92-011 | LG 490 |
| B1MA2400 | 98-019 | LG 516 |
| B1MA2401 | 98-487 | LG 513 |
| B1MA2402 | 198-063 | LG 513 |
| B1MA2404 | 98-044 | LG 409 |
| B1MA2406 | 98-499 | LG 519 |
| B1MA2407 | 98-537 | LG 516 |
| B1MA2409 | 98-007 | LG 401 |
| B1MA2410 | 98-496 | LG 515 |
| B1MA2411 | 98-057 | LG 513 |
| B1MA2412 | 98-056 | LG 512 |
| B1MA2413 | 198-058 | LG 517 |
| B1MA2414 | 198-059 | LG 403 |
| B1MA2415 | 198-052 | LG 389 |
| B1MA2416 | 198-153 | LG 520 |
| B1MA2417 | 198-049 | LG 518 |
| B1MA2418 | 98-050 | LG 521 |
| B1MA2420 | 98-005 | LG 521 |
| B1MA2421 | 98-051 | LG 521 |
| B1MA2423 | 98-068 | LG 389 |
| B1MA2424 | 98-069 | LG 404 |
| B1MA2425 | 98-054 | LG 574 |
| B1MA2428 | 98-002 | LG 401 |
| B1MA2430 | 98-066 | LG 409 |
| B1MA2431 | 98-061 | LG 404 |
| B1MA2432 | 98-064-1 | LG 514 |
| B1MAX122525 | 41-932 | LG 1014 |
| B1MU2600 | 97-105 | LG 523 |
| B1MU2601 | 97-015 | LG 527 |
| B1MU2602 | 96-005 | |
| B1MU2604 | 97-107 | LG 524 |
| B1MU2605 | 97-105 | LG 523 |
| B1MU2608 | 97-330 | LG 528 |
| B1MU2609 | 97-109 | LG 525 |
| B1MU2610 | 97-010 | LG 524 |
| B1MU2611 | 97-006 | LG 525 |
| B1MU2612 | 97-123 | LG 537 |
| B1MU2613 | 97-118 | LG 524 |
| B1MU2615 | 97-005 | LG 527 |
| B1MU2616 | 97-004 | |
| B1MU2617 | 97-003 | |
| B1MU2619 | 97-008 | LG 526 |
| B1MU2620 | 97-014 | LG 527 |
| B1MU2621 | 97-001 | LG 527 |
| B1MU2623 | 97-017 | LG 537 |
| B1MU2628 | 97-013 | LG 526 |
| B1MU2629 | 97-012 | LG 537 |
| B1MU2631 | 97-119 | LG 525 |
| B1MU2632 | 97-018 | LG 523 |
| B1MU2634 | 97-024 | LG 525 |
| B1MU2637 | 97-021 | LG 524 |
| B1PD1014 | 95-602 | LG 403 |
| B1PD1022 | 96-346 | LG 449 |
| B1PD1023 | 96-394 | LG 538 |
| B1PD1024 | 96-332 | LG 484 |
| B1PD1028 | 98-600 | LG 85 |
| B1PD1030 | 96-620 | LG 551 |
| B1PD1031 | 94-618 | LG 506 |
| B1PD1038 | 396-770 | LG 485 |
| B1PD1039 | 96-364 | LG 488 |
| B1PD1044 | 92-675 | LG 484 |
| B1PD1045 | 92-676 | LG 491 |
| B1PD1054 | 396-719 | LG 488 |
| B1PD1062 | 396-738 | LG 485 |
| B1PD1063 | 396-734 | LG 489 |
| B1PD1065 | 396-775 | LG 493 |
| B1PD1068 | 396-771 | LG 492 |
| B1PD1072 | 95-601 | LG 423 |
| B1PD1073 | 96-900 | LG 526 |
| B1PD1074 | 96-615 | LG 461 |
| B1PD1095 | 98-629 | LG 412 |
| B1PD2000 | 97-606 | LG 522 |
| B1PD2001 | 597-602 | LG 524 |
| B1PD2002 | 97-604 | LG 525 |
| B1PD2007 | 96-323 | LG 477 |
| B1PD2015 | 96-341 | LG 446 |
| B1PD2037 | 96-628 | LG 528 |
| B1PD2038 | 96-630 | LG 556 |
| B1PD2039 | 96-633 | LG 556 |
| B1PD5003 | 97-601 | LG 527 |
| B1PD5005 | 96-310 | LG 444 |
| B1PD5006 | 96-308 | LG 456 |
| B1PD5008 | 96-344 | LG 536 |
| B1PD5009 | 96-319 | LG 415 |
| B1PD5010 | 396-702 | LG 480 |
| B1PD5010 | 96-702 | LG 491 |
| B1PD5016 | 92-615 | LG 491 |
| B1PD5017 | 92-616 | LG 485 |
| B1PD5018 | 396-743 | LG 493 |
| B1PD5023 | 96-394 | LG 538 |
| B1PD5024 | 96-618 | LG 483 |
| B1PD5026 | 96-306 | LG 538 |
| B1PD5039 | 96-364 | LG 488 |
| B1PD5041 | 396-730 | LG 490 |
| B1PD5044 | 92-675 | LG 484 |
| B1PD5045 | 92-676 | LG 491 |
| B1PD5051 | 94-615 | LG 370 |
| B1PD5054 | 396-719 | LG 488 |
| B1PD5063 | 396-734 | LG 489 |
| B1PD5068 | 396-771 | LG 492 |
| B1PD5073 | 96-900 | LG 526 |
| B1PD5125 | 396-352 | LG 489 |
| B1PD5138 | 396-770 | LG 485 |
| B1PD5144 | 96-346 | LG 449 |
| B1PD5145 | 596-808 | LG 472 |
| B1PD5146 | 92-617 | LG 487 |
| B1PD5147 | 96-372 | LG 500 |
| B1PD5148 | 96-363 | LG 499 |
| B1PD5206 | 396-702 | LG 480 |
| B1SB10066 | 97-022 | LG 524 |
| B1SB10071 | 91-256 | LG 437 |
| B1SB10636 | 91-073 | LG 512 |
| B1SB10928 | 94-051 | LG 570 |
| B1SB1100 | 91-500 | LG 416 |
| B1SB11229 | 92-033 | LG 442 |
| B1SB11231 | 92-029 | LG 435 |
| B1SB11244 | 92-084 | LG 442 |
| B1SB11267 | 96-322 | LG 567 |
| B1SB11279 | 96-321 | LG 436 |
| B1SB1137 | 40-408 | LG 589 |
| B1SB1138 | 40-402 | LG 589 |
| B1SB1139 | 40-411 | LG 589 |
| B1SB1143 | 40-403 | LG 589 |
| B1SB11469 | 96-749 | LG 433 |
| B1SB1147 | 40-807 | LG 585 |
| B1SB1148 | 40-409 | LG 585 |
| B1SB11495 | 92-030 | LG 567 |
| B1SB11821 | 94-068 | LG 441 |
| B1SB12122 | 95-084 | LG 494 |
| B1SB12123 | 95-087 | LG 460 |
| B1SB12124 | 95-085 | LG 462 |
| B1SB12125 | 95-086 | LG 425 |
| B1SB1927 | 33-320-0 | LG 731 |
| B1SB2012 | 97-016 | LG 524 |
| B1SB2078 | 91-714 | LG 543 |
| B1SB2120 | 91-391 | LG 489 |
| B1SB2148 | 40-316 | LG 586 |
| B1SB2658 | 40-843 | LG 588 |
| B1SB2661 | 40-845 | LG 588 |
| B1SB2669 | 40-132 | LG 586 |
| B1SB2670 | 40-131 | LG 586 |
| B1SB2671 | 40-130 | LG 586 |
| B1SB2672 | 40-130 | LG 586 |
| B1SB2673 | 40-503 | LG 589 |
| B1SB2690 | 95-011 | |
| B1SB3329 | 93-025 | LG 482 |
| B1SB3346 | 91-342 | LG 447 |
| B1SB3356 | 98-037 | LG 574 |
| B1SB3377 | 91-557 | LG 545 |
| B1SB3386 | 91-430 | LG 497 |
| B1SB3390 | 97-110 | LG 525 |
| B1SB3393 | 94-039 | LG 561 |
| B1SB3395 | 94-038 | LG 568 |
| B1SB3423 | 91-911 | LG 576 |
| B1SB3424 | 91-539 | LG 393 |
| B1SB3469 | 91-352 | LG 482 |
| B1SB6019 | 98-486 | LG 512 |
| B1SB6020 | 91-501 | LG 413 |
| B1SB6035 | 91-123 | LG 395 |
| B1SB6046 | 90-622 | LG 368 |
| B1SB6060 | 91-003 | LG 370 |
| B1SB6061 | 91-003 | LG 370 |
| B1SB6066 | 91-097 | LG 388 |
| B1SB6068 | 91-096 | LG 389 |
| B1SB6088 | 91-508 | LG 419 |
| B1SB6171 | 91-254 | LG 456 |
| B1SB6172 | 40-121 | LG 584 |
| B1SB6173 | 91-417 | LG 500 |
| B1SB6178 | 91-218 | LG 420 |
| B1SB6185 | 91-126 | LG 548 |
| B1SB6194 | 91-253 | LG 415 |
| B1SB6210 | 91-764 | LG 579 |
| B1SB6216 | 91-188 | LG 439 |
| B1SB6217 | 91-170 | LG 437 |
| B1SB6254 | 191-015 | LG 372 |
| B1SB6256 | 94-127 | LG 569 |
| B1SB6271 | 94-040 | LG 573 |
| B1SB6272 | 93-013 | LG 480 |
| B1SB6276 | 40-840 | LG 588 |
| B1SB6279 | 40-703 | LG 590 |
| B1SB6285 | 91-239 | LG 454 |
| B1SB6327 | 91-399 | LG 493 |
| B1SB6328 | 91-399 | LG 493 |
| B1SB6401 | 91-547 | LG 449 |
| B1SB6402 | 91-544 | LG 397 |
| B1SB6403 | 91-533 | LG 394 |
| B1SB6430 | 91-517 | LG 457 |
| B1SB6431 | 91-516 | LG 457 |
| B1SB6434 | 91-766 | LG 579 |
| B1SB6448 | 98-065 | LG 515 |
| B1SB6467 | 91-762 | LG 578 |
| B1SB6762 | 40-951 | LG 587 |
| B1SB7934 | 33-337 | LG 730 |
| B1SB847 | 91-399 | LG 493 |
| B1SB851 | 91-804 | LG 560 |
| B1SB9171 | 91-503 | LG 424 |
| B1SB9988 | 91-368 | LG 460 |

# 2019 Aftermarket X-Reference

## SUNBELT

| PART No. | OREGON | Page |
|---|---|---|
| B1SC2800 | 91-620 | LG 470 |
| B1SC2801 | 91-622 | LG 536 |
| B1SC2802 | 91-626 | LG 552 |
| B1SC2803 | 91-623 | LG 485 |
| B1SC2804 | 91-621 | LG 563 |
| B1SC2806 | 91-627 | LG 482 |
| B1SC2807 | 91-628 | LG 387 |
| B1SC3800 | 91-621 | LG 563 |
| B1SC3801 | 91-637 | LG 507 |
| B1SC3802 | 91-638 | LG 426 |
| B1SN3001 | 99-117 | LG 556 |
| B1SN3003 | 99-112 | LG 556 |
| B1SN3004 | 99-114 | LG 555 |
| B1SN3006 | 99-103 | LG 551 |
| B1SN3007 | 99-107 | LG 551 |
| B1SN3011 | 99-121 | LG 551 |
| B1SP2900 | 91-713 | LG 422 |
| B1SP2902 | 91-723 | LG 508 |
| B1SP2903 | 91-701 | LG 545 |
| B1SP2904 | 91-705 | LG 540 |
| B1SP2905 | 91-706 | LG 550 |
| B1TR3100 | 94-017 | LG 441 |
| B1TR3101 | 94-018 | LG 565 |
| B1TR3102 | 94-011 | LG 572 |
| B1TR3103 | 94-022 | LG 565 |
| B1TR3104 | 94-032 | LG 568 |
| B1TR3105 | 94-061 | LG 561 |
| B1TR3106 | 94-019 | LG 570 |
| B1TR3107 | 94-029 | LG 414 |
| B1TR3108 | 91-805 | LG 560 |
| B1TR3109 | 91-806 | LG 447 |
| B1TR3110 | 94-021 | LG 573 |
| B1TR3111 | 94-026 | LG 369 |
| B1TR3115 | 94-322 | LG 520 |
| B1UN3200 | 90-620 | LG 368 |
| B1UN3201 | 90-621 | LG 368 |
| B1UN3202 | 90-146 | LG 368 |
| B1UN3203 | 90-143 | LG 368 |
| B1UN3204 | 90-144 | LG 368 |
| B1UN3205 | 90-145 | LG 368 |
| B1UN3206 | 90-146 | LG 368 |
| B1WA3400 | 91-912 | LG 576 |
| B1WA3401 | 91-913 | LG 576 |
| B1WA3402 | 91-919 | LG 576 |
| B1WA3403 | 91-920 | LG 576 |
| B1WD3500 | 91-761 | LG 578 |

## TRACTOR SUPPLY

| PART No. | OREGON | Page |
|---|---|---|
| 1000765 | 93-005 | LG 447 |
| 1009968 | 98-093 | LG 411 |
| 1009976 | 98-090 | LG 519 |
| 1010765 | 92-615 | LG 491 |
| 4415029 | 98-499 | LG 519 |
| 4415249 | 198-049 | LG 518 |
| 4415346 | 198-058 | LG 517 |
| 4415354 | 198-059 | LG 403 |
| 4415370 | 98-051 | LG 521 |
| 4421363 | 91-050 | LG 559 |
| 4425309 | 98-072 | LG 408 |
| 4429824 | 98-090 | LG 519 |
| 4435388 | 91-506 | LG 473 |
| 4435613 | 195-072 | LG 530 |
| 4435647 | 97-001 | LG 527 |
| 4441232 | 198-049 | LG 518 |
| 4441258 | 98-050 | LG 521 |
| 4441290 | 98-050 | LG 521 |
| 4441957 | 95-051 | LG 465 |
| 4441999 | 97-024 | LG 525 |
| 4442238 | 195-003 | LG 400 |
| 4442246 | 95-045 | LG 374 |
| 4442254 | 95-068 | LG 376 |
| 4442262 | 95-018 | LG 399 |
| 4442296 | 92-015 | LG 407 |
| 4442301 | 195-062 | LG 376 |
| 4442327 | 91-440 | LG 408 |
| 4442432 | 198-059 | LG 403 |
| 4442547 | 98-072 | LG 408 |
| 4445008 | 191-392 | LG 488 |
| 4445016 | 91-389 | LG 538 |
| 4445024 | 91-380 | LG 538 |
| 4445032 | 191-139 | LG 491 |
| 4445040 | 191-108 | LG 484 |
| 4445058 | 195-005 | LG 373 |
| 4445066 | 195-032 | LG 425 |
| 4445074 | 195-021 | LG 468 |
| 4445082 | 95-052 | LG 398 |
| 4445090 | 195-033 | LG 400 |
| 4445105 | 195-067 | LG 380 |
| 4445113 | 198-086 | LG 565 |
| 4445171 | 98-087 | LG 407 |
| 4452039 | 91-057 | LG 409 |
| 4452144 | 91-058 | LG 411 |
| 4452178 | 198-049 | LG 518 |
| 4454277 | 69-262-0 | |
| 4457102 | 98-095 | LG 521 |
| 4457110 | 98-096 | LG 404 |
| 490-110-0038 | 95-045 | LG 374 |
| 60-7118-6 | 198-059 | LG 403 |

X

OREGON®

# Numerical & Alphabetical Indexes

# 2019 Numerical Index

| OREGON | Page | Code | Pk. |
|---|---|---|---|
| 02-002 | SFS 100 | X | 10 |
| 02-006 | SFS 100 | X | 10 |
| 02-007 | SFS 100 | X | 10 |
| 02-008 | SFS 100 | X | 10 |
| 02-009 | SFS 100 | X | 10 |
| 02-010-1 | SFS 101 | X | 10 |
| 02-011-1 | SFS 101 | X | 10 |
| 02-015-1 | SFS 101 | X | 10 |
| 02-017 | LG 742 | X | 1 |
| 02-020 | | X | 10 |
| 02-034 | | X | 1 |
| 02-035 | LG 368 | X | 1 |
| 02-040 | LG 765 | X | 10 |
| 02-041 | LG 765 | X | 10 |
| 02-050-0 | SFS 105 | X | 10 |
| 02-098 | LG 722 | X | 10 |
| 02-099 | LG 722 | X | 10 |
| 02-100-0 | | X | 10 |
| 02-101 | LG 721 | X | 10 |
| 02-103 | LG 722 | X | 10 |
| 02-106 | LG 723 | X | 10 |
| 02-107 | LG 723 | X | 10 |
| 02-108 | LG 723 | X | 10 |
| 02-111 | LG 723 | X | 10 |
| 02-115 | LG 723 | X | 10 |
| 02-136 | LG 686 | N | 1 |
| 02-137 | LG 686 | N | 1 |
| 02-138 | LG 686 | N | 1 |
| 02-139 | LG 686 | N | 1 |
| 02-168 | SFS 106 | X | 10 |
| 02-175 | LG 676 | X | 10 |
| 02-176 | LG 676 | X | 10 |
| 02-177 | LG 676 | X | 10 |
| 02-178 | LG 676 | X | 10 |
| 02-179 | LG 676 | X | 10 |
| 02-180 | LG 676 | X | 10 |
| 02-181 | LG 676 | X | 10 |
| 02-182 | LG 676 | X | 10 |
| 02-184 | LG 676 | X | 10 |
| 02-187 | LG 676 | X | 10 |
| 02-188 | LG 676 | X | 10 |
| 02-190 | LG 676 | X | 10 |
| 02-191 | LG 676 | X | 10 |
| 02-192 | LG 676 | X | 10 |
| 02-193 | LG 676 | X | 10 |
| 02-194 | LG 676 | X | 10 |
| 02-195 | LG 676 | X | 10 |
| 02-196 | LG 676 | X | 10 |
| 02-209 | SFS 100 | X | 10 |
| 02-216 | SFS 100 | X | 10 |
| 02-217 | SFS 100 | X | 10 |
| 02-220 | SFS 100 | X | 10 |
| 02-301 | SFS 105 | X | 10 |
| 02-304 | SFS 105 | X | 10 |
| 02-325 | SFS 102 | X | 10 |
| 02-327 | SFS 102 | X | 10 |
| 02-401 | LG 790 | X | 10 |
| 02-402 | LG 790 | X | 10 |
| 02-403 | LG 790 | X | 10 |
| 02-404 | LG 790 | X | 10 |
| 02-405 | LG 790 | X | 10 |
| 02-406 | LG 790 | X | 10 |
| 02-407 | LG 790 | X | 10 |
| 02-411 | SFS 100 | X | 10 |
| 02-414 | SFS 100 | X | 10 |
| 02-416 | | X | 10 |
| 02-417 | SFS 100 | X | 10 |
| 02-419 | SFS 100 | X | 10 |
| 02-424 | SFS 100 | X | 10 |
| 02-432 | SFS 100 | X | 10 |
| 02-442 | LG 803 | X | 1 |

| OREGON | Page | Code | Pk. |
|---|---|---|---|
| 02-443 | SFS 104 | X | 10 |
| 02-444 | SFS 104 | X | 10 |
| 02-445 | SFS 104 | X | 10 |
| 02-446 | SFS 104 | X | 10 |
| 02-486 | SFS 103 | X | 10 |
| 02-490 | SFS 103 | X | 10 |
| 02-509 | SFS 101 | X | 10 |
| 02-531 | | X | 10 |
| 02-535 | | X | 10 |
| 02-635 | SFS 102 | X | 10 |
| 02-640 | SFS 102 | X | 10 |
| 02-644-0 | LG 748 | X | 10 |
| 02-648 | SFS 102 | X | 10 |
| 02-700 | LG 765 | X | 10 |
| 02-701 | LG 765 | X | 10 |
| 02-860 | LG 766 | X | 10 |
| 02-861 | LG 766 | X | 10 |
| 02-901 | LG 853 | X | 10 |
| 03-100 | LG 796 | X | 1 |
| 03-101 | LG 794 | X | 1 |
| 03-102 | LG 795 | X | 10 |
| 03-103 | LG 794 | X | 1 |
| 03-104 | LG 794 | X | 1 |
| 03-105 | LG 794 | X | 10 |
| 03-106 | LG 795 | X | 10 |
| 03-107 | LG 795 | X | 1 |
| 03-108 | LG 795 | X | 10 |
| 03-109 | LG 795 | X | 1 |
| 03-110 | LG 795 | X | 10 |
| 03-111 | LG 794 | X | 10 |
| 03-112 | LG 796 | X | 1 |
| 03-113 | LG 796 | X | 1 |
| 03-114 | LG 795 | X | 1 |
| 03-115 | LG 794 | X | 1 |
| 03-116 | LG 795 | X | 1 |
| 03-117 | LG 795 | X | 1 |
| 03-118 | LG 795 | X | 1 |
| 03-119 | LG 796 | X | 1 |
| 03-120 | LG 794 | X | 1 |
| 03-121 | LG 796 | X | 1 |
| 03-122 | LG 795 | X | 1 |
| 03-123 | LG 796 | X | 1 |
| 03-124 | LG 794 | X | 1 |
| 03-125 | LG 795 | X | 1 |
| 03-126 | LG 795 | X | 1 |
| 03-127 | LG 794 | X | 1 |
| 03-128 | LG 793 | X | 1 |
| 03-129 | LG 793 | X | 1 |
| 03-130 | LG 796 | X | 1 |
| 03-131 | LG 795 | X | 1 |
| 03-132 | LG 795 | X | 1 |
| 03-133 | LG 793 | X | 1 |
| 03-134 | LG 796 | X | 1 |
| 03-135 | LG 793 | X | 1 |
| 03-136 | LG 793 | X | 1 |
| 03-137 | LG 794 | X | 1 |
| 03-138 | LG 795 | X | 1 |
| 03-139 | LG 796 | X | 1 |
| 03-140 | LG 795 | X | 1 |
| 03-141 | LG 793 | X | 1 |
| 03-142 | LG 794 | X | 1 |
| 03-143 | LG 794 | X | 1 |
| 03-144 | LG 796 | X | 1 |
| 03-145 | LG 793 | X | 1 |
| 03-146 | LG 794 | X | 1 |
| 03-147 | LG 793 | X | 1 |
| 03-148 | LG 793 | X | 1 |
| 03-149 | LG 795 | X | 1 |
| 03-150 | LG 793 | X | 1 |
| 03-151 | LG 793 | X | 1 |
| 03-152 | LG 795 | X | 1 |

| OREGON | Page | Code | Pk. |
|---|---|---|---|
| 03-153 | LG 794 | X | 1 |
| 03-154 | LG 793 | X | 1 |
| 03-155 | LG 793 | X | 1 |
| 03-156 | LG 793 | X | 1 |
| 03-157 | LG 793 | X | 1 |
| 03-300 | LG 800 | X | 1 |
| 03-301 | LG 799 | X | 1 |
| 03-304 | LG 800 | X | 1 |
| 03-305 | LG 799 | X | 1 |
| 03-306 | LG 800 | X | 1 |
| 03-307 | LG 801 | X | 1 |
| 03-309 | LG 800 | X | 1 |
| 03-310 | LG 801 | X | 1 |
| 03-311 | LG 801 | X | 1 |
| 03-312 | LG 799 | X | 1 |
| 03-313 | LG 801 | X | 1 |
| 03-314 | LG 800 | X | 2 |
| 03-316 | LG 800 | X | 1 |
| 03-317 | LG 800 | X | 2 |
| 03-318 | LG 800 | X | 2 |
| 03-319 | LG 800 | X | 10 |
| 03-320 | LG 799 | X | 1 |
| 03-321 | LG 800 | X | 1 |
| 03-322 | LG 800 | X | 1 |
| 03-324 | LG 800 | X | 5 |
| 03-325 | LG 800 | X | 1 |
| 03-326 | LG 800 | X | 2 |
| 03-328 | LG 801 | X | 1 |
| 03-500 | LG 796 | X | 1 |
| 03-501 | LG 796 | X | 1 |
| 03-502 | LG 797 | X | 1 |
| 03-503 | LG 797 | X | 1 |
| 03-504 | LG 797 | X | 1 |
| 03-505 | LG 798 | X | 1 |
| 03-506 | LG 797 | X | 1 |
| 03-507 | LG 798 | X | 1 |
| 03-508 | LG 798 | X | 1 |
| 04-001 | SFS 105 | X | 1 |
| 04-006-0 | LG 686 | X | 1 |
| 04-007 | LG 686 | X | 1 |
| 04-008 | LG 686 | X | 10 |
| 04-009 | LG 686 | X | 10 |
| 04-015 | LG 899 | X | 10 |
| 04-111 | SFS 105 | X | 10 |
| 04-112 | SFS 105 | X | 10 |
| 04-114 | SFS 105 | X | 10 |
| 04-116 | SFS 105 | X | 10 |
| 04-117 | SFS 105 | X | 10 |
| 04-118 | SFS 105 | X | 10 |
| 04-119 | SFS 105 | X | 10 |
| 04-121 | SFS 105 | X | 10 |
| 04-125 | LG 694 | X | 1 |
| 04-150 | SFS 103 | X | 10 |
| 04-151 | SFS 105 | X | 10 |
| 04-152 | SFS 103 | X | 10 |
| 04-153 | SFS 103 | X | 10 |
| 04-154 | SFS 103 | X | 10 |
| 04-155 | SFS 103 | X | 10 |
| 04-157 | SFS 103 | X | 10 |
| 04-158 | SFS 103 | X | 10 |
| 04-159 | SFS 103 | X | 10 |
| 04-160 | SFS 103 | X | 10 |
| 04-163 | SFS 104 | X | 1 |
| 04-164 | SFS 104 | X | 10 |
| 04-170 | SFS 103 | X | 1 |
| 04-555 | SFS 105 | X | 10 |
| 04-556 | SFS 103 | X | 10 |
| 04-720 | SFS 105 | X | 10 |
| 04-721 | | X | 10 |
| 04-722 | | X | 10 |
| 04-723 | | X | 10 |

N = New Item
F = NLA after inventories are sold

D = Discontinued after 2019 catalog
X = Active part number

# 2019 Numerical Index

| OREGON | Page | Code | Pk. |
|---|---|---|---|
| 04-725 | SFS 105 | X | 10 |
| 05-001 | LG 913 | X | 1 |
| 05-020 | LG 913 | X | 1 |
| 05-021 | LG 913 | X | 1 |
| 05-022 | LG 913 | X | 1 |
| 05-023 | LG 914 | X | 1 |
| 05-027 | LG 913 | N | 1 |
| 05-060 | LG 914 | X | 10 |
| 05-061 | LG 914 | X | 10 |
| 05-070 | LG 914 | X | 10 |
| 05-072 | LG 1023 | X | 1 |
| 06-003 | LG 805 | X | 1 |
| 06-004 | LG 805 | X | 1 |
| 07-001 | LG 765 | X | 1 |
| 07-004 | LG 769 | X | 10 |
| 07-007 | LG 689 | X | 1 |
| 07-008 | LG 762 | X | 1 |
| 07-009 | LG 762 | X | 1 |
| 07-010 | LG 764 | X | 1 |
| 07-011 | LG 763 | X | 1 |
| 07-013 | LG 773 | X | 1 |
| 07-016 | LG 762 | X | 1 |
| 07-017 | LG 1022 | X | 1 |
| 07-022 | LG 764 | X | 1 |
| 07-024 | LG 771 | X | 1 |
| 07-025 | LG 771 | X | 1 |
| 07-026 | LG 772 | X | 1 |
| 07-060 | LG 762 | X | 1 |
| 07-061 | LG 762 | X | 1 |
| 07-062 | LG 775 | X | 1 |
| 07-063 | LG 775 | X | 1 |
| 07-064 | LG 775 | X | 1 |
| 07-066 | LG 778 | X | 1 |
| 07-071 | LG 1020 | X | 1 |
| 07-072 | LG 763 | X | 1 |
| 07-073 | LG 768 | X | 1 |
| 07-074 | LG 1026 | X | 1 |
| 07-075 | LG 763 | X | 1 |
| 07-076 | LG 762 | X | 1 |
| 07-084 | LG 768 | X | 1 |
| 07-085 | LG 764 | X | 1 |
| 07-086 | | X | 1 |
| 07-088 | LG 768 | X | 1 |
| 07-090 | LG 764 | X | 1 |
| 07-092 | LG 778 | X | 1 |
| 07-094 | LG 778 | X | 1 |
| 07-097 | LG 764 | X | 1 |
| 07-098 | LG 765 | X | 1 |
| 07-099 | LG 764 | X | 1 |
| 07-100 | LG 774 | X | 10 |
| 07-101 | LG 775 | X | 10 |
| 07-102 | LG 774 | X | 10 |
| 07-103 | LG 775 | X | 1 |
| 07-104 | LG 776 | X | 1 |
| 07-107 | LG 774 | X | 1 |
| 07-109 | LG 778 | X | 10 |
| 07-110 | LG 776 | X | 1 |
| 07-111 | LG 776 | X | 1 |
| 07-112 | LG 774 | X | 1 |
| 07-118 | LG 777 | X | 1 |
| 07-122 | LG 775 | X | 1 |
| 07-124 | LG 776 | X | 1 |
| 07-125 | LG 766 | X | 1 |
| 07-126 | LG 764 | X | 10 |
| 07-127 | LG 764 | X | 1 |
| 07-129 | LG 774 | X | 10 |
| 07-131 | LG 772 | X | 1 |
| 07-132 | LG 773 | X | 1 |
| 07-133 | LG 778 | X | 10 |
| 07-134 | LG 763 | X | 1 |
| 07-135 | LG 762 | X | 1 |

| OREGON | Page | Code | Pk. |
|---|---|---|---|
| 07-136 | LG 762 | X | 1 |
| 07-137 | LG 779 | X | 10 |
| 07-138 | | N | 1 |
| 07-140 | LG 765 | X | 1 |
| 07-141 | LG 775 | X | 1 |
| 07-142 | LG 763 | N | 1 |
| 07-143 | LG 776 | N | 1 |
| 07-144 | LG 762 | N | 1 |
| 07-145 | LG 762 | X | 1 |
| 07-146 | LG 762 | X | 1 |
| 07-147 | LG 780 | N | 1 |
| 07-148 | LG 780 | N | 1 |
| 07-149 | LG 689 | N | 1 |
| 07-150 | LG 761 | X | 1 |
| 07-151 | LG 761 | X | 1 |
| 07-152 | LG 761 | X | 1 |
| 07-153 | LG 761 | X | 1 |
| 07-154 | LG 761 | X | 1 |
| 07-155 | LG 761 | X | 1 |
| 07-156 | LG 761 | X | 1 |
| 07-157 | LG 761 | X | 1 |
| 07-158 | LG 761 | X | 1 |
| 07-160 | LG 774 | X | 1 |
| 07-162 | LG 763 | X | 1 |
| 07-163 | LG 777 | N | 1 |
| 07-164 | LG 777 | N | 1 |
| 07-165 | LG 777 | N | 1 |
| 07-166 | LG 777 | N | 1 |
| 07-167 | LG 763 | N | 1 |
| 07-200 | LG 778 | X | 10 |
| 07-201 | LG 779 | X | 10 |
| 07-204 | LG 778 | X | 10 |
| 07-205 | LG 779 | X | 10 |
| 07-206 | LG 776 | X | 10 |
| 07-207 | LG 779 | X | 10 |
| 07-208 | LG 779 | X | 1 |
| 07-209 | LG 779 | X | 1 |
| 07-210 | LG 779 | X | 1 |
| 07-211 | LG 779 | X | 1 |
| 07-213 | LG 777 | X | 1 |
| 07-214 | LG 779 | X | 1 |
| 07-215 | LG 776 | X | 10 |
| 07-217 | LG 778 | X | 1 |
| 07-219 | LG 779 | X | 1 |
| 07-250 | | X | 1 |
| 07-251 | LG 761 | X | 1 |
| 07-252 | LG 761 | X | 1 |
| 07-253 | LG 761 | X | 1 |
| 07-254 | LG 761 | X | 1 |
| 07-255 | LG 761 | X | 1 |
| 07-256 | LG 761 | X | 1 |
| 07-257 | LG 761 | X | 1 |
| 07-258 | LG 761 | X | 1 |
| 07-259 | LG 761 | X | 1 |
| 07-260 | LG 761 | X | 1 |
| 07-261 | LG 761 | X | 1 |
| 07-262 | LG 761 | X | 1 |
| 07-263 | LG 761 | X | 1 |
| 07-264 | LG 761 | X | 1 |
| 07-265 | LG 761 | X | 1 |
| 07-266 | LG 761 | X | 1 |
| 07-267 | LG 761 | X | 1 |
| 07-268 | LG 761 | X | 1 |
| 07-303 | LG 770 | X | 10 |
| 07-304 | LG 770 | X | 1 |
| 07-307 | LG 770 | X | 1 |
| 07-308 | LG 772 | X | 1 |
| 07-309 | LG 772 | X | 1 |
| 07-312 | LG 773 | X | 1 |
| 07-314 | LG 773 | X | 1 |
| 07-315 | LG 772 | X | 1 |

| OREGON | Page | Code | Pk. |
|---|---|---|---|
| 07-317 | LG 771 | X | 1 |
| 07-318 | LG 771 | X | 1 |
| 07-319 | LG 771 | X | 1 |
| 07-331 | LG 776 | X | 1 |
| 07-332 | LG 776 | X | 1 |
| 07-390 | LG 766 | X | 1 |
| 07-391 | LG 766 | X | 10 |
| 07-392 | LG 767 | X | 10 |
| 07-393 | LG 765 | X | 1 |
| 07-400 | LG 767 | X | 10 |
| 07-403 | LG 766 | X | 1 |
| 07-404 | LG 766 | X | 10 |
| 07-406 | LG 767 | X | 10 |
| 07-407 | LG 767 | X | 10 |
| 07-408 | LG 766 | X | 10 |
| 07-409 | LG 766 | X | 1 |
| 07-410 | | N | 1 |
| 07-411 | | N | 1 |
| 07-450 | LG 761 | X | 1 |
| 07-551 | LG 761 | X | 10 |
| 07-552 | LG 761 | X | 10 |
| 07-553 | LG 761 | X | 10 |
| 07-555 | LG 761 | X | 10 |
| 07-600 | LG 770 | X | 1 |
| 07-601 | LG 770 | X | 1 |
| 07-602 | LG 770 | X | 1 |
| 07-700 | LG 767 | X | 1 |
| 08-002 | | N | 1 |
| 08-010 | SFS 103 | X | 1 |
| 08-016 | SFS 101 | X | 1 |
| 08-023 | SFS 104 | X | 1 |
| 08-075-0 | SFS 103 | X | 1 |
| 08-150 | SFS 100 | X | 1 |
| 08-152 | SFS 100 | X | 1 |
| 08-200 | SFS 101 | X | 1 |
| 08-201 | SFS 104 | X | 1 |
| 08-225 | SFS 102 | X | 1 |
| 08-240 | SFS 101 | X | 1 |
| 08-300 | SFS 100 | X | 1 |
| 08-331 | SFS 103 | X | 1 |
| 08-375 | SFS 102 | X | 1 |
| 08-410 | SFS 100 | X | 1 |
| 08-422 | SFS 104 | X | 1 |
| 08-423 | SFS 104 | X | 1 |
| 08-710 | SFS 102 | X | 1 |
| 09-006 | SFS 106 | X | 10 |
| 09-009 | SFS 106 | X | 10 |
| 09-010 | | N | 6 |
| 09-011 | SFS 106 | X | 10 |
| 09-022 | | X | 1 |
| 09-238 | SFS 106 | X | 10 |
| 09-255 | SFS 106 | X | 10 |
| 09-260 | LG 870 | X | 10 |
| 09-801 | LG 229 | X | 10 |
| 09-802 | LG 233 | X | 10 |
| 09-803 | LG 697 | X | 1 |
| 09-804 | LG 233 | X | 1 |
| 09-808 | LG 697 | X | 1 |
| 09-901 | SFS 106 | X | 10 |
| 09-905 | SFS 106 | X | 10 |
| 10-002 | SFS 22 | X | 1 |
| 115-029 | LG 255 | X | 1 |
| 115-145 | LG 323 | X | 1 |
| 115-146 | LG 256 | X | 1 |
| 115-200 | LG 287 | X | 1 |
| 115-201 | LG 266 | X | 1 |
| 115-202 | LG 271 | X | 1 |
| 115-203 | LG 271 | X | 1 |
| 115-204 | LG 282 | X | 1 |
| 115-205 | LG 258 | X | 1 |
| 115-206 | LG 294 | X | 1 |



N = New Item
F = NLA after inventories are sold

D = Discontinued after 2019 catalog
X = Active part number

# 2019 Numerical Index

| OREGON | Page | Code | Pk. |
|---|---|---|---|
| 115-207 | LG 275 | X | 1 |
| 115-208 | LG 275 | X | 1 |
| 115-209 | LG 306 | X | 1 |
| 115-212 | LG 325 | X | 1 |
| 115-213 | LG 328 | X | 1 |
| 115-214 | LG 325 | X | 1 |
| 115-215 | LG 329 | X | 1 |
| 115-216 | LG 327 | X | 1 |
| 115-217 | LG 325 | X | 1 |
| 115-218 | LG 331 | X | 1 |
| 115-219 | LG 305 | X | 1 |
| 115-220 | LG 264 | X | 1 |
| 115-221 | LG 862 | X | 1 |
| 115-222 | LG 264 | X | 1 |
| 115-223 | LG 250 | X | 1 |
| 115-703 | LG 299 | N | 1 |
| 115-704 | LG 282 | N | 1 |
| 115-705 | LG 283 | N | 1 |
| 115-706 | LG 283 | N | 1 |
| 1215R | SFS 88 | X | 1 |
| 1215Y | SFS 88 | X | 1 |
| 15-001 | LG 311 | X | 1 |
| 15-002 | LG 311 | X | 1 |
| 15-004 | LG 282 | X | 1 |
| 15-005 | LG 282 | X | 1 |
| 15-009 | LG 296 | X | 1 |
| 15-010 | LG 296 | X | 1 |
| 15-011 | LG 299 | X | 1 |
| 15-012 | LG 299 | X | 1 |
| 15-013 | LG 256 | X | 1 |
| 15-014 | LG 251 | X | 1 |
| 15-016 | LG 323 | X | 1 |
| 15-017 | LG 279 | X | 1 |
| 15-018 | LG 279 | X | 1 |
| 15-019 | LG 279 | X | 1 |
| 15-020 | LG 291 | X | 1 |
| 15-021 | LG 256 | X | 1 |
| 15-022 | LG 292 | X | 1 |
| 15-023 | LG 256 | X | 1 |
| 15-024 | LG 292 | X | 1 |
| 15-025 | LG 255 | X | 1 |
| 15-026 | LG 277 | X | 1 |
| 15-027 | LG 306 | X | 1 |
| 15-028 | LG 277 | X | 1 |
| 15-029 | LG 291 | X | 1 |
| 15-030 | LG 285 | X | 1 |
| 15-031 | LG 287 | X | 1 |
| 15-032 | LG 287 | X | 1 |
| 15-033 | LG 287 | X | 1 |
| 15-034 | LG 293 | X | 1 |
| 15-035 | LG 295 | X | 1 |
| 15-036 | LG 295 | X | 1 |
| 15-037 | LG 295 | X | 1 |
| 15-038 | LG 296 | X | 1 |
| 15-039 | LG 296 | X | 1 |
| 15-040 | LG 296 | X | 1 |
| 15-041 | LG 297 | X | 1 |
| 15-042 | LG 297 | X | 1 |
| 15-043 | LG 299 | X | 1 |
| 15-045 | LG 314 | X | 1 |
| 15-046 | LG 314 | X | 1 |
| 15-047 | | X | 1 |
| 15-049 | LG 323 | X | 1 |
| 15-050 | LG 323 | X | 1 |
| 15-051 | LG 250 | X | 1 |
| 15-052 | LG 315 | X | 1 |
| 15-053 | LG 305 | X | 1 |
| 15-054 | LG 324 | X | 1 |
| 15-055 | LG 331 | X | 1 |
| 15-056 | LG 331 | X | 1 |
| 15-057 | LG 331 | X | 1 |

| OREGON | Page | Code | Pk. |
|---|---|---|---|
| 15-100 | LG 306 | X | 1 |
| 15-101 | LG 269 | X | 1 |
| 15-102 | LG 269 | X | 1 |
| 15-103 | LG 269 | X | 1 |
| 15-104 | LG 269 | X | 1 |
| 15-105 | LG 269 | X | 1 |
| 15-106 | LG 273 | X | 1 |
| 15-107 | LG 273 | X | 1 |
| 15-108 | LG 273 | X | 1 |
| 15-109 | LG 273 | X | 1 |
| 15-110 | LG 273 | X | 1 |
| 15-111 | LG 273 | X | 1 |
| 15-112 | LG 305 | X | 1 |
| 15-113 | LG 282 | X | 1 |
| 15-114 | LG 282 | X | 1 |
| 15-115 | LG 282 | X | 1 |
| 15-116 | LG 283 | X | 1 |
| 15-117 | LG 283 | X | 1 |
| 15-118 | LG 283 | X | 1 |
| 15-119 | LG 283 | X | 1 |
| 15-120 | LG 284 | X | 1 |
| 15-121 | LG 284 | X | 1 |
| 15-122 | LG 284 | X | 1 |
| 15-123 | LG 284 | X | 1 |
| 15-124 | LG 284 | X | 1 |
| 15-125 | LG 284 | X | 1 |
| 15-126 | LG 284 | X | 1 |
| 15-127 | LG 284 | X | 1 |
| 15-128 | LG 284 | X | 1 |
| 15-129 | LG 292 | X | 1 |
| 15-130 | LG 296 | X | 1 |
| 15-131 | LG 296 | X | 1 |
| 15-132 | LG 306 | X | 1 |
| 15-133 | LG 306 | X | 1 |
| 15-134 | LG 314 | X | 1 |
| 15-135 | LG 314 | X | 1 |
| 15-136 | LG 314 | X | 1 |
| 15-137 | LG 323 | X | 1 |
| 15-138 | LG 323 | X | 1 |
| 15-139 | LG 323 | X | 1 |
| 15-140 | LG 323 | X | 1 |
| 15-141 | LG 323 | X | 1 |
| 15-142 | LG 323 | X | 1 |
| 15-143 | LG 323 | X | 1 |
| 15-144 | LG 323 | X | 1 |
| 15-151 | LG 285 | X | 1 |
| 15-152 | LG 264 | X | 1 |
| 15-153 | LG 286 | X | 1 |
| 15-154 | LG 286 | X | 1 |
| 15-155 | LG 264 | X | 1 |
| 15-156 | LG 286 | X | 1 |
| 15-157 | LG 286 | X | 1 |
| 15-158 | LG 286 | X | 1 |
| 15-159 | LG 286 | X | 1 |
| 15-160 | LG 253 | X | 1 |
| 15-164 | LG 286 | X | 1 |
| 15-165 | LG 286 | X | 1 |
| 15-167 | LG 286 | X | 1 |
| 15-169 | LG 266 | X | 1 |
| 15-170 | LG 266 | X | 1 |
| 15-171 | LG 286 | X | 1 |
| 15-173 | LG 287 | X | 1 |
| 15-174 | LG 287 | X | 1 |
| 15-179 | LG 287 | X | 1 |
| 15-180 | LG 287 | X | 1 |
| 15-181 | LG 266 | X | 1 |
| 15-184 | LG 285 | X | 1 |
| 15-185 | LG 285 | X | 1 |
| 15-187 | LG 285 | X | 1 |
| 15-188 | LG 285 | X | 1 |
| 15-190 | LG 265 | X | 1 |

| OREGON | Page | Code | Pk. |
|---|---|---|---|
| 15-192 | LG 265 | X | 1 |
| 15-193 | LG 266 | X | 1 |
| 15-194 | LG 265 | X | 1 |
| 15-195 | LG 265 | X | 1 |
| 15-200 | LG 285 | X | 1 |
| 15-201 | LG 285 | X | 1 |
| 15-202 | LG 285 | X | 1 |
| 15-203 | LG 286 | X | 1 |
| 15-205 | LG 266 | X | 1 |
| 15-208 | LG 266 | X | 1 |
| 15-210 | LG 266 | X | 1 |
| 15-211 | LG 266 | X | 1 |
| 15-213 | LG 286 | X | 1 |
| 15-215 | LG 287 | X | 1 |
| 15-216 | LG 266 | X | 1 |
| 15-217 | LG 287 | X | 1 |
| 15-218 | LG 285 | X | 1 |
| 15-220 | LG 285 | X | 1 |
| 15-221 | LG 265 | X | 1 |
| 15-222 | LG 285 | X | 1 |
| 15-223 | LG 259 | X | 1 |
| 15-224 | LG 260 | X | 1 |
| 15-225 | LG 260 | X | 1 |
| 15-226 | LG 260 | X | 1 |
| 15-227 | LG 260 | X | 1 |
| 15-228 | LG 260 | X | 1 |
| 15-229 | LG 260 | X | 1 |
| 15-230 | LG 260 | X | 1 |
| 15-231 | LG 260 | X | 1 |
| 15-232 | LG 266 | X | 1 |
| 15-233 | LG 266 | X | 1 |
| 15-234 | LG 267 | X | 1 |
| 15-235 | LG 267 | X | 1 |
| 15-236 | LG 267 | X | 1 |
| 15-237 | LG 267 | X | 1 |
| 15-238 | LG 267 | X | 1 |
| 15-239 | LG 267 | X | 1 |
| 15-240 | LG 267 | X | 1 |
| 15-241 | LG 267 | X | 1 |
| 15-242 | LG 267 | X | 1 |
| 15-243 | LG 267 | X | 1 |
| 15-244 | LG 267 | X | 1 |
| 15-247 | LG 268 | X | 1 |
| 15-248 | LG 268 | X | 1 |
| 15-249 | LG 268 | X | 1 |
| 15-250 | LG 268 | X | 1 |
| 15-253 | LG 267 | X | 1 |
| 15-254 | LG 267 | X | 1 |
| 15-255 | LG 267 | X | 1 |
| 15-256 | LG 267 | X | 1 |
| 15-257 | LG 267 | X | 1 |
| 15-258 | LG 267 | X | 1 |
| 15-259 | LG 267 | X | 1 |
| 15-260 | LG 268 | X | 1 |
| 15-261 | LG 268 | X | 1 |
| 15-262 | LG 268 | X | 1 |
| 15-264 | LG 268 | X | 1 |
| 15-265 | LG 268 | X | 1 |
| 15-266 | LG 268 | X | 1 |
| 15-267 | LG 268 | X | 1 |
| 15-268 | LG 268 | X | 1 |
| 15-269 | LG 270 | X | 1 |
| 15-270 | LG 270 | X | 1 |
| 15-271 | LG 270 | X | 1 |
| 15-272 | LG 270 | X | 1 |
| 15-274 | LG 270 | X | 1 |
| 15-275 | LG 270 | X | 1 |
| 15-276 | LG 270 | X | 1 |
| 15-277 | LG 270 | X | 1 |
| 15-278 | LG 270 | X | 1 |
| 15-279 | LG 270 | X | 1 |

N = New Item
F = NLA after inventories are sold

D = Discontinued after 2019 catalog
X = Active part number

# 2019 Numerical Index

| OREGON | Page | Code | Pk. |
|---|---|---|---|
| 15-280 | LG 270 | X | 1 |
| 15-281 | LG 270 | X | 1 |
| 15-282 | LG 270 | X | 1 |
| 15-283 | LG 270 | X | 1 |
| 15-286 | LG 270 | X | 1 |
| 15-287 | LG 270 | X | 1 |
| 15-288 | LG 270 | X | 1 |
| 15-289 | LG 269 | X | 1 |
| 15-290 | LG 269 | X | 1 |
| 15-291 | LG 269 | X | 1 |
| 15-292 | LG 270 | X | 1 |
| 15-293 | LG 270 | X | 1 |
| 15-294 | LG 270 | X | 1 |
| 15-295 | LG 271 | X | 1 |
| 15-296 | LG 270 | X | 1 |
| 15-297 | LG 270 | X | 1 |
| 15-299 | LG 271 | X | 1 |
| 15-302 | LG 271 | X | 1 |
| 15-303 | LG 271 | X | 1 |
| 15-304 | LG 271 | X | 1 |
| 15-305 | LG 271 | X | 1 |
| 15-306 | LG 271 | X | 1 |
| 15-307 | LG 271 | X | 1 |
| 15-308 | LG 271 | X | 1 |
| 15-309 | LG 271 | X | 1 |
| 15-310 | LG 271 | X | 1 |
| 15-313 | LG 271 | X | 1 |
| 15-314 | LG 271 | X | 1 |
| 15-315 | LG 271 | X | 1 |
| 15-316 | LG 271 | X | 1 |
| 15-317 | LG 271 | X | 1 |
| 15-318 | LG 271 | X | 1 |
| 15-320 | LG 272 | X | 1 |
| 15-321 | LG 272 | X | 1 |
| 15-322 | LG 272 | X | 1 |
| 15-331 | LG 272 | X | 1 |
| 15-333 | LG 272 | X | 1 |
| 15-335 | LG 272 | X | 1 |
| 15-337 | LG 272 | X | 1 |
| 15-339 | LG 272 | X | 1 |
| 15-350 | LG 272 | X | 1 |
| 15-351 | LG 272 | X | 1 |
| 15-352 | LG 272 | X | 1 |
| 15-353 | LG 272 | X | 1 |
| 15-354 | LG 272 | X | 1 |
| 15-355 | LG 272 | X | 1 |
| 15-356 | LG 272 | X | 1 |
| 15-357 | LG 272 | X | 1 |
| 15-358 | LG 272 | X | 1 |
| 15-359 | LG 272 | X | 1 |
| 15-360 | LG 272 | X | 1 |
| 15-361 | LG 272 | X | 1 |
| 15-363 | LG 272 | X | 1 |
| 15-364 | LG 272 | X | 1 |
| 15-366 | LG 277 | X | 1 |
| 15-367 | LG 277 | X | 1 |
| 15-368 | LG 277 | X | 1 |
| 15-369 | LG 278 | X | 1 |
| 15-370 | LG 278 | X | 1 |
| 15-371 | LG 278 | X | 1 |
| 15-372 | LG 278 | X | 1 |
| 15-373 | LG 278 | X | 1 |
| 15-374 | LG 278 | X | 1 |
| 15-375 | LG 278 | X | 1 |
| 15-376 | LG 278 | X | 1 |
| 15-386 | LG 278 | X | 1 |
| 15-388 | LG 278 | X | 1 |
| 15-389 | LG 278 | X | 1 |
| 15-390 | LG 278 | X | 1 |
| 15-394 | LG 278 | X | 1 |
| 15-395 | LG 278 | X | 1 |

| OREGON | Page | Code | Pk. |
|---|---|---|---|
| 15-398 | LG 282 | X | 1 |
| 15-399 | LG 282 | X | 1 |
| 15-401 | LG 279 | X | 1 |
| 15-404 | LG 279 | X | 1 |
| 15-405 | LG 279 | X | 1 |
| 15-408 | LG 279 | X | 1 |
| 15-409 | LG 280 | X | 1 |
| 15-410 | LG 280 | X | 1 |
| 15-411 | LG 280 | X | 1 |
| 15-412 | LG 280 | X | 1 |
| 15-413 | LG 280 | X | 1 |
| 15-415 | LG 280 | X | 1 |
| 15-416 | LG 280 | X | 1 |
| 15-417 | LG 280 | X | 1 |
| 15-418 | LG 280 | X | 1 |
| 15-419 | LG 280 | X | 1 |
| 15-420 | LG 280 | X | 1 |
| 15-421 | LG 280 | X | 1 |
| 15-424 | LG 280 | X | 1 |
| 15-425 | LG 280 | X | 1 |
| 15-426 | LG 280 | X | 1 |
| 15-427 | LG 282 | X | 1 |
| 15-428 | LG 283 | X | 1 |
| 15-429 | LG 283 | X | 1 |
| 15-430 | LG 283 | X | 1 |
| 15-431 | LG 283 | X | 1 |
| 15-432 | LG 283 | X | 1 |
| 15-434 | LG 283 | X | 1 |
| 15-435 | LG 283 | X | 1 |
| 15-436 | LG 283 | X | 1 |
| 15-437 | LG 283 | X | 1 |
| 15-438 | LG 283 | X | 1 |
| 15-440 | LG 283 | X | 1 |
| 15-443 | LG 284 | X | 1 |
| 15-444 | LG 284 | X | 1 |
| 15-445 | LG 284 | X | 1 |
| 15-446 | LG 284 | X | 1 |
| 15-449 | LG 284 | X | 1 |
| 15-450 | LG 285 | X | 1 |
| 15-451 | LG 285 | X | 1 |
| 15-452 | LG 287 | X | 1 |
| 15-453 | LG 287 | X | 1 |
| 15-454 | LG 287 | X | 1 |
| 15-455 | LG 287 | X | 1 |
| 15-457 | LG 287 | X | 1 |
| 15-458 | LG 287 | X | 1 |
| 15-459 | LG 288 | X | 1 |
| 15-460 | LG 288 | X | 1 |
| 15-461 | LG 288 | X | 1 |
| 15-462 | LG 288 | X | 1 |
| 15-463 | LG 288 | X | 1 |
| 15-464 | LG 288 | X | 1 |
| 15-465 | LG 288 | X | 1 |
| 15-466 | LG 288 | X | 1 |
| 15-467 | LG 288 | X | 1 |
| 15-472 | LG 259 | X | 1 |
| 15-473 | LG 288 | X | 1 |
| 15-474 | LG 288 | X | 1 |
| 15-477 | LG 288 | X | 1 |
| 15-483 | LG 293 | X | 1 |
| 15-485 | LG 293 | X | 1 |
| 15-486 | LG 293 | X | 1 |
| 15-487 | LG 293 | X | 1 |
| 15-488 | LG 293 | X | 1 |
| 15-490 | LG 294 | X | 1 |
| 15-491 | LG 294 | X | 1 |
| 15-492 | LG 294 | X | 1 |
| 15-493 | LG 294 | X | 1 |
| 15-494 | LG 294 | X | 1 |
| 15-497 | LG 294 | X | 1 |
| 15-498 | LG 294 | X | 1 |

| OREGON | Page | Code | Pk. |
|---|---|---|---|
| 15-499 | LG 294 | X | 1 |
| 15-500 | LG 294 | X | 1 |
| 15-501 | LG 294 | X | 1 |
| 15-507 | LG 296 | X | 1 |
| 15-508 | LG 296 | X | 1 |
| 15-511 | LG 292 | X | 1 |
| 15-512 | LG 298 | X | 1 |
| 15-513 | LG 298 | X | 1 |
| 15-514 | LG 298 | X | 1 |
| 15-515 | LG 298 | X | 1 |
| 15-516 | LG 298 | X | 1 |
| 15-517 | LG 298 | X | 1 |
| 15-519 | LG 298 | X | 1 |
| 15-522 | LG 298 | X | 1 |
| 15-525 | LG 298 | X | 1 |
| 15-526 | LG 298 | X | 1 |
| 15-529 | LG 298 | X | 1 |
| 15-535 | LG 298 | X | 1 |
| 15-536 | LG 298 | X | 1 |
| 15-538 | LG 298 | X | 1 |
| 15-539 | LG 298 | X | 1 |
| 15-541 | LG 298 | X | 1 |
| 15-544 | LG 298 | X | 1 |
| 15-545 | LG 298 | X | 1 |
| 15-546 | LG 298 | X | 1 |
| 15-547 | LG 298 | X | 1 |
| 15-548 | LG 298 | X | 1 |
| 15-549 | LG 299 | X | 1 |
| 15-550 | LG 299 | X | 1 |
| 15-553 | LG 299 | X | 1 |
| 15-559 | LG 299 | X | 1 |
| 15-561 | LG 299 | X | 1 |
| 15-566 | LG 299 | X | 1 |
| 15-567 | LG 299 | X | 1 |
| 15-568 | LG 299 | X | 1 |
| 15-570 | LG 299 | X | 1 |
| 15-571 | LG 299 | X | 1 |
| 15-572 | LG 299 | X | 1 |
| 15-573 | LG 299 | X | 1 |
| 15-574 | LG 299 | X | 1 |
| 15-575 | LG 299 | X | 1 |
| 15-576 | LG 299 | X | 1 |
| 15-577 | LG 300 | X | 1 |
| 15-578 | LG 300 | X | 1 |
| 15-579 | LG 300 | X | 1 |
| 15-580 | LG 300 | X | 1 |
| 15-581 | LG 273 | X | 1 |
| 15-583 | LG 273 | X | 1 |
| 15-588 | LG 275 | X | 1 |
| 15-589 | LG 273 | X | 1 |
| 15-590 | LG 300 | X | 1 |
| 15-593 | LG 301 | X | 1 |
| 15-594 | LG 274 | X | 1 |
| 15-595 | LG 274 | X | 1 |
| 15-598 | LG 301 | X | 1 |
| 15-601 | LG 274 | X | 1 |
| 15-602 | LG 304 | X | 1 |
| 15-603 | LG 304 | X | 1 |
| 15-604 | LG 275 | X | 1 |
| 15-605 | LG 275 | X | 1 |
| 15-606 | LG 275 | X | 1 |
| 15-609 | LG 305 | X | 1 |
| 15-613 | LG 305 | X | 1 |
| 15-616 | LG 303 | X | 1 |
| 15-619 | LG 274 | X | 1 |
| 15-623 | LG 274 | X | 1 |
| 15-625 | LG 275 | X | 1 |
| 15-627 | LG 275 | X | 1 |
| 15-628 | LG 275 | X | 1 |
| 15-629 | LG 304 | X | 1 |
| 15-630 | LG 306 | X | 1 |



N = New Item
F = NLA after inventories are sold

D = Discontinued after 2019 catalog
X = Active part number

| OREGON | Page | Code | Pk. |
|---|---|---|---|
| 15-634 | LG 307 | X | 1 |
| 15-638 | LG 308 | X | 1 |
| 15-641 | LG 308 | X | 1 |
| 15-642 | LG 308 | X | 1 |
| 15-643 | LG 308 | X | 1 |
| 15-644 | LG 308 | X | 1 |
| 15-645 | LG 306 | X | 1 |
| 15-646 | LG 306 | X | 1 |
| 15-647 | LG 306 | X | 1 |
| 15-648 | LG 306 | X | 1 |
| 15-649 | LG 309 | X | 1 |
| 15-650 | LG 259 | X | 1 |
| 15-651 | LG 259 | X | 1 |
| 15-652 | LG 259 | X | 1 |
| 15-653 | LG 310 | X | 1 |
| 15-654 | LG 309 | X | 1 |
| 15-655 | LG 309 | X | 1 |
| 15-657 | LG 259 | X | 1 |
| 15-659 | LG 309 | X | 1 |
| 15-660 | LG 309 | X | 1 |
| 15-661 | LG 310 | X | 1 |
| 15-662 | LG 310 | X | 1 |
| 15-663 | LG 310 | X | 1 |
| 15-664 | LG 311 | X | 1 |
| 15-665 | LG 311 | X | 1 |
| 15-667 | LG 311 | X | 1 |
| 15-668 | LG 311 | X | 1 |
| 15-669 | LG 311 | X | 1 |
| 15-670 | LG 311 | X | 1 |
| 15-672 | LG 311 | X | 1 |
| 15-673 | LG 311 | X | 1 |
| 15-674 | LG 312 | X | 1 |
| 15-677 | LG 313 | X | 1 |
| 15-678 | LG 313 | X | 1 |
| 15-679 | LG 313 | X | 1 |
| 15-680 | LG 312 | X | 1 |
| 15-681 | LG 313 | X | 1 |
| 15-682 | LG 313 | X | 1 |
| 15-683 | LG 313 | X | 1 |
| 15-684 | LG 313 | X | 1 |
| 15-685 | LG 315 | X | 1 |
| 15-686 | LG 315 | X | 1 |
| 15-688 | LG 315 | X | 1 |
| 15-691 | LG 260 | X | 1 |
| 15-693 | LG 311 | X | 1 |
| 15-695 | LG 260 | X | 1 |
| 15-700 | LG 259 | X | 1 |
| 15-704 | LG 311 | X | 1 |
| 15-705 | LG 315 | X | 1 |
| 15-708 | LG 312 | X | 1 |
| 15-711 | LG 259 | X | 1 |
| 15-712 | LG 260 | X | 1 |
| 15-715 | LG 315 | X | 1 |
| 15-716 | LG 315 | X | 1 |
| 15-717 | LG 260 | X | 1 |
| 15-718 | LG 259 | X | 1 |
| 15-719 | LG 312 | X | 1 |
| 15-724 | LG 316 | X | 1 |
| 15-729 | LG 316 | X | 1 |
| 15-731 | LG 316 | X | 1 |
| 15-732 | LG 316 | X | 1 |
| 15-733 | LG 316 | X | 1 |
| 15-734 | LG 316 | X | 1 |
| 15-735 | LG 316 | X | 1 |
| 15-737 | LG 316 | X | 1 |
| 15-739 | LG 316 | X | 1 |
| 15-740 | LG 316 | X | 1 |
| 15-741 | LG 317 | X | 1 |
| 15-742 | LG 317 | X | 1 |
| 15-744 | LG 317 | X | 1 |
| 15-746 | LG 317 | X | 1 |

| OREGON | Page | Code | Pk. |
|---|---|---|---|
| 15-748 | LG 317 | X | 1 |
| 15-749 | LG 317 | X | 1 |
| 15-750 | LG 317 | X | 1 |
| 15-751 | LG 317 | X | 1 |
| 15-753 | LG 317 | X | 1 |
| 15-756 | LG 317 | X | 1 |
| 15-760 | LG 317 | X | 1 |
| 15-761 | LG 317 | X | 1 |
| 15-762 | LG 317 | X | 1 |
| 15-763 | LG 318 | X | 1 |
| 15-764 | LG 318 | X | 1 |
| 15-765 | LG 318 | X | 1 |
| 15-766 | LG 318 | X | 1 |
| 15-767 | LG 318 | X | 1 |
| 15-768 | LG 318 | X | 1 |
| 15-769 | LG 318 | X | 1 |
| 15-771 | LG 318 | X | 1 |
| 15-773 | LG 318 | X | 1 |
| 15-774 | LG 318 | X | 1 |
| 15-776 | LG 318 | X | 1 |
| 15-780 | LG 320 | X | 1 |
| 15-781 | LG 320 | X | 1 |
| 15-782 | LG 320 | X | 1 |
| 15-783 | LG 320 | X | 1 |
| 15-784 | LG 320 | X | 1 |
| 15-785 | LG 320 | X | 1 |
| 15-786 | LG 320 | X | 1 |
| 15-788 | LG 320 | X | 1 |
| 15-789 | LG 320 | X | 1 |
| 15-790 | LG 320 | X | 1 |
| 15-791 | LG 320 | X | 1 |
| 15-792 | LG 320 | X | 1 |
| 15-794 | LG 320 | X | 1 |
| 15-795 | LG 320 | X | 1 |
| 15-797 | LG 320 | X | 1 |
| 15-798 | LG 320 | X | 1 |
| 15-799 | LG 320 | X | 1 |
| 15-800 | LG 320 | X | 1 |
| 15-801 | LG 321 | X | 1 |
| 15-802 | LG 321 | X | 1 |
| 15-803 | LG 321 | X | 1 |
| 15-804 | LG 321 | X | 1 |
| 15-805 | LG 321 | X | 1 |
| 15-807 | LG 321 | X | 1 |
| 15-809 | LG 321 | X | 1 |
| 15-810 | LG 321 | X | 1 |
| 15-812 | LG 321 | X | 1 |
| 15-813 | LG 321 | X | 1 |
| 15-814 | LG 321 | X | 1 |
| 15-815 | LG 321 | X | 1 |
| 15-820 | LG 321 | X | 1 |
| 15-821 | LG 321 | X | 1 |
| 15-824 | LG 321 | X | 1 |
| 15-825 | LG 321 | X | 1 |
| 15-826 | LG 321 | X | 1 |
| 15-827 | LG 322 | X | 1 |
| 15-828 | LG 322 | X | 1 |
| 15-829 | LG 324 | X | 1 |
| 15-833 | LG 324 | X | 1 |
| 15-836 | LG 324 | X | 1 |
| 15-837 | LG 324 | X | 1 |
| 15-838 | LG 324 | X | 1 |
| 15-839 | LG 324 | X | 1 |
| 15-842 | LG 325 | X | 1 |
| 15-843 | LG 325 | X | 1 |
| 15-844 | LG 325 | X | 1 |
| 15-845 | LG 325 | X | 1 |
| 15-847 | LG 325 | X | 1 |
| 15-848 | LG 325 | X | 1 |
| 15-849 | LG 325 | X | 1 |
| 15-850 | LG 325 | X | 1 |

| OREGON | Page | Code | Pk. |
|---|---|---|---|
| 15-851 | LG 325 | X | 1 |
| 15-852 | LG 325 | X | 1 |
| 15-853 | LG 325 | X | 1 |
| 15-854 | LG 325 | X | 1 |
| 15-855 | LG 258 | X | 1 |
| 15-856 | LG 325 | X | 1 |
| 15-858 | LG 325 | X | 1 |
| 15-860 | LG 325 | X | 1 |
| 15-861 | LG 325 | X | 1 |
| 15-863 | LG 326 | X | 1 |
| 15-864 | LG 326 | X | 1 |
| 15-865 | LG 326 | X | 1 |
| 15-867 | LG 326 | X | 1 |
| 15-868 | LG 326 | X | 1 |
| 15-869 | LG 326 | X | 1 |
| 15-870 | LG 326 | X | 1 |
| 15-871 | LG 326 | X | 1 |
| 15-872 | LG 326 | X | 1 |
| 15-873 | LG 326 | X | 1 |
| 15-874 | LG 326 | X | 1 |
| 15-875 | LG 326 | X | 1 |
| 15-876 | LG 326 | X | 1 |
| 15-877 | LG 326 | X | 1 |
| 15-878 | LG 327 | X | 1 |
| 15-879 | LG 327 | X | 1 |
| 15-881 | LG 327 | X | 1 |
| 15-882 | LG 327 | X | 1 |
| 15-883 | LG 327 | X | 1 |
| 15-884 | LG 327 | X | 1 |
| 15-885 | LG 327 | X | 1 |
| 15-886 | LG 327 | X | 1 |
| 15-887 | LG 327 | X | 1 |
| 15-888 | LG 327 | X | 1 |
| 15-889 | LG 327 | X | 1 |
| 15-890 | LG 327 | X | 1 |
| 15-891 | LG 327 | X | 1 |
| 15-892 | LG 327 | X | 1 |
| 15-893 | LG 328 | X | 1 |
| 15-894 | LG 328 | X | 1 |
| 15-895 | LG 328 | X | 1 |
| 15-896 | LG 328 | X | 1 |
| 15-897 | LG 328 | X | 1 |
| 15-898 | LG 328 | X | 1 |
| 15-899 | LG 328 | X | 1 |
| 15-900 | LG 328 | X | 1 |
| 15-901 | LG 328 | X | 1 |
| 15-902 | LG 328 | X | 1 |
| 15-903 | LG 328 | X | 1 |
| 15-904 | LG 328 | X | 1 |
| 15-905 | LG 328 | X | 1 |
| 15-906 | LG 328 | X | 1 |
| 15-907 | LG 329 | X | 1 |
| 15-908 | LG 329 | X | 1 |
| 15-911 | LG 329 | X | 1 |
| 15-913 | LG 329 | X | 1 |
| 15-914 | LG 329 | X | 1 |
| 15-916 | LG 329 | X | 1 |
| 15-918 | LG 329 | X | 1 |
| 15-920 | LG 329 | X | 1 |
| 15-921 | LG 329 | X | 1 |
| 15-922 | LG 329 | X | 1 |
| 15-923 | LG 330 | X | 1 |
| 15-924 | LG 330 | X | 1 |
| 15-926 | LG 330 | X | 1 |
| 15-928 | LG 330 | X | 1 |
| 15-929 | LG 330 | X | 1 |
| 15-930 | LG 330 | X | 1 |
| 15-931 | LG 330 | X | 1 |
| 15-932 | LG 330 | X | 1 |
| 15-933 | LG 330 | X | 1 |
| 15-934 | LG 330 | X | 1 |

N = New Item
F = NLA after inventories are sold

D = Discontinued after 2019 catalog
X = Active part number

# 2019 Numerical Index

| OREGON | Page | Code | Pk. |
|---|---|---|---|
| 15-935 | LG 330 | X | 1 |
| 15-936 | LG 330 | X | 1 |
| 15-938 | LG 326 | X | 1 |
| 15-939 | LG 329 | X | 1 |
| 15-940 | LG 329 | X | 1 |
| 15-943 | LG 329 | X | 1 |
| 15-945 | LG 325 | X | 1 |
| 15-947 | LG 328 | X | 1 |
| 15-948 | LG 253 | X | 1 |
| 15-949 | LG 255 | X | 1 |
| 15-951 | LG 297 | X | 1 |
| 15-952 | LG 297 | X | 1 |
| 15-954 | LG 297 | X | 1 |
| 15-955 | LG 297 | X | 1 |
| 15-956 | LG 297 | X | 1 |
| 15-957 | LG 297 | X | 1 |
| 15-958 | LG 297 | X | 1 |
| 15-959 | LG 297 | X | 1 |
| 15-961 | LG 297 | X | 1 |
| 15-962 | LG 297 | X | 1 |
| 15-963 | LG 297 | X | 1 |
| 1620E | SFS 89 | X | 1 |
| 1632E | SFS 89 | X | 1 |
| 1633E | SFS 89 | X | 1 |
| 1635E | SFS 89 | X | 1 |
| 1647E | SFS 89 | X | 1 |
| 1689E | SFS 89 | X | 1 |
| 16PB | SFS 93 | X | 12 |
| 175-000 | LG 262 | X | 1 |
| 175-002 | LG 301 | X | 1 |
| 175-012 | LG 301 | X | 1 |
| 175-021 | LG 274 | X | 1 |
| 175-025 | LG 302 | X | 1 |
| 175-028 | LG 302 | X | 1 |
| 175-029 | LG 303 | X | 1 |
| 175-041 | LG 307 | X | 1 |
| 175-068 | LG 318 | X | 1 |
| 175-073 | LG 319 | X | 1 |
| 175-099 | LG 262 | X | 1 |
| 175-105 | LG 319 | X | 1 |
| 175-106 | LG 261 | X | 1 |
| 175-119 | LG 302 | X | 1 |
| 175-135 | LG 308 | X | 1 |
| 175-164 | LG 262 | X | 1 |
| 175-169 | LG 290 | X | 1 |
| 175-170 | LG 290 | X | 1 |
| 175-171 | LG 261 | X | 1 |
| 175-195 | LG 289 | X | 1 |
| 175-197 | LG 290 | X | 1 |
| 175-248 | LG 294 | X | 1 |
| 175-295 | LG 295 | X | 1 |
| 175-299 | LG 295 | X | 1 |
| 175-300 | LG 295 | X | 1 |
| 175-654 | LG 263 | X | 1 |
| 175-673 | LG 305 | X | 1 |
| 175-676 | LG 304 | X | 1 |
| 175-677 | LG 304 | X | 1 |
| 175-706 | LG 276 | X | 1 |
| 175-710 | LG 276 | X | 1 |
| 175-714 | LG 276 | X | 1 |
| 175-800 | | D | 1 |
| 175-803 | LG 296 | X | 1 |
| 175-810 | LG 263 | X | 1 |
| 175-813 | LG 276 | X | 1 |
| 175-814 | LG 276 | X | 1 |
| 175-815 | LG 277 | X | 1 |
| 175-824 | LG 274 | X | 1 |
| 175-893 | LG 263 | X | 1 |
| 175-894 | LG 291 | X | 1 |
| 175-895 | LG 263 | X | 1 |
| 175-912 | LG 291 | X | 1 |
| 175-913 | LG 262 | X | 1 |
| 175-919 | LG 293 | X | 1 |
| 175-992 | LG 293 | X | 1 |
| 175-993 | LG 303 | X | 1 |
| 175-994 | LG 304 | X | 1 |
| 175-995 | LG 303 | X | 1 |
| 19-001 | LG 983 | X | 20 |
| 19-002 | LG 983 | X | 20 |
| 19-003 | LG 983 | X | 20 |
| 19-004 | LG 983 | X | 20 |
| 19-005 | LG 983 | X | 20 |
| 19-006 | LG 983 | X | 20 |
| 19-007 | LG 983 | X | 20 |
| 19-016 | LG 984 | X | 16 |
| 19-017 | LG 984 | X | 16 |
| 19-018 | LG 984 | X | 16 |
| 19-019 | LG 984 | X | 16 |
| 19-025 | LG 984 | X | 16 |
| 19-026 | LG 984 | X | 16 |
| 19-027 | LG 984 | X | 16 |
| 19-028 | LG 984 | X | 16 |
| 19-031 | LG 983 | X | 3 |
| 19-032 | LG 983 | X | 3 |
| 19-033 | LG 983 | X | 3 |
| 19-034 | LG 983 | X | 3 |
| 19-037 | LG 996 | X | 12 |
| 19-038 | LG 996 | X | 12 |
| 19-041 | LG 983 | X | 30 |
| 19-042 | LG 983 | X | 30 |
| 19-043 | LG 983 | X | 30 |
| 19-044 | LG 983 | X | 30 |
| 191-015 | LG 372 | X | 12 |
| 191-108 | LG 484 | X | 12 |
| 191-139 | LG 491 | X | 12 |
| 191-392 | LG 488 | X | 12 |
| 191-518 | LG 458 | N | 6 |
| 191-519 | LG 458 | N | 6 |
| 1910G | SFS 90 | X | 1 |
| 192-106 | LG 491 | X | 6 |
| 1926E | SFS 90 | X | 1 |
| 1932E | SFS 89 | X | 1 |
| 1947E | SFS 89 | X | 1 |
| 195-003 | LG 400 | X | 12 |
| 195-005 | LG 373 | X | 12 |
| 195-019 | LG 466 | X | 6 |
| 195-021 | LG 468 | X | 12 |
| 195-032 | LG 425 | X | 12 |
| 195-033 | LG 400 | X | 12 |
| 195-039 | LG 430 | X | 12 |
| 195-048 | LG 430 | X | 12 |
| 195-062 | LG 376 | X | 12 |
| 195-067 | LG 380 | X | 12 |
| 195-070 | LG 469 | X | 6 |
| 195-072 | LG 530 | X | 6 |
| 195-089 | LG 467 | N | 6 |
| 195-093 | LG 466 | N | 6 |
| 197-019 | LG 539 | X | 12 |
| 198-049 | LG 518 | X | 6 |
| 198-052 | LG 389 | X | 12 |
| 198-058 | LG 517 | X | 6 |
| 198-059 | LG 403 | X | 6 |
| 198-063 | LG 513 | X | 12 |
| 198-086 | LG 565 | X | 12 |
| 198-153 | LG 520 | X | 6 |
| 20-002 | | X | 1 |
| 20-020 | LG 979 | X | 12 |
| 20-021 | LG 979 | X | 12 |
| 20-022 | LG 979 | X | 12 |
| 20-023 | LG 979 | X | 4 |
| 20-024 | LG 979 | X | 4 |
| 20-025 | LG 979 | X | 4 |
| 20-026 | LG 979 | X | 4 |
| 20-027 | LG 979 | X | 4 |
| 20-028 | LG 979 | X | 4 |
| 20-034 | LG 979 | X | 12 |
| 20-035 | LG 979 | X | 4 |
| 20-036 | LG 979 | X | 4 |
| 20-100 | LG 979 | X | 12 |
| 20-101 | LG 979 | X | 12 |
| 20-102 | LG 979 | X | 4 |
| 20-103 | LG 979 | X | 4 |
| 20-104 | LG 979 | X | 18 |
| 20-106 | LG 979 | X | 18 |
| 20-107 | LG 979 | X | 12 |
| 20-108 | LG 979 | X | 12 |
| 20-109 | LG 979 | X | 4 |
| 20-110 | LG 979 | X | 4 |
| 20-111 | LG 979 | X | 4 |
| 20-112 | LG 979 | X | 4 |
| 20-113 | LG 979 | X | 4 |
| 20-114 | LG 979 | X | 4 |
| 20-115 | LG 979 | X | 4 |
| 20-116 | LG 979 | X | 4 |
| 20-117 | LG 979 | X | 18 |
| 20-118 | LG 979 | X | 12 |
| 20-119 | LG 979 | X | 4 |
| 20-123 | LG 979 | X | 12 |
| 20-124 | LG 979 | X | 4 |
| 20-125 | LG 979 | X | 4 |
| 21-000 | LG 985 | X | 10 |
| 21-005 | LG 981 | X | 4 |
| 21-030 | LG 981 | X | 4 |
| 21-055 | LG 981 | X | 4 |
| 21-080 | LG 981 | X | 4 |
| 21-095 | LG 981 | X | 4 |
| 21-105 | LG 981 | X | 4 |
| 21-131 | LG 981 | X | 4 |
| 21-155 | LG 981 | X | 4 |
| 21-170 | LG 981 | X | 4 |
| 21-180 | LG 981 | X | 4 |
| 21-195 | LG 981 | X | 4 |
| 21-205 | LG 981 | X | 18 |
| 21-230 | LG 981 | X | 18 |
| 21-231 | LG 981 | X | 12 |
| 21-232 | LG 981 | X | 4 |
| 21-233 | LG 981 | X | 4 |
| 21-234 | LG 981 | X | 12 |
| 21-235 | LG 981 | X | 4 |
| 21-236 | LG 981 | X | 4 |
| 21-255 | LG 981 | X | 18 |
| 21-265 | LG 981 | X | 18 |
| 21-280 | LG 981 | X | 18 |
| 21-295 | LG 981 | X | 18 |
| 21-305 | | X | 12 |
| 21-330 | LG 981 | X | 12 |
| 21-355 | LG 981 | X | 12 |
| 21-365 | LG 981 | X | 12 |
| 21-370 | LG 981 | X | 12 |
| 21-380 | LG 981 | X | 12 |
| 21-395 | LG 981 | X | 12 |
| 21-405 | LG 981 | X | 12 |
| 21-430 | LG 981 | X | 12 |
| 21-455 | LG 981 | X | 12 |
| 21-470 | LG 981 | X | 12 |
| 21-480 | LG 981 | X | 12 |
| 21-495 | LG 981 | X | 12 |
| 21-505 | LG 981 | X | 4 |
| 21-530 | LG 981 | X | 4 |
| 21-555 | LG 981 | X | 4 |
| 21-580 | LG 981 | X | 4 |
| 21-595 | LG 981 | X | 4 |
| 21-600 | LG 984 | X | 8 |



N = New Item
F = NLA after inventories are sold

D = Discontinued after 2019 catalog
X = Active part number

# 2019 Numerical Index

| OREGON | Page | Code | Pk. |
|---|---|---|---|
| 21-601 | LG 984 | X | 8 |
| 21-602 | LG 984 | X | 8 |
| 21-603 | LG 984 | X | 8 |
| 21-604 | LG 984 | X | 8 |
| 21-605 | LG 984 | X | 4 |
| 21-606 | LG 984 | X | 4 |
| 21-607 | LG 984 | X | 4 |
| 21-608 | LG 984 | X | 4 |
| 21-609 | LG 984 | X | 4 |
| 21-805 | LG 981 | X | 4 |
| 21-830 | LG 981 | X | 4 |
| 21-855 | LG 981 | X | 4 |
| 21-880 | LG 981 | X | 4 |
| 21-895 | LG 981 | X | 4 |
| 21-905 | LG 981 | X | 18 |
| 21-930 | LG 981 | X | 18 |
| 21-955 | LG 981 | X | 18 |
| 21-980 | LG 981 | X | 18 |
| 21-995 | LG 981 | X | 18 |
| 22-005 | LG 980 | X | 4 |
| 22-030 | LG 980 | X | 4 |
| 22-055 | LG 980 | X | 4 |
| 22-070 | LG 980 | X | 4 |
| 22-080 | LG 980 | X | 4 |
| 22-095 | LG 980 | X | 4 |
| 22-105 | LG 980 | X | 4 |
| 22-130 | LG 980 | X | 4 |
| 22-155 | LG 980 | X | 4 |
| 22-170 | LG 980 | X | 4 |
| 22-180 | LG 980 | X | 4 |
| 22-195 | LG 980 | X | 4 |
| 22-205 | LG 980 | X | 18 |
| 22-230 | LG 980 | X | 18 |
| 22-255 | LG 980 | X | 18 |
| 22-270 | LG 980 | X | 18 |
| 22-280 | LG 980 | X | 18 |
| 22-295 | LG 980 | X | 18 |
| 22-305 | LG 980 | X | 12 |
| 22-330 | LG 980 | X | 12 |
| 22-355 | LG 980 | X | 12 |
| 22-370 | LG 980 | X | 12 |
| 22-380 | LG 980 | X | 12 |
| 22-395 | LG 980 | X | 12 |
| 22-405 | LG 980 | X | 12 |
| 22-430 | LG 980 | X | 12 |
| 22-455 | LG 980 | X | 12 |
| 22-470 | LG 980 | X | 12 |
| 22-480 | LG 980 | X | 12 |
| 22-495 | LG 980 | X | 12 |
| 22-505 | LG 980 | X | 4 |
| 22-530 | LG 980 | X | 4 |
| 22-555 | LG 980 | X | 4 |
| 22-570 | LG 980 | X | 4 |
| 22-580 | LG 980 | X | 4 |
| 22-595 | LG 980 | X | 4 |
| 22-805 | LG 980 | X | 4 |
| 22-830 | LG 980 | X | 4 |
| 22-855 | LG 980 | X | 4 |
| 22-870 | LG 980 | X | 4 |
| 22-880 | LG 980 | X | 4 |
| 22-895 | LG 980 | X | 4 |
| 22-905 | LG 980 | X | 18 |
| 22-930 | LG 980 | X | 18 |
| 22-955 | LG 980 | X | 18 |
| 22-970 | LG 980 | X | 18 |
| 22-980 | LG 980 | X | 18 |
| 22-995 | LG 980 | X | 18 |
| 22STD | SFS 22 | X | 1 |
| 22TALL | SFS 22 | X | 1 |
| 23-131 | LG 983 | X | 4 |
| 23-180 | LG 983 | X | 4 |
| 23-195 | LG 983 | X | 4 |
| 23-331 | LG 983 | X | 12 |
| 23-380 | LG 983 | X | 12 |
| 23-395 | LG 983 | X | 12 |
| 23-530 | LG 983 | X | 4 |
| 23-580 | LG 983 | X | 4 |
| 23-595 | LG 983 | X | 4 |
| 23-705 | LG 983 | X | 12 |
| 23-780 | LG 983 | X | 12 |
| 23-795 | LG 983 | X | 12 |
| 24-008 | LG 973 | X | 10 |
| 24-009 | LG 973 | X | 1 |
| 24-010 | LG 973 | X | 10 |
| 24-011 | LG 973 | X | 10 |
| 24-012 | LG 973 | X | 10 |
| 24-101 | LG 973 | X | 1 |
| 24-102 | LG 973 | X | 1 |
| 24-103 | LG 973 | X | 1 |
| 24-104 | LG 973 | X | 1 |
| 24-200 | LG 972 | X | 1 |
| 24-200-B | | X | 6 |
| 24-200-C | LG 972 | D | |
| 24-250 | LG 972 | X | 1 |
| 24-250-B | | X | 6 |
| 24-250-C | LG 972 | D | |
| 24-275 | LG 972 | X | 1 |
| 24-280-03 | LG 973 | X | 1 |
| 24-280-10 | LG 973 | X | 1 |
| 24-280-25 | LG 973 | X | 1 |
| 24-295-03 | LG 973 | X | 1 |
| 24-295-10 | LG 973 | X | 1 |
| 24-295-25 | LG 973 | X | 1 |
| 24-500 | LG 972 | X | 1 |
| 24-500-B | | X | 1 |
| 24-518-03 | LG 973 | X | 1 |
| 24-518-10 | LG 973 | X | 11 |
| 24-518-25 | LG 973 | X | 1 |
| 24-550 | LG 972 | X | 1 |
| 24-595-03 | LG 973 | X | 1 |
| 24-595-10 | LG 973 | X | 1 |
| 24-595-25 | LG 973 | X | 1 |
| 24010E | SFS 96 | X | 6 |
| 26STD | SFS 22 | X | 1 |
| 27-001 | | X | 1 |
| 27-500 | LG 724 | X | 1 |
| 27-501 | LG 724 | X | 1 |
| 27-502 | LG 725 | X | 1 |
| 27-503 | LG 724 | X | 1 |
| 27-504 | LG 725 | X | 1 |
| 30-003 | LG 190 | X | 1 |
| 30-009 | LG 190 | X | 1 |
| 30-015 | LG 194 | X | 1 |
| 30-018 | LG 198 | X | 1 |
| 30-019 | LG 208 | X | 1 |
| 30-022 | LG 179 | X | 1 |
| 30-023 | LG 205 | X | 1 |
| 30-024 | LG 218 | X | 1 |
| 30-025 | LG 208 | X | 1 |
| 30-026 | LG 208 | X | 1 |
| 30-027 | LG 194 | X | 1 |
| 30-028 | LG 182 | X | 1 |
| 30-029 | LG 181 | X | 1 |
| 30-030 | LG 218 | X | 1 |
| 30-031 | LG 218 | X | 1 |
| 30-032 | LG 182 | X | 1 |
| 30-033 | LG 183 | X | 1 |
| 30-037 | LG 199 | X | 1 |
| 30-038 | LG 187 | X | 1 |
| 30-039 | LG 182 | X | 1 |
| 30-044 | LG 179 | X | 1 |
| 30-048 | LG 182 | X | 1 |
| 30-049 | LG 181 | X | 1 |
| 30-054 | LG 200 | X | 1 |
| 30-055 | LG 204 | X | 1 |
| 30-056 | LG 208 | X | 1 |
| 30-057 | LG 200 | X | 1 |
| 30-064 | LG 194 | X | 1 |
| 30-066 | | X | 1 |
| 30-067 | LG 212 | X | 1 |
| 30-068 | LG 212 | X | 1 |
| 30-070 | LG 216 | X | 1 |
| 30-073 | LG 183 | X | 1 |
| 30-074 | LG 183 | X | 1 |
| 30-075 | LG 185 | X | 1 |
| 30-076 | LG 188 | X | 1 |
| 30-077 | LG 188 | X | 1 |
| 30-080 | LG 205 | X | 1 |
| 30-081 | LG 205 | X | 1 |
| 30-082 | LG 205 | X | 1 |
| 30-083 | LG 219 | X | 1 |
| 30-085 | LG 203 | X | 1 |
| 30-087 | LG 182 | X | 1 |
| 30-088 | LG 203 | X | 1 |
| 30-089 | LG 204 | X | 1 |
| 30-091 | LG 217 | X | 1 |
| 30-093 | LG 206 | X | 1 |
| 30-094 | LG 180 | X | 1 |
| 30-095 | LG 206 | X | 1 |
| 30-097 | LG 179 | X | 1 |
| 30-098 | LG 206 | X | 1 |
| 30-100 | LG 217 | X | 1 |
| 30-101 | LG 179 | X | 1 |
| 30-102 | LG 220 | X | 1 |
| 30-104 | LG 180 | X | 1 |
| 30-105 | LG 179 | X | 1 |
| 30-106 | LG 179 | X | 1 |
| 30-107 | LG 180 | X | 1 |
| 30-108 | LG 180 | X | 1 |
| 30-111 | LG 217 | X | 1 |
| 30-112 | LG 218 | X | 1 |
| 30-116 | LG 219 | X | 1 |
| 30-117 | LG 219 | X | 1 |
| 30-119 | LG 191 | X | 1 |
| 30-121 | LG 190 | X | 1 |
| 30-122 | LG 183 | X | 1 |
| 30-123 | LG 183 | X | 1 |
| 30-124 | LG 197 | X | 1 |
| 30-125 | LG 206 | X | 1 |
| 30-130 | LG 205 | X | 1 |
| 30-132 | LG 179 | X | 1 |
| 30-134 | LG 180 | X | 1 |
| 30-135 | LG 182 | X | 1 |
| 30-136 | LG 182 | X | 1 |
| 30-137 | LG 214 | X | 1 |
| 30-139 | LG 183 | X | 1 |
| 30-141 | LG 217 | X | 1 |
| 30-142 | LG 217 | X | 1 |
| 30-145 | LG 184 | X | 1 |
| 30-148 | LG 198 | X | 1 |
| 30-149 | LG 211 | X | 1 |
| 30-153 | LG 216 | X | 1 |
| 30-154 | LG 213 | X | 1 |
| 30-155 | LG 213 | X | 1 |
| 30-156 | LG 213 | X | 1 |
| 30-157 | LG 201 | X | 1 |
| 30-158 | LG 201 | X | 1 |
| 30-159 | LG 205 | X | 1 |
| 30-161 | LG 184 | X | 1 |
| 30-162 | LG 222 | X | 1 |
| 30-163 | LG 200 | X | 1 |
| 30-164 | LG 200 | X | 1 |
| 30-165 | LG 204 | X | 1 |

N = New Item
F = NLA after inventories are sold

D = Discontinued after 2019 catalog
X = Active part number

# 2019 Numerical Index

| OREGON | Page | Code | Pk. |
|---|---|---|---|
| 30-166 | LG 210 | X | 1 |
| 30-167 | LG 184 | X | 1 |
| 30-168 | LG 185 | X | 1 |
| 30-170 | LG 198 | X | 1 |
| 30-172 | LG 184 | X | 1 |
| 30-173 | LG 184 | X | 1 |
| 30-181 | LG 189 | X | 1 |
| 30-182 | LG 185 | X | 1 |
| 30-183 | LG 189 | X | 1 |
| 30-184 | LG 186 | X | 1 |
| 30-185 | LG 203 | X | 1 |
| 30-186 | LG 184 | X | 1 |
| 30-187 | LG 192 | X | 1 |
| 30-188 | | X | 1 |
| 30-189 | LG 207 | X | 1 |
| 30-190 | LG 207 | X | 1 |
| 30-205 | LG 219 | X | 1 |
| 30-206 | LG 192 | N | 1 |
| 30-207 | LG 210 | N | 1 |
| 30-208 | LG 188 | N | 1 |
| 30-209 | LG 210 | N | 1 |
| 30-210 | LG 189 | N | 1 |
| 30-211 | LG 179 | N | 1 |
| 30-212 | LG 203 | N | 1 |
| 30-215 | LG 681 | N | 1 |
| 30-216 | LG 681 | N | 1 |
| 30-218 | LG 681 | N | 1 |
| 30-220 | LG 213 | N | 1 |
| 30-221 | LG 213 | N | 1 |
| 30-222 | LG 216 | N | 1 |
| 30-223 | LG 213 | N | 1 |
| 30-224 | LG 200 | N | 1 |
| 30-225 | LG 203 | N | 1 |
| 30-301 | LG 217 | X | 1 |
| 30-303 | LG 198 | X | 1 |
| 30-304 | LG 199 | X | 1 |
| 30-305 | LG 198 | X | 1 |
| 30-309 | LG 199 | X | 1 |
| 30-311 | LG 199 | X | 1 |
| 30-313 | LG 201 | X | 1 |
| 30-316 | LG 208 | X | 1 |
| 30-317 | LG 194 | X | 1 |
| 30-318 | LG 193 | X | 1 |
| 30-321 | LG 199 | X | 1 |
| 30-322 | LG 200 | X | 1 |
| 30-325 | LG 199 | X | 1 |
| 30-327 | LG 199 | X | 1 |
| 30-328 | LG 200 | X | 1 |
| 30-329 | LG 202 | X | 1 |
| 30-331 | LG 203 | X | 1 |
| 30-332 | LG 196 | X | 1 |
| 30-333 | LG 216 | X | 1 |
| 30-334 | LG 196 | X | 1 |
| 30-337 | LG 213 | X | 1 |
| 30-345 | LG 195 | X | 1 |
| 30-346 | LG 195 | X | 1 |
| 30-347 | LG 194 | X | 1 |
| 30-365 | LG 1025 | N | 1 |
| 30-400 | LG 193 | X | 1 |
| 30-401 | LG 193 | X | 1 |
| 30-403 | LG 192 | X | 1 |
| 30-404 | LG 192 | X | 1 |
| 30-405 | LG 193 | X | 1 |
| 30-406 | LG 193 | X | 1 |
| 30-410 | LG 220 | X | 1 |
| 30-412 | LG 220 | X | 1 |
| 30-413 | LG 221 | X | 1 |
| 30-414 | LG 221 | X | 1 |
| 30-415 | | X | 1 |
| 30-416 | LG 214 | X | 1 |
| 30-417 | LG 193 | X | 1 |

| OREGON | Page | Code | Pk. |
|---|---|---|---|
| 30-418 | LG 221 | X | 1 |
| 30-419 | LG 221 | X | 1 |
| 30-421 | LG 220 | X | 1 |
| 30-423 | LG 221 | X | 1 |
| 30-430 | LG 211 | X | 1 |
| 30-432 | | X | 1 |
| 30-436 | LG 194 | X | 1 |
| 30-437 | LG 192 | X | 1 |
| 30-438 | LG 196 | X | 1 |
| 30-439-1 | LG 190 | X | 1 |
| 30-441 | LG 202 | X | 1 |
| 30-443 | LG 218 | X | 1 |
| 30-444 | LG 187 | X | 1 |
| 30-445 | LG 189 | X | 1 |
| 30-446 | LG 188 | X | 1 |
| 30-447 | LG 186 | X | 1 |
| 30-448 | LG 188 | X | 1 |
| 30-449 | LG 188 | X | 1 |
| 30-450 | LG 189 | X | 1 |
| 30-451 | LG 196 | X | 1 |
| 30-452 | LG 195 | X | 1 |
| 30-453 | LG 195 | X | 1 |
| 30-454 | LG 195 | X | 1 |
| 30-455 | LG 196 | X | 1 |
| 30-456 | LG 201 | X | 1 |
| 30-457 | LG 202 | X | 1 |
| 30-458 | LG 207 | X | 1 |
| 30-459 | LG 207 | X | 1 |
| 30-460 | LG 207 | X | 1 |
| 30-498 | LG 210 | N | 1 |
| 30-506 | LG 195 | X | 1 |
| 30-527 | LG 202 | X | 1 |
| 30-605 | LG 204 | N | 1 |
| 30-606 | LG 204 | N | 1 |
| 30-608 | LG 207 | N | 1 |
| 30-609 | LG 204 | N | 1 |
| 30-610 | LG 210 | N | 1 |
| 30-611 | LG 210 | N | 1 |
| 30-612 | LG 195 | N | 1 |
| 30-613 | LG 192 | N | 1 |
| 30-616 | LG 190 | N | 1 |
| 30-617 | LG 190 | N | 1 |
| 30-618 | LG 189 | N | 1 |
| 30-619 | LG 190 | N | 1 |
| 30-620 | LG 189 | N | 1 |
| 30-621 | LG 189 | N | 1 |
| 30-622 | LG 197 | N | 1 |
| 30-623 | LG 198 | N | 1 |
| 30-624 | LG 190 | N | 1 |
| 30-625 | LG 189 | N | 1 |
| 30-627 | LG 197 | N | 1 |
| 30-628 | LG 681 | N | 1 |
| 30-629 | LG 210 | N | 1 |
| 30-630 | LG 197 | N | 1 |
| 30-631 | LG 197 | N | 1 |
| 30-632 | LG 681 | N | 1 |
| 30-633 | LG 198 | N | 1 |
| 30-634 | LG 197 | N | 1 |
| 30-636 | LG 681 | N | 1 |
| 30-637 | LG 197 | N | 1 |
| 30-639 | LG 215 | N | 1 |
| 30-640 | LG 210 | N | 1 |
| 30-641 | LG 198 | N | 1 |
| 30-642 | LG 214 | N | 1 |
| 30-643 | LG 215 | N | 1 |
| 30-644 | LG 215 | N | 1 |
| 30-645 | LG 197 | N | 1 |
| 30-646 | LG 681 | N | 1 |
| 30-648 | LG 197 | N | 1 |
| 30-649 | LG 1025 | N | 1 |
| 30-650 | LG 221 | N | 1 |

| OREGON | Page | Code | Pk. |
|---|---|---|---|
| 30-651 | | N | 1 |
| 30-652 | LG 212 | N | 1 |
| 30-653 | LG 216 | N | 1 |
| 30-655 | LG 191 | N | 1 |
| 30-656 | LG 191 | N | 1 |
| 30-657 | LG 220 | N | 1 |
| 30-658 | | N | 1 |
| 30-700 | LG 180 | X | 1 |
| 30-702 | LG 185 | X | 1 |
| 30-703 | LG 192 | X | 1 |
| 30-704 | LG 194 | X | 1 |
| 30-705 | LG 200 | X | 1 |
| 30-706 | LG 201 | X | 1 |
| 30-708 | LG 204 | X | 1 |
| 30-709 | LG 194 | X | 1 |
| 30-710 | LG 181 | X | 1 |
| 30-711 | LG 218 | X | 1 |
| 30-712 | LG 205 | X | 1 |
| 30-713 | LG 221 | X | 1 |
| 30-717 | LG 221 | X | 1 |
| 30-719 | LG 212 | X | 1 |
| 30-720 | LG 180 | X | 1 |
| 30-721 | LG 213 | X | 1 |
| 30-731 | LG 180 | X | 1 |
| 30-735 | LG 181 | X | 1 |
| 30-736 | LG 185 | X | 1 |
| 30-740 | LG 218 | X | 1 |
| 30-758 | LG 209 | X | 1 |
| 30-761 | LG 183 | X | 1 |
| 30-762 | LG 183 | X | 1 |
| 30-800 | LG 181 | X | 1 |
| 30-801 | LG 217 | X | 1 |
| 30-802 | LG 192 | X | 1 |
| 30-803 | LG 181 | X | 1 |
| 30-804 | LG 199 | X | 1 |
| 30-805 | LG 193 | X | 1 |
| 30-806 | LG 193 | X | 1 |
| 30-807 | LG 218 | X | 1 |
| 30-808 | LG 193 | X | 1 |
| 30-809 | LG 179 | X | 1 |
| 30-810 | LG 198 | X | 1 |
| 30-811 | LG 180 | X | 1 |
| 30-812 | LG 206 | X | 1 |
| 30-813 | LG 180 | X | 1 |
| 30-814 | LG 199 | X | 1 |
| 30-815 | LG 203 | X | 1 |
| 30-816 | LG 193 | X | 1 |
| 30-817 | LG 218 | X | 1 |
| 30-818 | LG 206 | X | 1 |
| 30-819 | LG 205 | X | 1 |
| 30-820 | LG 182 | X | 1 |
| 30-821 | LG 181 | X | 1 |
| 30-822 | LG 216 | X | 1 |
| 30-823 | LG 182 | X | 1 |
| 30-824 | LG 183 | X | 1 |
| 30-825 | LG 179 | X | 1 |
| 30-826 | LG 181 | X | 1 |
| 30-827 | LG 180 | X | 1 |
| 30-828 | LG 194 | X | 1 |
| 30-829 | LG 183 | X | 1 |
| 30-830 | LG 191 | X | 1 |
| 30-831 | LG 190 | X | 1 |
| 30-832 | LG 194 | X | 1 |
| 30-833 | LG 200 | X | 1 |
| 30-834 | LG 203 | X | 1 |
| 30-835 | LG 200 | X | 1 |
| 30-836 | LG 680 | X | 1 |
| 30-837 | LG 214 | X | 1 |
| 30-838 | LG 215 | X | 1 |
| 30-839 | LG 215 | X | 1 |
| 30-840 | LG 218 | X | 1 |



N = New Item
F = NLA after inventories are sold

D = Discontinued after 2019 catalog
X = Active part number

| OREGON | Page | Code | Pk. |
|---|---|---|---|
| 30-841 | LG 217 | X | 1 |
| 30-842 | LG 217 | X | 1 |
| 30-843 | LG 194 | X | 1 |
| 30-844 | LG 204 | X | 1 |
| 30-845 | LG 208 | X | 1 |
| 30-846 | LG 211 | X | 1 |
| 30-847 | LG 205 | X | 1 |
| 30-848 | LG 206 | X | 1 |
| 30-849 | LG 204 | X | 1 |
| 30-850 | LG 218 | X | 1 |
| 30-851 | LG 184 | X | 1 |
| 30-852 | LG 184 | X | 1 |
| 30-853 | LG 213 | X | 1 |
| 30-903 | LG 186 | X | 1 |
| 30-906 | LG 185 | X | 1 |
| 30-907 | LG 186 | X | 1 |
| 30-908 | LG 185 | X | 1 |
| 30-909 | LG 186 | X | 1 |
| 30-910 | LG 186 | X | 1 |
| 30-911 | | X | 1 |
| 30-913 | LG 185 | X | 1 |
| 30-914 | LG 187 | X | 1 |
| 30-915 | LG 187 | X | 1 |
| 30-916 | LG 185 | X | 1 |
| 30-917 | LG 186 | X | 1 |
| 30-919 | LG 188 | X | 1 |
| 30-920 | LG 186 | X | 1 |
| 30-921 | LG 202 | X | 1 |
| 30-923 | LG 186 | X | 1 |
| 30-924 | LG 186 | X | 1 |
| 30-925 | LG 187 | X | 1 |
| 30-926 | LG 187 | X | 1 |
| 30-927 | LG 187 | X | 1 |
| 30-928 | | X | 1 |
| 30-929 | LG 187 | X | 1 |
| 30-930 | LG 187 | X | 1 |
| 30-931 | LG 191 | X | 1 |
| 30-932 | LG 196 | X | 1 |
| 30-933 | LG 195 | X | 1 |
| 30-934 | LG 195 | X | 1 |
| 30-935 | LG 201 | X | 1 |
| 30-936 | LG 202 | X | 1 |
| 30-937 | LG 202 | X | 1 |
| 30-938 | LG 202 | X | 1 |
| 30-939 | LG 202 | X | 1 |
| 30-940 | LG 202 | X | 1 |
| 30-941 | LG 219 | X | 1 |
| 30-942 | LG 206 | X | 1 |
| 30-943 | LG 206 | X | 1 |
| 30-944 | LG 207 | X | 1 |
| 30-945 | LG 207 | X | 1 |
| 30-946 | LG 207 | X | 1 |
| 30-947 | LG 207 | X | 1 |
| 30-949 | LG 209 | X | 1 |
| 30-950 | LG 209 | X | 1 |
| 30-951 | LG 219 | X | 1 |
| 30-952 | LG 219 | X | 1 |
| 30-953 | LG 211 | X | 1 |
| 30-954 | LG 220 | X | 1 |
| 30-955 | LG 212 | X | 1 |
| 30-956 | LG 216 | X | 1 |
| 30-957 | LG 209 | X | 1 |
| 30-959 | LG 219 | X | 1 |
| 30-960 | LG 187 | X | 1 |
| 30-961 | LG 187 | X | 1 |
| 30-962 | LG 188 | X | 1 |
| 30-963 | LG 195 | X | 1 |
| 30-964 | LG 212 | X | 1 |
| 30-965 | LG 212 | X | 1 |
| 30-966 | LG 203 | X | 1 |
| 30-968 | LG 222 | X | 1 |

| OREGON | Page | Code | Pk. |
|---|---|---|---|
| 30-974 | LG 188 | X | 1 |
| 30-975 | LG 188 | X | 1 |
| 3010E | SFS 89 | X | 1 |
| 30STD | SFS 22 | X | 1 |
| 31-002 | LG 933 | X | 1 |
| 31-004 | LG 929 | X | 10 |
| 31-006 | LG 935 | X | 1 |
| 31-010 | LG 935 | X | 1 |
| 31-011 | LG 931 | X | 1 |
| 31-013 | LG 928 | X | 1 |
| 31-014 | LG 934 | X | 1 |
| 31-020 | LG 923 | X | 1 |
| 31-023 | LG 933 | X | 1 |
| 31-025 | LG 930 | X | 1 |
| 31-026 | LG 928 | X | 1 |
| 31-027 | LG 931 | X | 1 |
| 31-028 | LG 928 | X | 1 |
| 31-032 | LG 928 | X | 1 |
| 31-034 | LG 933 | X | 1 |
| 31-037 | LG 928 | X | 1 |
| 31-041 | LG 932 | X | 1 |
| 31-047 | LG 925 | X | 1 |
| 31-049 | LG 923 | X | 1 |
| 31-050 | LG 924 | X | 1 |
| 31-051 | LG 924 | X | 1 |
| 31-052 | LG 923 | X | 1 |
| 31-054 | LG 924 | X | 1 |
| 31-056 | LG 927 | X | 1 |
| 31-057 | LG 930 | X | 1 |
| 31-058 | LG 931 | X | 1 |
| 31-060 | LG 922 | X | 1 |
| 31-061 | LG 922 | X | 1 |
| 31-062 | LG 922 | X | 1 |
| 31-063 | LG 932 | X | 1 |
| 31-064 | LG 931 | X | 1 |
| 31-065 | LG 922 | X | 1 |
| 31-066 | LG 923 | X | 1 |
| 31-067 | LG 935 | X | 1 |
| 31-068 | LG 922 | X | 1 |
| 31-070 | LG 922 | X | 1 |
| 31-071 | LG 923 | X | 1 |
| 31-072 | LG 923 | X | 1 |
| 31-074 | LG 923 | X | 1 |
| 31-075 | LG 923 | X | 1 |
| 31-081 | LG 936 | X | 1 |
| 31-083 | LG 930 | X | 1 |
| 31-087 | LG 930 | X | 1 |
| 31-090 | LG 930 | X | 1 |
| 31-091 | LG 930 | X | 1 |
| 31-092 | LG 931 | X | 1 |
| 31-093 | LG 932 | X | 10 |
| 31-094 | LG 932 | X | 1 |
| 31-100 | LG 929 | X | 10 |
| 31-103 | LG 933 | X | 1 |
| 31-105 | LG 934 | X | 1 |
| 31-108 | LG 931 | X | 1 |
| 31-109 | LG 929 | X | 1 |
| 31-114 | LG 936 | X | 1 |
| 31-115 | LG 934 | X | 1 |
| 31-116 | LG 925 | X | 1 |
| 31-117 | LG 925 | X | 1 |
| 31-119 | LG 924 | X | 1 |
| 31-120 | LG 924 | X | 1 |
| 31-121 | LG 924 | X | 1 |
| 31-140 | LG 937 | X | 1 |
| 31-142 | LG 937 | X | 1 |
| 31-150 | LG 937 | X | 1 |
| 31-152 | LG 937 | X | 1 |
| 31-160 | LG 937 | X | 1 |
| 31-180 | LG 937 | X | 1 |
| 31-230 | LG 937 | X | 1 |

| OREGON | Page | Code | Pk. |
|---|---|---|---|
| 31-232 | LG 937 | X | 1 |
| 31-240 | LG 937 | X | 1 |
| 31-242 | LG 937 | X | 1 |
| 31-250 | LG 937 | X | 1 |
| 31-252 | LG 937 | X | 1 |
| 31-260 | LG 937 | X | 1 |
| 31-540 | LG 937 | X | 1 |
| 31-542 | LG 937 | X | 1 |
| 31-550 | LG 937 | X | 1 |
| 31-552 | LG 937 | X | 1 |
| 31-604 | LG 937 | X | 1 |
| 31-635 | LG 937 | X | 1 |
| 31-642 | LG 937 | X | 1 |
| 31-650 | LG 937 | X | 1 |
| 31-732 | LG 937 | X | 1 |
| 31-740 | LG 937 | X | 1 |
| 31-742 | LG 937 | X | 1 |
| 31-750 | LG 937 | X | 1 |
| 31-752 | LG 937 | X | 1 |
| 31-760 | LG 937 | X | 1 |
| 31-900-0 | LG 929 | X | 1 |
| 31-904 | LG 930 | X | 10 |
| 31-907 | LG 929 | X | 1 |
| 31-908 | LG 929 | X | 1 |
| 31-909 | LG 928 | X | 1 |
| 31-910 | LG 929 | X | 1 |
| 31-911 | LG 929 | X | 1 |
| 31-912 | LG 929 | X | 1 |
| 31-913 | LG 930 | X | 1 |
| 31-914 | LG 930 | X | 1 |
| 31-918 | LG 922 | X | 1 |
| 31-919 | LG 922 | X | 1 |
| 31-920 | LG 922 | X | 1 |
| 32-100 | LG 676 | X | 1 |
| 32-101 | LG 676 | X | 1 |
| 32-103 | LG 676 | X | 1 |
| 32-105 | LG 676 | X | 1 |
| 32-106 | LG 676 | X | 1 |
| 32-107 | LG 676 | X | 1 |
| 32-108 | LG 676 | X | 1 |
| 32-110 | LG 676 | X | 1 |
| 32-111 | LG 676 | X | 1 |
| 32-112 | LG 676 | X | 1 |
| 32-114 | LG 676 | X | 1 |
| 32-116 | LG 676 | X | 1 |
| 33-002 | LG 946 | X | 1 |
| 33-003 | LG 926 | X | 1 |
| 33-005 | LG 927 | X | 1 |
| 33-006 | LG 927 | X | 1 |
| 33-007 | LG 926 | X | 1 |
| 33-008 | LG 789 | X | 1 |
| 33-013 | LG 949 | X | 1 |
| 33-015 | LG 948 | X | 1 |
| 33-016 | LG 789 | X | 1 |
| 33-019 | LG 948 | X | 1 |
| 33-021 | LG 950 | X | 1 |
| 33-023 | LG 949 | X | 1 |
| 33-024 | LG 945 | X | 1 |
| 33-026 | LG 947 | X | 1 |
| 33-027 | LG 947 | X | 1 |
| 33-028 | LG 947 | X | 1 |
| 33-029-1 | LG 927 | X | 1 |
| 33-031 | LG 742 | X | 10 |
| 33-032 | LG 742 | X | 10 |
| 33-033 | LG 742 | X | 10 |
| 33-034 | LG 742 | X | 10 |
| 33-035 | LG 742 | X | 10 |
| 33-038 | LG 742 | X | 1 |
| 33-053 | LG 789 | X | 1 |
| 33-070 | LG 742 | X | 1 |
| 33-074 | LG 944 | X | 1 |

N = New Item
F = NLA after inventories are sold

D = Discontinued after 2019 catalog
X = Active part number

# 2019 Numerical Index

| OREGON | Page | Code | Pk. |
|---|---|---|---|
| 33-081 | LG 946 | X | 1 |
| 33-082 | LG 946 | X | 1 |
| 33-083 | LG 947 | X | 1 |
| 33-084 | LG 948 | X | 1 |
| 33-085 | LG 948 | X | 1 |
| 33-086 | LG 948 | X | 1 |
| 33-089 | LG 946 | X | 1 |
| 33-090 | LG 948 | X | 1 |
| 33-093 | LG 946 | X | 1 |
| 33-094 | LG 946 | X | 1 |
| 33-099 | LG 946 | X | 1 |
| 33-104 | LG 735 | X | 1 |
| 33-105 | LG 943 | X | 1 |
| 33-106 | LG 943 | X | 1 |
| 33-110 | LG 735 | X | 1 |
| 33-111 | LG 735 | X | 1 |
| 33-112 | LG 735 | X | 1 |
| 33-113 | LG 740 | X | 1 |
| 33-114 | LG 734 | X | 1 |
| 33-115 | LG 738 | X | 1 |
| 33-116 | LG 735 | X | 1 |
| 33-117 | LG 733 | X | 1 |
| 33-118-1 | LG 733 | X | 1 |
| 33-119-1 | LG 734 | X | 1 |
| 33-120 | LG 734 | X | 1 |
| 33-121 | LG 734 | X | 1 |
| 33-122-1 | LG 734 | X | 1 |
| 33-124 | LG 736 | X | 1 |
| 33-125-1 | LG 736 | X | 1 |
| 33-126-1 | LG 736 | X | 1 |
| 33-127 | LG 737 | X | 1 |
| 33-128-1 | LG 741 | X | 1 |
| 33-130 | LG 733 | X | 1 |
| 33-132 | LG 735 | X | 1 |
| 33-133 | LG 736 | X | 1 |
| 33-134 | LG 736 | X | 1 |
| 33-135 | LG 737 | X | 1 |
| 33-136 | LG 737 | X | 1 |
| 33-137 | LG 737 | X | 1 |
| 33-138 | LG 738 | X | 1 |
| 33-139 | LG 736 | X | 1 |
| 33-150 | LG 787 | X | 1 |
| 33-151 | LG 785 | X | 1 |
| 33-152 | LG 942 | X | 1 |
| 33-153 | LG 737 | X | 1 |
| 33-154 | LG 741 | X | 1 |
| 33-155 | LG 738 | X | 1 |
| 33-156 | LG 738 | X | 1 |
| 33-157 | LG 738 | X | 1 |
| 33-158 | LG 949 | X | 1 |
| 33-159 | LG 733 | X | 1 |
| 33-180 | LG 949 | X | 1 |
| 33-182-0 | LG 789 | X | 1 |
| 33-183 | LG 735 | X | 1 |
| 33-184 | LG 737 | X | 1 |
| 33-185 | LG 737 | X | 1 |
| 33-186 | LG 789 | X | 1 |
| 33-187 | LG 738 | X | 1 |
| 33-188 | LG 738 | X | 1 |
| 33-189 | LG 740 | X | 1 |
| 33-190 | LG 741 | X | 1 |
| 33-200 | LG 866 | X | 1 |
| 33-201 | LG 867 | X | 10 |
| 33-204 | LG 787 | X | 1 |
| 33-206 | LG 949 | X | 1 |
| 33-207 | LG 949 | X | 1 |
| 33-208 | LG 866 | X | 1 |
| 33-210 | LG 867 | X | 10 |
| 33-213 | LG 787 | X | 1 |
| 33-215 | LG 866 | X | 1 |
| 33-216 | LG 866 | X | 1 |

| OREGON | Page | Code | Pk. |
|---|---|---|---|
| 33-240 | LG 948 | X | 1 |
| 33-242 | LG 729 | X | 1 |
| 33-243 | LG 786 | X | 1 |
| 33-244 | LG 786 | X | 1 |
| 33-245 | LG 786 | X | 1 |
| 33-246 | LG 732 | X | 1 |
| 33-247 | LG 731 | X | 1 |
| 33-248 | LG 731 | X | 1 |
| 33-249 | LG 731 | X | 1 |
| 33-253 | LG 731 | X | 1 |
| 33-254 | LG 785 | X | 1 |
| 33-255 | LG 736 | X | 1 |
| 33-256 | LG 946 | X | 1 |
| 33-261 | LG 733 | X | 1 |
| 33-263 | LG 739 | X | 1 |
| 33-264 | LG 739 | X | 1 |
| 33-265 | LG 739 | X | 1 |
| 33-266 | LG 739 | X | 1 |
| 33-267 | LG 739 | X | 1 |
| 33-269 | LG 739 | X | 1 |
| 33-270 | LG 739 | X | 1 |
| 33-271 | LG 739 | X | 1 |
| 33-272 | LG 740 | X | 1 |
| 33-273 | LG 740 | X | 1 |
| 33-274 | LG 740 | X | 1 |
| 33-275 | LG 740 | X | 1 |
| 33-276 | LG 740 | X | 1 |
| 33-277 | LG 740 | X | 1 |
| 33-301 | LG 743 | X | 10 |
| 33-302 | LG 743 | X | 10 |
| 33-307 | LG 743 | X | 10 |
| 33-312 | LG 743 | X | 10 |
| 33-313 | LG 743 | X | 10 |
| 33-317-0 | LG 729 | X | 1 |
| 33-318-0 | LG 729 | X | 1 |
| 33-319-0 | LG 729 | X | 1 |
| 33-320-0 | LG 731 | X | 1 |
| 33-330 | LG 729 | X | 1 |
| 33-331 | LG 730 | X | 1 |
| 33-332 | LG 730 | X | 1 |
| 33-333 | LG 786 | X | 1 |
| 33-334 | LG 730 | X | 1 |
| 33-335 | LG 730 | X | 1 |
| 33-336 | LG 730 | X | 1 |
| 33-337 | LG 730 | X | 1 |
| 33-340 | LG 784 | X | 1 |
| 33-341 | LG 784 | X | 1 |
| 33-342 | LG 784 | X | 1 |
| 33-343 | LG 787 | X | 1 |
| 33-344 | LG 784 | X | 1 |
| 33-345 | LG 784 | X | 1 |
| 33-346 | LG 786 | X | 1 |
| 33-347 | LG 784 | X | 1 |
| 33-348 | LG 785 | X | 1 |
| 33-350 | LG 949 | X | 1 |
| 33-351 | LG 949 | X | 10 |
| 33-352-0 | LG 784 | X | 1 |
| 33-353 | LG 785 | X | 1 |
| 33-362 | LG 784 | X | 1 |
| 33-363 | LG 787 | X | 1 |
| 33-365 | LG 784 | X | 1 |
| 33-375 | LG 942 | X | 1 |
| 33-376 | LG 942 | X | 1 |
| 33-377 | LG 943 | X | 1 |
| 33-379 | LG 945 | X | 1 |
| 33-382 | LG 947 | X | 1 |
| 33-383 | LG 944 | X | 1 |
| 33-384 | LG 947 | X | 1 |
| 33-385 | LG 942 | X | 1 |
| 33-386 | LG 942 | X | 1 |
| 33-387 | LG 945 | X | 1 |

| OREGON | Page | Code | Pk. |
|---|---|---|---|
| 33-388 | LG 943 | X | 1 |
| 33-389 | LG 945 | X | 1 |
| 33-390 | | D | 1 |
| 33-391 | LG 945 | X | 1 |
| 33-392 | LG 944 | X | 1 |
| 33-393 | LG 943 | X | 1 |
| 33-394 | LG 944 | X | 1 |
| 33-395 | LG 943 | X | 1 |
| 33-396 | LG 944 | X | 1 |
| 33-397 | LG 942 | X | 1 |
| 33-398 | LG 944 | X | 1 |
| 33-399 | LG 944 | X | 1 |
| 33-400 | LG 732 | X | 1 |
| 33-401 | LG 732 | X | 1 |
| 33-402 | LG 731 | X | 1 |
| 33-407 | LG 732 | X | 1 |
| 33-410 | LG 947 | X | 1 |
| 33-411 | LG 732 | X | 1 |
| 33-414 | LG 741 | X | 1 |
| 33-415 | LG 741 | X | 1 |
| 33-417 | LG 731 | X | 1 |
| 33-418 | LG 731 | X | 1 |
| 33-419 | LG 732 | X | 1 |
| 33-420 | LG 741 | X | 1 |
| 33-430 | LG 729 | X | 1 |
| 33-431 | LG 729 | X | 1 |
| 33-500-0 | LG 744 | X | 1 |
| 33-502 | LG 743 | X | 1 |
| 33-516 | LG 866 | X | 1 |
| 33-518 | LG 785 | X | 1 |
| 33-519 | LG 785 | X | 1 |
| 33-520 | LG 785 | X | 1 |
| 33-521 | LG 785 | X | 1 |
| 33-522 | LG 785 | X | 1 |
| 33-525 | LG 786 | X | 1 |
| 33-526 | LG 928 | X | 1 |
| 33-527 | LG 928 | X | 1 |
| 33-540 | LG 950 | X | 1 |
| 33-541 | LG 950 | X | 1 |
| 33-542 | LG 950 | X | 1 |
| 33-601 | LG 789 | X | 1 |
| 33-606 | LG 789 | X | 1 |
| 33-628 | LG 789 | X | 1 |
| 33-700 | LG 915 | X | 1 |
| 33-702 | LG 919 | X | 1 |
| 33-704 | LG 919 | X | 1 |
| 33-707 | LG 920 | X | 1 |
| 33-708 | LG 915 | X | 1 |
| 33-709 | LG 916 | X | 1 |
| 33-710 | LG 918 | X | 1 |
| 33-711 | LG 921 | X | 1 |
| 33-712 | LG 921 | X | 1 |
| 33-713 | LG 921 | X | 1 |
| 33-714 | LG 918 | X | 1 |
| 33-715 | LG 919 | X | 1 |
| 33-716 | LG 921 | X | 1 |
| 33-718 | LG 919 | X | 1 |
| 33-719 | LG 915 | X | 1 |
| 33-720 | LG 920 | X | 1 |
| 33-721 | LG 920 | X | 1 |
| 33-722 | LG 918 | X | 1 |
| 33-728 | LG 917 | X | 1 |
| 33-729 | LG 917 | X | 1 |
| 33-730 | LG 917 | X | 1 |
| 33-732 | LG 920 | X | 1 |
| 33-733 | LG 917 | X | 1 |
| 33-734 | LG 917 | X | 1 |
| 33-735 | LG 917 | X | 1 |
| 33-738 | LG 921 | X | 1 |
| 33-739 | LG 921 | X | 1 |
| 33-740 | LG 916 | X | 1 |



N = New Item
F = NLA after inventories are sold

D = Discontinued after 2019 catalog
X = Active part number

| OREGON | Page | Code | Pk. |
|---|---|---|---|
| 33-741 | LG 917 | X | 1 |
| 33-742 | | X | 1 |
| 33-743 | LG 918 | X | 1 |
| 33-744 | LG 918 | X | 1 |
| 33-745 | LG 920 | X | 1 |
| 33-746 | LG 920 | X | 1 |
| 33-751 | LG 927 | X | 1 |
| 33-754 | LG 927 | X | 1 |
| 33-759-0 | LG 926 | X | 1 |
| 33-760-0 | LG 926 | X | 1 |
| 33-761 | LG 926 | X | 1 |
| 33-762-0 | LG 926 | X | 1 |
| 33-768-0 | LG 926 | X | 1 |
| 33-770 | LG 915 | X | 1 |
| 33-771 | LG 916 | X | 1 |
| 33-772 | LG 916 | X | 1 |
| 33-774 | LG 919 | X | 1 |
| 33-777 | LG 920 | X | 1 |
| 33-778 | LG 915 | X | 1 |
| 33-779 | LG 916 | X | 1 |
| 33-791 | LG 921 | X | 1 |
| 33-792 | LG 918 | X | 1 |
| 33-793 | LG 918 | X | 1 |
| 33-794 | LG 918 | X | 1 |
| 33-795 | LG 917 | X | 1 |
| 34-001 | LG 821 | X | 1 |
| 34-002 | LG 821 | X | 1 |
| 34-003 | LG 821 | X | 1 |
| 34-004 | LG 832 | X | 1 |
| 34-005 | LG 821 | X | 1 |
| 34-006 | LG 821 | X | 1 |
| 34-007 | LG 826 | X | 1 |
| 34-008 | LG 821 | X | 1 |
| 34-009 | LG 821 | X | 1 |
| 34-010 | LG 831 | X | 1 |
| 34-011 | LG 821 | X | 1 |
| 34-012 | LG 821 | X | 1 |
| 34-013 | LG 824 | X | 1 |
| 34-014 | LG 831 | X | 1 |
| 34-015 | LG 821 | X | 1 |
| 34-016 | LG 824 | X | 1 |
| 34-017 | LG 821 | X | 1 |
| 34-018 | LG 821 | X | 1 |
| 34-019 | LG 821 | X | 1 |
| 34-020 | LG 821 | X | 1 |
| 34-021 | LG 833 | X | 1 |
| 34-022 | LG 822 | X | 1 |
| 34-023 | LG 822 | X | 1 |
| 34-024 | LG 822 | X | 1 |
| 34-025 | LG 821 | X | 1 |
| 34-027 | LG 821 | X | 1 |
| 34-028 | LG 821 | X | 1 |
| 34-029 | LG 821 | X | 1 |
| 34-030 | LG 821 | X | 1 |
| 34-031 | LG 821 | X | 1 |
| 34-032 | LG 834 | X | 1 |
| 34-033 | LG 821 | X | 1 |
| 34-034 | LG 821 | X | 1 |
| 34-035 | LG 821 | X | 1 |
| 34-036 | LG 821 | X | 1 |
| 34-037 | LG 821 | X | 1 |
| 34-038 | LG 821 | X | 1 |
| 34-039 | LG 834 | X | 1 |
| 34-041 | LG 831 | X | 1 |
| 34-042 | LG 823 | X | 1 |
| 34-043 | LG 823 | X | 1 |
| 34-044 | LG 821 | X | 1 |
| 34-046 | LG 824 | X | 1 |
| 34-049 | LG 824 | X | 1 |
| 34-050 | LG 823 | X | 1 |
| 34-051 | LG 823 | X | 1 |

| OREGON | Page | Code | Pk. |
|---|---|---|---|
| 34-052 | LG 823 | X | 1 |
| 34-053 | LG 823 | X | 1 |
| 34-055 | LG 823 | X | 1 |
| 34-056 | LG 823 | X | 1 |
| 34-057 | LG 823 | X | 1 |
| 34-058 | LG 823 | X | 1 |
| 34-060 | LG 823 | X | 1 |
| 34-061 | LG 823 | X | 1 |
| 34-062 | LG 823 | X | 1 |
| 34-063 | LG 823 | X | 1 |
| 34-064 | LG 823 | X | 1 |
| 34-065 | LG 837 | X | 1 |
| 34-066 | LG 832 | X | 1 |
| 34-100 | LG 830 | X | 1 |
| 34-102 | LG 830 | X | 1 |
| 34-103 | LG 830 | X | 1 |
| 34-104 | LG 830 | X | 1 |
| 34-106 | LG 830 | X | 1 |
| 34-107 | LG 823 | X | 1 |
| 34-109 | LG 831 | X | 1 |
| 34-201 | LG 822 | X | 1 |
| 34-205 | LG 826 | X | 1 |
| 34-206 | LG 826 | X | 1 |
| 34-209 | LG 826 | X | 1 |
| 34-210 | LG 834 | X | 1 |
| 34-301 | LG 827 | N | 1 |
| 34-302 | LG 828 | N | 1 |
| 34-308 | LG 827 | N | 1 |
| 34-309 | LG 828 | N | 1 |
| 34-313 | LG 828 | N | 1 |
| 34-318 | LG 825 | N | 1 |
| 34-810 | LG 725 | X | 1 |
| 34-820 | LG 833 | X | 1 |
| 34-822 | LG 832 | X | 1 |
| 34-824 | LG 832 | X | 1 |
| 34-826 | LG 833 | X | 1 |
| 34-901 | LG 825 | N | 1 |
| 34-902 | LG 825 | N | 1 |
| 34-903 | LG 825 | N | 1 |
| 34-904 | LG 825 | N | 1 |
| 34-905 | LG 825 | N | 1 |
| 34-906 | LG 828 | N | 1 |
| 34-907 | | N | 1 |
| 34-908 | LG 828 | N | 1 |
| 35-001 | LG 806 | X | 1 |
| 35-002 | LG 806 | X | 1 |
| 35-003 | LG 809 | X | 1 |
| 35-004 | LG 806 | X | 1 |
| 35-005 | LG 806 | X | 1 |
| 35-006 | LG 808 | X | 1 |
| 35-007 | LG 806 | X | 1 |
| 35-008 | LG 808 | X | 1 |
| 35-010 | LG 809 | X | 1 |
| 35-012 | LG 806 | X | 1 |
| 35-014 | LG 806 | X | 1 |
| 35-015 | LG 810 | X | 1 |
| 35-016 | LG 809 | X | 1 |
| 35-021 | LG 810 | X | 1 |
| 35-022 | LG 807 | X | 1 |
| 35-023 | LG 806 | X | 1 |
| 35-026 | LG 807 | X | 1 |
| 35-027 | LG 807 | X | 1 |
| 35-028 | LG 810 | X | 1 |
| 35-032 | LG 809 | X | 1 |
| 35-033 | LG 809 | X | 1 |
| 35-034 | LG 807 | X | 1 |
| 35-036 | LG 807 | X | 1 |
| 35-037 | LG 808 | X | 1 |
| 35-038 | LG 808 | X | 1 |
| 35-041 | LG 808 | X | 1 |
| 35-043 | LG 808 | X | 1 |

| OREGON | Page | Code | Pk. |
|---|---|---|---|
| 35-044 | LG 808 | X | 1 |
| 35-045 | LG 808 | X | 1 |
| 35-050 | LG 809 | X | 1 |
| 35-543 | LG 807 | X | 1 |
| 36-001 | | D | 1 |
| 36-005 | LG 750 | X | 1 |
| 36-022 | LG 750 | X | 1 |
| 36-027 | LG 750 | X | 1 |
| 36-028 | LG 750 | X | 1 |
| 36-041 | LG 754 | X | 1 |
| 36-042 | LG 754 | X | 1 |
| 36-043 | LG 754 | X | 1 |
| 36-044 | LG 754 | X | 1 |
| 36-045 | LG 754 | X | 1 |
| 36-046 | LG 754 | X | 1 |
| 36-100 | LG 750 | X | 1 |
| 36-101 | LG 750 | X | 1 |
| 36-102 | LG 750 | X | 1 |
| 36-103 | LG 750 | X | 1 |
| 36-104 | LG 750 | X | 1 |
| 36-140 | LG 755 | X | 1 |
| 36-141 | LG 755 | X | 1 |
| 36-142 | LG 755 | X | 1 |
| 36-143 | LG 755 | X | 1 |
| 36-243 | LG 754 | X | 1 |
| 36-244 | LG 754 | X | 1 |
| 36-245 | LG 754 | X | 1 |
| 36-246 | LG 754 | X | 1 |
| 36-325 | LG 755 | X | 1 |
| 36-326 | LG 755 | X | 1 |
| 36-414 | LG 780 | N | 1 |
| 36-416 | LG 757 | N | 1 |
| 36-419 | LG 689 | N | 1 |
| 36-420 | LG 690 | N | 1 |
| 36-422 | LG 866 | N | 1 |
| 36-423 | LG 866 | N | 1 |
| 36-424 | LG 866 | N | 1 |
| 36-425 | LG 866 | N | 1 |
| 36-427 | LG 866 | N | 1 |
| 36-428 | LG 867 | N | 1 |
| 36-429 | | N | 1 |
| 36-521 | LG 755 | X | 1 |
| 36-522 | LG 755 | X | 1 |
| 36-523 | LG 755 | X | 1 |
| 36-524 | LG 755 | X | 1 |
| 36-530 | LG 755 | X | 1 |
| 36-531 | LG 755 | X | 1 |
| 36-535 | LG 755 | X | 1 |
| 37-619 | | D | 10 |
| 37-622 | | D | 10 |
| 37-624 | | D | 20 |
| 37-633 | | D | 1 |
| 37-638 | | D | 10 |
| 37-643 | | D | 5 |
| 37-645 | | D | 5 |
| 37-648 | | D | 20 |
| 37-654 | | D | 5 |
| 37-663 | | D | 5 |
| 37-664 | | D | 1 |
| 37-666 | | D | 1 |
| 37-669 | | D | 10 |
| 37-670 | | D | 10 |
| 37-671 | | D | 10 |
| 37-672 | | D | 10 |
| 37-673 | | D | 10 |
| 390-698 | LG 542 | X | 6 |
| 391-526 | LG 416 | X | 6 |
| 391-574 | LG 559 | X | 6 |
| 391-591 | LG 481 | X | 6 |
| 391-595 | LG 493 | X | 6 |
| 391-598 | LG 583 | X | 6 |

N = New Item
F = NLA after inventories are sold

D = Discontinued after 2019 catalog
X = Active part number

# 2019 Numerical Index

| OREGON | Page | Code | Pk. |
|---|---|---|---|
| 391-605 | LG 544 | X | 6 |
| 391-606 | LG 547 | X | 6 |
| 391-607 | LG 511 | X | 6 |
| 391-608 | LG 443 | X | 6 |
| 391-610 | LG 554 | X | 6 |
| 391-612 | LG 500 | X | 6 |
| 391-613 | LG 498 | X | 6 |
| 391-614 | LG 548 | X | 6 |
| 391-617 | LG 497 | X | 6 |
| 391-731 | LG 558 | X | 6 |
| 392-013 | LG 480 | X | 6 |
| 392-025 | LG 440 | X | 6 |
| 392-047 | LG 497 | X | 6 |
| 392-057 | LG 443 | X | 6 |
| 392-133 | LG 382 | X | 6 |
| 392-138 | LG 397 | X | 6 |
| 392-139 | LG 398 | X | 6 |
| 392-141 | LG 413 | X | 6 |
| 392-142 | LG 413 | X | 6 |
| 392-165 | LG 580 | X | 6 |
| 392-201 | LG 440 | X | 6 |
| 392-203 | LG 442 | X | 6 |
| 392-204 | LG 443 | X | 6 |
| 392-205 | LG 436 | X | 6 |
| 392-206 | LG 436 | X | 6 |
| 392-208 | LG 472 | X | 6 |
| 392-300 | LG 382 | X | 6 |
| 392-301 | LG 382 | X | 6 |
| 392-302 | LG 382 | X | 6 |
| 392-416 | LG 374 | X | 6 |
| 392-677 | LG 559 | X | 6 |
| 393-026 | LG 388 | X | 6 |
| 393-601 | LG 582 | X | 6 |
| 394-075 | LG 571 | X | 6 |
| 394-129 | LG 441 | X | 6 |
| 396-321 | LG 562 | X | 6 |
| 396-322 | LG 438 | X | 6 |
| 396-352 | LG 489 | X | 6 |
| 396-354 | LG 484 | X | 6 |
| 396-524 | LG 415 | X | 6 |
| 396-612 | LG 499 | X | 6 |
| 396-629 | LG 393 | X | 6 |
| 396-702 | LG 480 | X | 6 |
| 396-703 | LG 502 | X | 6 |
| 396-704 | LG 414 | X | 6 |
| 396-706 | LG 538 | X | 6 |
| 396-707 | LG 395 | X | 6 |
| 396-709 | LG 489 | X | 6 |
| 396-710 | LG 492 | X | 6 |
| 396-712 | LG 449 | X | 6 |
| 396-713 | LG 577 | X | 6 |
| 396-714 | LG 413 | X | 6 |
| 396-716 | LG 451 | X | 6 |
| 396-719 | LG 488 | X | 6 |
| 396-723 | LG 413 | X | 6 |
| 396-725 | LG 538 | X | 6 |
| 396-726 | LG 391 | X | 6 |
| 396-727 | LG 467 | X | 6 |
| 396-728 | LG 503 | X | 6 |
| 396-729 | LG 449 | X | 6 |
| 396-730 | LG 490 | X | 6 |
| 396-731 | LG 427 | X | 6 |
| 396-732 | LG 484 | X | 6 |
| 396-734 | LG 489 | X | 6 |
| 396-735 | LG 452 | X | 6 |
| 396-737 | LG 583 | X | 6 |
| 396-738 | LG 485 | X | 6 |
| 396-739 | LG 479 | X | 6 |
| 396-740 | LG 415 | X | 6 |
| 396-743 | LG 493 | X | 6 |
| 396-748 | LG 499 | X | 6 |

| OREGON | Page | Code | Pk. |
|---|---|---|---|
| 396-752 | LG 415 | X | 6 |
| 396-764 | LG 537 | X | 6 |
| 396-769 | LG 488 | X | 6 |
| 396-770 | LG 485 | X | 6 |
| 396-771 | LG 492 | X | 6 |
| 396-775 | LG 493 | X | 6 |
| 396-778 | LG 394 | X | 6 |
| 396-787 | LG 500 | X | 6 |
| 396-796 | LG 498 | X | 6 |
| 396-798 | LG 469 | X | 6 |
| 396-800 | LG 464 | X | 6 |
| 396-803 | LG 438 | X | 6 |
| 396-805 | LG 452 | X | 6 |
| 396-806 | LG 453 | X | 6 |
| 396-807 | LG 454 | X | 6 |
| 396-809 | LG 370 | X | 6 |
| 396-810 | LG 499 | X | 6 |
| 396-812 | LG 498 | X | 6 |
| 396-814 | LG 501 | X | 6 |
| 396-815 | LG 521 | X | 6 |
| 396-816 | LG 500 | X | 6 |
| 398-672 | LG 515 | X | 6 |
| 40-002 | LG 588 | X | 50 |
| 40-004 | LG 588 | X | 50 |
| 40-009 | LG 588 | X | 50 |
| 40-010 | LG 588 | X | 50 |
| 40-110 | LG 584 | X | 50 |
| 40-121 | LG 584 | X | 50 |
| 40-130 | LG 586 | X | 50 |
| 40-131 | LG 586 | X | 50 |
| 40-132 | LG 586 | X | 50 |
| 40-139 | LG 584 | X | 50 |
| 40-140 | LG 584 | X | 50 |
| 40-141 | LG 585 | X | 50 |
| 40-142 | LG 584 | X | 50 |
| 40-143 | LG 587 | X | 50 |
| 40-144 | LG 587 | X | 50 |
| 40-147 | LG 588 | X | 50 |
| 40-316 | LG 586 | X | 50 |
| 40-402 | LG 589 | X | 50 |
| 40-403 | LG 589 | X | 50 |
| 40-408 | LG 589 | X | 50 |
| 40-409 | LG 585 | X | 50 |
| 40-411 | LG 589 | X | 50 |
| 40-502 | LG 586 | X | 50 |
| 40-503 | LG 589 | X | 50 |
| 40-514 | LG 589 | X | 50 |
| 40-518 | LG 589 | X | 50 |
| 40-519 | LG 584 | X | 1 |
| 40-703 | LG 590 | X | 1 |
| 40-707 | LG 590 | X | 1 |
| 40-807 | LG 585 | X | 50 |
| 40-840 | LG 588 | X | 50 |
| 40-843 | LG 588 | X | 50 |
| 40-845 | LG 588 | X | 50 |
| 40-951 | LG 587 | X | 50 |
| 40092 | SFS 82 | X | 48 |
| 4020L | SFS 116 | X | 1 |
| 4020XL | SFS 116 | X | 1 |
| 4049H | | X | 12 |
| 4050T | SFS 92 | X | 10 |
| 4067V | SFS 83 | X | 12 |
| 4086KH | SFS 94 | X | 12 |
| 4090L | SFS 116 | X | 1 |
| 4090XL | SFS 116 | X | 1 |
| 41-005 | LG 728 | X | 1 |
| 41-008 | LG 590 | X | 1 |
| 41-899 | LG 590 | X | 1 |
| 41-920 | LG 1014 | X | 10 |
| 41-921 | LG 1014 | X | 10 |
| 41-922 | LG 1014 | X | 10 |

| OREGON | Page | Code | Pk. |
|---|---|---|---|
| 41-923 | LG 1014 | X | 10 |
| 41-924 | LG 1014 | X | 10 |
| 41-925 | LG 1014 | X | 10 |
| 41-926 | LG 1014 | X | 10 |
| 41-927 | LG 1014 | X | 10 |
| 41-928 | LG 1014 | X | 10 |
| 41-929 | LG 1014 | X | 10 |
| 41-930 | LG 1014 | X | 10 |
| 41-931 | LG 1014 | X | 10 |
| 41-932 | LG 1014 | X | 10 |
| 41-933 | LG 1014 | X | 10 |
| 41-935 | LG 1014 | X | 10 |
| 41-936 | LG 1014 | X | 10 |
| 41-937 | LG 1014 | X | 10 |
| 41-938 | LG 1014 | X | 20 |
| 41-939 | LG 1014 | X | 20 |
| 4117D | SFS 94 | X | 1 |
| 4120H | SFS 92 | X | 12 |
| 4126P | SFS 94 | X | 12 |
| 42-001 | LG 744 | X | 1 |
| 42-005 | LG 744 | X | 12 |
| 42-007 | LG 744 | X | 12 |
| 42-008 | LG 945 | X | 10 |
| 42-009 | LG 945 | X | 1 |
| 42-031 | SFS 65 | X | 1 |
| 42-032 | SFS 74 | X | 1 |
| 42-041 | SFS 76 | X | 1 |
| 42-043 | SFS 74 | X | 1 |
| 42-044 | SFS 74 | X | 1 |
| 42-047 | SFS 63 | X | 1 |
| 42-050 | SFS 77 | X | 1 |
| 42-061 | LG 1018 | N | 1 |
| 42-063 | SFS 74 | X | 1 |
| 42-064 | SFS 75 | X | 1 |
| 42-066 | SFS 77 | X | 1 |
| 42-073 | SFS 65 | X | 1 |
| 42-079 | SFS 78 | X | 1 |
| 42-080 | LG 742 | X | 1 |
| 42-081 | LG 742 | X | 1 |
| 42-086 | | X | 1 |
| 42-087 | SFS 65 | X | 1 |
| 42-090 | SFS 64 | X | 1 |
| 42-091 | SFS 64 | X | 1 |
| 42-095 | SFS 64 | X | 30 |
| 42-100 | SFS 63 | X | 1 |
| 42-115-0 | | X | 1 |
| 42-130 | SFS 118 | X | 10 |
| 42-131 | SFS 118 | X | 10 |
| 42-132 | SFS 118 | X | 10 |
| 42-133 | SFS 118 | X | 10 |
| 42-134 | SFS 118 | X | 10 |
| 42-135 | SFS 119 | X | 10 |
| 42-136 | SFS 118 | X | 10 |
| 42-137 | SFS 119 | X | 10 |
| 42-138 | SFS 119 | X | 10 |
| 42-139 | SFS 119 | X | 10 |
| 42-141 | SFS 117 | X | 10 |
| 42-142 | SFS 117 | X | 10 |
| 42-143 | SFS 117 | X | 10 |
| 42-144 | SFS 117 | X | 10 |
| 42-149 | SFS 21 | X | 1 |
| 42-152 | SFS 119 | X | 10 |
| 42-160 | SFS 120 | X | 1 |
| 42-161 | SFS 120 | X | 1 |
| 42-162 | SFS 120 | X | 1 |
| 42-163 | SFS 119 | X | 10 |
| 42-171 | | X | 1 |
| 42-172 | SFS 78 | X | 1 |
| 42-173 | SFS 78 | X | 1 |
| 42-174 | SFS 78 | X | 1 |
| 42-175 | SFS 78 | X | 1 |



N = New Item
F = NLA after inventories are sold

D = Discontinued after 2019 catalog
X = Active part number

| OREGON | Page | Code | Pk. |
|---|---|---|---|
| 42-176 | SFS 78 | X | 1 |
| 42-178 | SFS 78 | X | 1 |
| 42-179 | | X | 1 |
| 42-183 | SFS 78 | X | 1 |
| 42-184 | | X | 1 |
| 42-185 | | X | 1 |
| 42-187 | SFS 78 | X | 1 |
| 42-188 | SFS 78 | X | 1 |
| 42-189 | SFS 75 | X | 1 |
| 42-192 | SFS 78 | X | 1 |
| 42-195 | SFS 78 | X | 1 |
| 42-196 | SFS 74 | X | 1 |
| 42-199 | SFS 75 | X | 1 |
| 42-204 | SFS 75 | X | 1 |
| 42-205 | | X | 1 |
| 42-206 | SFS 78 | X | 1 |
| 42-207 | SFS 76 | X | 1 |
| 42-208 | SFS 76 | X | 1 |
| 42-215 | SFS 21 | X | 10 |
| 42-217 | SFS 66 | X | 1 |
| 42-218 | SFS 78 | X | 1 |
| 42-219 | LG 42 | X | 1 |
| 42-301 | SFS 66 | X | 1 |
| 42-311 | SFS 66 | X | 1 |
| 42-333 | SFS 66 | X | 1 |
| 42-411 | SFS 65 | X | 1 |
| 42-422 | SFS 65 | X | 1 |
| 42-423 | SFS 67 | X | 1 |
| 42-424 | SFS 66 | X | 1 |
| 42-427-0 | SFS 66 | X | 1 |
| 42-430-0 | SFS 64 | X | 1 |
| 42-431-0 | SFS 64 | X | 1 |
| 42-432-0 | SFS 64 | X | 1 |
| 42-434-0 | SFS 64 | X | 1 |
| 42-441 | SFS 65 | X | 1 |
| 42-446-0 | SFS 65 | X | 1 |
| 42-450-0 | SFS 67 | X | 1 |
| 42-452 | LG 867 | X | 1 |
| 42-455 | LG 721 | X | 1 |
| 42-480-0 | SFS 66 | X | 1 |
| 42-505-0 | SFS 65 | X | 1 |
| 42-516 | SFS 67 | X | 1 |
| 42-550 | | X | 1 |
| 42-551 | | X | 1 |
| 42-552 | | X | 1 |
| 42-555 | LG 803 | X | 1 |
| 42-557 | LG 803 | X | 1 |
| 42-560-0 | SFS 121 | X | 1 |
| 42-561-0 | SFS 121 | X | 1 |
| 42-961 | SFS 67 | X | 6 |
| 4205M | LG 761 | X | 12 |
| 4244M | SFS 93 | X | 12 |
| 43-011 | LG 935 | X | 1 |
| 43-012 | LG 927 | X | 10 |
| 43-014 | LG 932 | X | 1 |
| 43-018 | LG 936 | X | 1 |
| 43-019 | LG 931 | X | 1 |
| 43-021 | LG 934 | X | 1 |
| 43-025 | LG 913 | X | 1 |
| 43-034 | LG 934 | N | 1 |
| 43-035 | LG 913 | N | 1 |
| 43-037 | LG 927 | N | 1 |
| 43-075 | | D | 1 |
| 43-100 | LG 932 | X | 1 |
| 43-200 | LG 932 | X | 1 |
| 43-400-0 | LG 936 | X | 1 |
| 43-403 | LG 936 | X | 1 |
| 43-404 | LG 928 | X | 1 |
| 43-417 | LG 936 | X | 1 |
| 43-425 | LG 936 | X | 1 |
| 43-426 | LG 936 | X | 1 |

| OREGON | Page | Code | Pk. |
|---|---|---|---|
| 43-509 | LG 936 | X | 1 |
| 43-532 | LG 936 | X | 1 |
| 43-540 | LG 936 | X | 1 |
| 43-562 | LG 936 | X | 1 |
| 43-685 | LG 936 | X | 1 |
| 43-694 | LG 936 | X | 1 |
| 43-699 | LG 936 | X | 1 |
| 44-100 | LG 837 | X | 1 |
| 44-101 | LG 837 | X | 1 |
| 44-102 | LG 85 | X | 1 |
| 44-103 | LG 838 | X | 1 |
| 44-301 | LG 840 | X | 1 |
| 44-302 | LG 841 | X | 1 |
| 44-306 | LG 840 | X | 1 |
| 44-310 | LG 840 | X | 1 |
| 44-312 | LG 840 | X | 1 |
| 44-313 | LG 840 | X | 1 |
| 44-316 | LG 840 | X | 1 |
| 44-318 | LG 840 | X | 1 |
| 44-319 | LG 840 | X | 1 |
| 44-321 | LG 840 | X | 1 |
| 44-322 | LG 840 | X | 1 |
| 44-323 | LG 838 | X | 1 |
| 44-331 | LG 841 | X | 1 |
| 44-332 | LG 838 | X | 1 |
| 44-339 | LG 841 | X | 1 |
| 44-340 | LG 838 | X | 1 |
| 44-341 | LG 839 | X | 1 |
| 44-342 | LG 839 | X | 1 |
| 44-343 | LG 841 | X | 1 |
| 44-347 | LG 840 | X | 1 |
| 44-348 | LG 840 | X | 1 |
| 44-351 | LG 840 | X | 1 |
| 44-353 | LG 840 | X | 1 |
| 44-356 | LG 839 | X | 1 |
| 44-364 | LG 728 | X | 1 |
| 44-365 | LG 837 | X | 1 |
| 44-366 | LG 837 | X | 1 |
| 44-367 | LG 838 | X | 1 |
| 44-368 | LG 837 | X | 1 |
| 44-369 | LG 837 | X | 1 |
| 44-370 | LG 834 | X | 1 |
| 44-371 | LG 834 | X | 1 |
| 44-500 | LG 840 | X | 1 |
| 44-501 | LG 836 | X | 1 |
| 44-502 | LG 836 | X | 1 |
| 44-503 | LG 836 | X | 1 |
| 44-504 | LG 836 | X | 1 |
| 44-505 | LG 836 | X | 1 |
| 44-506 | LG 836 | X | 1 |
| 45-000 | LG 237 | X | 1 |
| 45-002 | LG 237 | X | 1 |
| 45-003 | LG 244 | X | 1 |
| 45-004 | LG 235 | X | 1 |
| 45-006 | LG 249 | X | 1 |
| 45-007 | LG 853 | X | 1 |
| 45-008 | LG 853 | X | 1 |
| 45-009 | LG 853 | X | 1 |
| 45-010 | LG 238 | X | 1 |
| 45-012 | LG 224 | X | 1 |
| 45-013 | LG 853 | X | 1 |
| 45-014 | LG 225 | X | 1 |
| 45-015 | LG 233 | X | 1 |
| 45-018 | LG 247 | X | 1 |
| 45-019 | LG 239 | X | 1 |
| 45-022 | LG 243 | X | 1 |
| 45-023 | LG 249 | X | 1 |
| 45-025 | LG 247 | X | 1 |
| 45-030 | LG 245 | X | 1 |
| 45-031 | LG 232 | X | 1 |
| 45-034 | LG 224 | X | 1 |

| OREGON | Page | Code | Pk. |
|---|---|---|---|
| 45-035 | LG 226 | X | 1 |
| 45-037 | LG 242 | X | 1 |
| 45-038 | LG 224 | X | 1 |
| 45-040 | LG 249 | X | 1 |
| 45-043 | LG 243 | X | 1 |
| 45-045 | LG 249 | X | 1 |
| 45-046 | LG 241 | X | 1 |
| 45-047 | LG 241 | X | 1 |
| 45-048 | LG 854 | X | 1 |
| 45-050 | LG 224 | X | 1 |
| 45-053 | LG 230 | X | 1 |
| 45-057 | LG 249 | X | 1 |
| 45-058 | LG 232 | X | 1 |
| 45-060 | LG 234 | X | 1 |
| 45-063 | LG 230 | X | 1 |
| 45-064 | LG 236 | X | 1 |
| 45-065 | LG 236 | X | 1 |
| 45-066 | LG 236 | X | 1 |
| 45-070 | LG 242 | X | 1 |
| 45-071 | LG 242 | X | 1 |
| 45-072 | LG 242 | X | 1 |
| 45-073 | LG 227 | X | 1 |
| 45-074 | LG 242 | X | 1 |
| 45-075 | LG 241 | X | 1 |
| 45-078 | LG 230 | X | 1 |
| 45-079 | LG 249 | X | 1 |
| 45-080 | LG 249 | X | 1 |
| 45-081 | LG 249 | X | 1 |
| 45-082 | LG 854 | X | 1 |
| 45-083 | LG 246 | X | 1 |
| 45-087 | LG 243 | X | 1 |
| 45-088 | LG 240 | X | 1 |
| 45-091 | LG 249 | X | 1 |
| 45-092 | LG 854 | X | 1 |
| 45-094 | LG 249 | X | 1 |
| 45-095 | LG 855 | X | 1 |
| 45-098 | LG 243 | X | 1 |
| 45-100 | LG 239 | X | 1 |
| 45-103 | LG 938 | X | 1 |
| 45-104 | LG 939 | X | 1 |
| 45-107 | LG 245 | X | 1 |
| 45-108 | LG 894 | X | 1 |
| 45-109 | LG 939 | X | 1 |
| 45-110 | LG 245 | X | 10 |
| 45-111 | LG 939 | X | 1 |
| 45-112 | LG 241 | X | 1 |
| 45-113 | LG 242 | X | 1 |
| 45-114 | LG 938 | X | 1 |
| 45-116 | LG 939 | X | 1 |
| 45-117 | LG 938 | X | 1 |
| 45-118 | LG 760 | X | 1 |
| 45-120 | | N | 1 |
| 45-121 | LG 230 | X | 1 |
| 45-124 | LG 938 | X | 1 |
| 45-127 | LG 244 | X | 1 |
| 45-128 | LG 228 | X | 1 |
| 45-130 | LG 232 | X | 1 |
| 45-132 | LG 939 | X | 1 |
| 45-135 | LG 894 | X | 1 |
| 45-142 | LG 939 | X | 1 |
| 45-143 | LG 939 | X | 1 |
| 45-144 | LG 941 | X | 1 |
| 45-145 | LG 804 | X | 1 |
| 45-146 | LG 804 | X | 1 |
| 45-188 | LG 230 | X | 1 |
| 45-205 | LG 228 | X | 1 |
| 45-206 | LG 231 | X | 1 |
| 45-207 | LG 236 | X | 1 |
| 45-208 | LG 245 | X | 1 |
| 45-209 | LG 246 | X | 1 |
| 45-216 | LG 224 | X | 1 |

N = New Item
F = NLA after inventories are sold

D = Discontinued after 2019 catalog
X = Active part number

# 2019 Numerical Index

| OREGON | Page | Code | Pk. |
|---|---|---|---|
| 45-220 | LG 232 | X | 1 |
| 45-225 | LG 232 | X | 1 |
| 45-227 | LG 234 | X | 1 |
| 45-234 | LG 224 | X | 1 |
| 45-241 | LG 224 | X | 1 |
| 45-242 | LG 243 | X | 1 |
| 45-243 | LG 243 | X | 1 |
| 45-244 | LG 224 | X | 1 |
| 45-245 | LG 224 | X | 1 |
| 45-249 | LG 224 | X | 1 |
| 45-250 | LG 243 | X | 1 |
| 45-253 | LG 224 | X | 1 |
| 45-254 | LG 224 | X | 1 |
| 45-255 | LG 224 | X | 1 |
| 45-256 | LG 224 | X | 1 |
| 45-257 | LG 245 | X | 1 |
| 45-258 | LG 224 | X | 1 |
| 45-259 | LG 224 | X | 1 |
| 45-260 | LG 224 | X | 1 |
| 45-263 | LG 224 | X | 1 |
| 45-264 | LG 224 | X | 1 |
| 45-266 | LG 247 | X | 1 |
| 45-267 | LG 235 | X | 1 |
| 45-268 | LG 227 | X | 1 |
| 45-269 | LG 227 | X | 1 |
| 45-270 | LG 227 | X | 1 |
| 45-271 | LG 227 | X | 1 |
| 45-272 | LG 227 | X | 1 |
| 45-273 | | X | 1 |
| 45-275 | LG 225 | X | 10 |
| 45-276 | LG 231 | X | 1 |
| 45-277 | LG 242 | X | 1 |
| 45-278 | LG 240 | X | 1 |
| 45-279 | LG 855 | X | 1 |
| 45-280 | LG 231 | X | 1 |
| 45-281 | LG 240 | X | 1 |
| 45-295 | LG 232 | X | 1 |
| 45-300 | LG 804 | X | 1 |
| 45-301 | LG 804 | X | 1 |
| 45-302 | LG 804 | X | 1 |
| 45-303 | LG 804 | X | 1 |
| 45-305 | LG 804 | X | 1 |
| 45-306 | LG 804 | X | 1 |
| 45-404 | LG 234 | X | 1 |
| 45-620 | LG 225 | X | 1 |
| 45-634 | LG 675 | X | 1 |
| 45-831 | LG 234 | X | 1 |
| 45-833 | LG 855 | X | 1 |
| 45-834 | LG 242 | X | 1 |
| 4510E | SFS 90 | X | 1 |
| 4521K | SFS 93 | X | 12 |
| 4525I | SFS 94 | X | 12 |
| 46-002 | LG 856 | X | 1 |
| 46-004 | LG 707 | X | 1 |
| 46-005 | LG 707 | X | 1 |
| 46-006 | LG 712 | X | 1 |
| 46-024 | LG 719 | X | 1 |
| 46-032 | LG 705 | X | 1 |
| 46-033 | LG 714 | X | 1 |
| 46-034 | LG 714 | X | 1 |
| 46-035 | LG 714 | X | 1 |
| 46-036 | LG 714 | X | 1 |
| 46-038 | LG 715 | X | 1 |
| 46-039 | LG 705 | X | 1 |
| 46-041 | LG 706 | X | 1 |
| 46-042 | LG 715 | X | 1 |
| 46-043 | LG 715 | X | 1 |
| 46-044 | LG 710 | X | 1 |
| 46-046 | LG 704 | X | 1 |
| 46-047 | LG 704 | X | 1 |
| 46-048 | LG 711 | X | 1 |

| OREGON | Page | Code | Pk. |
|---|---|---|---|
| 46-049 | LG 705 | X | 1 |
| 46-050 | LG 711 | X | 1 |
| 46-051 | LG 712 | X | 1 |
| 46-200 | LG 722 | X | 1 |
| 46-300 | LG 717 | X | 1 |
| 46-302 | LG 709 | X | 1 |
| 46-304 | LG 723 | X | 1 |
| 46-306 | LG 708 | X | 1 |
| 46-310 | LG 713 | X | 1 |
| 46-315 | LG 717 | X | 1 |
| 46-316 | LG 707 | X | 1 |
| 46-317 | LG 707 | X | 1 |
| 46-319 | LG 712 | X | 1 |
| 46-320 | LG 707 | X | 1 |
| 46-321 | LG 707 | X | 1 |
| 46-322 | LG 701 | X | 1 |
| 46-323 | LG 712 | X | 1 |
| 46-325 | LG 701 | X | 1 |
| 46-327 | LG 717 | X | 1 |
| 46-328 | LG 717 | X | 1 |
| 46-330 | LG 701 | X | 1 |
| 46-332 | LG 720 | X | 1 |
| 46-333 | LG 709 | X | 1 |
| 46-334 | LG 719 | X | 1 |
| 46-335 | LG 719 | X | 1 |
| 46-336 | LG 709 | X | 1 |
| 46-337 | LG 713 | X | 1 |
| 46-338 | LG 704 | X | 1 |
| 46-339 | LG 710 | X | 1 |
| 46-340 | LG 711 | X | 1 |
| 46-341 | LG 711 | X | 1 |
| 46-342 | LG 713 | X | 1 |
| 46-416 | LG 718 | X | 1 |
| 47-014 | LG 743 | X | 10 |
| 47-020 | LG 743 | X | 1 |
| 47-038 | LG 743 | X | 10 |
| 47-050 | LG 744 | X | 1 |
| 47-051 | LG 744 | X | 1 |
| 47-080 | LG 744 | X | 1 |
| 47-081 | LG 744 | X | 1 |
| 47-120 | LG 744 | X | 1 |
| 47-121 | LG 744 | X | 1 |
| 47-160 | LG 744 | X | 1 |
| 47-161 | LG 744 | X | 1 |
| 47-200 | LG 744 | X | 1 |
| 47-201 | LG 744 | X | 1 |
| 47-689 | LG 743 | X | 1 |
| 48-001 | LG 914 | X | 1 |
| 48-006 | LG 694 | X | 1 |
| 48-007 | LG 1039 | X | 1 |
| 48-009 | LG 697 | X | 1 |
| 48-011 | SFS 105 | X | 1 |
| 48-043 | | X | 1 |
| 48-048 | LG 725 | X | 1 |
| 48-049 | LG 725 | X | 1 |
| 48-051 | LG 725 | X | 1 |
| 48-080 | | X | 1 |
| 48-135 | LG 694 | X | 1 |
| 48-141 | LG 249 | X | 1 |
| 48-145 | LG 698 | X | 1 |
| 48-148 | LG 695 | X | 1 |
| 48-200 | LG 694 | X | 1 |
| 48-202 | LG 694 | X | 1 |
| 48-205 | LG 694 | X | 1 |
| 48-206 | LG 246 | X | 10 |
| 48-211 | LG 233 | X | 1 |
| 48-232 | LG 724 | X | 1 |
| 48-233 | LG 724 | X | 1 |
| 48-235 | LG 886 | X | 1 |
| 48-236 | LG 724 | X | 1 |
| 48-237 | LG 695 | X | 1 |

| OREGON | Page | Code | Pk. |
|---|---|---|---|
| 48-320 | LG 238 | X | 1 |
| 49-001 | LG 622 | X | 10 |
| 49-002 | LG 623 | X | 1 |
| 49-003 | LG 622 | X | 10 |
| 49-004 | LG 622 | X | 10 |
| 49-005 | LG 622 | X | 1 |
| 49-006 | LG 622 | X | 1 |
| 49-007 | LG 622 | X | 1 |
| 49-008 | LG 623 | X | 1 |
| 49-009 | LG 625 | X | 1 |
| 49-010 | SFS 92 | X | 12 |
| 49-014 | LG 759 | X | 1 |
| 49-015 | SFS 92 | X | 12 |
| 49-016 | LG 759 | X | 10 |
| 49-017 | LG 760 | X | 10 |
| 49-018 | LG 728 | X | 1 |
| 49-019 | LG 609 | X | 1 |
| 49-020 | LG 631 | X | 1 |
| 49-021 | LG 629 | X | 10 |
| 49-023 | LG 629 | X | 1 |
| 49-025 | LG 629 | X | 1 |
| 49-026 | LG 769 | X | 1 |
| 49-027 | LG 769 | X | 1 |
| 49-028 | LG 769 | X | 10 |
| 49-029 | LG 609 | X | 1 |
| 49-031 | LG 746 | X | 10 |
| 49-033 | LG 628 | X | 1 |
| 49-034 | LG 630 | X | 1 |
| 49-035 | LG 629 | X | 1 |
| 49-036 | LG 628 | X | 1 |
| 49-037 | LG 622 | X | 1 |
| 49-038 | LG 628 | X | 1 |
| 49-039 | LG 629 | X | 1 |
| 49-040-0 | LG 749 | X | 10 |
| 49-041-0 | LG 749 | X | 10 |
| 49-045 | LG 749 | X | 10 |
| 49-047 | LG 749 | X | 10 |
| 49-050 | LG 954 | X | 1 |
| 49-051 | LG 954 | X | 1 |
| 49-054 | LG 632 | X | 1 |
| 49-058 | LG 768 | X | 1 |
| 49-067 | LG 748 | X | 10 |
| 49-069 | LG 746 | X | 10 |
| 49-070 | LG 604 | X | 1 |
| 49-071 | LG 602 | X | 1 |
| 49-077 | LG 628 | X | 1 |
| 49-078 | LG 603 | X | 1 |
| 49-079 | LG 768 | X | 1 |
| 49-083 | LG 913 | X | 1 |
| 49-084 | LG 759 | X | 10 |
| 49-085 | LG 769 | X | 10 |
| 49-088-0 | LG 631 | X | 1 |
| 49-095 | LG 746 | X | 10 |
| 49-099 | LG 748 | X | 10 |
| 49-100 | LG 749 | X | 10 |
| 49-101 | LG 602 | X | 1 |
| 49-102 | LG 602 | X | 1 |
| 49-107 | LG 749 | X | 10 |
| 49-109 | LG 748 | X | 10 |
| 49-110 | LG 746 | X | 10 |
| 49-111 | LG 748 | X | 10 |
| 49-112 | LG 749 | X | 10 |
| 49-114 | LG 746 | X | 10 |
| 49-115 | LG 746 | X | 10 |
| 49-119 | LG 746 | X | 10 |
| 49-120 | LG 759 | X | 10 |
| 49-123 | LG 746 | X | 10 |
| 49-127 | LG 746 | X | 10 |
| 49-128 | LG 747 | X | 1 |
| 49-129 | LG 745 | X | 10 |
| 49-131 | LG 745 | X | 10 |



N = New Item
F = NLA after inventories are sold

D = Discontinued after 2019 catalog
X = Active part number

# 2019 Numerical Index

| OREGON | Page | Code | Pk. |
|---|---|---|---|
| 49-132 | LG 749 | X | 10 |
| 49-133 | LG 609 | X | 1 |
| 49-143 | LG 752 | X | 10 |
| 49-145 | LG 603 | X | 1 |
| 49-146 | LG 603 | X | 1 |
| 49-147 | LG 603 | X | 1 |
| 49-148 | LG 603 | X | 1 |
| 49-149 | LG 604 | X | 1 |
| 49-150 | LG 758 | X | 10 |
| 49-152 | LG 758 | X | 10 |
| 49-153 | LG 758 | X | 10 |
| 49-156 | LG 759 | X | 10 |
| 49-157 | LG 759 | X | 10 |
| 49-160 | LG 747 | X | 10 |
| 49-161 | LG 747 | X | 1 |
| 49-170 | LG 758 | X | 10 |
| 49-181 | LG 752 | X | 1 |
| 49-182 | LG 752 | X | 1 |
| 49-183 | LG 752 | X | 1 |
| 49-184 | LG 752 | X | 1 |
| 49-185 | LG 752 | X | 1 |
| 49-186 | LG 751 | X | 1 |
| 49-187 | LG 752 | X | 1 |
| 49-189 | LG 752 | X | 1 |
| 49-190 | LG 752 | X | 1 |
| 49-191 | LG 752 | X | 1 |
| 49-192 | LG 752 | X | 1 |
| 49-193 | LG 756 | X | 1 |
| 49-194 | LG 755 | X | 1 |
| 49-196 | LG 756 | X | 1 |
| 49-201 | LG 608 | X | 1 |
| 49-204 | LG 749 | X | 1 |
| 49-206 | LG 755 | X | 10 |
| 49-207 | LG 756 | X | 1 |
| 49-208 | LG 756 | X | 1 |
| 49-209 | LG 625 | X | 1 |
| 49-210 | LG 628 | X | 1 |
| 49-213 | LG 623 | X | 10 |
| 49-214 | LG 624 | X | 1 |
| 49-216 | LG 602 | X | 1 |
| 49-218 | LG 628 | X | 1 |
| 49-219 | LG 625 | X | 1 |
| 49-220 | LG 603 | X | 1 |
| 49-221 | LG 604 | X | 1 |
| 49-222 | LG 604 | X | 1 |
| 49-223 | LG 604 | X | 1 |
| 49-224 | LG 623 | X | 1 |
| 49-225 | LG 604 | X | 1 |
| 49-226 | LG 596 | X | 1 |
| 49-227 | LG 596 | X | 1 |
| 49-228 | LG 596 | X | 1 |
| 49-229 | LG 609 | X | 1 |
| 49-230 | LG 609 | X | 1 |
| 49-231 | LG 630 | X | 1 |
| 49-233 | LG 601 | X | 1 |
| 49-234 | LG 601 | X | 1 |
| 49-235 | LG 625 | X | 1 |
| 49-236 | LG 601 | X | 1 |
| 49-237 | LG 626 | X | 1 |
| 49-238 | LG 626 | X | 1 |
| 49-239 | LG 609 | X | 1 |
| 49-240 | LG 626 | X | 1 |
| 49-241 | LG 626 | X | 1 |
| 49-242 | LG 624 | X | 1 |
| 49-243 | LG 624 | X | 1 |
| 49-244 | LG 629 | X | 1 |
| 49-246 | LG 627 | X | 1 |
| 49-262 | LG 621 | X | 10 |
| 49-270 | LG 619 | X | 1 |
| 49-271 | LG 614 | X | 1 |
| 49-272 | LG 614 | X | 1 |
| 49-273 | LG 620 | X | 1 |
| 49-274 | LG 614 | X | 1 |
| 49-275 | LG 620 | X | 1 |
| 49-276 | LG 620 | X | 1 |
| 49-277 | LG 620 | X | 1 |
| 49-281 | LG 613 | X | 1 |
| 49-282 | LG 619 | X | 1 |
| 49-283 | LG 616 | X | 1 |
| 49-284 | LG 617 | X | 1 |
| 49-285 | LG 617 | X | 1 |
| 49-286 | LG 615 | X | 1 |
| 49-287 | LG 620 | X | 1 |
| 49-288 | LG 619 | X | 1 |
| 49-300 | LG 626 | X | 1 |
| 49-301 | LG 606 | X | 1 |
| 49-304 | LG 603 | X | 1 |
| 49-305 | LG 603 | X | 1 |
| 49-307 | LG 625 | X | 1 |
| 49-308 | LG 625 | X | 1 |
| 49-312 | LG 605 | X | 1 |
| 49-313 | LG 620 | X | 1 |
| 49-314 | LG 910 | X | 1 |
| 49-315 | LG 627 | X | 10 |
| 49-316 | LG 613 | X | 1 |
| 49-317 | LG 613 | X | 1 |
| 49-318 | LG 621 | X | 1 |
| 49-319 | LG 620 | X | 1 |
| 49-320 | LG 621 | X | 1 |
| 49-322 | LG 620 | X | 1 |
| 49-323 | LG 621 | X | 1 |
| 49-324 | LG 752 | X | 1 |
| 49-325 | LG 605 | X | 1 |
| 49-326 | LG 768 | X | 1 |
| 49-327 | LG 606 | X | 1 |
| 49-328 | LG 606 | X | 1 |
| 49-329 | LG 604 | X | 1 |
| 49-331 | LG 604 | X | 1 |
| 49-333 | LG 910 | X | 1 |
| 49-355 | LG 746 | X | 10 |
| 49-359 | LG 628 | X | 1 |
| 49-360 | LG 628 | X | 1 |
| 49-361 | LG 628 | X | 1 |
| 49-362 | LG 624 | X | 1 |
| 49-363 | LG 624 | X | 1 |
| 49-401 | LG 605 | X | 1 |
| 49-402 | LG 758 | X | 10 |
| 49-403 | LG 758 | X | 10 |
| 49-411 | LG 759 | X | 1 |
| 49-412 | LG 745 | X | 1 |
| 49-413 | LG 749 | X | 1 |
| 49-420 | LG 606 | X | 1 |
| 49-421 | LG 607 | X | 1 |
| 49-422 | LG 607 | X | 1 |
| 49-426 | LG 607 | X | 1 |
| 49-427 | LG 607 | X | 1 |
| 49-428 | LG 607 | X | 1 |
| 49-429 | LG 607 | X | 1 |
| 49-430 | LG 607 | X | 1 |
| 49-432 | LG 607 | X | 1 |
| 49-433 | LG 608 | X | 1 |
| 49-435 | LG 608 | X | 1 |
| 49-436 | LG 608 | X | 1 |
| 49-437 | LG 614 | X | 1 |
| 49-438 | LG 615 | X | 1 |
| 49-439 | LG 614 | X | 1 |
| 49-440 | LG 618 | X | 1 |
| 49-441 | LG 618 | X | 1 |
| 49-442 | LG 619 | X | 1 |
| 49-443 | LG 630 | X | 1 |
| 49-444 | LG 630 | X | 1 |
| 49-603 | LG 757 | N | 1 |
| 49-604 | LG 757 | N | 1 |
| 49-605 | LG 757 | N | 1 |
| 49-606 | LG 622 | N | 1 |
| 49-607 | LG 757 | N | 1 |
| 49-608 | LG 627 | N | 1 |
| 49-609 | LG 630 | N | 1 |
| 49-610 | LG 632 | N | 1 |
| 49-611 | LG 630 | N | 1 |
| 49-612 | LG 631 | N | 1 |
| 49-667 | LG 750 | X | 10 |
| 49-693 | LG 602 | X | 1 |
| 49-700 | LG 605 | X | 1 |
| 49-800 | LG 610 | X | 1 |
| 49-801 | LG 610 | X | 1 |
| 49-802 | LG 610 | X | 1 |
| 49-803 | LG 610 | X | 1 |
| 49-804 | LG 610 | X | 1 |
| 49-805 | LG 609 | X | 1 |
| 49-806 | LG 611 | X | 1 |
| 49-807 | LG 611 | X | 1 |
| 49-809 | LG 613 | X | 1 |
| 49-810 | LG 612 | X | 1 |
| 49-812 | LG 612 | X | 1 |
| 49-813-1 | LG 610 | X | 1 |
| 49-814 | LG 614 | X | 1 |
| 49-815 | LG 626 | X | 1 |
| 49-816 | LG 612 | X | 1 |
| 49-817-0 | LG 616 | X | 1 |
| 49-818-0 | LG 615 | X | 1 |
| 49-819-0 | LG 615 | X | 1 |
| 49-822-0 | LG 616 | X | 1 |
| 49-823-0 | LG 618 | X | 1 |
| 49-825 | LG 606 | X | 1 |
| 49-826 | LG 606 | X | 1 |
| 49-827 | LG 608 | X | 1 |
| 49-828 | LG 608 | X | 1 |
| 49-829 | LG 605 | X | 1 |
| 49-831 | LG 612 | X | 1 |
| 49-832 | LG 611 | X | 1 |
| 49-833 | LG 611 | X | 1 |
| 49-834 | LG 611 | X | 1 |
| 49-835 | LG 611 | X | 1 |
| 49-836-0 | LG 616 | X | 1 |
| 49-837-0 | LG 615 | X | 1 |
| 49-839 | LG 613 | X | 1 |
| 49-840 | LG 609 | X | 1 |
| 49-841 | LG 626 | X | 10 |
| 49-843 | LG 612 | X | 1 |
| 49-844 | LG 612 | X | 1 |
| 49-845 | LG 611 | X | 1 |
| 49-846 | LG 608 | X | 1 |
| 49-847 | LG 610 | X | 1 |
| 49-848 | LG 613 | X | 1 |
| 49-849 | LG 610 | X | 1 |
| 49-852 | LG 611 | X | 1 |
| 49-853 | LG 611 | X | 1 |
| 49-854 | LG 615 | X | 1 |
| 49-855 | LG 617 | X | 1 |
| 49-856 | LG 619 | X | 1 |
| 49-857 | LG 619 | X | 1 |
| 49-859 | LG 616 | X | 1 |
| 49-860 | LG 616 | X | 1 |
| 49-861 | LG 615 | X | 1 |
| 49-863 | LG 616 | X | 1 |
| 49-864 | LG 616 | X | 1 |
| 49-865 | LG 616 | X | 1 |
| 49-866 | LG 617 | X | 1 |
| 49-867 | LG 618 | X | 1 |
| 49-868 | LG 602 | X | 1 |
| 49-872 | LG 612 | X | 1 |
| 49-873 | LG 612 | X | 1 |

N = New Item
F = NLA after inventories are sold

D = Discontinued after 2019 catalog
X = Active part number

# 2019 Numerical Index

| OREGON | Page | Code | Pk. |
|---|---|---|---|
| 49-875 | LG 612 | X | 1 |
| 49-877 | LG 613 | X | 1 |
| 49-879 | LG 618 | X | 1 |
| 49-880 | LG 617 | X | 1 |
| 49-881 | LG 618 | X | 1 |
| 49-882-0 | LG 613 | X | 1 |
| 49-883 | LG 618 | X | 1 |
| 49-884 | LG 619 | X | 1 |
| 49-885-0 | LG 619 | X | 1 |
| 49-887-0 | LG 616 | X | 1 |
| 49-888-0 | LG 617 | X | 1 |
| 49-891-0 | LG 617 | X | 1 |
| 49-893 | LG 617 | X | 1 |
| 49-894 | LG 619 | X | 1 |
| 49-897 | LG 617 | X | 1 |
| 49-898 | LG 618 | X | 1 |
| 49-899 | LG 617 | X | 1 |
| 49-901 | LG 615 | X | 1 |
| 49-902 | LG 614 | X | 1 |
| 49-903 | LG 615 | X | 1 |
| 49-904 | LG 614 | X | 1 |
| 49-906 | LG 615 | X | 1 |
| 49-908 | LG 614 | X | 1 |
| 49-911 | LG 624 | X | 1 |
| 49-912 | LG 624 | X | 1 |
| 49-913 | LG 624 | X | 1 |
| 49-914 | LG 165 | X | 1 |
| 49-915 | LG 597 | X | 1 |
| 49-916 | LG 629 | X | 1 |
| 49-917 | LG 623 | N | 10 |
| 49-918 | LG 623 | N | 10 |
| 49-919 | LG 623 | N | 10 |
| 49-920 | LG 623 | N | 10 |
| 49-921 | LG 618 | N | 1 |
| 49-922 | LG 623 | N | 10 |
| 49-923 | LG 620 | N | 1 |
| 49-924 | LG 619 | N | 1 |
| 49-978 | LG 609 | X | 1 |
| 49-985 | LG 625 | X | 1 |
| 49-986 | LG 627 | X | 1 |
| 49-989 | LG 602 | X | 1 |
| 49-991 | LG 602 | X | 1 |
| 49-992 | LG 624 | X | 1 |
| 49-993 | LG 624 | X | 1 |
| 49-994 | LG 625 | X | 1 |
| 49-995 | LG 625 | X | 1 |
| 49-996 | LG 629 | X | 1 |
| 49-997 | LG 628 | X | 1 |
| 49-998 | LG 626 | X | 1 |
| 49-999 | LG 626 | X | 1 |
| 491-530 | LG 416 | X | 10 |
| 492-726 | LG 436 | X | 6 |
| 492-730 | LG 440 | X | 6 |
| 492-731 | LG 436 | X | 6 |
| 492-732 | LG 442 | X | 6 |
| 496-399 | LG 416 | X | 6 |
| 49981 | | X | 6 |
| 50-025-0 | LG 747 | X | 1 |
| 50-027 | LG 747 | X | 1 |
| 50-032 | LG 759 | X | 1 |
| 50-033 | LG 759 | X | 1 |
| 50-034 | LG 598 | N | 1 |
| 50-041 | LG 757 | X | 1 |
| 50-043 | LG 757 | X | 1 |
| 50-101 | LG 746 | X | 10 |
| 50-204 | LG 758 | X | 10 |
| 50-206 | LG 758 | X | 10 |
| 50-302 | LG 758 | X | 1 |
| 50-407 | LG 758 | X | 1 |
| 50-408 | LG 745 | X | 1 |
| 50-409 | LG 745 | X | 1 |

| OREGON | Page | Code | Pk. |
|---|---|---|---|
| 50-410 | LG 745 | X | 1 |
| 50-411 | LG 745 | X | 1 |
| 50-412 | LG 745 | X | 1 |
| 50-414 | LG 751 | X | 1 |
| 50-415 | LG 751 | X | 1 |
| 50-416 | LG 751 | X | 1 |
| 50-417 | LG 751 | X | 1 |
| 50-418 | LG 751 | X | 1 |
| 50-419 | LG 751 | X | 1 |
| 50-420 | LG 751 | X | 10 |
| 50-421 | LG 751 | X | 10 |
| 50-422 | LG 751 | X | 10 |
| 50-423 | LG 753 | X | 1 |
| 50-425 | LG 753 | X | 1 |
| 50-426 | LG 753 | X | 1 |
| 50-428 | LG 752 | X | 1 |
| 50-431 | LG 753 | X | 1 |
| 50-432 | LG 753 | X | 1 |
| 50-433 | LG 753 | X | 1 |
| 50-435 | LG 747 | X | 1 |
| 50-437 | LG 745 | X | 1 |
| 50-438 | LG 747 | X | 1 |
| 50-441 | LG 748 | X | 1 |
| 50-445 | LG 748 | X | 1 |
| 50-446 | | X | 1 |
| 50-448 | LG 748 | X | 1 |
| 50-450 | LG 753 | X | 1 |
| 50-452 | LG 753 | X | 1 |
| 50-453 | LG 756 | X | 1 |
| 50-454 | LG 756 | X | 1 |
| 50-455 | LG 753 | X | 1 |
| 50-502 | LG 756 | X | 10 |
| 50-541 | LG 747 | X | 1 |
| 50-542 | LG 747 | X | 1 |
| 50-543 | LG 748 | X | 1 |
| 50-544 | LG 747 | X | 1 |
| 50-545 | LG 748 | X | 1 |
| 50-546 | LG 748 | X | 1 |
| 50-548 | LG 759 | X | 1 |
| 50-553 | LG 752 | X | 1 |
| 50-554 | LG 753 | X | 1 |
| 50-555 | LG 753 | X | 1 |
| 50-556 | LG 753 | X | 1 |
| 50-603 | LG 595 | X | 1 |
| 50-607 | LG 595 | X | 1 |
| 50-619 | LG 595 | X | 1 |
| 50-620 | LG 595 | X | 1 |
| 50-621 | LG 595 | X | 1 |
| 50-634 | LG 597 | X | 1 |
| 50-635 | LG 596 | X | 1 |
| 50-636 | LG 596 | X | 1 |
| 50-637 | LG 597 | X | 1 |
| 50-638 | LG 596 | X | 1 |
| 50-640 | LG 598 | X | 1 |
| 50-641 | LG 598 | X | 1 |
| 50-642 | LG 598 | X | 1 |
| 50-646 | LG 598 | X | 1 |
| 50-647 | LG 598 | X | 1 |
| 50-649 | LG 598 | X | 1 |
| 50-650 | LG 599 | X | 1 |
| 50-651 | LG 599 | X | 1 |
| 50-652 | LG 599 | X | 1 |
| 50-653 | LG 599 | X | 1 |
| 50-654 | LG 599 | X | 1 |
| 50-655 | LG 600 | X | 1 |
| 50-656 | LG 600 | X | 1 |
| 50-657 | LG 596 | X | 1 |
| 50-658 | LG 596 | X | 1 |
| 50-659 | LG 600 | X | 1 |
| 50-661 | LG 600 | X | 1 |
| 50-662 | LG 600 | X | 1 |

| OREGON | Page | Code | Pk. |
|---|---|---|---|
| 50-663 | LG 600 | X | 1 |
| 50-664 | LG 600 | X | 1 |
| 50-665 | LG 601 | X | 1 |
| 50-666 | LG 601 | X | 1 |
| 50-667 | LG 600 | X | 1 |
| 50-668 | LG 597 | X | 1 |
| 50-669 | LG 597 | X | 1 |
| 50-670 | LG 597 | X | 1 |
| 50-673 | LG 597 | X | 1 |
| 50-674 | LG 597 | X | 1 |
| 51-000 | LG 727 | X | 1 |
| 51-001-0 | LG 727 | X | 1 |
| 51-011 | LG 727 | X | 1 |
| 51-013 | LG 725 | X | 1 |
| 51-014 | LG 941 | X | 1 |
| 51-222 | LG 727 | X | 1 |
| 51-223 | LG 726 | X | 1 |
| 51-224 | LG 726 | X | 1 |
| 51-225 | LG 725 | X | 1 |
| 514316 | | D | 1 |
| 514363 | SFS 63 | X | 6 |
| 514364 | SFS 63 | X | 6 |
| 514366 | LG 700 | X | 1 |
| 514371 | LG 721 | X | 1 |
| 515952 | | X | 1 |
| 518769 | LG 911 | X | 1 |
| 518771 | LG 911 | X | 1 |
| 53-001 | LG 623 | X | 10 |
| 53-005 | LG 632 | X | 10 |
| 53-006 | LG 632 | X | 10 |
| 54-001 | SFS 82 | X | 48 |
| 54-002 | SFS 82 | X | 48 |
| 54-005 | SFS 82 | X | 12 |
| 54-006 | SFS 82 | X | 1 |
| 54-007 | SFS 82 | X | 1 |
| 54-021 | SFS 92 | X | 1 |
| 54-026 | SFS 84 | X | 12 |
| 54-059 | SFS 84 | X | 4 |
| 54-063 | SFS 84 | X | 1 |
| 55-001 | SFS 63 | X | 1 |
| 55-002-1 | LG 993 | X | 10 |
| 55-008 | LG 771 | X | 1 |
| 55-017 | LG 772 | X | 1 |
| 55-018 | LG 771 | X | 1 |
| 55-053 | | D | 1 |
| 55-069-0 | LG 993 | X | 10 |
| 55-079 | LG 214 | X | 1 |
| 55-092 | LG 768 | X | 1 |
| 55-097 | LG 772 | X | 1 |
| 55-102 | LG 773 | X | 1 |
| 55-106 | LG 773 | X | 1 |
| 55-109 | LG 773 | X | 1 |
| 55-110 | LG 765 | X | 1 |
| 55-111 | LG 1026 | X | 1 |
| 55-112 | LG 778 | X | 1 |
| 55-115 | LG 932 | X | 1 |
| 55-116 | LG 1018 | X | 1 |
| 55-118 | LG 630 | X | 1 |
| 55-119 | LG 764 | X | 1 |
| 55-120 | LG 770 | X | 1 |
| 55-121 | LG 1024 | X | 1 |
| 55-122 | LG 770 | X | 1 |
| 55-123 | LG 770 | X | 1 |
| 55-124 | LG 771 | X | 1 |
| 55-125 | LG 771 | X | 1 |
| 55-126 | LG 771 | X | 1 |
| 55-127 | LG 772 | X | 1 |
| 55-132 | LG 773 | X | 1 |
| 55-136-1 | LG 990 | X | 1 |
| 55-137-1 | LG 990 | X | 1 |
| 55-138 | LG 768 | X | 1 |



N = New Item
F = NLA after inventories are sold

D = Discontinued after 2019 catalog
X = Active part number

# 2019 Numerical Index

| OREGON | Page | Code | Pk. |
|---|---|---|---|
| 55-139 | LG 763 | X | 1 |
| 55-140-0 | LG 989 | X | 1 |
| 55-142-1 | LG 990 | X | 1 |
| 55-145-1 | LG 989 | X | 1 |
| 55-147-1 | | X | 1 |
| 55-150-1 | LG 989 | X | 10 |
| 55-156-1 | LG 993 | X | 1 |
| 55-157 | LG 763 | X | 1 |
| 55-158 | LG 934 | X | 1 |
| 55-159 | LG 989 | X | 1 |
| 55-164 | LG 1020 | X | 1 |
| 55-166 | | D | 1 |
| 55-168 | LG 933 | X | 1 |
| 55-179 | LG 1023 | X | 1 |
| 55-182 | LG 1023 | X | 1 |
| 55-184 | LG 1019 | X | 1 |
| 55-185 | LG 1027 | X | 1 |
| 55-186 | LG 1027 | X | 1 |
| 55-187 | LG 631 | X | 1 |
| 55-188 | LG 631 | X | 1 |
| 55-189 | LG 631 | X | 1 |
| 55-191 | LG 996 | X | 12 |
| 55-192 | | D | 1 |
| 55-193 | | D | 1 |
| 55-194 | LG 996 | X | 6 |
| 55-201 | LG 190 | X | 1 |
| 55-206 | LG 209 | X | 1 |
| 55-207 | LG 191 | X | 1 |
| 55-211 | LG 191 | X | 1 |
| 55-212 | LG 209 | X | 1 |
| 55-214 | LG 209 | X | 1 |
| 55-218 | LG 209 | X | 1 |
| 55-226 | LG 212 | X | 1 |
| 55-227 | LG 191 | X | 1 |
| 55-231 | LG 212 | X | 1 |
| 55-236 | LG 213 | X | 1 |
| 55-240 | LG 214 | X | 1 |
| 55-241 | LG 214 | X | 1 |
| 55-242 | LG 214 | X | 1 |
| 55-243 | LG 215 | X | 1 |
| 55-244 | LG 215 | X | 1 |
| 55-245 | LG 215 | X | 1 |
| 55-246 | LG 214 | X | 1 |
| 55-247 | LG 214 | X | 1 |
| 55-248 | LG 215 | X | 1 |
| 55-249 | LG 215 | X | 1 |
| 55-252 | LG 1019 | X | 1 |
| 55-253 | LG 1024 | X | 1 |
| 55-255 | LG 1019 | X | 1 |
| 55-256 | LG 1019 | X | 1 |
| 55-262 | LG 215 | X | 1 |
| 55-263 | LG 214 | X | 1 |
| 55-265 | LG 986 | X | 6 |
| 55-281 | LG 1027 | X | 1 |
| 55-284 | LG 992 | X | 1 |
| 55-285 | LG 1027 | X | 1 |
| 55-286 | LG 992 | X | 1 |
| 55-287 | LG 986 | X | 10 |
| 55-288 | LG 986 | X | 10 |
| 55-289 | LG 986 | X | 10 |
| 55-294 | LG 986 | X | 6 |
| 55-295 | LG 986 | X | 1 |
| 55-296 | LG 986 | X | 1 |
| 55-297 | LG 986 | X | 1 |
| 55-298 | LG 986 | X | 1 |
| 55-299 | LG 986 | X | 1 |
| 55-302-1 | LG 992 | X | 1 |
| 55-304-1 | LG 992 | X | 1 |
| 55-305-1 | LG 992 | X | 1 |
| 55-326 | LG 1021 | X | 1 |
| 55-328 | LG 992 | X | 1 |

| OREGON | Page | Code | Pk. |
|---|---|---|---|
| 55-332 | LG 633 | X | 10 |
| 55-333 | LG 633 | X | 10 |
| 55-334 | LG 633 | X | 10 |
| 55-336 | LG 986 | X | 10 |
| 55-337 | LG 986 | X | 10 |
| 55-338 | LG 986 | X | 10 |
| 55-339 | LG 986 | X | 10 |
| 55-340 | LG 627 | X | 10 |
| 55-342 | LG 627 | X | 10 |
| 55-343 | LG 627 | X | 10 |
| 55-344 | LG 986 | X | 10 |
| 55-345 | LG 986 | X | 10 |
| 55-347 | LG 986 | X | 1 |
| 55-348 | LG 986 | X | 1 |
| 55-349 | LG 986 | X | 1 |
| 55-352 | LG 986 | X | 1 |
| 55-355-1 | LG 994 | X | 1 |
| 55-356-0 | LG 994 | X | 1 |
| 55-357-1 | LG 994 | X | 1 |
| 55-403 | LG 995 | X | 22 |
| 55-406-0 | LG 995 | X | 1 |
| 55-417 | LG 995 | X | 10 |
| 55-460-1 | LG 1026 | X | 10 |
| 55-485 | LG 995 | X | 1 |
| 55-488 | LG 995 | X | 1 |
| 55-491 | LG 996 | X | 6 |
| 55-492 | LG 996 | X | 4 |
| 55-493 | | X | 4 |
| 55-510 | LG 212 | X | 1 |
| 55-515 | LG 211 | X | 1 |
| 55-516 | LG 985 | X | 10 |
| 55-517 | LG 985 | X | 10 |
| 55-518 | LG 985 | X | 1 |
| 55-519 | LG 985 | X | 1 |
| 55-520 | LG 985 | X | 1 |
| 55-521 | LG 985 | X | 10 |
| 55-522 | LG 985 | X | 1 |
| 55-523 | LG 985 | X | 1 |
| 55-524 | LG 985 | X | 1 |
| 55-545 | LG 992 | X | 10 |
| 55-546 | | D | 10 |
| 55-549 | LG 992 | X | 1 |
| 55-550 | LG 992 | X | 1 |
| 55-551 | LG 992 | X | 1 |
| 55-553 | LG 991 | X | 10 |
| 55-554 | | D | 1 |
| 55-555 | LG 991 | X | 1 |
| 55-556 | LG 991 | X | 10 |
| 55-557 | | D | 1 |
| 55-558 | LG 991 | X | 10 |
| 55-559 | LG 991 | X | 1 |
| 55-560 | LG 991 | X | 1 |
| 55-561 | | D | 1 |
| 55-562 | LG 991 | X | 10 |
| 55-563 | LG 991 | X | 1 |
| 55-564 | | D | 1 |
| 55-610 | LG 191 | X | 1 |
| 55-611 | LG 192 | X | 1 |
| 55-612 | LG 211 | X | 1 |
| 55-613 | LG 211 | X | 1 |
| 55-741 | LG 1019 | X | 1 |
| 55-743 | LG 988 | X | 1 |
| 55-800 | LG 934 | X | 1 |
| 55-803 | LG 1022 | X | 1 |
| 55-804-1 | LG 994 | X | 1 |
| 55-807 | LG 994 | X | 1 |
| 55-808-1 | LG 994 | X | 1 |
| 55-809-1 | LG 994 | X | 1 |
| 55-811 | LG 933 | X | 1 |
| 55-812 | LG 1022 | X | 1 |
| 55-813 | LG 933 | X | 1 |

| OREGON | Page | Code | Pk. |
|---|---|---|---|
| 55-816 | LG 988 | X | 1 |
| 55-820 | LG 935 | X | 1 |
| 55-821 | LG 988 | X | 1 |
| 55-822 | LG 1027 | X | 1 |
| 55-903 | | D | 1 |
| 55-970 | | D | 1 |
| 55-971 | LG 988 | X | 1 |
| 55-972 | LG 988 | X | 10 |
| 55-973 | LG 988 | X | 1 |
| 55-974 | LG 989 | X | 1 |
| 55-977 | | D | 1 |
| 55-978 | | D | 1 |
| 55-979 | | D | 1 |
| 55-983 | LG 992 | X | 6 |
| 55-984 | LG 991 | X | 6 |
| 55-985 | LG 991 | X | 6 |
| 55-986 | LG 991 | X | 6 |
| 55-987 | | D | 1 |
| 55-988 | | D | 1 |
| 55-989 | LG 985 | X | 1 |
| 55-990 | LG 985 | X | 1 |
| 55-993 | LG 988 | X | 1 |
| 55-994 | LG 988 | X | 1 |
| 55-995 | | D | 1 |
| 55-996 | LG 988 | X | 1 |
| 559046 | LG 978 | X | 16 |
| 559047 | LG 978 | X | 16 |
| 559050 | LG 978 | X | 8 |
| 559051 | LG 978 | X | 8 |
| 559213 | | X | 1 |
| 56-001 | LG 687 | X | 1 |
| 56-002 | LG 687 | X | 1 |
| 56-003 | LG 687 | X | 1 |
| 56-004 | LG 686 | X | 1 |
| 56-008 | LG 687 | X | 1 |
| 56-011 | LG 687 | X | 1 |
| 56-018 | LG 690 | X | 1 |
| 56-019 | LG 772 | X | 1 |
| 56-022 | LG 686 | X | 1 |
| 56-023 | LG 687 | X | 1 |
| 56-024 | LG 687 | X | 1 |
| 56-025 | LG 687 | X | 1 |
| 56-030 | LG 693 | X | 1 |
| 57-001 | LG 677 | X | 1 |
| 57-002 | LG 677 | X | 1 |
| 57-003 | LG 677 | X | 1 |
| 57-005 | LG 677 | X | 1 |
| 57-006 | LG 677 | X | 1 |
| 57-008 | LG 677 | X | 1 |
| 57-010 | LG 677 | X | 1 |
| 57-014 | LG 677 | X | 1 |
| 57-016 | LG 677 | X | 1 |
| 57-017 | LG 677 | X | 1 |
| 57-019 | LG 677 | X | 1 |
| 57-039 | | X | 1 |
| 57-050 | LG 1024 | X | 1 |
| 572015 | LG 912 | X | 1 |
| 572017 | LG 911 | X | 1 |
| 572018 | LG 911 | X | 1 |
| 572030 | LG 911 | X | 1 |
| 572031 | LG 911 | X | 1 |
| 572037 | LG 911 | X | 1 |
| 572049 | LG 911 | X | 1 |
| 575377 | SFS 58 | X | 1 |
| 575378 | SFS 58 | X | 1 |
| 58-001 | LG 961 | X | 1 |
| 58-011 | LG 957 | X | 1 |
| 58-012 | LG 957 | X | 1 |
| 58-013 | LG 957 | X | 1 |
| 58-020 | LG 957 | X | 1 |
| 58-021 | LG 957 | X | 1 |

N = New Item
F = NLA after inventories are sold

D = Discontinued after 2019 catalog
X = Active part number

# 2019 Numerical Index

| OREGON | Page | Code | Pk. |
|---|---|---|---|
| 58-022 | LG 957 | X | 1 |
| 58-023 | LG 957 | X | 1 |
| 58-024 | LG 957 | X | 1 |
| 58-040 | LG 961 | X | 1 |
| 58-041 | LG 961 | X | 1 |
| 58-043 | LG 961 | X | 1 |
| 58-050 | LG 958 | X | 1 |
| 58-061 | LG 959 | X | 1 |
| 58-063 | LG 959 | X | 1 |
| 58-064 | LG 959 | X | 1 |
| 58-065 | LG 959 | X | 1 |
| 58-066 | LG 959 | X | 1 |
| 58-067 | LG 959 | X | 1 |
| 58-068 | LG 959 | X | 1 |
| 58-069 | LG 959 | X | 1 |
| 58-071 | LG 959 | X | 1 |
| 58-072 | LG 959 | X | 1 |
| 58-074 | LG 959 | X | 1 |
| 58-075 | LG 959 | X | 1 |
| 58-076 | LG 959 | X | 1 |
| 58-077 | LG 959 | X | 1 |
| 58-078 | LG 959 | X | 1 |
| 58-079 | LG 959 | X | 1 |
| 58-087 | LG 959 | X | 1 |
| 58-088 | LG 959 | X | 1 |
| 58-110 | LG 960 | X | 1 |
| 58-112 | LG 960 | X | 1 |
| 58-114 | LG 960 | X | 1 |
| 58-117 | LG 960 | X | 1 |
| 58-119 | LG 960 | X | 1 |
| 58-131 | LG 960 | X | 1 |
| 58-132 | LG 960 | X | 1 |
| 58-133 | LG 960 | X | 1 |
| 58-135 | LG 960 | X | 1 |
| 58-150 | LG 960 | X | 1 |
| 58-160 | LG 963 | X | 1 |
| 58-242 | LG 958 | X | 1 |
| 58-300 | LG 963 | X | 1 |
| 58-302 | LG 959 | X | 1 |
| 58-329 | LG 960 | X | 1 |
| 58-332 | LG 959 | X | 1 |
| 58-356 | LG 958 | X | 1 |
| 58-358 | LG 958 | X | 1 |
| 58-360 | LG 958 | X | 1 |
| 58-361 | LG 958 | X | 1 |
| 58-362 | LG 958 | X | 1 |
| 58-375 | LG 958 | X | 1 |
| 58-397 | LG 958 | X | 1 |
| 58-398 | LG 959 | X | 1 |
| 58-399 | LG 960 | X | 1 |
| 584996 | | X | 1 |
| 59-200 | LG 783 | X | 1 |
| 59-201 | LG 783 | X | 1 |
| 59-202 | LG 783 | X | 1 |
| 59-203 | LG 783 | X | 1 |
| 590-669 | LG 420 | X | 6 |
| 590-685 | LG 540 | X | 6 |
| 590-698 | LG 510 | X | 6 |
| 591-259 | LG 438 | X | 6 |
| 591-585 | LG 493 | X | 6 |
| 591-594 | LG 482 | X | 6 |
| 591-611 | LG 527 | X | 6 |
| 591-635 | LG 411 | X | 6 |
| 591-938 | LG 407 | X | 6 |
| 592-015 | LG 515 | X | 6 |
| 592-033 | LG 443 | X | 6 |
| 592-124 | LG 497 | X | 6 |
| 592-137 | LG 396 | X | 6 |
| 592-160 | LG 419 | X | 6 |
| 592-608 | LG 434 | X | 6 |
| 592-615 | LG 491 | X | 6 |

| OREGON | Page | Code | Pk. |
|---|---|---|---|
| 592-616 | LG 485 | X | 6 |
| 592-617 | LG 487 | X | 6 |
| 593-600 | LG 385 | X | 6 |
| 593-601 | LG 386 | X | 6 |
| 594-078 | LG 564 | X | 6 |
| 594-085 | LG 564 | X | 6 |
| 594-601 | LG 434 | X | 6 |
| 595-024 | LG 465 | X | 6 |
| 595-077 | LG 461 | X | 6 |
| 595-085 | LG 462 | X | 6 |
| 595-087 | LG 417 | X | 6 |
| 595-088 | LG 458 | X | 6 |
| 595-601 | LG 400 | X | 6 |
| 595-602 | LG 403 | X | 6 |
| 595-605 | LG 422 | X | 6 |
| 595-609 | LG 461 | X | 6 |
| 595-613 | LG 463 | X | 6 |
| 595-614 | LG 459 | X | 6 |
| 595-621 | LG 467 | X | 6 |
| 595-622 | LG 468 | X | 6 |
| 595-623 | LG 466 | X | 6 |
| 595-807 | LG 382 | X | 6 |
| 595420 | | X | 1 |
| 596-300 | LG 519 | X | 6 |
| 596-303 | LG 416 | X | 6 |
| 596-306 | LG 487 | X | 6 |
| 596-308 | LG 548 | X | 6 |
| 596-309 | LG 489 | X | 6 |
| 596-310 | LG 447 | X | 6 |
| 596-319 | LG 415 | X | 6 |
| 596-321 | LG 562 | X | 6 |
| 596-322 | LG 438 | X | 6 |
| 596-323 | LG 453 | X | 6 |
| 596-327 | LG 434 | X | 6 |
| 596-329 | LG 578 | X | 6 |
| 596-330 | LG 406 | X | 6 |
| 596-332 | LG 484 | X | 6 |
| 596-333 | LG 408 | X | 6 |
| 596-341 | LG 482 | X | 6 |
| 596-344 | LG 495 | X | 6 |
| 596-346 | LG 393 | X | 6 |
| 596-347 | LG 448 | X | 6 |
| 596-351 | LG 408 | X | 6 |
| 596-354 | LG 484 | X | 6 |
| 596-362 | LG 441 | X | 6 |
| 596-370 | LG 427 | X | 6 |
| 596-373 | LG 512 | X | 6 |
| 596-387 | LG 407 | X | 6 |
| 596-601 | LG 474 | X | 6 |
| 596-615 | LG 529 | X | 6 |
| 596-627 | LG 502 | X | 6 |
| 596-628 | LG 528 | X | 6 |
| 596-629 | LG 393 | X | 6 |
| 596-702 | LG 388 | X | 6 |
| 596-704 | LG 471 | X | 6 |
| 596-717 | LG 501 | X | 6 |
| 596-719 | LG 488 | X | 6 |
| 596-722 | LG 492 | X | 6 |
| 596-730 | LG 490 | X | 6 |
| 596-734 | LG 489 | X | 6 |
| 596-743 | LG 493 | X | 6 |
| 596-749 | LG 433 | X | 6 |
| 596-752 | LG 415 | X | 6 |
| 596-769 | LG 488 | X | 6 |
| 596-771 | LG 492 | X | 6 |
| 596-775 | LG 493 | X | 6 |
| 596-787 | LG 500 | X | 6 |
| 596-808 | LG 472 | X | 6 |
| 596-810 | LG 499 | X | 6 |
| 596-812 | LG 498 | X | 6 |
| 596-815 | LG 578 | X | 6 |

| OREGON | Page | Code | Pk. |
|---|---|---|---|
| 596-816 | LG 451 | X | 6 |
| 596-817 | LG 371 | X | 6 |
| 596-818 | LG 453 | X | 6 |
| 596-900 | LG 380 | X | 6 |
| 597-601 | LG 527 | X | 6 |
| 597-602 | LG 524 | X | 6 |
| 597-606 | LG 522 | X | 6 |
| 598-064 | LG 514 | X | 6 |
| 598-600 | LG 519 | X | 6 |
| 598-628 | LG 517 | X | 6 |
| 598-629 | LG 575 | X | 6 |
| 598-631 | LG 390 | X | 6 |
| 598-640 | LG 405 | X | 6 |
| 598-672 | LG 515 | X | 6 |
| 599-132 | LG 522 | X | 6 |
| 599-133 | LG 422 | X | 6 |
| 60-000 | LG 702 | X | 1 |
| 60-001 | LG 708 | X | 1 |
| 60-002 | LG 710 | X | 1 |
| 60-003 | LG 710 | X | 1 |
| 60-004 | LG 701 | X | 1 |
| 60-005 | LG 704 | X | 1 |
| 60-006 | LG 716 | X | 1 |
| 60-007 | LG 704 | X | 1 |
| 60-008 | LG 703 | X | 1 |
| 60-009 | LG 709 | X | 1 |
| 60-012-0 | LG 712 | X | 1 |
| 60-014 | LG 712 | X | 1 |
| 60-015 | LG 716 | X | 1 |
| 60-016 | LG 710 | X | 1 |
| 60-021 | LG 706 | X | 1 |
| 60-025-0 | LG 716 | X | 1 |
| 60-026-0 | LG 716 | X | 1 |
| 60-027 | LG 718 | X | 1 |
| 60-028 | LG 718 | X | 1 |
| 60-030-0 | LG 716 | X | 1 |
| 60-031-0 | LG 716 | X | 1 |
| 60-032-0 | LG 716 | X | 1 |
| 60-033-0 | LG 716 | X | 1 |
| 60-036 | LG 701 | X | 1 |
| 60-039 | LG 706 | X | 1 |
| 60-041 | LG 711 | X | 1 |
| 60-042 | LG 712 | X | 1 |
| 60-043 | LG 716 | X | 1 |
| 60-045 | LG 707 | X | 1 |
| 60-046 | LG 700 | X | 1 |
| 60-048 | LG 722 | X | 1 |
| 60-053 | LG 708 | X | 1 |
| 60-054 | LG 708 | X | 1 |
| 60-056 | LG 706 | X | 1 |
| 60-057 | LG 706 | X | 1 |
| 60-059 | LG 706 | X | 1 |
| 60-060 | LG 722 | X | 1 |
| 60-061 | LG 718 | X | 1 |
| 60-062 | LG 706 | X | 1 |
| 60-065 | LG 722 | X | 1 |
| 60-079 | LG 709 | X | 1 |
| 60-092 | LG 722 | X | 1 |
| 60-100 | LG 721 | X | 1 |
| 60-101 | LG 702 | X | 1 |
| 60-102 | LG 702 | X | 1 |
| 60-103 | LG 702 | X | 1 |
| 60-104 | LG 702 | X | 1 |
| 60-105 | LG 702 | X | 1 |
| 60-106 | LG 701 | X | 1 |
| 60-107 | LG 703 | X | 1 |
| 60-108 | LG 703 | X | 1 |
| 60-109 | LG 703 | X | 1 |
| 60-110 | LG 703 | X | 1 |
| 60-122 | LG 721 | X | 1 |
| 60-123 | LG 717 | X | 1 |



N = New Item
F = NLA after inventories are sold

D = Discontinued after 2019 catalog
X = Active part number

| OREGON | Page | Code | Pk. |
|---|---|---|---|
| 60-124 | LG 710 | X | 1 |
| 60-125 | LG 718 | X | 1 |
| 60-137 | LG 705 | X | 1 |
| 60-140 | LG 715 | X | 1 |
| 60-160 | LG 701 | X | 1 |
| 60-184 | LG 720 | X | 1 |
| 60-188 | LG 718 | X | 1 |
| 60-201 | LG 718 | X | 1 |
| 60-209 | LG 700 | X | 1 |
| 60-210 | LG 700 | X | 1 |
| 60-220 | LG 708 | X | 1 |
| 60-226 | LG 700 | X | 1 |
| 60-240 | LG 719 | X | 1 |
| 60-353 | LG 719 | X | 1 |
| 60-365 | LG 700 | X | 1 |
| 60-380 | LG 717 | X | 1 |
| 60-400 | LG 700 | X | 1 |
| 60-408 | LG 700 | X | 1 |
| 60-409 | LG 700 | X | 1 |
| 60-410 | LG 703 | X | 1 |
| 60-420 | LG 717 | X | 1 |
| 60-426 | LG 699 | X | 1 |
| 60-427 | LG 717 | X | 1 |
| 60-428 | LG 720 | X | 1 |
| 60-522 | LG 715 | X | 1 |
| 60-525 | LG 702 | X | 1 |
| 60-526 | LG 702 | X | 1 |
| 60-527 | LG 714 | X | 1 |
| 60-528 | LG 708 | X | 1 |
| 60-529 | LG 720 | X | 1 |
| 60-530 | LG 720 | X | 1 |
| 60-531 | LG 720 | X | 1 |
| 60-687 | LG 720 | X | 1 |
| 60-786 | LG 719 | X | 1 |
| 60-860 | LG 701 | X | 1 |
| 60-991 | LG 718 | X | 1 |
| 605531 | LG 912 | N | 1 |
| 605532 | LG 912 | N | 1 |
| 605533 | LG 911 | N | 1 |
| 605534 | LG 912 | N | 1 |
| 605535 | LG 912 | N | 1 |
| 65-002 | LG 340 | X | 1 |
| 65-006 | LG 340 | X | 1 |
| 65-007 | LG 342 | X | 1 |
| 65-008 | LG 340 | X | 1 |
| 65-009 | LG 341 | X | 1 |
| 65-204 | LG 342 | X | 1 |
| 65-206 | LG 342 | X | 1 |
| 65-208 | LG 342 | X | 1 |
| 65-220 | LG 340 | X | 1 |
| 65-221 | LG 341 | X | 1 |
| 65-222 | LG 341 | X | 1 |
| 65-224 | LG 341 | X | 1 |
| 65-225 | LG 341 | X | 1 |
| 65-226 | LG 341 | X | 1 |
| 65-228 | LG 341 | X | 1 |
| 65-229 | LG 342 | X | 1 |
| 65-230 | LG 342 | X | 1 |
| 66-200 | LG 962 | X | 1 |
| 66-202 | LG 962 | X | 1 |
| 66-203 | LG 962 | X | 1 |
| 66-205 | LG 962 | X | 1 |
| 66-206 | LG 962 | X | 1 |
| 66-207 | LG 962 | X | 1 |
| 66-208 | LG 962 | X | 1 |
| 66-209 | LG 962 | X | 1 |
| 67-001 | LG 965 | X | 1 |
| 67-002 | LG 965 | X | 1 |
| 67-003 | LG 965 | X | 1 |
| 67-004 | LG 965 | X | 1 |
| 67-005 | LG 965 | X | 1 |

| OREGON | Page | Code | Pk. |
|---|---|---|---|
| 67-007 | LG 965 | X | 1 |
| 67-008 | LG 965 | X | 1 |
| 67-009 | LG 965 | X | 1 |
| 67-010 | LG 965 | X | 1 |
| 67-011 | LG 965 | X | 1 |
| 67-012 | LG 965 | X | 1 |
| 67-013 | LG 965 | X | 1 |
| 67-014 | LG 965 | X | 1 |
| 67-015 | LG 965 | X | 1 |
| 67-017 | LG 965 | X | 1 |
| 67-018 | LG 965 | X | 1 |
| 67-019 | LG 965 | X | 1 |
| 67-020 | LG 965 | X | 1 |
| 67-021 | LG 965 | X | 1 |
| 67-022 | LG 965 | X | 1 |
| 67-024 | LG 965 | X | 1 |
| 67-026 | LG 965 | X | 1 |
| 67-109-0 | SFS 69 | X | 1 |
| 67-110 | SFS 68 | X | 1 |
| 67-111 | SFS 68 | X | 1 |
| 67-112 | SFS 68 | X | 1 |
| 67-113 | SFS 68 | X | 1 |
| 67-214 | SFS 69 | X | 1 |
| 67-215 | SFS 69 | X | 1 |
| 67-216 | SFS 69 | X | 1 |
| 67-217 | SFS 69 | X | 1 |
| 67-221 | SFS 70 | X | 1 |
| 67-222 | | X | 1 |
| 67-224 | SFS 70 | X | 1 |
| 67-225 | SFS 70 | X | 1 |
| 67-226 | SFS 70 | X | 1 |
| 68-204 | LG 962 | X | 1 |
| 68-210 | LG 962 | X | 1 |
| 68-211 | LG 962 | X | 1 |
| 68-213 | LG 962 | X | 1 |
| 68-214 | LG 962 | X | 1 |
| 68-373 | LG 962 | X | 1 |
| 68-374 | LG 962 | X | 1 |
| 69-001 | LG 982 | N | |
| 69-004 | LG 982 | N | |
| 69-005 | LG 982 | N | |
| 69-007 | LG 193 | X | 1 |
| 69-008 | LG 982 | N | |
| 69-010 | LG 982 | N | |
| 69-012 | LG 982 | N | |
| 69-013 | | N | |
| 69-014 | | N | |
| 69-023 | LG 192 | X | 1 |
| 69-030 | LG 193 | X | 1 |
| 69-031 | LG 199 | X | 1 |
| 69-032 | LG 198 | X | 1 |
| 69-034 | LG 217 | X | 1 |
| 69-036 | LG 181 | X | 1 |
| 69-046 | LG 979 | X | 10 |
| 69-170 | LG 981 | X | 16 |
| 69-171 | LG 981 | X | 16 |
| 69-172 | LG 981 | X | 10 |
| 69-173 | LG 981 | X | 16 |
| 69-174 | LG 981 | X | 16 |
| 69-175 | LG 981 | X | 16 |
| 69-176 | LG 981 | X | 10 |
| 69-177 | LG 981 | X | 18 |
| 69-190 | LG 980 | X | 10 |
| 69-191 | LG 980 | X | 10 |
| 69-194 | LG 980 | X | 18 |
| 69-195 | LG 980 | X | 16 |
| 69-196 | LG 980 | X | 10 |
| 69-197 | LG 980 | X | 18 |
| 69-200 | LG 979 | X | 16 |
| 69-201 | LG 979 | X | 10 |
| 69-202 | LG 979 | X | 10 |

| OREGON | Page | Code | Pk. |
|---|---|---|---|
| 69-239-0 | | X | 6 |
| 69-241-0 | | X | 6 |
| 69-242-0 | | X | 6 |
| 69-243-0 | | X | 6 |
| 69-244-0 | | X | 6 |
| 69-245-0 | | X | 6 |
| 69-246-0 | | X | 6 |
| 69-247-0 | | X | 6 |
| 69-248-0 | | X | 6 |
| 69-249-0 | | X | 6 |
| 69-250-0 | | X | 6 |
| 69-251-0 | | X | 6 |
| 69-252-0 | | X | 6 |
| 69-253-0 | | X | 6 |
| 69-254-0 | | X | 6 |
| 69-255-0 | | X | 6 |
| 69-256-0 | | X | 6 |
| 69-257-0 | | X | 6 |
| 69-258-0 | | X | 6 |
| 69-259-0 | | X | 6 |
| 69-260-0 | | X | 6 |
| 69-261-0 | | X | 6 |
| 69-262-0 | | X | 6 |
| 69-263-0 | | X | 6 |
| 69-264-0 | | X | 6 |
| 69-265-0 | | X | 6 |
| 69-266-0 | | X | 6 |
| 69-267-0 | | X | 6 |
| 69-281 | LG 814 | X | 12 |
| 69-282 | LG 817 | X | 12 |
| 69-322 | LG 200 | X | 1 |
| 69-331 | LG 218 | X | 1 |
| 69-347 | LG 194 | X | 1 |
| 69-350 | | X | 216 |
| 69-352 | | X | 32 |
| 69-353 | | X | 12 |
| 69-354 | | X | 6 |
| 69-356 | | X | 180 |
| 69-358 | | X | 32 |
| 69-359 | | X | 12 |
| 69-360 | | X | 6 |
| 69-362 | | X | 180 |
| 69-364 | LG 982 | X | 32 |
| 69-365 | LG 982 | X | 12 |
| 69-366 | LG 982 | X | 6 |
| 69-368 | | X | 160 |
| 69-370 | | X | 32 |
| 69-371 | | X | 12 |
| 69-372 | | X | 6 |
| 69-374 | | X | 90 |
| 69-376 | | X | 32 |
| 69-377 | | X | 12 |
| 69-378 | | X | 6 |
| 69-380 | | X | 135 |
| 69-382 | LG 982 | X | 32 |
| 69-383 | LG 982 | X | 12 |
| 69-384 | LG 982 | X | 6 |
| 69-386 | | X | 32 |
| 69-387 | | X | 12 |
| 69-388 | | X | 6 |
| 69-389 | | X | 32 |
| 69-390 | | X | 12 |
| 69-391 | | X | 6 |
| 69-395 | LG 206 | X | 1 |
| 69-400 | | X | 300 |
| 69-402 | | X | 32 |
| 69-403 | | X | 12 |
| 69-404 | | X | 6 |
| 69-406 | | X | 135 |
| 69-408 | | X | 32 |
| 69-409 | | X | 12 |

N = New Item
F = NLA after inventories are sold

D = Discontinued after 2019 catalog
X = Active part number

# 2019 Numerical Index

| OREGON | Page | Code | Pk. |
|---|---|---|---|
| 69-410 | | X | 6 |
| 69-412 | | X | 135 |
| 69-414 | LG 982 | X | 32 |
| 69-415 | LG 982 | X | 12 |
| 69-416 | LG 982 | X | 6 |
| 69-418 | | X | 120 |
| 69-420 | | X | 32 |
| 69-421 | | X | 12 |
| 69-422 | | X | 6 |
| 69-424 | | X | 108 |
| 69-426 | | X | 32 |
| 69-427 | | X | 12 |
| 69-428 | | X | 6 |
| 69-430 | | X | 180 |
| 69-432 | | X | 32 |
| 69-433 | | X | 12 |
| 69-434 | | X | 6 |
| 69-440 | | X | 300 |
| 69-442 | | X | 32 |
| 69-443 | | X | 12 |
| 69-444 | | X | 6 |
| 69-446 | | X | 300 |
| 69-448 | | X | 32 |
| 69-449 | | X | 12 |
| 69-450 | | X | 6 |
| 69-452 | | X | 240 |
| 69-454 | | X | 32 |
| 69-455 | | X | 12 |
| 69-456 | | X | 6 |
| 69-458 | | X | 200 |
| 69-460 | | X | 32 |
| 69-461 | | X | 12 |
| 69-462 | | X | 6 |
| 69-464 | | X | 120 |
| 69-466 | | X | 32 |
| 69-467 | | X | 12 |
| 69-468 | | X | 6 |
| 69-470 | | X | 135 |
| 69-472 | LG 982 | X | 32 |
| 69-473 | LG 982 | X | 12 |
| 69-474 | LG 982 | X | 6 |
| 69-476 | | X | 80 |
| 69-478 | | X | 32 |
| 69-479 | | X | 12 |
| 69-480 | | X | 6 |
| 69-483 | | X | 32 |
| 69-484 | | X | 12 |
| 69-485 | | X | 6 |
| 69-486 | | X | 32 |
| 69-487 | | X | 12 |
| 69-488 | | X | 6 |
| 69-507 | LG 767 | X | 5 |
| 69-508 | LG 775 | X | 5 |
| 69-509 | LG 774 | X | 5 |
| 69-510 | LG 775 | X | 5 |
| 69-511 | LG 774 | X | 5 |
| 69-520 | | X | 240 |
| 69-522 | | X | 32 |
| 69-523 | | X | 12 |
| 69-524 | | X | 6 |
| 69-526 | | X | 300 |
| 69-528 | | X | 32 |
| 69-529 | | X | 12 |
| 69-530 | | X | 6 |
| 69-532 | | X | 240 |
| 69-534 | | X | 32 |
| 69-535 | | X | 12 |
| 69-536 | | X | 6 |
| 69-538 | | X | 240 |
| 69-540 | | X | 32 |
| 69-541 | | X | 12 |

| OREGON | Page | Code | Pk. |
|---|---|---|---|
| 69-542 | | X | 6 |
| 69-544 | | X | 160 |
| 69-546 | | X | 32 |
| 69-547 | | X | 12 |
| 69-548 | | X | 6 |
| 69-550 | | X | 160 |
| 69-552 | | X | 32 |
| 69-553 | | X | 12 |
| 69-554 | | X | 6 |
| 69-556 | | X | 108 |
| 69-558 | | X | 32 |
| 69-559 | | X | 12 |
| 69-560 | | X | 6 |
| 69-592 | LG 982 | N | |
| 69-593 | LG 982 | N | |
| 69-594 | LG 982 | N | |
| 69-595 | LG 982 | N | |
| 69-596 | LG 982 | N | |
| 69-597 | LG 982 | N | |
| 69-598 | LG 982 | N | |
| 69-599 | LG 982 | N | |
| 69-600 | LG 982 | X | 6 |
| 69-601 | LG 982 | X | 1 |
| 69-602 | LG 982 | X | 1 |
| 69-603 | LG 982 | X | 1 |
| 69-604 | LG 982 | X | 1 |
| 69-605 | LG 982 | X | 1 |
| 69-606 | LG 982 | X | 1 |
| 69-607 | LG 982 | X | 1 |
| 69-608 | LG 982 | X | 1 |
| 69-609 | LG 982 | X | 1 |
| 69-610 | LG 982 | X | 1 |
| 69-611 | LG 982 | X | 1 |
| 690-521-0 | LG 368 | X | 3 |
| 690-617-0 | LG 368 | X | 3 |
| 690-618-0 | LG 368 | X | 3 |
| 70-142 | LG 958 | X | 1 |
| 70-143 | LG 958 | X | 1 |
| 70-144 | LG 959 | X | 1 |
| 70-145 | LG 959 | X | 1 |
| 70-146 | LG 959 | X | 1 |
| 70-147 | LG 960 | X | 1 |
| 70-148 | LG 960 | X | 1 |
| 70-149 | LG 960 | X | 1 |
| 70-150 | LG 960 | X | 1 |
| 70-151 | LG 960 | X | 1 |
| 70-152 | LG 960 | X | 1 |
| 70-153 | LG 960 | X | 1 |
| 70-154 | LG 961 | X | 1 |
| 70-156 | LG 961 | X | 1 |
| 70-157 | LG 960 | X | 1 |
| 70-158 | LG 964 | X | 1 |
| 70-159 | LG 964 | X | 1 |
| 70-160 | LG 964 | X | 1 |
| 70-161 | LG 964 | X | 1 |
| 70-162 | LG 964 | X | 1 |
| 70-163 | LG 964 | X | 1 |
| 70-164 | LG 964 | X | 1 |
| 70-165 | LG 964 | X | 1 |
| 70-166 | LG 964 | X | 1 |
| 70-301 | LG 959 | X | 1 |
| 70-302 | LG 959 | X | 1 |
| 70-306 | LG 960 | X | 1 |
| 70-307 | LG 960 | X | 1 |
| 70-308 | LG 959 | X | 1 |
| 70-311 | LG 960 | X | 1 |
| 70-312 | LG 959 | X | 1 |
| 70-314 | LG 959 | X | 1 |
| 70-315 | LG 960 | X | 1 |
| 70-316 | LG 959 | X | 1 |
| 70-317 | LG 959 | X | 1 |

| OREGON | Page | Code | Pk. |
|---|---|---|---|
| 70-320 | LG 959 | X | 1 |
| 70-321 | LG 960 | X | 1 |
| 70-326 | LG 959 | X | 1 |
| 70-328 | LG 959 | X | 1 |
| 70-329 | LG 960 | X | 1 |
| 70-330 | LG 959 | X | 1 |
| 70-331 | LG 959 | X | 1 |
| 70-332 | LG 959 | X | 1 |
| 70-333 | LG 963 | X | 1 |
| 70-334 | LG 959 | X | 1 |
| 70-335 | LG 959 | X | 1 |
| 70-338 | LG 959 | X | 1 |
| 70-339 | LG 959 | X | 1 |
| 70-340 | LG 959 | X | 1 |
| 70-343 | LG 958 | X | 1 |
| 70-344 | LG 959 | X | 1 |
| 70-349 | LG 959 | X | 1 |
| 70-351 | LG 959 | X | 1 |
| 70-352 | LG 959 | X | 1 |
| 70-353 | LG 958 | X | 1 |
| 70-355 | LG 959 | X | 1 |
| 70-356 | LG 958 | X | 1 |
| 70-357 | LG 958 | X | 1 |
| 70-358 | LG 958 | X | 1 |
| 70-359 | LG 958 | X | 1 |
| 70-361 | LG 958 | X | 1 |
| 70-362 | LG 958 | X | 1 |
| 70-363 | LG 963 | X | 1 |
| 70-364 | LG 961 | X | 1 |
| 70-365 | LG 961 | X | 1 |
| 70-366 | LG 961 | X | 1 |
| 70-367 | LG 961 | X | 1 |
| 70-368 | LG 961 | X | 1 |
| 70-369 | LG 961 | X | 1 |
| 70-370 | LG 961 | X | 1 |
| 70-371 | LG 961 | X | 1 |
| 70-372 | LG 961 | X | 1 |
| 70-373 | LG 961 | X | 1 |
| 70-375 | LG 958 | X | 1 |
| 70-376 | LG 958 | X | 1 |
| 70-377 | LG 960 | X | 1 |
| 70-378 | LG 958 | X | 1 |
| 70-379 | LG 963 | X | 1 |
| 70-380 | LG 958 | X | 1 |
| 70-392 | LG 961 | X | 1 |
| 70-393 | LG 958 | X | 1 |
| 70-394 | LG 958 | X | 1 |
| 70-396 | LG 961 | X | 1 |
| 70-397 | LG 958 | X | 1 |
| 70-398 | LG 959 | X | 1 |
| 70-399 | LG 960 | X | 1 |
| 70-403 | LG 958 | X | 1 |
| 70-404 | LG 958 | X | 1 |
| 70-405 | LG 958 | X | 1 |
| 70-409 | LG 960 | X | 1 |
| 70-410 | LG 962 | X | 1 |
| 70-411 | LG 962 | X | 1 |
| 70-412 | LG 962 | X | 1 |
| 70-413 | LG 962 | X | 1 |
| 70-414 | LG 962 | X | 1 |
| 70-415 | LG 962 | X | 1 |
| 70-416 | LG 962 | X | 1 |
| 70-417 | LG 962 | X | 1 |
| 70-418 | LG 962 | X | 1 |
| 70-419 | LG 962 | X | 1 |
| 70-420 | LG 962 | X | 1 |
| 70-421 | LG 962 | X | 1 |
| 70-422 | LG 964 | X | 1 |
| 70-700 | SFS 69 | X | 1 |
| 70-701 | LG 964 | X | 1 |
| 70-703 | SFS 69 | X | 1 |



N = New Item
F = NLA after inventories are sold

D = Discontinued after 2019 catalog
X = Active part number

| OREGON | Page | Code | Pk. |
|---|---|---|---|
| 70-706 | LG 964 | X | 1 |
| 70-710 | LG 964 | X | 1 |
| 70-721 | SFS 69 | X | 1 |
| 71-001 | LG 957 | X | 1 |
| 71-002 | LG 957 | X | 1 |
| 71-003 | LG 956 | X | 1 |
| 71-004 | LG 956 | X | 1 |
| 71-096 | LG 956 | X | 1 |
| 71-097 | LG 956 | X | 1 |
| 71-098 | LG 956 | X | 1 |
| 71-099 | LG 956 | X | 1 |
| 71-100 | LG 956 | X | 1 |
| 71-101 | LG 956 | X | 1 |
| 71-102 | LG 956 | X | 1 |
| 71-103 | LG 956 | X | 1 |
| 71-104 | LG 956 | X | 1 |
| 71-105 | LG 957 | X | 1 |
| 71-106 | LG 957 | X | 1 |
| 71-107 | LG 957 | X | 1 |
| 71-108 | LG 957 | X | 1 |
| 71-109 | LG 956 | X | 1 |
| 71-110 | LG 956 | X | 1 |
| 71-111 | LG 957 | X | 1 |
| 71-250 | LG 956 | X | 1 |
| 71-273 | LG 957 | X | 1 |
| 71-274 | LG 956 | X | 1 |
| 71-275 | LG 956 | X | 1 |
| 71-276 | LG 956 | X | 1 |
| 71-277 | LG 956 | X | 1 |
| 71-278 | | X | 1 |
| 71-280 | LG 956 | X | 1 |
| 71-283 | LG 957 | X | 1 |
| 71-322 | LG 957 | X | 1 |
| 71-400 | LG 956 | X | 1 |
| 71-401 | LG 956 | X | 1 |
| 71-402 | LG 956 | X | 1 |
| 71-403 | LG 956 | X | 1 |
| 71-404 | | X | 1 |
| 71-405 | LG 956 | X | 1 |
| 71-406 | LG 956 | X | 1 |
| 71-407 | LG 956 | X | 1 |
| 71-408 | LG 957 | X | 1 |
| 71-409 | LG 956 | X | 1 |
| 71-410 | LG 956 | X | 1 |
| 71-411 | LG 956 | X | 1 |
| 71-412 | LG 956 | X | 1 |
| 71-415 | LG 956 | X | 1 |
| 71-417 | LG 957 | X | 1 |
| 71-418 | LG 957 | X | 1 |
| 71-424-0 | LG 957 | X | 1 |
| 71-425-0 | LG 957 | X | 1 |
| 71-500 | | X | 1 |
| 71-511 | LG 956 | X | 1 |
| 71-600 | LG 956 | X | 1 |
| 71-602 | LG 956 | X | 1 |
| 71-610 | LG 956 | X | 1 |
| 71-800 | LG 956 | X | 1 |
| 71-801 | LG 956 | X | 1 |
| 71-816 | LG 956 | X | 1 |
| 72-001 | LG 1031 | X | 1 |
| 72-003 | LG 1031 | X | 1 |
| 72-004 | LG 1035 | X | 1 |
| 72-005 | LG 1036 | X | 1 |
| 72-014 | LG 1031 | X | 1 |
| 72-015 | LG 1039 | X | 1 |
| 72-020 | LG 1039 | X | 1 |
| 72-021 | LG 1040 | X | 1 |
| 72-022 | LG 1033 | X | 1 |
| 72-024 | LG 1035 | X | 1 |
| 72-025 | LG 1039 | X | 1 |
| 72-026 | LG 1039 | X | 1 |

| OREGON | Page | Code | Pk. |
|---|---|---|---|
| 72-027 | LG 1039 | X | 1 |
| 72-029 | LG 1042 | X | 1 |
| 72-031 | LG 1038 | X | 1 |
| 72-032 | LG 1038 | X | 1 |
| 72-033 | LG 1031 | X | 1 |
| 72-034 | LG 1041 | X | 1 |
| 72-035 | LG 1041 | X | 1 |
| 72-036 | LG 1041 | X | 1 |
| 72-038 | LG 1041 | X | 1 |
| 72-050 | LG 1039 | X | 1 |
| 72-051 | LG 1039 | X | 1 |
| 72-052 | LG 1033 | X | 1 |
| 72-054 | LG 1034 | X | 1 |
| 72-072 | LG 1035 | X | 1 |
| 72-073 | LG 1035 | X | 1 |
| 72-076 | LG 1031 | X | 1 |
| 72-077 | LG 1031 | X | 1 |
| 72-078 | | X | 1 |
| 72-080 | LG 241 | N | 1 |
| 72-094 | LG 1042 | X | 1 |
| 72-098 | LG 1040 | X | 1 |
| 72-099 | LG 1040 | X | 1 |
| 72-100 | | X | 1 |
| 72-106 | LG 1029 | X | 1 |
| 72-107 | LG 1029 | X | 1 |
| 72-108 | LG 1031 | X | 1 |
| 72-109 | LG 1037 | X | 1 |
| 72-110 | LG 1030 | X | 1 |
| 72-112 | LG 1034 | X | 1 |
| 72-113 | LG 1035 | X | 1 |
| 72-114 | LG 1035 | X | 1 |
| 72-115 | LG 1033 | X | 1 |
| 72-117 | LG 1036 | X | 1 |
| 72-119 | LG 1040 | X | 1 |
| 72-129 | LG 1041 | X | 1 |
| 72-131 | LG 1041 | X | 1 |
| 72-133 | LG 1040 | X | 1 |
| 72-134 | LG 1040 | X | 1 |
| 72-135 | LG 1040 | X | 1 |
| 72-136 | LG 1032 | X | 1 |
| 72-137 | LG 1032 | X | 1 |
| 72-138 | LG 1032 | X | 1 |
| 72-139 | LG 1032 | X | 1 |
| 72-161 | LG 1038 | X | 1 |
| 72-162 | LG 1038 | X | 1 |
| 72-163 | LG 1040 | X | 1 |
| 72-164 | LG 1040 | X | 1 |
| 72-165 | LG 1041 | X | 1 |
| 72-166 | LG 1037 | X | 1 |
| 72-167 | LG 1037 | X | 1 |
| 72-168 | LG 1037 | X | 1 |
| 72-169 | LG 1033 | X | 1 |
| 72-170 | LG 1033 | X | 1 |
| 72-172 | LG 1033 | X | 1 |
| 72-301 | LG 1037 | X | 1 |
| 72-304 | LG 1038 | X | 1 |
| 72-306 | LG 1038 | X | 1 |
| 72-307 | LG 1038 | X | 1 |
| 72-308-1 | LG 1042 | X | 1 |
| 72-309 | LG 1042 | X | 1 |
| 72-311-1 | LG 1039 | X | 1 |
| 72-312 | LG 1038 | X | 1 |
| 72-313 | LG 1038 | X | 1 |
| 72-316 | LG 1042 | X | 1 |
| 72-318 | LG 1042 | X | 1 |
| 72-319 | LG 1042 | X | 1 |
| 72-322 | LG 1041 | X | 1 |
| 72-323 | LG 1041 | X | 1 |
| 72-341 | LG 1045 | N | 1 |
| 72-342 | LG 1043 | N | 1 |
| 72-343 | | N | 1 |

| OREGON | Page | Code | Pk. |
|---|---|---|---|
| 72-344 | LG 1032 | N | 1 |
| 72-345 | | N | 1 |
| 72-346 | LG 1035 | N | 1 |
| 72-347 | LG 1046 | N | 1 |
| 72-348 | LG 1046 | N | 1 |
| 72-406 | LG 1029 | X | 1 |
| 72-407 | LG 1029 | X | 1 |
| 72-408 | LG 1029 | X | 1 |
| 72-409 | LG 1030 | X | 1 |
| 72-410 | LG 1030 | X | 1 |
| 72-413 | LG 1030 | X | 1 |
| 72-414 | LG 1030 | X | 1 |
| 72-420 | LG 1047 | X | 1 |
| 72-427 | LG 1029 | X | 1 |
| 72-430 | LG 1034 | X | 1 |
| 72-436 | LG 1034 | X | 1 |
| 72-437 | LG 1030 | X | 1 |
| 72-442 | LG 1037 | X | 1 |
| 72-446 | LG 1030 | X | 1 |
| 72-449 | LG 1030 | X | 1 |
| 72-450 | LG 1037 | X | 1 |
| 72-456 | LG 1036 | X | 1 |
| 72-458 | LG 1031 | X | 1 |
| 72-500 | LG 1034 | X | 1 |
| 72-508 | LG 1034 | X | 1 |
| 72-510 | LG 1036 | X | 1 |
| 72-701 | LG 1044 | X | 1 |
| 72-722 | LG 1045 | X | 1 |
| 72-723 | LG 1043 | X | 1 |
| 72-725 | LG 1044 | X | 1 |
| 72-728 | LG 1044 | X | 1 |
| 72-729 | LG 1044 | X | 1 |
| 72-735 | LG 1045 | X | 1 |
| 72-736 | LG 1045 | X | 1 |
| 72-737 | LG 1045 | X | 1 |
| 72-738 | LG 1045 | X | 1 |
| 72-739 | LG 1046 | X | 1 |
| 72-741 | LG 1046 | X | 1 |
| 72-745 | LG 1033 | X | 1 |
| 72-746 | LG 1032 | X | 1 |
| 72-747 | LG 1036 | X | 1 |
| 72-749 | LG 1046 | X | 1 |
| 72-756 | LG 1046 | X | 1 |
| 72-758 | LG 1042 | X | 1 |
| 72-765 | LG 1043 | X | 1 |
| 72-795 | LG 1044 | X | 1 |
| 72-796 | LG 1043 | X | 1 |
| 72-800 | LG 1047 | X | 1 |
| 72-804 | LG 1047 | X | 1 |
| 73-001 | LG 847 | X | 1 |
| 73-003 | LG 847 | X | 1 |
| 73-006 | LG 846 | X | 1 |
| 73-008 | LG 848 | X | 1 |
| 73-013 | LG 849 | X | 1 |
| 73-014 | LG 849 | X | 1 |
| 73-016 | LG 846 | X | 1 |
| 73-017 | LG 848 | X | 1 |
| 73-018 | LG 849 | X | 1 |
| 73-019 | LG 849 | X | 1 |
| 73-020 | LG 850 | X | 1 |
| 73-022 | LG 847 | X | 1 |
| 73-023 | LG 847 | X | 1 |
| 73-025 | LG 855 | X | 1 |
| 73-026 | LG 851 | X | 1 |
| 73-027 | LG 850 | X | 1 |
| 73-028 | LG 850 | X | 1 |
| 73-029 | LG 847 | X | 1 |
| 73-030 | LG 849 | X | 1 |
| 73-031 | LG 850 | X | 1 |
| 73-036 | LG 849 | X | 1 |
| 73-037 | LG 847 | X | 1 |

N = New Item
F = NLA after inventories are sold

D = Discontinued after 2019 catalog
X = Active part number

# 2019 Numerical Index

| OREGON | Page | Code | Pk. |
|---|---|---|---|
| 73-038 | LG 851 | X | 1 |
| 73-039 | LG 846 | X | 1 |
| 73-040 | LG 849 | X | 1 |
| 73-043 | LG 847 | X | 1 |
| 73-044 | LG 849 | X | 1 |
| 73-046 | LG 847 | X | 1 |
| 73-048 | LG 846 | X | 1 |
| 73-049 | LG 847 | X | 1 |
| 73-050 | LG 846 | X | 1 |
| 73-051 | LG 846 | X | 1 |
| 73-052 | LG 850 | X | 1 |
| 73-053 | LG 850 | X | 1 |
| 73-054 | LG 848 | X | 1 |
| 73-055 | LG 848 | X | 1 |
| 73-056 | LG 848 | X | 1 |
| 73-057 | LG 848 | X | 1 |
| 73-058 | LG 848 | X | 1 |
| 73-059 | LG 850 | X | 1 |
| 73-100 | LG 850 | X | 1 |
| 73-351 | LG 843 | X | 1 |
| 73-352-0 | LG 844 | X | 1 |
| 73-353-0 | LG 844 | X | 1 |
| 73-560 | LG 844 | X | 1 |
| 73-561 | LG 843 | X | 1 |
| 73-562-0 | LG 842 | X | 1 |
| 73-564-0 | LG 843 | X | 1 |
| 73-800 | LG 714 | N | 1 |
| 73-802 | LG 714 | N | 1 |
| 73-819 | LG 843 | X | 1 |
| 73-821 | LG 842 | X | 1 |
| 73-822 | LG 842 | X | 1 |
| 73-823 | LG 849 | X | 1 |
| 73-824 | LG 847 | X | 1 |
| 73-825 | LG 850 | X | 1 |
| 73-826 | | X | 1 |
| 73-827 | | X | 1 |
| 73-828 | LG 856 | X | 1 |
| 73-829 | LG 856 | X | 1 |
| 73-830 | LG 856 | X | 1 |
| 73-831 | LG 856 | X | 1 |
| 73-832 | LG 855 | X | 1 |
| 73-833 | LG 855 | X | 1 |
| 73-834 | LG 856 | X | 1 |
| 73-835 | LG 849 | X | 1 |
| 73-836 | LG 802 | X | 1 |
| 73-837 | LG 802 | X | 1 |
| 74-015 | LG 720 | N | 1 |
| 74-016 | LG 709 | N | 1 |
| 74-018 | LG 709 | N | 1 |
| 74-019 | LG 715 | N | 1 |
| 74-020 | LG 714 | N | 1 |
| 74-021 | LG 703 | N | 1 |
| 74-054 | LG 721 | X | 1 |
| 74-072 | LG 721 | X | 1 |
| 74-317 | LG 721 | X | 1 |
| 74-732 | LG 721 | X | 1 |
| 75-000 | LG 262 | X | 1 |
| 75-001 | LG 308 | X | 1 |
| 75-002 | LG 301 | X | 1 |
| 75-004 | LG 301 | X | 1 |
| 75-005 | LG 307 | X | 1 |
| 75-008 | LG 301 | X | 1 |
| 75-009 | LG 301 | X | 1 |
| 75-010 | LG 311 | X | 1 |
| 75-012 | LG 301 | X | 1 |
| 75-016 | LG 301 | X | 1 |
| 75-018 | LG 301 | X | 1 |
| 75-020 | LG 302 | X | 1 |
| 75-021 | LG 274 | X | 1 |
| 75-022 | LG 307 | X | 1 |
| 75-023 | LG 302 | X | 1 |

| OREGON | Page | Code | Pk. |
|---|---|---|---|
| 75-024 | LG 302 | X | 1 |
| 75-025 | LG 253 | X | 1 |
| 75-026 | LG 307 | X | 1 |
| 75-027 | LG 302 | X | 1 |
| 75-028 | LG 302 | X | 1 |
| 75-029 | LG 253 | X | 1 |
| 75-031 | LG 278 | X | 1 |
| 75-035 | LG 302 | X | 1 |
| 75-036 | LG 297 | X | 1 |
| 75-038 | LG 307 | X | 1 |
| 75-040 | LG 306 | X | 1 |
| 75-041 | LG 255 | X | 1 |
| 75-042 | LG 308 | X | 1 |
| 75-043 | LG 312 | X | 1 |
| 75-044 | LG 313 | X | 1 |
| 75-045 | LG 307 | X | 1 |
| 75-047 | LG 313 | X | 1 |
| 75-048 | LG 313 | X | 1 |
| 75-052 | LG 313 | X | 1 |
| 75-054 | LG 312 | X | 1 |
| 75-055 | LG 255 | X | 1 |
| 75-057 | LG 307 | X | 1 |
| 75-058 | LG 255 | X | 1 |
| 75-059 | LG 318 | X | 1 |
| 75-060 | LG 322 | X | 1 |
| 75-061 | LG 307 | X | 1 |
| 75-063 | LG 307 | X | 1 |
| 75-065 | LG 307 | X | 1 |
| 75-066 | LG 251 | X | 1 |
| 75-067 | LG 862 | X | 1 |
| 75-068 | LG 318 | X | 1 |
| 75-072 | LG 268 | X | 1 |
| 75-073 | LG 319 | X | 1 |
| 75-075 | LG 322 | X | 1 |
| 75-079 | LG 301 | X | 1 |
| 75-080 | LG 862 | X | 1 |
| 75-084 | LG 265 | X | 1 |
| 75-086 | LG 265 | X | 1 |
| 75-087 | LG 265 | X | 1 |
| 75-090 | LG 301 | X | 1 |
| 75-091 | LG 302 | X | 1 |
| 75-092 | LG 304 | X | 1 |
| 75-094 | LG 252 | X | 1 |
| 75-095 | LG 268 | X | 1 |
| 75-096 | LG 265 | X | 1 |
| 75-097 | LG 289 | X | 1 |
| 75-098 | LG 251 | X | 1 |
| 75-099 | LG 262 | X | 1 |
| 75-101 | LG 269 | X | 1 |
| 75-103 | LG 308 | X | 1 |
| 75-105 | LG 319 | X | 1 |
| 75-106 | LG 261 | X | 1 |
| 75-107 | LG 254 | X | 1 |
| 75-108 | LG 289 | X | 1 |
| 75-109 | LG 303 | X | 1 |
| 75-111 | LG 306 | X | 1 |
| 75-112 | LG 306 | X | 1 |
| 75-113 | LG 281 | X | 1 |
| 75-114 | LG 281 | X | 1 |
| 75-115 | LG 260 | X | 1 |
| 75-117 | LG 265 | X | 1 |
| 75-118 | LG 302 | X | 1 |
| 75-119 | LG 302 | X | 1 |
| 75-120 | LG 300 | X | 1 |
| 75-122 | LG 307 | X | 1 |
| 75-123 | LG 300 | X | 1 |
| 75-125 | LG 269 | X | 1 |
| 75-128 | LG 253 | X | 1 |
| 75-129 | LG 255 | X | 1 |
| 75-130 | LG 269 | X | 1 |
| 75-131 | LG 269 | X | 1 |

| OREGON | Page | Code | Pk. |
|---|---|---|---|
| 75-133 | LG 269 | X | 1 |
| 75-134 | LG 275 | X | 1 |
| 75-135 | LG 308 | X | 1 |
| 75-136 | LG 309 | X | 1 |
| 75-137 | LG 309 | X | 1 |
| 75-138 | LG 310 | X | 1 |
| 75-142 | LG 310 | X | 1 |
| 75-143 | LG 310 | X | 1 |
| 75-144 | LG 284 | X | 1 |
| 75-145 | LG 300 | X | 1 |
| 75-148 | LG 300 | X | 1 |
| 75-151 | LG 308 | X | 1 |
| 75-152 | LG 308 | X | 1 |
| 75-154 | LG 312 | X | 1 |
| 75-155 | LG 312 | X | 1 |
| 75-157 | LG 251 | X | 1 |
| 75-158 | LG 251 | X | 1 |
| 75-159 | LG 303 | X | 1 |
| 75-160 | LG 303 | X | 1 |
| 75-161 | LG 255 | X | 1 |
| 75-163 | LG 261 | X | 1 |
| 75-164 | LG 262 | X | 1 |
| 75-165 | LG 322 | X | 1 |
| 75-167 | LG 289 | X | 1 |
| 75-168 | LG 310 | X | 1 |
| 75-169 | LG 290 | X | 1 |
| 75-170 | LG 290 | X | 1 |
| 75-171 | LG 289 | X | 1 |
| 75-177 | LG 281 | X | 1 |
| 75-178 | LG 281 | X | 1 |
| 75-179 | LG 310 | X | 1 |
| 75-180 | LG 254 | X | 1 |
| 75-181 | LG 280 | X | 1 |
| 75-186 | LG 281 | X | 1 |
| 75-188 | LG 256 | X | 1 |
| 75-192 | LG 251 | X | 1 |
| 75-193 | LG 269 | X | 1 |
| 75-194 | LG 289 | X | 1 |
| 75-195 | LG 254 | X | 1 |
| 75-196 | LG 290 | X | 1 |
| 75-197 | LG 262 | X | 1 |
| 75-199 | LG 254 | X | 1 |
| 75-204 | LG 309 | X | 1 |
| 75-205 | LG 322 | X | 1 |
| 75-207 | LG 256 | X | 1 |
| 75-208 | LG 277 | X | 1 |
| 75-209 | LG 308 | X | 1 |
| 75-210 | LG 309 | X | 1 |
| 75-211 | LG 277 | X | 1 |
| 75-212 | LG 268 | X | 1 |
| 75-214 | LG 309 | X | 1 |
| 75-215 | LG 313 | X | 1 |
| 75-216 | LG 257 | X | 1 |
| 75-218 | LG 316 | X | 1 |
| 75-219 | LG 319 | X | 1 |
| 75-221 | LG 280 | X | 1 |
| 75-222 | LG 252 | X | 1 |
| 75-223 | LG 269 | X | 1 |
| 75-225 | LG 322 | X | 1 |
| 75-226 | LG 281 | X | 1 |
| 75-227 | LG 281 | X | 1 |
| 75-230 | LG 281 | X | 1 |
| 75-231 | LG 281 | X | 1 |
| 75-232 | LG 281 | X | 1 |
| 75-234 | LG 281 | X | 1 |
| 75-235 | LG 281 | X | 1 |
| 75-236 | LG 282 | X | 1 |
| 75-240 | LG 297 | X | 1 |
| 75-242 | LG 288 | X | 1 |
| 75-243 | LG 288 | X | 1 |
| 75-246 | LG 295 | X | 1 |



N = New Item
F = NLA after inventories are sold

D = Discontinued after 2019 catalog
X = Active part number

| OREGON | Page | Code | Pk. |
|---|---|---|---|
| 75-247 | LG 295 | X | 1 |
| 75-248 | LG 294 | X | 1 |
| 75-249 | LG 305 | X | 1 |
| 75-260 | LG 312 | X | 1 |
| 75-263 | LG 304 | X | 1 |
| 75-264 | LG 304 | X | 1 |
| 75-266 | LG 254 | X | 1 |
| 75-267 | LG 309 | X | 1 |
| 75-268 | LG 313 | X | 1 |
| 75-269 | LG 252 | X | 1 |
| 75-270 | LG 257 | X | 1 |
| 75-272 | LG 684 | X | 1 |
| 75-273 | LG 320 | X | 1 |
| 75-274 | LG 322 | X | 1 |
| 75-275 | LG 322 | X | 1 |
| 75-277 | LG 324 | X | 1 |
| 75-278 | LG 324 | X | 1 |
| 75-281 | LG 301 | X | 1 |
| 75-283 | LG 256 | X | 1 |
| 75-289 | LG 863 | X | 1 |
| 75-292 | LG 281 | X | 1 |
| 75-295 | LG 295 | X | 1 |
| 75-296 | LG 295 | X | 1 |
| 75-297 | LG 295 | X | 1 |
| 75-298 | LG 295 | X | 1 |
| 75-299 | LG 295 | X | 1 |
| 75-300 | LG 295 | X | 1 |
| 75-320 | LG 334 | X | 1 |
| 75-321 | LG 334 | X | 1 |
| 75-322 | LG 334 | X | 1 |
| 75-323 | LG 334 | X | 1 |
| 75-324 | LG 334 | X | 1 |
| 75-325 | LG 334 | X | 1 |
| 75-326 | LG 334 | X | 1 |
| 75-327 | LG 334 | X | 1 |
| 75-328 | LG 334 | X | 1 |
| 75-329 | LG 334 | X | 1 |
| 75-330 | LG 334 | X | 1 |
| 75-331 | LG 334 | X | 1 |
| 75-332 | LG 334 | X | 1 |
| 75-333 | LG 334 | X | 1 |
| 75-334 | LG 334 | X | 1 |
| 75-335 | LG 334 | X | 1 |
| 75-336 | LG 334 | X | 1 |
| 75-337 | LG 334 | X | 1 |
| 75-338 | LG 334 | X | 1 |
| 75-339 | LG 334 | X | 1 |
| 75-340 | LG 334 | X | 1 |
| 75-341 | LG 334 | X | 1 |
| 75-342 | LG 334 | X | 1 |
| 75-343 | LG 334 | X | 1 |
| 75-344 | LG 334 | X | 1 |
| 75-345 | LG 334 | X | 1 |
| 75-346 | LG 334 | X | 1 |
| 75-348 | LG 334 | X | 1 |
| 75-349 | LG 334 | X | 1 |
| 75-350 | LG 334 | X | 1 |
| 75-353 | LG 319 | X | 1 |
| 75-354 | LG 319 | X | 1 |
| 75-360 | LG 294 | X | 1 |
| 75-361 | LG 254 | X | 1 |
| 75-362 | LG 256 | X | 1 |
| 75-363 | LG 304 | X | 1 |
| 75-364 | LG 304 | X | 1 |
| 75-365 | LG 862 | X | 1 |
| 75-367 | LG 306 | X | 1 |
| 75-368 | LG 309 | X | 1 |
| 75-370 | LG 257 | X | 1 |
| 75-371 | LG 316 | X | 1 |
| 75-372 | LG 316 | X | 1 |
| 75-373 | LG 322 | X | 1 |

| OREGON | Page | Code | Pk. |
|---|---|---|---|
| 75-378 | LG 324 | X | 1 |
| 75-380 | LG 324 | X | 1 |
| 75-400 | LG 335 | X | 1 |
| 75-401 | LG 335 | X | 1 |
| 75-402 | LG 335 | X | 1 |
| 75-403 | LG 256 | X | 1 |
| 75-404 | LG 335 | X | 1 |
| 75-405 | LG 335 | X | 1 |
| 75-406 | LG 335 | X | 1 |
| 75-407 | LG 335 | X | 1 |
| 75-408 | LG 335 | X | 1 |
| 75-409 | LG 335 | X | 1 |
| 75-410 | LG 335 | X | 1 |
| 75-411 | LG 335 | X | 1 |
| 75-412 | LG 335 | X | 1 |
| 75-413 | LG 335 | X | 1 |
| 75-414 | LG 335 | X | 1 |
| 75-417 | LG 335 | X | 1 |
| 75-418 | LG 334 | X | 1 |
| 75-419 | LG 334 | X | 1 |
| 75-420 | LG 334 | X | 1 |
| 75-421 | LG 334 | X | 1 |
| 75-422 | LG 334 | X | 1 |
| 75-423 | LG 334 | X | 1 |
| 75-424 | LG 334 | X | 1 |
| 75-425 | LG 334 | X | 1 |
| 75-426 | LG 334 | X | 1 |
| 75-427 | LG 334 | X | 1 |
| 75-428 | LG 334 | X | 1 |
| 75-429 | LG 334 | X | 1 |
| 75-430 | SFS 59 | X | 1 |
| 75-431 | LG 334 | X | 1 |
| 75-432 | LG 334 | X | 1 |
| 75-433 | LG 334 | X | 1 |
| 75-434 | LG 334 | X | 1 |
| 75-435 | LG 334 | X | 1 |
| 75-436 | LG 334 | X | 1 |
| 75-437 | LG 334 | X | 1 |
| 75-438 | LG 334 | X | 1 |
| 75-439 | LG 334 | X | 1 |
| 75-440 | LG 334 | X | 1 |
| 75-441 | LG 334 | X | 1 |
| 75-442 | LG 334 | X | 1 |
| 75-443 | LG 334 | X | 1 |
| 75-444 | LG 334 | X | 1 |
| 75-445 | LG 334 | X | 1 |
| 75-446 | LG 334 | X | 1 |
| 75-447 | LG 334 | X | 1 |
| 75-448 | LG 334 | X | 1 |
| 75-449 | LG 334 | X | 1 |
| 75-450 | LG 334 | X | 1 |
| 75-451 | LG 334 | X | 1 |
| 75-452 | LG 334 | X | 1 |
| 75-453 | LG 334 | X | 1 |
| 75-454 | LG 334 | X | 1 |
| 75-455 | LG 334 | X | 1 |
| 75-456 | LG 334 | X | 1 |
| 75-457 | LG 334 | X | 1 |
| 75-458 | LG 334 | X | 1 |
| 75-459 | LG 334 | X | 1 |
| 75-460 | LG 334 | X | 1 |
| 75-461 | LG 334 | X | 1 |
| 75-462 | LG 334 | X | 1 |
| 75-463 | LG 334 | X | 1 |
| 75-464 | LG 334 | X | 1 |
| 75-465 | LG 334 | X | 1 |
| 75-466 | LG 334 | X | 1 |
| 75-467 | LG 334 | X | 1 |
| 75-468 | LG 334 | X | 1 |
| 75-469 | LG 335 | X | 1 |
| 75-470 | LG 335 | X | 1 |

| OREGON | Page | Code | Pk. |
|---|---|---|---|
| 75-471 | LG 335 | X | 1 |
| 75-472 | LG 335 | X | 1 |
| 75-473 | LG 335 | X | 1 |
| 75-474 | LG 335 | X | 1 |
| 75-475 | LG 335 | X | 1 |
| 75-476 | LG 335 | X | 1 |
| 75-477 | LG 335 | X | 1 |
| 75-478 | LG 335 | X | 1 |
| 75-479 | LG 335 | X | 1 |
| 75-480 | LG 335 | X | 1 |
| 75-481 | LG 335 | X | 1 |
| 75-482 | LG 335 | X | 1 |
| 75-483 | LG 335 | X | 1 |
| 75-484 | LG 335 | X | 1 |
| 75-485 | LG 335 | X | 1 |
| 75-486 | LG 335 | X | 1 |
| 75-487 | LG 335 | X | 1 |
| 75-488 | LG 335 | X | 1 |
| 75-489 | LG 335 | X | 1 |
| 75-490 | LG 335 | X | 1 |
| 75-491 | LG 335 | X | 1 |
| 75-492 | LG 335 | X | 1 |
| 75-493 | LG 335 | X | 1 |
| 75-494 | LG 335 | X | 1 |
| 75-495 | LG 335 | X | 1 |
| 75-496 | LG 335 | X | 1 |
| 75-497 | LG 335 | X | 1 |
| 75-498 | LG 335 | X | 1 |
| 75-499 | LG 335 | X | 1 |
| 75-500 | LG 335 | X | 1 |
| 75-501 | LG 288 | N | 1 |
| 75-502 | LG 300 | N | 1 |
| 75-503 | LG 256 | X | 1 |
| 75-508 | LG 319 | X | 1 |
| 75-509 | LG 279 | N | 1 |
| 75-510 | LG 279 | N | 1 |
| 75-513 | LG 279 | N | 1 |
| 75-514 | LG 282 | N | 1 |
| 75-515 | LG 282 | N | 1 |
| 75-516 | LG 282 | N | 1 |
| 75-517 | LG 269 | N | 1 |
| 75-518 | LG 301 | N | 1 |
| 75-525 | LG 334 | X | 1 |
| 75-527 | LG 334 | X | 1 |
| 75-528 | LG 334 | X | 1 |
| 75-529 | LG 334 | X | 1 |
| 75-530 | LG 334 | X | 1 |
| 75-531 | LG 334 | X | 1 |
| 75-532 | LG 334 | X | 1 |
| 75-533 | LG 334 | X | 1 |
| 75-534 | LG 334 | X | 1 |
| 75-535 | LG 334 | X | 1 |
| 75-536 | LG 334 | X | 1 |
| 75-537 | LG 334 | X | 1 |
| 75-538 | LG 334 | X | 1 |
| 75-539 | LG 334 | X | 1 |
| 75-540 | LG 334 | X | 1 |
| 75-541 | LG 334 | X | 1 |
| 75-542 | LG 334 | X | 1 |
| 75-543 | LG 334 | X | 1 |
| 75-544 | LG 334 | X | 1 |
| 75-545 | LG 334 | X | 1 |
| 75-546 | LG 334 | X | 1 |
| 75-547 | LG 334 | X | 1 |
| 75-548 | LG 334 | X | 1 |
| 75-549 | LG 334 | X | 1 |
| 75-550 | LG 334 | X | 1 |
| 75-551 | LG 334 | X | 1 |
| 75-552 | LG 334 | X | 1 |
| 75-553 | LG 334 | X | 1 |
| 75-554 | LG 334 | X | 1 |

N = New Item
F = NLA after inventories are sold

D = Discontinued after 2019 catalog
X = Active part number

# 2019 Numerical Index

| OREGON | Page | Code | Pk. |
|---|---|---|---|
| 75-555 | LG 334 | X | 1 |
| 75-556 | LG 334 | X | 1 |
| 75-557 | LG 334 | X | 1 |
| 75-558 | LG 253 | X | 1 |
| 75-559 | LG 334 | X | 1 |
| 75-560 | LG 334 | X | 1 |
| 75-561 | LG 334 | X | 1 |
| 75-562 | LG 334 | X | 1 |
| 75-563 | LG 253 | X | 1 |
| 75-564 | LG 334 | X | 1 |
| 75-565 | LG 253 | X | 1 |
| 75-566 | LG 334 | X | 1 |
| 75-567 | LG 334 | X | 1 |
| 75-568 | LG 334 | X | 1 |
| 75-569 | LG 335 | X | 1 |
| 75-570 | LG 335 | X | 1 |
| 75-571 | LG 335 | X | 1 |
| 75-572 | LG 335 | X | 1 |
| 75-573 | LG 335 | X | 1 |
| 75-574 | LG 335 | X | 1 |
| 75-575 | LG 335 | X | 1 |
| 75-576 | LG 335 | X | 1 |
| 75-577 | LG 335 | X | 1 |
| 75-578 | LG 335 | X | 1 |
| 75-579 | LG 335 | X | 1 |
| 75-580 | LG 335 | X | 1 |
| 75-581 | LG 335 | X | 1 |
| 75-582 | LG 254 | X | 1 |
| 75-583 | LG 335 | X | 1 |
| 75-584 | LG 335 | X | 1 |
| 75-585 | LG 335 | X | 1 |
| 75-586 | LG 335 | X | 1 |
| 75-587 | LG 335 | X | 1 |
| 75-588 | LG 335 | X | 1 |
| 75-589 | LG 335 | X | 1 |
| 75-590 | LG 335 | X | 1 |
| 75-591 | LG 335 | X | 1 |
| 75-592 | LG 335 | X | 1 |
| 75-593 | LG 335 | X | 1 |
| 75-594 | LG 335 | X | 1 |
| 75-595 | LG 335 | X | 1 |
| 75-596 | LG 335 | X | 1 |
| 75-597 | LG 335 | X | 1 |
| 75-598 | LG 335 | X | 1 |
| 75-599 | LG 335 | X | 1 |
| 75-600 | LG 276 | X | 1 |
| 75-625 | LG 313 | X | 1 |
| 75-629 | LG 314 | X | 1 |
| 75-631 | LG 314 | X | 1 |
| 75-632 | LG 314 | X | 1 |
| 75-634 | LG 314 | X | 1 |
| 75-635 | LG 314 | X | 1 |
| 75-637 | LG 253 | X | 1 |
| 75-641 | LG 314 | X | 1 |
| 75-642 | LG 314 | X | 1 |
| 75-644 | LG 314 | X | 1 |
| 75-645 | LG 314 | X | 1 |
| 75-646 | LG 257 | X | 1 |
| 75-648 | LG 257 | X | 1 |
| 75-649 | LG 258 | X | 1 |
| 75-654 | LG 263 | X | 1 |
| 75-655 | LG 274 | X | 1 |
| 75-656 | LG 274 | X | 1 |
| 75-658 | LG 275 | X | 1 |
| 75-659 | LG 275 | X | 1 |
| 75-661 | LG 277 | X | 1 |
| 75-662 | LG 258 | X | 1 |
| 75-663 | LG 279 | X | 1 |
| 75-664 | LG 279 | X | 1 |
| 75-665 | LG 279 | X | 1 |
| 75-667 | LG 282 | X | 1 |

| OREGON | Page | Code | Pk. |
|---|---|---|---|
| 75-669 | LG 284 | X | 1 |
| 75-670 | LG 288 | X | 1 |
| 75-671 | LG 287 | X | 1 |
| 75-672 | LG 294 | X | 1 |
| 75-673 | LG 305 | X | 1 |
| 75-674 | LG 303 | X | 1 |
| 75-675 | LG 303 | X | 1 |
| 75-676 | LG 304 | X | 1 |
| 75-677 | LG 304 | X | 1 |
| 75-679 | LG 309 | X | 1 |
| 75-681 | LG 313 | X | 1 |
| 75-682 | LG 258 | X | 1 |
| 75-684 | LG 322 | X | 1 |
| 75-685 | LG 324 | X | 1 |
| 75-686 | LG 324 | X | 1 |
| 75-687 | LG 297 | X | 1 |
| 75-688 | LG 297 | X | 1 |
| 75-701 | LG 273 | X | 1 |
| 75-703 | LG 295 | X | 1 |
| 75-706 | LG 256 | X | 1 |
| 75-708 | LG 295 | X | 1 |
| 75-709 | LG 305 | X | 1 |
| 75-710 | LG 257 | X | 1 |
| 75-711 | LG 310 | X | 1 |
| 75-712 | LG 310 | X | 1 |
| 75-713 | LG 310 | X | 1 |
| 75-714 | LG 276 | X | 1 |
| 75-715 | LG 313 | X | 1 |
| 75-716 | LG 276 | X | 1 |
| 75-720 | LG 270 | X | 1 |
| 75-724 | LG 310 | X | 1 |
| 75-727 | LG 319 | X | 1 |
| 75-755 | LG 258 | X | 1 |
| 75-756 | LG 279 | X | 1 |
| 75-757 | LG 256 | X | 1 |
| 75-759 | LG 279 | X | 1 |
| 75-798 | LG 253 | X | 1 |
| 75-799 | LG 293 | X | 1 |
| 75-800 | LG 257 | X | 1 |
| 75-801 | LG 296 | X | 1 |
| 75-802 | LG 296 | X | 1 |
| 75-803 | LG 258 | X | 1 |
| 75-804 | LG 296 | X | 1 |
| 75-806 | LG 293 | X | 1 |
| 75-807 | LG 255 | X | 1 |
| 75-808 | LG 256 | X | 1 |
| 75-810 | LG 257 | X | 1 |
| 75-811 | LG 254 | X | 1 |
| 75-812 | LG 275 | X | 1 |
| 75-813 | LG 276 | X | 1 |
| 75-814 | LG 276 | X | 1 |
| 75-815 | LG 277 | X | 1 |
| 75-816 | LG 257 | X | 1 |
| 75-818 | LG 253 | X | 1 |
| 75-819 | LG 292 | X | 1 |
| 75-820 | LG 273 | X | 1 |
| 75-821 | LG 254 | X | 1 |
| 75-822 | LG 254 | X | 1 |
| 75-823 | LG 254 | X | 1 |
| 75-824 | LG 274 | X | 1 |
| 75-886 | LG 276 | X | 1 |
| 75-887 | LG 323 | X | 1 |
| 75-888 | LG 322 | X | 1 |
| 75-889 | LG 252 | X | 1 |
| 75-890 | LG 289 | X | 1 |
| 75-892 | LG 255 | X | 1 |
| 75-893 | LG 263 | X | 1 |
| 75-894 | LG 263 | X | 1 |
| 75-895 | LG 263 | X | 1 |
| 75-897 | LG 262 | X | 1 |
| 75-898 | LG 262 | X | 1 |

| OREGON | Page | Code | Pk. |
|---|---|---|---|
| 75-899 | LG 263 | X | 1 |
| 75-902 | LG 331 | X | 10 |
| 75-904 | LG 313 | X | 1 |
| 75-906 | LG 251 | X | 1 |
| 75-907 | LG 264 | X | 1 |
| 75-908 | LG 265 | X | 1 |
| 75-909 | LG 251 | X | 1 |
| 75-910 | LG 331 | X | 1 |
| 75-911 | LG 262 | X | 1 |
| 75-912 | LG 255 | X | 1 |
| 75-913 | LG 291 | X | 1 |
| 75-914 | LG 291 | X | 1 |
| 75-917 | LG 282 | X | 1 |
| 75-918 | LG 293 | X | 1 |
| 75-919 | LG 293 | X | 1 |
| 75-934 | LG 310 | X | 1 |
| 75-935 | LG 255 | X | 1 |
| 75-936 | LG 290 | X | 1 |
| 75-938 | LG 250 | X | 1 |
| 75-939 | LG 322 | X | 1 |
| 75-943 | LG 283 | X | 1 |
| 75-944 | LG 284 | X | 1 |
| 75-945 | LG 284 | X | 1 |
| 75-946 | LG 283 | X | 1 |
| 75-948 | LG 331 | X | 1 |
| 75-949 | LG 330 | X | 1 |
| 75-951 | LG 331 | X | 1 |
| 75-952 | LG 330 | X | 1 |
| 75-954 | LG 284 | X | 1 |
| 75-955 | LG 278 | X | 1 |
| 75-956 | LG 278 | X | 1 |
| 75-957 | LG 282 | X | 1 |
| 75-960 | LG 257 | X | 1 |
| 75-961 | LG 281 | X | 1 |
| 75-963 | LG 281 | X | 1 |
| 75-964 | LG 309 | X | 1 |
| 75-967 | LG 258 | X | 1 |
| 75-972 | LG 295 | X | 1 |
| 75-973 | LG 294 | X | 1 |
| 75-974 | LG 294 | X | 1 |
| 75-975 | LG 294 | X | 1 |
| 75-976 | LG 292 | X | 1 |
| 75-977 | LG 310 | X | 1 |
| 75-978 | LG 293 | X | 1 |
| 75-979 | LG 255 | X | 1 |
| 75-980 | LG 863 | X | 1 |
| 75-983 | LG 862 | X | 1 |
| 75-984 | LG 257 | X | 1 |
| 75-992 | LG 293 | X | 1 |
| 75-993 | LG 303 | X | 1 |
| 75-994 | LG 304 | X | 1 |
| 75-995 | LG 303 | X | 1 |
| 75-996 | LG 309 | X | 1 |
| 75-999 | LG 253 | X | 1 |
| 75-A100 | LG 337 | X | 1 |
| 75-A101 | LG 337 | X | 1 |
| 75-A102 | LG 337 | X | 1 |
| 75-A103 | LG 337 | X | 1 |
| 75-A104 | LG 337 | X | 1 |
| 75-A105 | LG 337 | X | 1 |
| 75-A106 | LG 337 | X | 1 |
| 75-A107 | LG 337 | X | 1 |
| 75-A108 | LG 337 | X | 1 |
| 75-A109 | LG 337 | X | 1 |
| 75-A110 | LG 337 | X | 1 |
| 75-A111 | LG 337 | X | 1 |
| 75-A112 | LG 337 | X | 1 |
| 75-A113 | LG 337 | X | 1 |
| 75-A114 | LG 337 | X | 1 |
| 75-A115 | LG 337 | X | 1 |
| 75-A116 | LG 337 | X | 1 |



N = New Item
F = NLA after inventories are sold

D = Discontinued after 2019 catalog
X = Active part number

| OREGON | Page | Code | Pk. |
|---|---|---|---|
| 75-A117 | LG 337 | X | 1 |
| 75-A118 | LG 337 | X | 1 |
| 75-A119 | LG 337 | X | 1 |
| 75-A120 | LG 337 | X | 1 |
| 75-A121 | LG 337 | X | 1 |
| 75-A122 | LG 337 | X | 1 |
| 75-A123 | LG 337 | X | 1 |
| 75-A124 | LG 337 | X | 1 |
| 75-A125 | LG 337 | X | 1 |
| 75-A126 | LG 337 | X | 1 |
| 75-A127 | LG 337 | X | 1 |
| 75-A128 | LG 337 | X | 1 |
| 75-A129 | LG 337 | X | 1 |
| 75-A130 | LG 337 | X | 1 |
| 75-A131 | LG 337 | X | 1 |
| 75-A132 | LG 337 | X | 1 |
| 75-A133 | LG 337 | X | 1 |
| 75-A134 | LG 337 | X | 1 |
| 75-A135 | LG 337 | X | 1 |
| 75-A136 | LG 337 | X | 1 |
| 75-A137 | LG 337 | X | 1 |
| 75-A138 | LG 337 | X | 1 |
| 75-A139 | LG 337 | X | 1 |
| 75-A14 | LG 336 | X | 1 |
| 75-A140 | LG 337 | X | 1 |
| 75-A141 | LG 337 | X | 1 |
| 75-A142 | LG 337 | X | 1 |
| 75-A143 | LG 337 | X | 1 |
| 75-A144 | LG 337 | X | 1 |
| 75-A145 | LG 337 | X | 1 |
| 75-A146 | LG 337 | X | 1 |
| 75-A147 | LG 337 | X | 1 |
| 75-A148 | LG 337 | X | 1 |
| 75-A149 | LG 337 | X | 1 |
| 75-A15 | LG 336 | X | 1 |
| 75-A150 | LG 337 | X | 1 |
| 75-A16 | LG 336 | X | 1 |
| 75-A17 | LG 336 | X | 1 |
| 75-A18 | LG 336 | X | 1 |
| 75-A19 | LG 336 | X | 1 |
| 75-A20 | LG 336 | X | 1 |
| 75-A21 | LG 336 | X | 1 |
| 75-A22 | LG 336 | X | 1 |
| 75-A23 | LG 336 | X | 1 |
| 75-A24 | LG 336 | X | 1 |
| 75-A25 | LG 336 | X | 1 |
| 75-A26 | LG 336 | X | 1 |
| 75-A27 | LG 336 | X | 1 |
| 75-A28 | LG 336 | X | 1 |
| 75-A29 | LG 336 | X | 1 |
| 75-A30 | LG 336 | X | 1 |
| 75-A31 | LG 336 | X | 1 |
| 75-A32 | LG 336 | X | 1 |
| 75-A33 | LG 336 | X | 1 |
| 75-A34 | LG 336 | X | 1 |
| 75-A35 | LG 336 | X | 1 |
| 75-A36 | LG 336 | X | 1 |
| 75-A37 | LG 336 | X | 1 |
| 75-A38 | LG 336 | X | 1 |
| 75-A39 | LG 336 | X | 1 |
| 75-A40 | LG 336 | X | 1 |
| 75-A41 | LG 336 | X | 1 |
| 75-A42 | LG 336 | X | 1 |
| 75-A43 | LG 336 | X | 1 |
| 75-A44 | LG 336 | X | 1 |
| 75-A45 | LG 336 | X | 1 |
| 75-A46 | LG 336 | X | 1 |
| 75-A47 | LG 336 | X | 1 |
| 75-A48 | LG 336 | X | 1 |
| 75-A49 | LG 336 | X | 1 |
| 75-A50 | LG 336 | X | 1 |

| OREGON | Page | Code | Pk. |
|---|---|---|---|
| 75-A51 | LG 336 | X | 1 |
| 75-A52 | LG 336 | X | 1 |
| 75-A53 | LG 336 | X | 1 |
| 75-A54 | LG 336 | X | 1 |
| 75-A55 | LG 336 | X | 1 |
| 75-A56 | LG 336 | X | 1 |
| 75-A57 | LG 336 | X | 1 |
| 75-A58 | LG 336 | X | 1 |
| 75-A59 | LG 336 | X | 1 |
| 75-A60 | LG 336 | X | 1 |
| 75-A61 | LG 336 | X | 1 |
| 75-A62 | LG 336 | X | 1 |
| 75-A63 | LG 336 | X | 1 |
| 75-A64 | LG 336 | X | 1 |
| 75-A65 | LG 336 | X | 1 |
| 75-A66 | LG 336 | X | 1 |
| 75-A67 | LG 336 | X | 1 |
| 75-A68 | LG 336 | X | 1 |
| 75-A69 | LG 336 | X | 1 |
| 75-A70 | LG 336 | X | 1 |
| 75-A71 | LG 336 | X | 1 |
| 75-A72 | LG 336 | X | 1 |
| 75-A73 | LG 336 | X | 1 |
| 75-A74 | LG 336 | X | 1 |
| 75-A75 | LG 336 | X | 1 |
| 75-A76 | LG 336 | X | 1 |
| 75-A77 | LG 336 | X | 1 |
| 75-A78 | LG 336 | X | 1 |
| 75-A79 | LG 336 | X | 1 |
| 75-A80 | LG 336 | X | 1 |
| 75-A81 | LG 336 | X | 1 |
| 75-A82 | LG 336 | X | 1 |
| 75-A83 | LG 336 | X | 1 |
| 75-A84 | LG 336 | X | 1 |
| 75-A85 | LG 336 | X | 1 |
| 75-A86 | LG 336 | X | 1 |
| 75-A87 | LG 336 | X | 1 |
| 75-A88 | LG 336 | X | 1 |
| 75-A89 | LG 336 | X | 1 |
| 75-A90 | LG 336 | X | 1 |
| 75-A91 | LG 336 | X | 1 |
| 75-A92 | LG 337 | X | 1 |
| 75-A93 | LG 337 | X | 1 |
| 75-A94 | LG 337 | X | 1 |
| 75-A95 | LG 337 | X | 1 |
| 75-A96 | LG 337 | X | 1 |
| 75-A97 | LG 337 | X | 1 |
| 75-A98 | LG 337 | X | 1 |
| 75-A99 | LG 337 | X | 1 |
| 75-B100 | LG 337 | X | 1 |
| 75-B101 | LG 337 | X | 1 |
| 75-B102 | LG 337 | X | 1 |
| 75-B103 | LG 337 | X | 1 |
| 75-B104 | LG 337 | X | 1 |
| 75-B105 | LG 337 | X | 1 |
| 75-B106 | LG 337 | X | 1 |
| 75-B107 | LG 337 | X | 1 |
| 75-B108 | LG 337 | X | 1 |
| 75-B109 | LG 337 | X | 1 |
| 75-B110 | LG 337 | X | 1 |
| 75-B111 | LG 337 | X | 1 |
| 75-B112 | LG 337 | X | 1 |
| 75-B113 | LG 337 | X | 1 |
| 75-B114 | LG 337 | X | 1 |
| 75-B115 | LG 337 | X | 1 |
| 75-B116 | LG 337 | X | 1 |
| 75-B117 | LG 337 | X | 1 |
| 75-B118 | LG 337 | X | 1 |
| 75-B119 | LG 337 | X | 1 |
| 75-B120 | LG 337 | X | 1 |
| 75-B121 | LG 337 | X | 1 |

| OREGON | Page | Code | Pk. |
|---|---|---|---|
| 75-B122 | LG 337 | X | 1 |
| 75-B123 | LG 337 | X | 1 |
| 75-B124 | LG 337 | X | 1 |
| 75-B125 | LG 337 | X | 1 |
| 75-B126 | LG 337 | X | 1 |
| 75-B127 | LG 337 | X | 1 |
| 75-B128 | LG 337 | X | 1 |
| 75-B129 | LG 337 | X | 1 |
| 75-B130 | LG 337 | X | 1 |
| 75-B131 | LG 337 | X | 1 |
| 75-B132 | LG 337 | X | 1 |
| 75-B133 | LG 337 | X | 1 |
| 75-B134 | LG 337 | X | 1 |
| 75-B135 | LG 337 | X | 1 |
| 75-B136 | LG 337 | X | 1 |
| 75-B137 | LG 337 | X | 1 |
| 75-B138 | LG 337 | X | 1 |
| 75-B139 | LG 337 | X | 1 |
| 75-B140 | LG 337 | X | 1 |
| 75-B141 | LG 337 | X | 1 |
| 75-B142 | LG 337 | X | 1 |
| 75-B143 | LG 337 | X | 1 |
| 75-B144 | LG 337 | X | 1 |
| 75-B145 | LG 337 | X | 1 |
| 75-B146 | LG 337 | X | 1 |
| 75-B147 | LG 337 | X | 1 |
| 75-B148 | LG 337 | X | 1 |
| 75-B149 | LG 337 | X | 1 |
| 75-B150 | LG 337 | X | 1 |
| 75-B19 | LG 336 | X | 1 |
| 75-B20 | LG 336 | X | 1 |
| 75-B21 | LG 336 | X | 1 |
| 75-B22 | LG 336 | X | 1 |
| 75-B23 | LG 336 | X | 1 |
| 75-B24 | LG 336 | X | 1 |
| 75-B25 | LG 336 | X | 1 |
| 75-B26 | LG 336 | X | 1 |
| 75-B27 | LG 336 | X | 1 |
| 75-B28 | LG 336 | X | 1 |
| 75-B29 | LG 336 | X | 1 |
| 75-B30 | LG 336 | X | 1 |
| 75-B31 | LG 336 | X | 1 |
| 75-B32 | LG 336 | X | 1 |
| 75-B33 | LG 336 | X | 1 |
| 75-B34 | LG 336 | X | 1 |
| 75-B35 | LG 336 | X | 1 |
| 75-B36 | LG 336 | X | 1 |
| 75-B37 | LG 336 | X | 1 |
| 75-B38 | LG 336 | X | 1 |
| 75-B39 | LG 336 | X | 1 |
| 75-B40 | LG 336 | X | 1 |
| 75-B41 | LG 336 | X | 1 |
| 75-B42 | LG 336 | X | 1 |
| 75-B43 | LG 336 | X | 1 |
| 75-B44 | LG 336 | X | 1 |
| 75-B45 | LG 336 | X | 1 |
| 75-B46 | LG 336 | X | 1 |
| 75-B47 | LG 336 | X | 1 |
| 75-B48 | LG 336 | X | 1 |
| 75-B49 | LG 336 | X | 1 |
| 75-B50 | LG 336 | X | 1 |
| 75-B51 | LG 336 | X | 1 |
| 75-B52 | LG 336 | X | 1 |
| 75-B53 | LG 336 | X | 1 |
| 75-B54 | LG 336 | X | 1 |
| 75-B55 | LG 336 | X | 1 |
| 75-B56 | LG 336 | X | 1 |
| 75-B57 | LG 336 | X | 1 |
| 75-B58 | LG 336 | X | 1 |
| 75-B59 | LG 336 | X | 1 |
| 75-B60 | LG 336 | X | 1 |

N = New Item
F = NLA after inventories are sold

D = Discontinued after 2019 catalog
X = Active part number

# 2019 Numerical Index

| OREGON | Page | Code | Pk. |
|---|---|---|---|
| **75-B61** | LG 336 | X | 1 |
| **75-B62** | LG 336 | X | 1 |
| **75-B63** | LG 336 | X | 1 |
| **75-B64** | LG 336 | X | 1 |
| **75-B65** | LG 336 | X | 1 |
| **75-B66** | LG 336 | X | 1 |
| **75-B67** | LG 336 | X | 1 |
| **75-B68** | LG 336 | X | 1 |
| **75-B69** | LG 336 | X | 1 |
| **75-B70** | LG 336 | X | 1 |
| **75-B71** | LG 336 | X | 1 |
| **75-B72** | LG 336 | X | 1 |
| **75-B73** | LG 336 | X | 1 |
| **75-B74** | LG 336 | X | 1 |
| **75-B75** | LG 336 | X | 1 |
| **75-B76** | LG 336 | X | 1 |
| **75-B77** | LG 336 | X | 1 |
| **75-B78** | LG 336 | X | 1 |
| **75-B79** | LG 336 | X | 1 |
| **75-B80** | LG 336 | X | 1 |
| **75-B81** | LG 336 | X | 1 |
| **75-B82** | LG 336 | X | 1 |
| **75-B83** | LG 336 | X | 1 |
| **75-B84** | LG 336 | X | 1 |
| **75-B85** | LG 336 | X | 1 |
| **75-B86** | LG 336 | X | 1 |
| **75-B87** | LG 336 | X | 1 |
| **75-B88** | LG 336 | X | 1 |
| **75-B89** | LG 336 | X | 1 |
| **75-B90** | LG 336 | X | 1 |
| **75-B91** | LG 337 | X | 1 |
| **75-B92** | LG 337 | X | 1 |
| **75-B93** | LG 337 | X | 1 |
| **75-B94** | LG 337 | X | 1 |
| **75-B95** | LG 337 | X | 1 |
| **75-B96** | LG 337 | X | 1 |
| **75-B97** | LG 337 | X | 1 |
| **75-B98** | LG 337 | X | 1 |
| **75-B99** | LG 337 | X | 1 |
| **76-002** | LG 726 | X | 1 |
| **76-014** | LG 726 | X | 1 |
| **76-015** | LG 804 | X | 1 |
| **76-018** | LG 938 | X | 1 |
| **76-019** | LG 938 | X | 1 |
| **76-020** | LG 802 | X | 1 |
| **76-021** | LG 938 | X | 1 |
| **76-025** | LG 941 | X | 1 |
| **76-031** | LG 804 | X | 1 |
| **76-034** | | X | 10 |
| **76-039** | LG 1037 | X | 1 |
| **76-040** | LG 941 | X | 1 |
| **76-041** | LG 940 | X | 1 |
| **76-042** | LG 939 | X | 1 |
| **76-043** | LG 940 | X | 1 |
| **76-044** | LG 940 | X | 1 |
| **76-050** | LG 941 | N | 1 |
| **76-051** | LG 941 | N | 1 |
| **76-052** | LG 940 | N | 1 |
| **76-053** | LG 940 | N | 1 |
| **76-055** | LG 940 | N | 1 |
| **76-056** | | N | 1 |
| **76-057** | LG 941 | N | 1 |
| **76-067-0** | LG 726 | X | 1 |
| **76-070-0** | LG 726 | X | 1 |
| **76-073-0** | LG 726 | X | 1 |
| **76-075** | LG 727 | X | 1 |
| **76-076** | LG 727 | X | 1 |
| **76-100** | LG 939 | X | 1 |
| **76-110** | LG 726 | X | 1 |
| **76-143** | LG 698 | X | 1 |
| **77-134** | LG 864 | N | 10 |

| OREGON | Page | Code | Pk. |
|---|---|---|---|
| **77-145** | LG 864 | N | 10 |
| **77-167** | LG 864 | N | 10 |
| **77-189** | LG 864 | N | 10 |
| **77-193** | LG 864 | N | 10 |
| **77-194** | LG 864 | N | 10 |
| **77-196** | LG 864 | N | 10 |
| **77-197** | LG 864 | N | 10 |
| **77-198** | LG 864 | N | 10 |
| **77-199** | LG 864 | N | 10 |
| **77-200** | LG 864 | N | 10 |
| **77-300-1** | LG 864 | X | 10 |
| **77-301-1** | LG 864 | X | 10 |
| **77-302-1** | LG 864 | X | 10 |
| **77-303-1** | LG 865 | X | 10 |
| **77-304-1** | LG 865 | X | 10 |
| **77-305-1** | LG 865 | X | 10 |
| **77-306-1** | LG 865 | X | 10 |
| **77-307-1** | LG 865 | X | 10 |
| **77-308-1** | LG 865 | X | 10 |
| **77-309-1** | LG 865 | X | 10 |
| **77-310-1** | LG 865 | X | 10 |
| **77-311-1** | LG 865 | X | 10 |
| **77-312-1** | LG 865 | X | 10 |
| **77-313-1** | LG 865 | X | 10 |
| **77-314-1** | LG 865 | X | 10 |
| **77-315-1** | LG 865 | X | 10 |
| **77-316-1** | LG 865 | X | 10 |
| **77-317-1** | LG 865 | X | 10 |
| **77-318-1** | LG 865 | X | 10 |
| **77-319-1** | LG 865 | X | 10 |
| **77-321-1** | LG 865 | X | 10 |
| **77-323-1** | LG 865 | X | 10 |
| **77-324-1** | LG 865 | X | 10 |
| **77-355-1** | LG 865 | X | 10 |
| **77-366** | | N | 10 |
| **77-400-0** | | X | 1 |
| **77-401** | | X | 1 |
| **77-404** | | X | 1 |
| **77-407** | | X | 1 |
| **77-411** | | X | 1 |
| **77-414** | | X | 1 |
| **77-415** | | X | 1 |
| **77-416** | | X | 1 |
| **78-000** | LG 823 | X | 1 |
| **78-003** | LG 839 | X | 1 |
| **78-005** | LG 823 | X | 1 |
| **78-006** | LG 828 | X | 1 |
| **78-007** | LG 833 | X | 1 |
| **78-009** | LG 827 | X | 1 |
| **78-010** | LG 827 | X | 1 |
| **78-011** | LG 827 | X | 1 |
| **78-013** | LG 825 | X | 1 |
| **78-014** | LG 825 | X | 1 |
| **78-019** | LG 831 | X | 1 |
| **78-020** | LG 825 | X | 1 |
| **78-021** | LG 832 | X | 1 |
| **78-022** | LG 827 | X | 1 |
| **78-023** | LG 822 | X | 1 |
| **78-025** | LG 829 | X | 1 |
| **78-026** | LG 822 | X | 1 |
| **78-027** | LG 832 | X | 1 |
| **78-028** | LG 831 | X | 1 |
| **78-029** | LG 831 | X | 1 |
| **78-031** | LG 826 | X | 1 |
| **78-032** | LG 822 | X | 1 |
| **78-033** | LG 834 | X | 1 |
| **78-034** | LG 822 | X | 1 |
| **78-037** | LG 822 | X | 1 |
| **78-040** | LG 823 | X | 1 |
| **78-041** | LG 823 | X | 1 |
| **78-043** | LG 824 | X | 1 |

| OREGON | Page | Code | Pk. |
|---|---|---|---|
| **78-044-1** | LG 834 | X | 1 |
| **78-045** | LG 828 | X | 1 |
| **78-046** | LG 826 | X | 1 |
| **78-047** | LG 832 | X | 1 |
| **78-048** | LG 833 | X | 1 |
| **78-049** | LG 833 | X | 1 |
| **78-050** | LG 831 | X | 1 |
| **78-051** | LG 824 | X | 1 |
| **78-052** | LG 824 | X | 1 |
| **78-053** | LG 824 | X | 1 |
| **78-054** | LG 824 | X | 1 |
| **78-055** | LG 833 | X | 1 |
| **78-056** | LG 825 | X | 1 |
| **78-062** | LG 835 | X | 1 |
| **78-065** | LG 832 | X | 1 |
| **78-066** | LG 838 | X | 1 |
| **78-098** | LG 832 | X | 1 |
| **78-100** | LG 249 | X | 10 |
| **78-101** | LG 249 | X | 10 |
| **78-102** | LG 823 | X | 10 |
| **78-103** | LG 823 | X | 10 |
| **78-104** | LG 823 | X | 1 |
| **78-105-0** | LG 823 | X | 1 |
| **78-106-0** | LG 823 | X | 1 |
| **78-110** | LG 833 | X | 1 |
| **78-111** | LG 826 | X | 1 |
| **78-112** | LG 829 | X | 1 |
| **78-113** | LG 829 | X | 1 |
| **78-114** | LG 829 | X | 1 |
| **78-116** | LG 826 | X | 1 |
| **78-118-0** | LG 830 | X | 1 |
| **78-121** | LG 827 | X | 1 |
| **78-128** | LG 829 | X | 1 |
| **78-129** | LG 830 | X | 1 |
| **78-130** | LG 829 | X | 1 |
| **78-131** | LG 823 | X | 1 |
| **78-132** | LG 830 | X | 1 |
| **78-133** | LG 831 | X | 1 |
| **78-134** | LG 829 | X | 1 |
| **78-300** | LG 833 | X | 1 |
| **78-640** | LG 835 | X | 1 |
| **78-641** | LG 835 | X | 1 |
| **78-642** | LG 841 | X | 1 |
| **78-643** | LG 835 | X | 1 |
| **78-644** | LG 835 | X | 1 |
| **78-646** | LG 841 | X | 1 |
| **78-649** | LG 841 | X | 1 |
| **78-650** | LG 835 | X | 1 |
| **78-651** | LG 835 | X | 1 |
| **78-673** | LG 839 | X | 1 |
| **78-675** | LG 839 | X | 1 |
| **78-676** | LG 839 | X | 1 |
| **78-677** | LG 839 | X | 1 |
| **78-678** | LG 835 | X | 1 |
| **78-680** | LG 840 | X | 1 |
| **78-690** | LG 840 | X | 1 |
| **79-000** | LG 802 | X | 1 |
| **79-724** | LG 556 | X | 1 |
| **79-728** | LG 556 | X | 1 |
| **80-014** | LG 727 | X | 1 |
| **80-015** | LG 853 | X | 1 |
| **80-016** | LG 853 | X | 10 |
| **80-017** | LG 852 | X | 10 |
| **80-018** | LG 852 | X | 10 |
| **80-019** | LG 852 | X | 10 |
| **80-036** | LG 727 | X | 1 |
| **80-037** | LG 727 | X | 10 |
| **80-122** | LG 340 | X | 1 |
| **80-145** | LG 341 | X | 1 |
| **80-146** | LG 341 | X | 1 |
| **80-740** | LG 852 | X | 10 |



N = New Item
F = NLA after inventories are sold

D = Discontinued after 2019 catalog
X = Active part number

| OREGON | Page | Code | Pk. |
|---|---|---|---|
| **80-741** | LG 852 | X | 10 |
| **80-742** | LG 852 | X | 10 |
| **80-743** | LG 852 | X | 10 |
| **80-745** | LG 728 | X | 10 |
| **80-746** | LG 852 | X | 10 |
| **80-747** | LG 852 | X | 10 |
| **80-748** | LG 852 | X | 10 |
| **80-749** | LG 853 | X | 1 |
| **81-010** | | X | 1 |
| **81-012** | LG 802 | X | 1 |
| **81-013** | LG 802 | X | 1 |
| **81-015** | LG 802 | X | 1 |
| **81-020** | LG 803 | X | 1 |
| **81-101** | | X | 1 |
| **81-102** | LG 805 | X | 1 |
| **82-010** | LG 869 | X | 1 |
| **82-011** | LG 869 | X | 1 |
| **82-012** | LG 872 | X | 1 |
| **82-013** | LG 891 | X | 1 |
| **82-014** | LG 871 | X | 1 |
| **82-014-B** | LG 871 | X | 1 |
| **82-015** | | X | 1 |
| **82-016** | LG 875 | X | 1 |
| **82-017** | LG 875 | X | 1 |
| **82-018** | LG 875 | X | 1 |
| **82-019** | LG 875 | X | 1 |
| **82-020** | LG 903 | X | 1 |
| **82-021** | LG 884 | X | 1 |
| **82-022** | LG 886 | X | 1 |
| **82-023** | LG 902 | X | 1 |
| **82-023-B** | LG 902 | X | 1 |
| **82-024** | LG 871 | X | 1 |
| **82-026** | LG 872 | X | 1 |
| **82-028** | LG 902 | X | 1 |
| **82-029** | | X | 1 |
| **82-040** | LG 890 | X | 1 |
| **82-041** | LG 890 | X | 1 |
| **82-042** | LG 891 | X | 1 |
| **82-043** | LG 899 | X | 1 |
| **82-044** | LG 879 | X | 1 |
| **82-051** | LG 898 | X | 1 |
| **82-053** | LG 905 | X | 1 |
| **82-054** | LG 898 | X | 1 |
| **82-055** | LG 887 | X | 1 |
| **82-056** | LG 886 | X | 1 |
| **82-057** | LG 905 | X | 1 |
| **82-058** | LG 898 | X | 1 |
| **82-100** | LG 802 | X | 1 |
| **82-101** | LG 888 | N | 1 |
| **82-102** | LG 889 | N | 1 |
| **82-103** | LG 889 | N | 1 |
| **82-104** | LG 881 | N | 1 |
| **82-105** | LG 900 | N | 1 |
| **82-106** | LG 882 | N | 1 |
| **82-108** | LG 873 | N | 1 |
| **82-109** | LG 901 | N | 1 |
| **82-110** | LG 882 | N | 1 |
| **82-111** | LG 905 | N | 1 |
| **82-126** | LG 873 | X | 1 |
| **82-127** | LG 899 | N | 1 |
| **82-128** | LG 881 | N | 1 |
| **82-129** | LG 873 | N | 1 |
| **82-130** | LG 880 | N | 1 |
| **82-131** | LG 900 | N | 1 |
| **82-132** | LG 900 | N | 1 |
| **82-220** | LG 871 | X | 1 |
| **82-221** | LG 872 | X | 1 |
| **82-225** | LG 871 | X | 1 |
| **82-225-B** | LG 871 | X | 1 |
| **82-243** | LG 902 | X | 1 |
| **82-243-B** | LG 902 | X | 1 |

| OREGON | Page | Code | Pk. |
|---|---|---|---|
| **82-244** | LG 910 | X | 10 |
| **82-245** | | X | 1 |
| **82-250** | LG 902 | X | 1 |
| **82-305** | LG 908 | X | 1 |
| **82-306** | LG 874 | X | 1 |
| **82-307-0** | LG 874 | X | 1 |
| **82-308** | LG 874 | X | 1 |
| **82-318** | LG 884 | X | 1 |
| **82-320** | LG 874 | X | 1 |
| **82-322** | LG 883 | X | 1 |
| **82-323** | LG 883 | X | 1 |
| **82-325** | LG 903 | X | 1 |
| **82-328** | LG 891 | X | 1 |
| **82-332** | LG 891 | X | 1 |
| **82-333** | LG 892 | X | 1 |
| **82-340** | LG 883 | X | 1 |
| **82-341** | LG 884 | X | 1 |
| **82-342** | LG 884 | X | 1 |
| **82-344** | LG 885 | X | 1 |
| **82-346** | LG 885 | X | 1 |
| **82-347** | LG 885 | X | 1 |
| **82-348** | LG 885 | X | 1 |
| **82-349** | LG 886 | X | 1 |
| **82-350** | LG 889 | X | 1 |
| **82-351** | LG 890 | X | 1 |
| **82-352** | LG 890 | X | 1 |
| **82-354** | LG 892 | X | 1 |
| **82-355** | LG 892 | X | 1 |
| **82-356** | LG 893 | X | 1 |
| **82-357** | LG 877 | X | 1 |
| **82-358** | LG 892 | X | 1 |
| **82-359** | LG 893 | X | 1 |
| **82-360** | LG 893 | X | 1 |
| **82-361** | LG 887 | X | 1 |
| **82-401** | LG 879 | X | 1 |
| **82-402** | LG 879 | X | 1 |
| **82-403** | LG 879 | X | 1 |
| **82-405** | LG 878 | X | 1 |
| **82-406** | LG 880 | X | 1 |
| **82-407** | LG 880 | X | 1 |
| **82-408** | LG 878 | X | 1 |
| **82-409** | LG 878 | X | 1 |
| **82-411** | LG 878 | X | 1 |
| **82-412** | LG 53 | X | 1 |
| **82-493** | LG 869 | X | 1 |
| **82-495** | LG 870 | X | 1 |
| **82-500** | LG 893 | X | 1 |
| **82-500-B** | LG 893 | X | 1 |
| **82-501** | LG 894 | X | 1 |
| **82-502** | LG 894 | X | 1 |
| **82-503** | LG 895 | X | 1 |
| **82-510** | LG 872 | X | 1 |
| **82-511** | LG 895 | X | 1 |
| **82-512** | LG 895 | X | 1 |
| **82-513-2** | LG 896 | X | 1 |
| **82-514** | LG 869 | X | 1 |
| **82-515** | LG 896 | X | 1 |
| **82-516** | LG 896 | X | 1 |
| **82-517** | LG 896 | X | 1 |
| **82-518** | LG 897 | X | 1 |
| **82-519** | LG 897 | X | 1 |
| **82-520** | LG 897 | X | 1 |
| **82-552** | LG 876 | X | 1 |
| **82-553** | LG 876 | X | 1 |
| **82-554** | LG 876 | X | 1 |
| **82-555** | LG 876 | X | 1 |
| **82-557** | LG 877 | X | 1 |
| **82-558** | LG 877 | X | 1 |
| **82-674** | LG 904 | X | 1 |
| **82-675** | LG 904 | X | 1 |
| **82-676** | LG 904 | X | 1 |

| OREGON | Page | Code | Pk. |
|---|---|---|---|
| **82-677** | LG 903 | X | 1 |
| **82-678** | LG 904 | X | 1 |
| **82-679** | LG 870 | X | 1 |
| **82-680** | LG 870 | X | 1 |
| **83-000** | LG 815 | X | 12 |
| **83-001** | LG 816 | N | 1 |
| **83-003** | | N | 1 |
| **83-010** | LG 819 | X | 12 |
| **83-011** | LG 819 | X | 12 |
| **83-012** | LG 819 | X | 12 |
| **83-013** | LG 817 | X | 12 |
| **83-014** | LG 819 | X | 1 |
| **83-028** | LG 817 | X | 12 |
| **83-029** | LG 815 | X | 12 |
| **83-030** | LG 815 | X | 12 |
| **83-280** | LG 815 | X | 12 |
| **83-282** | LG 817 | X | 12 |
| **83-283** | LG 818 | X | 12 |
| **83-284** | LG 818 | X | 12 |
| **83-285** | LG 814 | X | 12 |
| **83-300** | LG 819 | X | 12 |
| **83-301** | LG 816 | X | 12 |
| **83-302** | LG 816 | X | 1 |
| **83-400** | LG 819 | X | 1 |
| **83-401** | LG 817 | X | 1 |
| **83-402** | LG 817 | X | 1 |
| **83-403** | LG 818 | X | 1 |
| **83-404** | LG 818 | X | 1 |
| **83-501** | LG 817 | X | 1 |
| **83-502** | LG 817 | X | 1 |
| **83-503** | LG 818 | X | 1 |
| **84-001** | LG 675 | X | 1 |
| **84-002** | LG 675 | X | 1 |
| **84-004** | LG 675 | X | 1 |
| **84-005** | LG 675 | X | 1 |
| **84-006** | LG 675 | X | 1 |
| **84-007** | LG 675 | X | 1 |
| **84-008** | LG 675 | X | 1 |
| **84-009** | LG 675 | X | 1 |
| **84-010** | LG 913 | X | 1 |
| **84-011** | LG 675 | X | 1 |
| **84-012** | LG 675 | X | 1 |
| **84-013** | LG 675 | X | 1 |
| **84-014** | LG 856 | X | 1 |
| **84-027** | LG 675 | X | 1 |
| **84-028** | LG 675 | X | 1 |
| **84-029** | LG 675 | X | 1 |
| **84-030** | LG 675 | X | 1 |
| **84-031** | LG 675 | X | 1 |
| **84-101** | LG 954 | X | 1 |
| **84-102** | LG 954 | X | 1 |
| **84-103** | LG 954 | X | 1 |
| **85-001** | LG 908 | X | 1 |
| **85-005** | | X | 1 |
| **85-008** | LG 909 | X | 1 |
| **85-010** | | X | 1 |
| **85-011** | LG 909 | X | 1 |
| **85-012** | LG 909 | X | 1 |
| **85-017** | LG 907 | X | 1 |
| **85-023** | LG 907 | X | 1 |
| **85-028** | LG 908 | X | 1 |
| **85-029** | LG 909 | X | 1 |
| **85-032** | | X | 1 |
| **85-034** | LG 908 | X | 1 |
| **85-035** | LG 908 | X | 1 |
| **85-036** | LG 908 | X | 1 |
| **85-040** | | X | 1 |
| **85-041** | | X | 1 |
| **85-043** | | X | 1 |
| **85-044** | LG 906 | X | 1 |
| **85-045** | LG 906 | X | 1 |

N = New Item
F = NLA after inventories are sold

D = Discontinued after 2019 catalog
X = Active part number

# 2019 Numerical Index

| OREGON | Page | Code | Pk. |
|---|---|---|---|
| 85-047 | LG 906 | X | 1 |
| 85-048 | LG 906 | X | 1 |
| 85-049 | LG 906 | X | 1 |
| 85-050 | LG 907 | X | 1 |
| 85-051 | LG 907 | X | 1 |
| 85-052 | LG 907 | X | 1 |
| 85-053 | LG 907 | X | 1 |
| 85-054 | LG 906 | X | 1 |
| 85-055 | LG 906 | X | 1 |
| 85-112 | | N | 1 |
| 86-001 | LG 781 | X | 1 |
| 86-002 | LG 781 | N | 1 |
| 86-005 | LG 782 | X | 1 |
| 86-008 | LG 782 | X | 1 |
| 86-009 | LG 781 | X | 1 |
| 86-010 | LG 782 | X | 1 |
| 86-019 | LG 781 | X | 1 |
| 86-025 | LG 781 | X | 1 |
| 86-029 | LG 782 | X | 1 |
| 86-033 | LG 781 | X | 1 |
| 86-036 | LG 781 | X | 1 |
| 86-037 | LG 781 | X | 1 |
| 88-009 | SFS 62 | X | 1 |
| 88-010 | SFS 61 | X | 1 |
| 88-011 | SFS 62 | X | 1 |
| 88-012 | SFS 62 | X | 1 |
| 88-015 | SFS 60 | X | 1 |
| 88-016 | SFS 60 | X | 1 |
| 88-017 | SFS 62 | X | 1 |
| 88-018 | SFS 60 | X | 1 |
| 88-021 | SFS 59 | X | 1 |
| 88-022 | SFS 59 | X | 1 |
| 88-023 | SFS 61 | X | 1 |
| 88-025 | SFS 61 | X | 1 |
| 88-028 | SFS 61 | X | 1 |
| 88-029 | SFS 60 | X | 1 |
| 88-033 | SFS 62 | X | 1 |
| 88-034 | SFS 62 | X | 1 |
| 88-035 | SFS 60 | X | 1 |
| 88-037 | SFS 61 | X | 1 |
| 88-038 | SFS 59 | X | 1 |
| 88-039 | SFS 59 | X | 1 |
| 88-043 | SFS 60 | X | 1 |
| 88-045 | SFS 62 | X | 1 |
| 88-047 | SFS 61 | X | 1 |
| 88-048 | SFS 61 | X | 1 |
| 88-049 | SFS 60 | X | 1 |
| 88-065 | SFS 62 | X | 1 |
| 88-066 | SFS 62 | X | 1 |
| 88-100 | SFS 58 | X | 1 |
| 88-101 | SFS 58 | X | 1 |
| 88-102 | SFS 58 | X | 1 |
| 88-103 | SFS 58 | X | 1 |
| 88-104 | SFS 59 | X | 1 |
| 88-109 | SFS 58 | X | 1 |
| 88-110 | SFS 58 | X | 1 |
| 88-111 | SFS 58 | X | 1 |
| 88-112 | SFS 58 | X | 1 |
| 88-113 | SFS 58 | X | 1 |
| 88-114 | SFS 59 | X | 1 |
| 88-115 | SFS 59 | X | 1 |
| 88-116 | SFS 59 | X | 1 |
| 88-118 | SFS 59 | X | 1 |
| 88-400 | SFS 67 | X | 1 |
| 88-405 | SFS 67 | X | 1 |
| 89-001 | LG 590 | X | 1 |
| 89-801 | LG 368 | X | 10 |
| 90-109 | LG 414 | X | 10 |
| 90-142 | LG 368 | X | 6 |
| 90-143 | LG 368 | X | 10 |
| 90-144 | LG 368 | X | 6 |

| OREGON | Page | Code | Pk. |
|---|---|---|---|
| 90-145 | LG 368 | X | 6 |
| 90-146 | LG 368 | X | 6 |
| 90-205 | LG 501 | X | 10 |
| 90-206 | LG 414 | X | 6 |
| 90-207 | LG 472 | X | 6 |
| 90-208 | LG 502 | X | 6 |
| 90-309 | LG 492 | X | 10 |
| 90-348 | LG 484 | X | 6 |
| 90-354 | LG 488 | X | 6 |
| 90-618 | LG 368 | X | 10 |
| 90-619 | LG 368 | X | 10 |
| 90-620 | LG 368 | X | 6 |
| 90-621 | LG 368 | X | 6 |
| 90-622 | LG 368 | X | 6 |
| 90-643 | LG 560 | X | 10 |
| 90-644 | LG 561 | X | 10 |
| 90-651 | LG 457 | X | 6 |
| 90-656 | LG 406 | X | 10 |
| 90-669 | LG 420 | X | 6 |
| 90-685 | LG 540 | x | 6 |
| 90-697 | LG 406 | x | 6 |
| 90-698 | LG 510 | x | 10 |
| 91-003 | LG 370 | X | 6 |
| 91-005 | LG 458 | X | 10 |
| 91-034 | LG 583 | X | 6 |
| 91-035 | LG 393 | X | 6 |
| 91-036 | LG 450 | X | 5 |
| 91-039 | LG 487 | X | 6 |
| 91-046 | LG 384 | X | 6 |
| 91-047 | LG 384 | X | 5 |
| 91-050 | LG 559 | X | 6 |
| 91-051 | LG 559 | X | 10 |
| 91-056 | LG 406 | X | 10 |
| 91-057 | LG 409 | X | 6 |
| 91-058 | LG 411 | X | 6 |
| 91-071 | LG 393 | X | 10 |
| 91-073 | LG 512 | X | 6 |
| 91-078 | LG 490 | X | 6 |
| 91-079 | LG 485 | X | 10 |
| 91-080 | LG 490 | N | 6 |
| 91-087 | LG 502 | X | 6 |
| 91-093 | LG 389 | X | 10 |
| 91-096 | LG 389 | X | 10 |
| 91-097 | LG 388 | X | 6 |
| 91-117 | LG 475 | X | 6 |
| 91-123 | LG 395 | X | 6 |
| 91-126 | LG 548 | X | 10 |
| 91-127 | LG 396 | X | 10 |
| 91-128 | LG 424 | X | 6 |
| 91-129 | LG 396 | X | 6 |
| 91-135 | LG 387 | X | 6 |
| 91-138 | LG 488 | X | 6 |
| 91-141 | LG 394 | X | 6 |
| 91-142 | LG 395 | X | 5 |
| 91-144 | LG 454 | X | 6 |
| 91-146 | LG 419 | X | 6 |
| 91-167 | LG 416 | X | 6 |
| 91-170 | LG 437 | X | 10 |
| 91-178 | LG 471 | X | 10 |
| 91-180 | LG 460 | X | 6 |
| 91-181 | LG 495 | X | 6 |
| 91-183 | LG 370 | X | 6 |
| 91-184 | LG 421 | X | 6 |
| 91-188 | LG 439 | X | 6 |
| 91-207 | LG 447 | X | 10 |
| 91-209 | LG 552 | X | 6 |
| 91-217 | LG 558 | X | 10 |
| 91-218 | LG 420 | X | 6 |
| 91-235 | LG 461 | X | 10 |
| 91-239 | LG 454 | X | 6 |
| 91-242 | LG 371 | X | 10 |

| OREGON | Page | Code | Pk. |
|---|---|---|---|
| 91-244 | LG 450 | X | 10 |
| 91-253 | LG 415 | X | 6 |
| 91-254 | LG 456 | X | 5 |
| 91-255 | LG 454 | N | 6 |
| 91-256 | LG 437 | X | 6 |
| 91-259 | LG 432 | X | 6 |
| 91-264 | LG 473 | X | 6 |
| 91-265 | LG 431 | X | 6 |
| 91-266 | LG 431 | X | 10 |
| 91-291 | LG 457 | X | 6 |
| 91-308 | LG 467 | X | 6 |
| 91-311 | LG 439 | X | 10 |
| 91-312 | LG 478 | X | 6 |
| 91-313 | LG 494 | X | 10 |
| 91-327 | LG 404 | X | 6 |
| 91-329 | LG 409 | X | 10 |
| 91-330 | LG 513 | X | 6 |
| 91-332 | LG 412 | X | 10 |
| 91-333 | LG 406 | X | 10 |
| 91-335 | LG 420 | X | 10 |
| 91-342 | LG 447 | X | 6 |
| 91-352 | LG 482 | X | 6 |
| 91-363 | LG 481 | X | 10 |
| 91-364 | LG 481 | X | 10 |
| 91-368 | LG 460 | X | 10 |
| 91-369 | LG 434 | X | 6 |
| 91-373 | LG 383 | X | 10 |
| 91-374 | LG 442 | X | 6 |
| 91-378 | LG 414 | X | 6 |
| 91-380 | LG 538 | X | 6 |
| 91-381 | LG 483 | X | 6 |
| 91-383 | LG 484 | X | 6 |
| 91-384 | LG 487 | X | 6 |
| 91-389 | LG 538 | X | 6 |
| 91-391 | LG 489 | X | 6 |
| 91-393 | LG 485 | X | 6 |
| 91-394 | LG 489 | X | 6 |
| 91-395 | LG 493 | X | 5 |
| 91-398 | LG 488 | X | 6 |
| 91-399 | LG 493 | X | 5 |
| 91-400 | LG 488 | X | 6 |
| 91-401 | LG 483 | X | 6 |
| 91-403 | LG 488 | X | 10 |
| 91-404 | LG 487 | X | 10 |
| 91-414 | LG 405 | X | 10 |
| 91-415 | LG 406 | X | 10 |
| 91-417 | LG 500 | X | 10 |
| 91-430 | LG 497 | X | 10 |
| 91-433 | LG 498 | X | 6 |
| 91-435 | LG 498 | X | 10 |
| 91-436 | LG 498 | X | 6 |
| 91-438 | LG 500 | X | 6 |
| 91-440 | LG 408 | X | 6 |
| 91-442 | LG 518 | X | 10 |
| 91-443 | LG 489 | X | 10 |
| 91-444 | LG 457 | X | 6 |
| 91-446 | LG 491 | X | 6 |
| 91-447 | LG 538 | X | 6 |
| 91-448 | LG 482 | X | 6 |
| 91-449 | LG 492 | X | 10 |
| 91-452 | LG 497 | X | 6 |
| 91-453 | LG 497 | X | 6 |
| 91-456 | LG 502 | X | 6 |
| 91-457 | LG 502 | X | 6 |
| 91-482 | LG 434 | X | 10 |
| 91-489 | LG 394 | X | 6 |
| 91-493 | LG 500 | X | 6 |
| 91-496 | LG 484 | X | 6 |
| 91-500 | LG 416 | X | 6 |
| 91-501 | LG 413 | X | 6 |
| 91-502 | LG 477 | X | 10 |



N = New Item
F = NLA after inventories are sold

D = Discontinued after 2019 catalog
X = Active part number

# 2019 Numerical Index

| OREGON | Page | Code | Pk. |
|---|---|---|---|
| 91-503 | LG 424 | X | 10 |
| 91-505 | LG 477 | X | 6 |
| 91-506 | LG 473 | X | 6 |
| 91-507 | LG 415 | X | 6 |
| 91-508 | LG 419 | X | 6 |
| 91-509 | LG 424 | X | 6 |
| 91-515 | LG 415 | X | 6 |
| 91-516 | LG 457 | X | 6 |
| 91-517 | LG 457 | X | 6 |
| 91-525 | LG 477 | X | 6 |
| 91-526 | LG 416 | X | 6 |
| 91-527 | LG 479 | X | 6 |
| 91-528 | LG 415 | X | 6 |
| 91-531 | LG 393 | X | 6 |
| 91-532 | LG 448 | X | 6 |
| 91-533 | LG 394 | X | 10 |
| 91-534 | LG 578 | X | 10 |
| 91-535 | LG 448 | X | 6 |
| 91-536 | LG 395 | X | 6 |
| 91-537 | LG 578 | X | 10 |
| 91-538 | LG 577 | X | 6 |
| 91-539 | LG 393 | X | 6 |
| 91-544 | LG 397 | X | 6 |
| 91-547 | LG 449 | X | 10 |
| 91-557 | LG 545 | X | 6 |
| 91-558 | LG 448 | X | 6 |
| 91-573 | LG 559 | X | 6 |
| 91-574 | LG 559 | X | 10 |
| 91-584 | LG 578 | X | 6 |
| 91-585 | LG 493 | X | 6 |
| 91-586 | LG 485 | X | 6 |
| 91-587 | LG 490 | X | 6 |
| 91-588 | LG 493 | X | 6 |
| 91-589 | LG 482 | X | 6 |
| 91-590 | LG 492 | X | 6 |
| 91-591 | LG 481 | X | 6 |
| 91-592 | | X | 6 |
| 91-593 | LG 534 | X | 6 |
| 91-594 | LG 534 | N | 6 |
| 91-596 | LG 446 | X | 6 |
| 91-598 | LG 583 | X | 6 |
| 91-604 | LG 492 | X | 6 |
| 91-605 | LG 544 | X | 6 |
| 91-606 | LG 509 | X | 6 |
| 91-607 | LG 544 | X | 6 |
| 91-608 | LG 443 | X | 6 |
| 91-609 | LG 469 | X | 6 |
| 91-610 | LG 554 | X | 6 |
| 91-611 | LG 527 | X | 6 |
| 91-613 | LG 498 | X | 6 |
| 91-615 | LG 522 | X | 6 |
| 91-616 | LG 543 | X | 6 |
| 91-620 | LG 470 | X | 6 |
| 91-621 | LG 563 | X | 6 |
| 91-622 | LG 536 | X | 6 |
| 91-623 | LG 485 | X | 6 |
| 91-626 | LG 552 | X | 6 |
| 91-627 | LG 482 | X | 10 |
| 91-628 | LG 387 | X | 6 |
| 91-635 | LG 411 | X | 10 |
| 91-636 | LG 535 | X | 6 |
| 91-637 | LG 507 | X | 6 |
| 91-638 | LG 426 | X | 6 |
| 91-701 | LG 545 | X | 10 |
| 91-703 | LG 541 | X | 6 |
| 91-705 | LG 540 | X | 6 |
| 91-706 | LG 550 | X | 10 |
| 91-713 | LG 422 | X | 10 |
| 91-714 | LG 543 | X | 6 |
| 91-715 | LG 541 | X | 6 |
| 91-723 | LG 508 | X | 10 |

| OREGON | Page | Code | Pk. |
|---|---|---|---|
| 91-731 | LG 558 | X | 10 |
| 91-732 | LG 559 | X | 10 |
| 91-761 | LG 578 | X | 6 |
| 91-762 | LG 578 | X | 6 |
| 91-764 | LG 579 | X | 6 |
| 91-766 | LG 579 | X | 6 |
| 91-767 | LG 577 | X | 6 |
| 91-802 | LG 560 | X | 6 |
| 91-804 | LG 560 | X | 6 |
| 91-805 | LG 560 | X | 10 |
| 91-806 | LG 447 | X | 10 |
| 91-911 | LG 576 | X | 10 |
| 91-912 | LG 576 | X | 6 |
| 91-913 | LG 576 | X | 6 |
| 91-917 | LG 576 | X | 6 |
| 91-918 | LG 576 | X | 6 |
| 91-919 | LG 576 | X | 5 |
| 91-920 | LG 576 | X | 6 |
| 91-938 | LG 514 | X | 6 |
| 92-011 | LG 490 | X | 6 |
| 92-013 | LG 480 | X | 10 |
| 92-014 | LG 481 | X | 6 |
| 92-015 | LG 407 | X | 6 |
| 92-025 | LG 440 | X | 10 |
| 92-026 | LG 435 | X | 6 |
| 92-027 | LG 432 | X | 6 |
| 92-028 | LG 433 | X | 6 |
| 92-029 | LG 435 | X | 6 |
| 92-030 | LG 567 | X | 6 |
| 92-031 | LG 433 | X | 6 |
| 92-033 | LG 442 | X | 6 |
| 92-035 | LG 537 | X | 6 |
| 92-036 | LG 428 | X | 6 |
| 92-037 | LG 423 | X | 6 |
| 92-038 | LG 392 | X | 6 |
| 92-039 | LG 470 | X | 6 |
| 92-040 | LG 369 | X | 10 |
| 92-042 | LG 472 | X | 6 |
| 92-044 | LG 471 | X | 6 |
| 92-045 | LG 474 | X | 6 |
| 92-047 | LG 497 | X | 6 |
| 92-048 | LG 498 | X | 6 |
| 92-049 | LG 500 | X | 6 |
| 92-054 | LG 434 | X | 6 |
| 92-057 | LG 442 | X | 6 |
| 92-082 | LG 433 | X | 6 |
| 92-084 | LG 442 | X | 10 |
| 92-101 | LG 458 | X | 5 |
| 92-102 | LG 458 | X | 10 |
| 92-103 | LG 487 | X | 6 |
| 92-104 | LG 485 | X | 6 |
| 92-105 | LG 485 | X | 6 |
| 92-109 | LG 489 | X | 10 |
| 92-110 | LG 491 | X | 6 |
| 92-113 | LG 490 | X | 6 |
| 92-114 | LG 493 | X | 5 |
| 92-115 | LG 499 | X | 6 |
| 92-116 | LG 500 | X | 6 |
| 92-118 | LG 488 | X | 6 |
| 92-119 | LG 492 | X | 6 |
| 92-120 | LG 492 | X | 10 |
| 92-121 | LG 499 | X | 6 |
| 92-122 | LG 499 | X | 6 |
| 92-123 | LG 499 | X | 6 |
| 92-124 | LG 497 | X | 6 |
| 92-127 | LG 498 | X | 6 |
| 92-128 | LG 499 | X | 6 |
| 92-130 | LG 499 | X | 6 |
| 92-132 | LG 498 | X | 6 |
| 92-133 | LG 382 | X | 6 |
| 92-134 | LG 393 | X | 6 |

| OREGON | Page | Code | Pk. |
|---|---|---|---|
| 92-135 | LG 392 | X | 6 |
| 92-137 | LG 396 | X | 6 |
| 92-138 | LG 396 | X | 6 |
| 92-139 | LG 398 | X | 6 |
| 92-140 | LG 516 | X | 6 |
| 92-141 | LG 413 | X | 6 |
| 92-142 | LG 413 | X | 6 |
| 92-144 | LG 485 | X | 6 |
| 92-145 | LG 535 | X | 6 |
| 92-146 | LG 539 | X | 6 |
| 92-147 | LG 559 | X | 6 |
| 92-149 | LG 392 | X | 6 |
| 92-150 | LG 395 | X | 6 |
| 92-151 | LG 453 | X | 6 |
| 92-152 | LG 455 | X | 6 |
| 92-153 | LG 370 | X | 6 |
| 92-154 | LG 396 | N | 6 |
| 92-157 | LG 453 | X | 6 |
| 92-158 | LG 453 | X | 6 |
| 92-159 | LG 578 | X | 6 |
| 92-160 | LG 395 | X | 6 |
| 92-161 | LG 395 | X | 6 |
| 92-162 | LG 397 | X | 6 |
| 92-163 | LG 396 | X | 6 |
| 92-164 | LG 583 | X | 6 |
| 92-165 | LG 580 | X | 6 |
| 92-166 | LG 397 | N | 6 |
| 92-167 | LG 443 | X | 6 |
| 92-168 | LG 572 | X | 6 |
| 92-169 | LG 497 | X | 6 |
| 92-170 | LG 502 | X | 6 |
| 92-171 | LG 503 | X | 6 |
| 92-172 | LG 502 | X | 6 |
| 92-173 | LG 502 | X | 6 |
| 92-174 | LG 502 | X | 6 |
| 92-175 | LG 502 | X | 6 |
| 92-176 | LG 576 | X | 6 |
| 92-177 | LG 576 | X | 6 |
| 92-178 | LG 397 | N | 6 |
| 92-179 | LG 396 | N | 6 |
| 92-180 | LG 395 | N | 6 |
| 92-181 | LG 397 | N | 6 |
| 92-184 | LG 500 | N | 6 |
| 92-207 | LG 456 | X | 6 |
| 92-208 | LG 472 | X | 6 |
| 92-209 | LG 433 | X | 6 |
| 92-211 | LG 471 | X | 6 |
| 92-212 | LG 471 | X | 6 |
| 92-213 | LG 473 | X | 6 |
| 92-217 | LG 369 | X | 6 |
| 92-300 | LG 382 | X | 6 |
| 92-301 | LG 382 | X | 6 |
| 92-302 | LG 382 | X | 6 |
| 92-415 | LG 374 | X | 6 |
| 92-416 | LG 456 | X | 6 |
| 92-417 | LG 456 | N | 6 |
| 92-602 | LG 455 | X | 6 |
| 92-607 | LG 434 | X | 6 |
| 92-615 | LG 491 | X | 10 |
| 92-616 | LG 485 | X | 6 |
| 92-617 | LG 487 | X | 5 |
| 92-675 | LG 484 | X | 6 |
| 92-676 | LG 491 | X | 6 |
| 92-737 | LG 418 | X | 6 |
| 92-738 | LG 472 | X | 6 |
| 92-739 | LG 474 | X | 6 |
| 92-743 | LG 418 | X | 6 |
| 92-910 | LG 443 | N | 6 |
| 92-912 | LG 436 | N | 6 |
| 92-913 | LG 438 | N | 6 |
| 92-919 | LG 435 | N | 6 |

N = New Item
F = NLA after inventories are sold

D = Discontinued after 2019 catalog
X = Active part number

# 2019 Numerical Index

| OREGON | Page | Code | Pk. |
|---|---|---|---|
| **92-921** | LG 441 | N | 6 |
| **93-005** | LG 447 | X | 6 |
| **93-006** | LG 444 | X | 10 |
| **93-008** | LG 510 | X | 10 |
| **93-009** | LG 476 | X | 6 |
| **93-010** | LG 432 | X | 6 |
| **93-011** | LG 557 | X | 6 |
| **93-013** | LG 480 | X | 10 |
| **93-025** | LG 482 | X | 5 |
| **93-601** | LG 432 | X | 10 |
| **933-FL** | SFS 88 | X | 1 |
| **935-FL** | SFS 88 | X | 1 |
| **937-FL** | SFS 88 | X | 1 |
| **94-011** | LG 572 | X | 6 |
| **94-017** | LG 441 | X | 6 |
| **94-018** | LG 565 | X | 6 |
| **94-019** | LG 570 | X | 6 |
| **94-021** | LG 573 | X | 6 |
| **94-022** | LG 565 | X | 10 |
| **94-026** | LG 369 | X | 10 |
| **94-029** | LG 414 | X | 6 |
| **94-032** | LG 568 | X | 6 |
| **94-038** | LG 568 | X | 6 |
| **94-039** | LG 561 | X | 10 |
| **94-040** | LG 573 | X | 5 |
| **94-043** | LG 568 | X | 6 |
| **94-045** | LG 571 | X | 10 |
| **94-049** | LG 573 | X | 6 |
| **94-051** | LG 570 | X | 6 |
| **94-052** | LG 573 | X | 10 |
| **94-053** | LG 503 | X | 10 |
| **94-055** | LG 480 | X | 6 |
| **94-059** | LG 564 | X | 6 |
| **94-060** | LG 438 | X | 6 |
| **94-061** | LG 561 | X | 6 |
| **94-063** | LG 564 | X | 6 |
| **94-064** | LG 565 | X | 10 |
| **94-068** | LG 441 | X | 6 |
| **94-069** | LG 441 | X | 6 |
| **94-070** | LG 438 | X | 6 |
| **94-071** | LG 571 | X | 6 |
| **94-072** | LG 568 | X | 6 |
| **94-073** | LG 573 | X | 6 |
| **94-074** | LG 571 | X | 6 |
| **94-075** | LG 481 | X | 6 |
| **94-076** | LG 571 | X | 6 |
| **94-077** | LG 571 | X | 6 |
| **94-079** | LG 568 | X | 6 |
| **94-085** | LG 564 | X | 6 |
| **94-121** | LG 534 | N | 6 |
| **94-122** | LG 534 | N | 6 |
| **94-123** | LG 534 | N | 6 |
| **94-124** | LG 534 | N | 6 |
| **94-125** | LG 563 | N | 6 |
| **94-126** | LG 569 | N | 6 |
| **94-127** | LG 569 | X | 6 |
| **94-128** | LG 564 | X | 6 |
| **94-130** | LG 569 | N | 6 |
| **94-131** | LG 572 | N | 6 |
| **94-132** | LG 566 | N | 6 |
| **94-133** | LG 568 | N | 6 |
| **94-134** | LG 572 | N | 6 |
| **94-135** | LG 565 | N | 6 |
| **94-136** | LG 572 | N | 6 |
| **94-138** | LG 568 | N | 6 |
| **94-322** | LG 520 | X | 6 |
| **94-602** | LG 568 | X | 6 |
| **94-615** | LG 370 | X | 10 |
| **94-618** | LG 506 | X | 6 |
| **94-620** | LG 414 | X | 10 |
| **94-621** | LG 570 | X | 10 |

| OREGON | Page | Code | Pk. |
|---|---|---|---|
| **94-770** | LG 569 | X | 10 |
| **95-006** | LG 397 | X | 6 |
| **95-011** | | D | 10 |
| **95-014** | LG 374 | X | 6 |
| **95-015** | LG 400 | X | 6 |
| **95-018** | LG 399 | X | 10 |
| **95-023** | LG 380 | X | 6 |
| **95-024** | LG 465 | X | 6 |
| **95-026** | LG 376 | X | 6 |
| **95-027** | LG 398 | X | 10 |
| **95-031** | LG 377 | X | 6 |
| **95-034** | LG 377 | X | 6 |
| **95-036** | LG 463 | X | 10 |
| **95-038** | LG 523 | X | 6 |
| **95-041** | LG 401 | X | 6 |
| **95-042** | LG 468 | X | 6 |
| **95-044** | LG 465 | X | 6 |
| **95-045** | LG 374 | X | 10 |
| **95-047** | LG 378 | X | 6 |
| **95-049** | LG 459 | X | 6 |
| **95-050** | LG 461 | X | 10 |
| **95-051** | LG 465 | X | 6 |
| **95-052** | LG 398 | X | 6 |
| **95-057** | LG 380 | X | 6 |
| **95-058** | LG 458 | X | 10 |
| **95-068** | LG 376 | X | 6 |
| **95-071** | LG 402 | X | 6 |
| **95-073** | LG 533 | X | 6 |
| **95-074** | LG 533 | X | 6 |
| **95-076** | LG 404 | X | 6 |
| **95-077** | LG 461 | X | 6 |
| **95-078** | LG 496 | X | 6 |
| **95-080** | | X | 6 |
| **95-082** | LG 372 | X | 6 |
| **95-084** | LG 494 | X | 6 |
| **95-085** | LG 462 | X | 6 |
| **95-086** | LG 425 | X | 6 |
| **95-087** | LG 460 | X | 6 |
| **95-088** | LG 458 | X | 6 |
| **95-092** | LG 423 | X | 6 |
| **95-095** | LG 463 | N | 6 |
| **95-099** | LG 400 | X | 10 |
| **95-370** | LG 373 | X | 6 |
| **95-601** | LG 423 | X | 10 |
| **95-602** | LG 403 | X | 10 |
| **95-605** | LG 463 | X | 6 |
| **95-607** | LG 397 | X | 6 |
| **95-609** | LG 376 | X | 10 |
| **95-613** | LG 463 | X | 6 |
| **95-614** | LG 375 | X | 10 |
| **95-615** | LG 426 | X | 10 |
| **95-621** | LG 402 | X | 10 |
| **95-623** | LG 466 | N | 6 |
| **96-005** | | D | 10 |
| **96-040** | LG 369 | X | 6 |
| **96-041** | LG 372 | X | 6 |
| **96-047** | LG 497 | X | 6 |
| **96-075** | LG 571 | X | 6 |
| **96-129** | LG 396 | X | 6 |
| **96-133** | LG 422 | X | 6 |
| **96-215** | LG 475 | X | 6 |
| **96-216** | LG 475 | X | 6 |
| **96-300** | LG 519 | X | 10 |
| **96-302** | LG 470 | X | 6 |
| **96-303** | LG 416 | X | 10 |
| **96-306** | LG 538 | X | 6 |
| **96-308** | LG 456 | X | 6 |
| **96-309** | LG 488 | X | 10 |
| **96-310** | LG 444 | X | 6 |
| **96-318** | LG 414 | X | 6 |
| **96-319** | LG 415 | X | 6 |

| OREGON | Page | Code | Pk. |
|---|---|---|---|
| **96-321** | LG 436 | X | 6 |
| **96-322** | LG 567 | X | 10 |
| **96-323** | LG 477 | X | 6 |
| **96-324** | LG 431 | X | 6 |
| **96-327** | LG 417 | X | 10 |
| **96-328** | LG 431 | X | 6 |
| **96-329** | LG 449 | X | 6 |
| **96-332** | LG 484 | X | 6 |
| **96-333** | LG 408 | X | 6 |
| **96-340** | LG 539 | X | 6 |
| **96-341** | LG 446 | X | 6 |
| **96-343** | LG 395 | X | 6 |
| **96-344** | LG 536 | X | 6 |
| **96-346** | LG 449 | X | 6 |
| **96-347** | LG 387 | X | 6 |
| **96-349** | LG 458 | X | 10 |
| **96-350** | LG 412 | X | 10 |
| **96-351** | LG 408 | X | 10 |
| **96-354** | LG 484 | X | 10 |
| **96-362** | LG 570 | X | 10 |
| **96-363** | LG 499 | X | 6 |
| **96-364** | LG 488 | X | 6 |
| **96-370** | LG 533 | X | 6 |
| **96-372** | LG 500 | X | 5 |
| **96-374** | LG 560 | X | 6 |
| **96-381** | LG 406 | X | 6 |
| **96-382** | LG 564 | X | 10 |
| **96-387** | LG 515 | X | 6 |
| **96-394** | LG 538 | X | 10 |
| **96-395** | LG 565 | X | 10 |
| **96-398** | LG 525 | X | 6 |
| **96-401** | LG 404 | X | 6 |
| **96-415** | LG 456 | X | 6 |
| **96-600** | LG 569 | X | 10 |
| **96-602** | LG 572 | X | 6 |
| **96-603** | LG 394 | X | 10 |
| **96-605** | LG 394 | X | 6 |
| **96-607** | LG 571 | X | 10 |
| **96-612** | LG 499 | X | 6 |
| **96-615** | LG 461 | X | 6 |
| **96-618** | LG 483 | X | 6 |
| **96-620** | LG 551 | X | 10 |
| **96-624** | LG 447 | X | 6 |
| **96-628** | LG 528 | X | 6 |
| **96-630** | LG 556 | X | 6 |
| **96-631** | LG 428 | X | 10 |
| **96-632** | LG 559 | X | 6 |
| **96-633** | LG 556 | X | 10 |
| **96-654** | LG 511 | X | 6 |
| **96-660** | LG 441 | X | 6 |
| **96-661** | LG 535 | X | 6 |
| **96-677** | LG 372 | X | 6 |
| **96-696** | LG 481 | X | 5 |
| **96-697** | LG 517 | X | 6 |
| **96-699** | LG 442 | X | 6 |
| **96-701** | LG 568 | X | 6 |
| **96-702** | LG 491 | X | 6 |
| **96-705** | LG 573 | X | 6 |
| **96-708** | LG 571 | X | 10 |
| **96-724** | LG 430 | X | 6 |
| **96-741** | LG 573 | X | 5 |
| **96-748** | LG 499 | X | 6 |
| **96-749** | LG 433 | X | 6 |
| **96-778** | LG 394 | X | 6 |
| **96-787** | LG 500 | X | 6 |
| **96-795** | LG 481 | X | 6 |
| **96-801** | LG 479 | X | 6 |
| **96-802** | LG 568 | X | 6 |
| **96-803** | LG 567 | X | 6 |
| **96-808** | LG 450 | X | 6 |
| **96-809** | LG 505 | X | 6 |



N = New Item
F = NLA after inventories are sold

D = Discontinued after 2019 catalog
X = Active part number

| OREGON | Page | Code | Pk. |
|---|---|---|---|
| 96-810 | LG 439 | X | 6 |
| 96-811 | LG 489 | X | 6 |
| 96-900 | LG 526 | X | 6 |
| 97-001 | LG 527 | X | 6 |
| 97-003 | | D | 10 |
| 97-004 | | D | 10 |
| 97-005 | LG 527 | X | 10 |
| 97-006 | LG 525 | X | 10 |
| 97-008 | LG 526 | X | 10 |
| 97-010 | LG 524 | X | 6 |
| 97-012 | LG 537 | X | 6 |
| 97-013 | LG 526 | X | 10 |
| 97-014 | LG 527 | X | 6 |
| 97-015 | LG 527 | X | 6 |
| 97-016 | LG 524 | X | 6 |
| 97-017 | LG 537 | X | 10 |
| 97-018 | LG 523 | X | 6 |
| 97-020 | LG 526 | X | 10 |
| 97-021 | LG 524 | X | 10 |
| 97-022 | LG 524 | X | 10 |
| 97-024 | LG 525 | X | 6 |
| 97-105 | LG 523 | X | 6 |
| 97-107 | LG 524 | X | 6 |
| 97-109 | LG 525 | X | 10 |
| 97-110 | LG 525 | X | 10 |
| 97-118 | LG 524 | X | 10 |
| 97-119 | LG 525 | X | 6 |
| 97-123 | LG 537 | X | 10 |
| 97-330 | LG 528 | X | 6 |
| 97-601 | LG 527 | X | 10 |
| 97-604 | LG 525 | X | 10 |
| 97-606 | LG 522 | X | 10 |
| 98-001 | LG 517 | X | 10 |
| 98-002 | LG 401 | X | 10 |
| 98-005 | LG 521 | X | 10 |
| 98-007 | LG 401 | X | 6 |
| 98-019 | LG 516 | X | 6 |
| 98-037 | LG 574 | X | 10 |
| 98-044 | LG 409 | X | 6 |
| 98-050 | LG 521 | X | 6 |
| 98-051 | LG 521 | X | 6 |
| 98-054 | LG 574 | X | 10 |
| 98-056 | LG 512 | X | 6 |
| 98-057 | LG 513 | X | 6 |
| 98-061 | LG 404 | X | 6 |
| 98-064-1 | LG 514 | X | 6 |
| 98-065 | LG 515 | X | 6 |
| 98-066 | LG 409 | X | 6 |
| 98-067 | LG 520 | N | 6 |
| 98-068 | LG 389 | X | 6 |
| 98-069 | LG 404 | X | 6 |
| 98-071 | LG 411 | X | 6 |
| 98-072 | LG 408 | X | 6 |
| 98-080 | LG 512 | X | 6 |
| 98-081 | LG 406 | X | 10 |
| 98-082 | LG 513 | X | 10 |
| 98-083 | LG 404 | X | 10 |
| 98-084 | LG 512 | X | 10 |
| 98-085 | LG 561 | X | 6 |
| 98-087 | LG 407 | X | 6 |
| 98-088 | LG 519 | X | 6 |
| 98-090 | LG 519 | X | 10 |
| 98-091 | LG 516 | X | 6 |
| 98-093 | LG 411 | X | 6 |
| 98-094 | LG 514 | X | 6 |
| 98-095 | LG 521 | N | 6 |
| 98-096 | LG 404 | X | 10 |
| 98-097 | LG 514 | X | 6 |
| 98-098 | LG 410 | X | 6 |
| 98-099 | LG 412 | N | 6 |
| 98-102 | LG 410 | X | 6 |

| OREGON | Page | Code | Pk. |
|---|---|---|---|
| 98-151 | LG 516 | N | 6 |
| 98-152 | LG 514 | N | 6 |
| 98-486 | LG 512 | X | 10 |
| 98-487 | LG 513 | X | 6 |
| 98-493 | LG 409 | X | 6 |
| 98-496 | LG 515 | X | 10 |
| 98-499 | LG 519 | X | 6 |
| 98-537 | LG 516 | X | 10 |
| 98-600 | LG 85 | D | 6 |
| 98-628 | LG 389 | X | 10 |
| 98-629 | LG 412 | X | 6 |
| 98-631 | LG 390 | X | 6 |
| 98-634 | LG 405 | X | 10 |
| 98-637 | LG 512 | X | 10 |
| 98-640 | LG 574 | X | 10 |
| 98-670 | LG 512 | X | 10 |
| 98-671 | LG 514 | X | 10 |
| 98-672 | LG 408 | X | 6 |
| 99-103 | LG 551 | X | 6 |
| 99-107 | LG 551 | X | 10 |
| 99-112 | LG 556 | X | 10 |
| 99-113 | LG 528 | X | 10 |
| 99-114 | LG 555 | X | 10 |
| 99-117 | LG 556 | X | 6 |
| 99-119 | LG 489 | X | 6 |
| 99-121 | LG 551 | X | 6 |
| 99-126 | LG 501 | X | 10 |
| 99-127 | LG 375 | X | 10 |
| 99-131 | LG 555 | X | 6 |
| 99-132 | LG 539 | X | 6 |
| 99-133 | LG 542 | X | 10 |
| 99-134 | LG 527 | X | 6 |
| 99-500 | LG 535 | X | 6 |
| 99-501 | LG 536 | X | 6 |
| 99-502 | LG 536 | X | 6 |
| 99-614 | LG 551 | X | 10 |
| 99-615 | LG 552 | X | 10 |
| 99-617 | LG 395 | X | 6 |
| AR64511 | SFS 98 | X | 1 |
| F-15 | SFS 87 | X | 1 |
| F00-230 | SFS 22 | X | 1 |
| F00-231 | SFS 22 | X | 1 |
| F00-232 | SFS 22 | X | 1 |
| F00-283 | SFS 5 | X | 1 |
| F00-283-A | SFS 5 | X | 1 |
| F00-284 | SFS 5 | X | 1 |
| F110054 | SFS 93 | X | 12 |
| F110078 | SFS 93 | X | 12 |
| F24200 | SFS 96 | X | 1 |
| F25219 | SFS 91 | X | 1 |
| F27100 | SFS 96 | X | 12 |
| F29208 | SFS 95 | X | 1 |
| F50002 | SFS 97 | X | 10 |
| F50004 | SFS 97 | X | 8 |
| F51020 | SFS 97 | X | 1 |
| F51050 | SFS 97 | X | 1 |
| F80022 | SFS 95 | X | 1 |
| F80050 | SFS 96 | X | 1 |
| F81158 | SFS 95 | X | 1 |
| F81160 | SFS 96 | X | 1 |
| F82180 | SFS 95 | X | 1 |
| F8265 | SFS 97 | X | 6 |
| F8276 | SFS 97 | X | 6 |
| FD-25 | SFS 88 | X | 1 |
| OEP-FOR-1 | SFS 23 | X | 1 |
| OILDRI | SFS 68 | X | 1 |
| PI-47 | SFS 90 | X | 1 |
| PSTFLL | SFS 93 | X | 12 |
| PSTFLS | SFS 94 | X | 12 |
| SB1G | SFS 98 | X | 2 |
| SF16 | SFS 81 | X | 24 |

| OREGON | Page | Code | Pk. |
|---|---|---|---|
| SL07 | SFS 98 | X | 6 |
| SL09 | SFS 98 | X | 6 |
| SL11 | SFS 98 | X | 6 |
| SPS8715 | | X | 1 |
| U2-11-S | SFS 88 | X | 1 |
| U2-26-S | SFS 88 | X | 1 |
| U2-51-S | SFS 88 | X | 1 |
| UI-10-FS | SFS 86 | X | 1 |
| UI-10-FSB | SFS 86 | X | 1 |
| UI-10-FSY | SFS 86 | X | 1 |
| UI-20-FS | SFS 86 | X | 1 |
| UI-20-FSB | SFS 86 | X | 1 |
| UI-20-FSG | SFS 86 | X | 1 |
| UI-20-FSY | SFS 86 | X | 1 |
| UI-25-FS | SFS 87 | X | 1 |
| UI-25-FSB | | X | 1 |
| UI-25-FSG | SFS 87 | X | 1 |
| UI-25-FSY | SFS 87 | X | 1 |
| UI-4-FS | SFS 86 | X | 1 |
| UI-50-FS | SFS 87 | X | 1 |
| UI-50-FSB | SFS 87 | X | 1 |
| UI-50-FSG | SFS 87 | X | 1 |
| UI-50-FSY | SFS 87 | X | 1 |
| VP2805 | SFS 85 | X | 9 |
| VP2807 | | X | 1 |
| VP2815 | SFS 85 | X | 9 |
| VP2817 | | X | 1 |
| VP2825 | SFS 85 | X | 9 |
| VP2827 | | X | 1 |
| VP2835 | SFS 85 | X | 6 |
| VP2837 | | X | 1 |
| VP2855 | SFS 85 | X | 8 |
| VP2857 | | X | 1 |
| VP2865 | SFS 85 | X | 8 |
| VP2867 | | X | 1 |
| VP2901 | SFS 83 | X | 48 |
| VP2902 | | X | 1 |
| VP2903 | SFS 83 | X | 24 |
| VP2904 | | X | 1 |
| VP2905 | SFS 83 | X | 12 |
| VP2906 | | X | 1 |
| VP2911 | SFS 83 | X | 12 |
| VP2912 | | X | 1 |
| VP2913 | SFS 83 | X | 12 |
| VP2914 | | X | 1 |
| VP2921 | SFS 83 | X | 12 |
| VP2922 | | X | 1 |
| VP2931 | SFS 84 | X | 12 |
| VP2932 | | X | 1 |
| VP2933 | SFS 84 | X | 4 |
| VP2934 | | X | 1 |
| VP2941 | SFS 84 | X | 2 |
| VP2942 | | X | 1 |
| VP3051 | SFS 81 | X | 1 |
| VP348 | SFS 81 | X | 1 |
| VP3698 | | X | 1 |
| VP3756 | | X | 1 |
| VP6201 | SFS 79 | X | 6 |
| VP6202 | SFS 79 | X | 1 |
| VP6204 | SFS 79 | X | 1 |
| VP6205 | SFS 79 | X | 8 |
| VP6206 | SFS 79 | X | 1 |
| VP6208 | SFS 79 | X | 1 |
| VP6231 | SFS 79 | X | 6 |
| VP6232 | SFS 79 | X | 1 |
| VP6234 | SFS 79 | X | 1 |
| VP6235 | SFS 79 | X | 8 |
| VP6236 | SFS 79 | X | 1 |
| VP6238 | SFS 79 | X | 1 |
| VP6291 | SFS 80 | X | 6 |
| VP6292 | SFS 80 | X | 1 |

N = New Item
F = NLA after inventories are sold

D = Discontinued after 2019 catalog
X = Active part number

# 2019 Numerical Index

| OREGON | Page | Code | Pk. |
|---|---|---|---|
| **VP6294** | SFS 80 | X | 1 |
| **VP6295** | SFS 80 | X | 8 |
| **VP6296** | SFS 80 | X | 1 |
| **VP6298** | SFS 80 | X | 1 |
| **VP6632** | SFS 81 | X | 1 |
| **VP6635** | SFS 81 | X | 8 |
| **VP6638** | SFS 81 | X | 1 |
| **VP68111** | SFS 80 | X | 6 |
| **VP6812** | SFS 80 | X | 1 |
| **VP6814** | SFS 80 | X | 1 |
| **VP6815** | SFS 80 | X | 8 |
| **VP6816** | | X | 1 |
| **VP6818** | SFS 80 | X | 1 |
| **VP6832** | SFS 81 | X | 1 |
| **VP6834** | SFS 81 | X | 1 |
| **VP6835** | SFS 81 | X | 8 |
| **VP6838** | SFS 81 | X | 1 |
| **VP9437** | | X | 1 |
| **VPM10011** | SFS 85 | X | 4 |

| OREGON | Page | Code | Pk. |
|---|---|---|---|

| OREGON | Page | Code | Pk. |
|---|---|---|---|



N = New Item
F = NLA after inventories are sold

D = Discontinued after 2019 catalog
X = Active part number

120v Professional Series™, accessoires multiples sans fil . . . . . OPE 27–29
120v Professional Series™, batteries . . . . . OPE 36
120v Professional Series™, câble d'outils pour long manche . . . . . OPE 36
120v Professional Series™, chargeur C1600 . . . . . OPE 36
120v Professional Series™, coupe-bordure ST120VX . . . . . OPE 33
120v Professional Series™, outils et accessoires . . . . . OPE 30–37
120v Professional Series™, présentoir de point de vente . . . . . OPE 37
120v Professional Series™, sacs à dos de batteries. . . . . OPE 36
120v Professional Series™, souffleur dorsal BL120VX . . . . . OPE 32
120v Professional Series™, taille-bordures EG120VX . . . . . OPE 35
120v Professional Series™, taille-haie BHT120VX . . . . . OPE 34

## A

Accessoires d'accélérateur de cyclomoteur . . . . . LG 722
Accessoires d'accélérateur, assortiment. . . . . SFS 101
Accessoires multiples sans fil, coupe-bordure ST600 . . . . . OPE 13
Accessoires multiples sans fil, rallonge EX600 . . . . . OPE 12
Accessoires multiples sans fil, scie à long manche PS600 . . . . . OPE 12
Accessoires multiples sans fil, taille-bordures EG600 . . . . . OPE 13
Accessoires multiples sans fil, taille-haie HT600 . . . . . OPE 13
Accessoires multiples sans fil, tête motorisée PH600 . . . . . OPE 12
Accessoires, affûteuses de chaîne coupante . . . . . SFS 40–41
Accessoires, meuleuses de lame de tondeuse à gazon . . . . . SFS 62
Adaptateur de volant, AYP . . . . . LG 939–940
Adaptateur de volant, Husqvarna . . . . . LG 939–940
Adaptateurs de lame, AYP . . . . . LG 340
Adaptateurs de lame, Bobcat . . . . . LG 340
Adaptateurs de lame, Husqvarna . . . . . LG 340
Adaptateurs de lame, MTD. . . . . LG 340–341
Adaptateurs de lame, Murray . . . . . LG 342
Adaptateurs de lame, Sears . . . . . LG 342
Adaptateurs de lame, Snapper . . . . . LG 342
Adaptateurs de lame, Walker . . . . . LG 342
**ADAPTATEURS DE LAMES . . . . . LG 340–342**
Adhésif frein-filet, Permatex . . . . . SFS 96
Aérosol, nettoyant pour freins. . . . . SFS 94
Aérosol, nettoyant, de borne de batterie . . . . . SFS 95
Aérosol, protecteur de borne de batterie. . . . . SFS 95
Affûteuse de chaîne coupante Electric Sure Sharp® 12 V . . . . . SFS 11
Affûteuses à chaîne de scies à chaîne . . . . . SFS 26–31
Affûteuses, de chaîne coupante. . . . . SFS 32–40
Affûteuses, de lames de tondeuses. . . . . SFS 58–63
Affûteuses, de lames de tondeuses à gazon . . . . . SFS 58–63
Agrafes de type E, assortiment . . . . . SFS 100
Agrafes de type R. . . . . LG 795
Allis Chalmers, applications de pignon . . . . . FOR 187
Allis-Chalmers, lames . . . . . LG 369
Alpina, applications de pignon. . . . . FOR 187
AMF, arbres . . . . . LG 869
AMF, bagues. . . . . LG 243
AMF, courroies . . . . . LG 259
AMF, poulies de tension . . . . . LG 824
AMF, roues . . . . . LG 1029–1046
AMF, roues/roulettes anti-bascule . . . . . LG 1037–1042
AMF, roulements . . . . . LG 243
Amorceurs . . . . . LG 629–632
Ampoules d'amorce Walbro . . . . . LG 631–632
Anneaux de retenue, assortiment. . . . . SFS 103
Applications de guide et chaîne, Chicago Electric . . . . . FOR 22
Applications de guide et chaîne, Corona Clipper. . . . . FOR 23
**APPLICATIONS DU GUIDE-CHAÎNE ET DE LA CHAÎNE. . . . FOR 21–97**
Arbre de direction . . . . . LG 940
Arbre de direction, AYP. . . . . LG 940
Arbre de direction, Husqvarna. . . . . LG 940
Arbre de direction, MTD . . . . . LG 940
Arbre, de direction . . . . . LG 940
Arbres à broche. . . . . LG 906–910
Arbres creux, lame . . . . . LG 869–910
Arbres de torsion creux . . . . . LG 906–910
Arbres, à broche . . . . . LG 906–910
Arbres, AMF. . . . . LG 869
Arbres, Ariens . . . . . LG 869
Arbres, AYP . . . . . LG 870–876
Arbres, Bobcat . . . . . LG 874–875
Arbres, Bunton . . . . . LG 874–875
Arbres, Bush Hog . . . . . LG 876–877
Arbres, Caroni . . . . . LG 877
Arbres, creux de torsion . . . . . LG 906–910
Arbres, Cub Cadet . . . . . LG 878–883
Arbres, Dixie Chopper . . . . . LG 883
Arbres, Dixon . . . . . LG 883–884
Arbres, Excel . . . . . LG 884
Arbres, Exmark . . . . . LG 884–889
Arbres, Ferris . . . . . LG 889
Arbres, Gilson. . . . . LG 891
Arbres, Grasshopper . . . . . LG 890
Arbres, Gravely . . . . . LG 890–891
Arbres, Great Dane . . . . . LG 891
Arbres, Husqvarna . . . . . LG 870–876
Arbres, Hustler . . . . . LG 884
Arbres, John Deere . . . . . LG 891–893
Arbres, Lame . . . . . LG 869–910
Arbres, Lawn Chief . . . . . LG 869
Arbres, MTD. . . . . LG 893–901
Arbres, Murray . . . . . LG 902
Arbres, Noma . . . . . LG 869
Arbres, Roper . . . . . LG 903–904
Arbres, Scag . . . . . LG 903
Arbres, Sears . . . . . LG 903–904
Arbres, Toro . . . . . LG 905
Arbres, Wright Stander. . . . . LG 905
Ardillons de carburant . . . . . LG 765
Ariens, arbres. . . . . LG 869
Ariens, bagues . . . . . LG 225–227
Ariens, barres de raclage pour souffleuse à neige . . . . . LG 847
Ariens, courroies . . . . . LG 264–266
Ariens, embrayages PDF électrique . . . . . LG 733–741
Ariens, filtres à air . . . . . LG 179
Ariens, interrupteur d'allumage. . . . . LG 942–945
Ariens, interrupteurs de prise de force . . . . . LG 946–947
Ariens, interrupteurs de sécurité . . . . . LG 947–948
Ariens, lames . . . . . LG 369–374
Ariens, lames de coupe-bordures universelles . . . . . LG 584
Ariens, manchons pour souffleuse à neige . . . . . LG 853–854
Ariens, patins pour souffleuse à neige . . . . . LG 850
Ariens, patins pour souffleuse à neige . . . . . LG 850
Ariens, roues anti-crevaison semi-pneumatiques . . . . . LG 1044–1046
Ariens, roulements à billes . . . . . LG 225–227
Ariens, roulements pour souffleuse à neige . . . . . LG 853–854
Ariens, vis de cisaillement pour souffleuse à neige . . . . . LG 852–853
Armoires de rangement de liquides inflammables . . . . . SFS 89–90
Armoires de reangement, liquides inflammables . . . . . SFS 89–90
Articles de lunetterie de sécurité . . . . . SFS 117–119
Articles de lunetterie de sécurité, présentoir . . . . . SFS 20
Articulations de direction . . . . . LG 939
Assortiment d'esses . . . . . LG 794
Assortiment d'esses . . . . . LG 794
Assortiment, accessoires de commande de puissance . . . . . SFS 101
Assortiment, agrafes de type E . . . . . SFS 100
Assortiment, bagues élastiques . . . . . SFS 103
Assortiment, boulons à épaulement . . . . . SFS 104–105
Assortiment, colliers de serrage de tuyau . . . . . SFS 104
Assortiment, épingles . . . . . SFS 100
Assortiment, esses. . . . . SFS 104
Assortiment, filtres à essence pour intérieur du réservoir . . . . . SFS 103
Assortiment, goupilles cylindriques . . . . . SFS 102
Assortiment, goupilles de dent de gouvernail . . . . . SFS 102
Assortiment, goupilles fendues . . . . . SFS 100
Assortiment, goupilles-ressorts . . . . . SFS 102
Assortiment, graisseurs . . . . . SFS 101
Assortiment, joints d'étanchéité, admission moteurs à 2 temps. . . . . SFS 103
Assortiment, joints toriques. . . . . SFS 102
Assortiment, raccords et connecteurs électriques . . . . . SFS 100
Assortiment, ressorts d'extension . . . . . SFS 104
Assortiment, ressorts de torsion . . . . . SFS 104
Assortiment, vis à tête hexagonale et écrous métriques . . . . . SFS 101
Assortiment, vis de jeu de douilles . . . . . SFS 101
Assortiments . . . . . SFS 100–104
Attaches auto-bloquantes en plastique . . . . . LG 723
Attaches de câble. . . . . LG 742
Axes à épaulement, emballage de présentation. . . . . LG 799
AYP, adaptateur de volant de direction . . . . . LG 939
AYP, adaptateurs de lame . . . . . LG 340
AYP, arbre de direction . . . . . LG 940
AYP, arbres . . . . . LG 870–876
AYP, articulations de direction. . . . . LG 939
AYP, bague de direction . . . . . LG 939–940
AYP, bagues . . . . . LG 227–228
AYP, câbles de commande . . . . . LG 701–703
AYP, courroies. . . . . LG 259–264
AYP, embrayages PDF électriques . . . . . LG 733–741

# 2019 Index Alphabétique – FR


AYP, interrupteurs d'allumage . . . . . LG 942–945
AYP, interrupteurs de prise de force . . . . . LG 946–947
AYP, interrupteurs de sécurité . . . . . LG 947–948
AYP, lames . . . . . LG 374–382
AYP, patins de souffleuse à neige . . . . . LG 850
AYP, pièces de suspension de tondeuse . . . . . LG 804
AYP, poulies d'entraînement . . . . . LG 834
AYP, poulies de tension . . . . . LG 824–825
AYP, roues . . . . . LG 1029–1046
AYP, roues/roulettes anti-bascule . . . . . LG 1037–1042
AYP, roulements à billes . . . . . LG 227–228
AYP, sangles de verrouillage de capot de tondeuse . . . . . LG 803
AYP, secteur denté de direction . . . . . LG 939–940
AYP, support d'arbre de direction . . . . . LG 939
AYP, tiges d'entraînement . . . . . LG 939


## B


Bac de récupération à huile . . . . . SFS 67
Bac de récupération, huile . . . . . SFS 67
Bad Boy, courroies . . . . . LG 266–267
Bague de réservoir à essence . . . . . LG 767
Bague, compresseur . . . . . SFS 66
Bague, machines . . . . . SFS 106
Bagues - Exmark . . . . . LG 233-234
Bagues de machines . . . . . SFS 106
Bagues de piston, Briggs & Stratton . . . . . LG 750
Bagues de piston, compresseur . . . . . SFS 66
Bagues de piston, Honda . . . . . LG 754
Bagues de type E, emballage de présentation . . . . . LG 799
Bagues par type, tableau . . . . . LG 249
Bagues, AMF . . . . . LG 243
Bagues, Ariens . . . . . LG 225–227
Bagues, AYP . . . . . LG 227–228
Bagues, Bobcat . . . . . LG 228–230
Bagues, Briggs & Stratton . . . . . LG 750
Bagues, Bunton . . . . . LG 230
Bagues, Cub Cadet . . . . . LG 231-232
Bagues, EHP . . . . . LG 227–228
Bagues, Encore . . . . . LG 232
Bagues, Gravely . . . . . LG 235
Bagues, Honda . . . . . LG 754
Bagues, John Deere . . . . . LG 237–238
Bagues, K&S . . . . . LG 238
Bagues, MTD . . . . . LG 239–242
Bagues, Murray . . . . . LG 242–243
Bagues, Noma . . . . . LG 243
Bagues, Roper . . . . . LG 227–228
Bagues, sauterelle . . . . . LG 234–235
Bagues, Scag . . . . . LG 244
Bagues, Sears . . . . . LG 227–228
Bagues, Simplicity . . . . . LG 244–245
Bagues, Snapper . . . . . LG 245–246
Balais, démarreurs électriques . . . . . LG 927
Balancer, lame de tondeuses . . . . . SFS 63
Bande de frein, Scag . . . . . LG 698
Bande de frein, Snapper . . . . . LG 698
Barres d'attelage . . . . . LG 793
Barres de raclage, souffleuses à neige . . . . . LG 847–849
Batterie B425E . . . . . OPE 10
Batterie B600E . . . . . OPE 10
Batterie B650E . . . . . OPE 10
Batterie, blocs . . . . . OPE 10
Batterie, câbles . . . . . LG 744
Batterie, chargeur . . . . . LG 743
Batterie, chargeurs . . . . . OPE 10
Batterie, conducteur de borne . . . . . LG 743
Batterie, couvre-bornes . . . . . LG 743
Batterie, densimètre . . . . . LG 744
Batterie, extrémité de câble . . . . . LG 744
Batterie, isolateur de borne . . . . . LG 743
Batterie, pulvérisateur de nettoyant pour bornes . . . . . SFS 95
Batterie, pulvérisateur de protecteur pour bornes . . . . . SFS 95
Batterie, Tender . . . . . LG 743
Batterie, tenon de câble . . . . . LG 743
Batteries . . . . . LG 744
Batteries de remplacement . . . . . OPE 10
Batteries lithium-ion . . . . . OPE 10
Batteries, 120v Professional Series™ . . . . . OPE 36
Befco, lames . . . . . LG 382
Better Outdoors, lames . . . . . LG 383
Bidon à carburant pour le Canada seulement . . . . . SFS 90–91
Bidons à carburant . . . . . SFS 86–88
Bidons à carburant, Canada uniquement . . . . . SFS 90–91
Bidons de sécurité de déchets d'huile, polyéthylène . . . . . SFS 88
Bidons de sécurité, déchets huileux, polyéthylène . . . . . SFS 88
Bidons, carburant . . . . . SFS 86–88
Bielles, Briggs & Stratton . . . . . LG 750
Bielles, Honda . . . . . LG 755
Big Bee, lames . . . . . LG 384
Black & Decker, applications de guide et chaîne . . . . . FOR 22
Black & Decker, lames de coupe-bordures . . . . . LG 584
Bobcat, adaptateurs de lame . . . . . LG 340
Bobcat, arbres . . . . . LG 874–875
Bobcat, bagues . . . . . LG 228–230
Bobcat, câbles de commande . . . . . LG 703
Bobcat, courroies . . . . . LG 267–269
Bobcat, embrayages PDF électriques . . . . . LG 733–741
Bobcat, filtres de conduite de carburant . . . . . LG 774–776
Bobcat, interrupteurs de prise de force . . . . . LG 946–947
Bobcat, interrupteurs de sécurité . . . . . LG 947–948
Bobcat, joints à rotule . . . . . LG 938–939
Bobcat, lames . . . . . LG 384–388
Bobcat, poulies d'entraînement . . . . . LG 835
Bobcat, poulies de tension . . . . . LG 825–826
Bobcat, roues . . . . . LG 1029–1046
Bobcat, roues pneumatiques . . . . . LG 1044–1046
Bobcat, roues semi-pneumatiques anti-crevaison . . . . . LG 1044–1046
Bobcat, roues/roulettes anti-bascule . . . . . LG 1037–1042
Bobcat, roulements . . . . . LG 228–230
Bobines d'allumage . . . . . LG 784–787
Bobines d'allumage - Briggs & Stratton . . . . . LG 784–787
Bobines d'allumage, Honda . . . . . LG 784–787
Bobines d'allumage, Husqvarna . . . . . LG 784–787
Bobines d'allumage, Kohler . . . . . LG 784–787
Bobines d'allumage, Lawn Boy . . . . . LG 784–787
Bobines d'allumage, Robin . . . . . LG 784–787
Bobines d'allumage, Stihl . . . . . LG 784–787
Bobines d'allumage, Tecumseh . . . . . LG 784–787
Bobines de magnéto . . . . . LG 784–787
Bobines, allumage . . . . . LG 784–787
Bobines, magnéto . . . . . LG 784–787
Boîtes, bac de pièces . . . . . SFS 21
Boîtes, lames de tondeuse . . . . . SFS 21
Bolens, lames . . . . . LG 388–390
Bolens, roues/roulettes anti-bascule . . . . . LG 1037–1042
Bons d'entretien . . . . . SFS 21
Bons, entretien . . . . . SFS 21
Borne de batterie au plomb . . . . . LG 743
Bornes de bougie d'allumage . . . . . LG 787–788
Bornes électriques et connecteurs, assortiment . . . . . SFS 100
Bottes de foresterie en caoutchouc . . . . . SFS 113
Bottes en cuir de qualité supérieure . . . . . SFS 113
Bottes en cuir, qualité supérieure . . . . . SFS 113
Bottes, caoutchouc forestier . . . . . SFS 113
Bottes, cuir de qualité supérieure . . . . . SFS 113
Bouchon de remplissage d'huile, Briggs & Stratton . . . . . LG 750
Bouchon de remplissage d'huile, Honda . . . . . LG 756
Bouchons d'huile, scies à chaîne . . . . . LG 690
Bouchons de réservoir de carburant . . . . . LG 770–773
Bouchons de réservoir de carburant, Briggs & Stratton . . . . . LG 770
Bouchons de réservoir de carburant, Echo . . . . . LG 770–771
Bouchons de réservoir de carburant, Exmark . . . . . LG 771
Bouchons de réservoir de carburant, Homelite . . . . . LG 771
Bouchons de réservoir de carburant, Honda . . . . . LG 771
Bouchons de réservoir de carburant, Kawasaki . . . . . LG 772
Bouchons de réservoir de carburant, Maruyama . . . . . LG 772
Bouchons de réservoir de carburant, MTD . . . . . LG 772
Bouchons de réservoir de carburant, Scag . . . . . LG 772
Bouchons de réservoir de carburant, scies à chaîne . . . . . LG 690
Bouchons de réservoir de carburant, Shindaiwa . . . . . LG 772
Bouchons de réservoir de carburant, Stihl . . . . . LG 773
Bouchons de réservoir de carburant, Tanaka . . . . . LG 773
Bouchons de réservoir de carburant, Toro . . . . . LG 773
**BOUGIE D'ALLUMAGE . . . . . LG 864–867**
Boulons à épaulement, assortiment . . . . . SFS 104–105
Boulons autotaraudeurs . . . . . SFS 105
Boulons de lames . . . . . SFS 105
Boulons de moyeu . . . . . LG 910
Boulons de poignée . . . . . SFS 105
Boulons hexagonaux métriques et écrous, assortiment . . . . . SFS 101
Boulons, arbres . . . . . LG 910

Boulons, épaulement . . . SFS 105
Boulons, lame . . . SFS 105
Boulons, poignée . . . SFS 105
Bouton de conduit de câble d'accélérateur . . . LG 721
Boutons de poignée . . . LG 802
Boutons, poignée . . . LG 802
Bras de direction, MTD . . . LG 939
Bras de levage . . . LG 794
Bras de stabilisateur . . . LG 793
Briggs & Stratton, bagues . . . LG 750
Briggs & Stratton, bagues de piston . . . LG 750
Briggs & Stratton, balais de démarreur électrique . . . LG 927
Briggs & Stratton, bielles . . . LG 750
Briggs & Stratton, bielles . . . LG 750
Briggs & Stratton, bobines d'allumage . . . LG 784–787
Briggs & Stratton, bouchon de remplissage d'huile . . . LG 750
Briggs & Stratton, Bouchons de réservoir de carburant . . . LG 770
Briggs & Stratton, carburateurs . . . LG 596
Briggs & Stratton, cliquets et ressorts de démarreur . . . LG 930–931
Briggs & Stratton, cuves de carburateur . . . LG 625
Briggs & Stratton, dent de loup de manivelle de mise en marche . . . LG 929
Briggs & Stratton, diaphragmes de carburateur . . . LG 622–623
Briggs & Stratton, engrenages de démarreur électrique . . . LG 927–928
Briggs & Stratton, ensembles de joints statiques . . . LG 745
Briggs & Stratton, entraînements de démarreur électrique . . . LG 926–927
Briggs & Stratton, filtres à air en mousse . . . LG 185–189
Briggs & Stratton, filtres à air en papier . . . LG 179–185
Briggs & Stratton, filtres à huile . . . LG 814–819
Briggs & Stratton, filtres de conduite de carburant . . . LG 774–776
Briggs & Stratton, flotteurs de carburateur . . . LG 624
Briggs & Stratton, joints . . . LG 749
Briggs & Stratton, joints étanches à l'huile . . . LG 749
Briggs & Stratton, joints statiques . . . LG 745–749
Briggs & Stratton, lanceurs . . . LG 923
Briggs & Stratton, moteurs de démarreur . . . LG 915–916
Briggs & Stratton, plots et condensateur . . . LG 789
Briggs & Stratton, poigné de démarreur . . . LG 930
Briggs & Stratton, pointeaux d'admission de carburateur . . . LG 628
Briggs & Stratton, poires d'amorçage . . . LG 629–632
Briggs & Stratton, poulies de lanceur . . . LG 933
Briggs & Stratton, régulateurs de tension . . . LG 731
Briggs & Stratton, ressorts de lanceur . . . LG 927
Briggs & Stratton, silencieux . . . LG 806–807
Briggs & Stratton, tableau de référence rapide . . . LG 1048–1071
Briggs & Stratton, trousses de carburateur . . . LG 602–604
Bunton, arbres . . . LG 874–875
Bunton, bagues . . . LG 230
Bunton, courroies . . . LG 269–270
Bunton, embrayages PDF électriques . . . LG 733–741
Bunton, interrupteurs de prise de force . . . LG 946–947
Bunton, interrupteurs de sécurité . . . LG 947–948
Bunton, lames . . . LG 390–392
Bunton, poulies de tension . . . LG 826–827
Bunton, roues . . . LG 1029–1046
Bunton, roulements à billes . . . LG 230
Bush Hog, arbres . . . LG 876–877
Bush Hog, courroies . . . LG 270–271
Bush Hog, lames . . . LG 392–394
Butées de pivot de fil d'accélérateur . . . LG 722

## C

Câble d'outils pour long manche, 120v Professional Series™ . . . OPE 36
Câbles d'accélérateur . . . LG 701–720
Câbles d'engagement de plateau de coupe . . . LG 701–720
Câbles d'étrangleur . . . LG 701–720
**CÂBLES DE COMMANDE . . . LG 699–723**
Câbles de commande à double effet . . . LG 720–721
Câbles de commande d'autopropulsion . . . LG 701–720
Câbles de commande d'entraînement . . . LG 701–720
Câbles de commande, AYP . . . LG 701–703
Câbles de commande, Bobcat . . . LG 703
Câbles de commande, Cub Cadet . . . LG 703–708
Câbles de commande, Dixie hacheur . . . LG 708
Câbles de commande, Excel . . . LG 708
Câbles de commande, Gravely . . . LG 708
Câbles de commande, Honda . . . LG 708–709
Câbles de commande, Hustler . . . LG 708
Câbles de commande, John Deere . . . LG 709
Câbles de commande, McClane . . . LG 709
Câbles de commande, MTD . . . LG 710–715
Câbles de commande, Murray . . . LG 715–717
Câbles de commande, pousser-tirer . . . LG 720–721
Câbles de commande, Scag . . . LG 717–718
Câbles de commande, Snapper . . . LG 718–719
Câbles de commande, Toro . . . LG 719–720
Câbles de commande, universels . . . LG 699–701
Câbles de commande, Wisconsin . . . LG 720
Câbles de frein . . . LG 701–720
Câbles de zone de sécurité . . . LG 701–720
Câbles PDF . . . LG 701–720
Câbles, batterie . . . LG 744
Câbles, commande . . . LG 701–720
Câbles, commande d'auto-propulsion . . . LG 701–720
Câbles, commande d'entraînement . . . LG 701–720
Câbles, commande de direction pour souffleuse à neige . . . LG 701–720
Câbles, commande de goulotte pour souffleuse à neige . . . LG 701–720
Câbles, commande de puissance . . . LG 701–720
Câbles, commande de vis sans fin pour souffleuse à neige . . . LG 701–720
Câbles, engagement de plateau . . . LG 701–720
Câbles, étrangleur . . . LG 701–720
Câbles, frein . . . LG 701–720
Câbles, prise de force . . . LG 701–720
Caisses-cellules de pièces . . . SFS 21
Came interne . . . LG 956–957
Carburant sans éthanol, Carburants VP . . . SFS 79–81
Carburants VP, carburant sans éthanol . . . SFS 79–81
Carburants VP, Fix-It FuelMC . . . SFS 81
Carburants VP, PowerSpout . . . SFS 81
Carburants VP, siphon . . . SFS 81
Carburateur, Briggs & Stratton . . . LG 596
Carburateur, Honda . . . LG 596–597
Carburateur, Robin . . . LG 596
Carburateur, Tecumseh . . . LG 598–601
Carburateur, Tillotson . . . LG 595
Carburateur, Walbro . . . LG 595
Carburateur, Yamakoyo . . . LG 601
Carburateur, Zama . . . LG 595
Carburateurs de remplacement complets . . . LG 595–601
**CARBURATEURS ET PIÈCES DE CARBURATEURS . . . LG 594–674**
Carburateurs Walbro . . . LG 595
Carburateurs, complets . . . LG 595–601
Carburateurs, cuves . . . LG 625
Caroni, arbres . . . LG 877
Caroni, lames . . . LG 395
Cartouches de graisse . . . SFS 12
Casque de sécurité . . . SFS 112
Casque, sécurité . . . SFS 112
Catalogue, Oregon® . . . SFS 23
Chaîne à rouleau, demi-maillons . . . LG 676
Chaîne à rouleau, maillons coudés . . . LG 676
Chaîne à rouleau, maillons de jonction . . . LG 676
Chaîne à rouleaux . . . LG 676
**CHAÎNE COUPANTE . . . FOR 103–147**
Chaîne coupante pour scie à long manche sans fil PS250 . . . OPE 25
Chaîne coupante, affûteuses de chaîne automatiques . . . SFS 32–40
Chaîne coupante, caractéristiques . . . FOR 108–109
Chaîne de scie à long manche . . . OPE 20
Chaîne PowerSharp® de rechange pour matériel de plein air motorisé . . . OPE 25
Chaîne, demi-maillons de rouleau . . . LG 676
Chaîne, maillons coudés de rouleau . . . LG 676
Chaîne, maillons de jonction de rouleau . . . LG 676
Chaîne, scie à chaîne . . . FOR 103–147
Chaînes de pneus . . . LG 965
Chaînes, pneu . . . LG 965
Chambre à air . . . LG 956–957
Chambres à air, pneus . . . LG 956–957
Chargeur C1600, 120v Professional Series™ . . . OPE 36
Chargeur de batterie C600 . . . OPE 10
Chargeur de batterie rapide . . . OPE 10
Chargeur de batterie rapide C750 . . . OPE 10
Chargeur, batterie . . . LG 743
Chasse-rivet d'établi pour chaîne coupante . . . SFS 43
Chausson en néoprène . . . SFS 113
Chausson, néoprène . . . SFS 113
Chevilles d'attelage . . . LG 795
Chevilles d'attelage . . . LG 795
Chevilles d'attelage, pliées . . . LG 796
Chevilles d'attelage, tête rouge . . . LG 796
Cinétique, fendeuse de bûches . . . OPE 44–45
Clavette droite, en barre . . . LG 727
Clavettes de sécurité . . . LG 795

# 2019 Index Alphabétique – FR


Clavettes Woodruff, emballage de présentation . . . LG 801
Clés d'allumage . . . LG 945–946
Clés de machines, emballage de présentation . . . LG 801
Clés de volant . . . LG 789
Clés, allumage . . . LG 945–946
Clés, démarreur . . . LG 945–946
Clés, volant . . . LG 790
Coin à 4 directions, fendeuses de bûches . . . OPE 47
Coins d'abattage . . . SFS 14
Coins, d'abattage . . . SFS 14
Colle Gorilla . . . SFS 97
Colle, Gorilla . . . SFS 97
Colliers d'arbre, emballage de présentation . . . LG 801
Colliers de serrage de tuyau . . . LG 765
Colliers de serrage de tuyau, assortiment . . . SFS 104
Colliers de serrage, tuyau . . . LG 765
Comet, courroies . . . LG 272
Compresseur de ressort de soupape . . . SFS 66
Compresseur, anneaux . . . SFS 66
Compresseur, ressort de soupape . . . SFS 66
Compteur d'heures . . . LG 741
Compteur, heures . . . LG 741
Conduit d'essence . . . LG 761–763
**CONDUIT D'ESSENCE ET ACCESSOIRES . . . LG 761–780**
Conduit d'essence, Oregon® . . . LG 761
Conduit d'essence, Tygon® . . . LG 761
Conduit extérieur de câble d'accélérateur, rouleau . . . LG 721
Conduit, carburant . . . LG 761–763
Conduits d'essence Tygon® . . . LG 761
Conduits d'essence, scies à chaîne . . . LG 688–690
Contacteurs d'interdiction . . . LG 947–948
Contacteurs-relais . . . LG 729
Coquille de pluie . . . SFS 115
**CORDE DE DÉMARREUR . . . LG 937**
Corde de démarreur manuel . . . LG 937
Corde, démarreur . . . LG 937
Country Clipper, courroies . . . LG 272
Country Clipper, lames . . . LG 395–397
Coupe-bordure ST120VX, 120v Professional Series™ . . . OPE 33
Coupe-bordure ST600, accessoires multiples sans fil . . . OPE 13
Coupe-bordure/Taille-bordure . . . OPE 19
Coupe-bordure/taille-bordure . . . OPE 19
Coupe-bordure/Taille-bordure, ST275 Oregon® 40 V MAX . . . OPE 19
Coupe, chaîne coupante . . . FOR 103–147
Courroie de taille-bordures, universel . . . LG 1027
Courroie universelle pour taille-bordures . . . LG 1027
**COURROIES . . . LG 250–339**
Courroies de cordon en aramide supérieures . . . LG 334–335
Courroies par grosseur, table . . . LG 250–258
Courroies tissées de polyester industrielles . . . LG 336–337
Courroies, AMF . . . LG 259
Courroies, Ariens . . . LG 264–266
Courroies, AYP . . . LG 259–264
Courroies, Bad Boy . . . LG 266–267
Courroies, Bobcat . . . LG 267–269
Courroies, Bunton . . . LG 269–270
Courroies, Bush Hog . . . LG 270–271
Courroies, Club Car . . . LG 272
Courroies, Comet . . . LG 272
Courroies, Country Clipper . . . LG 272
Courroies, Craftsman . . . LG 315
Courroies, Cub Cadet . . . LG 273–277
Courroies, Dixie Chopper . . . LG 277
Courroies, Dixon . . . LG 278
Courroies, Dynamark . . . LG 278
Courroies, E-Z Roll . . . LG 278
Courroies, Encore . . . LG 278
Courroies, Excel . . . LG 279
Courroies, Exmark . . . LG 279–283
Courroies, EZ-Go . . . LG 283
Courroies, Ferris . . . LG 283–284
Courroies, fil câblé d'aramide de qualité supérieure . . . LG 334–335
Courroies, fil câblé en polyester industriel . . . LG 336–337
Courroies, Grasshopper . . . LG 284–285
Courroies, Gravely . . . LG 285–287
Courroies, Great Dane . . . LG 287–288
Courroies, Honda . . . LG 288
Courroies, Husqvarna . . . LG 288–292
Courroies, Hustler . . . LG 279
Courroies, John Deere . . . LG 292–297
Courroies, Kees . . . LG 297
Courroies, King Kutter . . . LG 298
Courroies, Kubota . . . LG 298–299
Courroies, Lawn Boy . . . LG 299
Courroies, Lesco . . . LG 299
Courroies, Little Wonder . . . LG 300
Courroies, Manco . . . LG 300
Courroies, Massey Fergunson . . . LG 300
Courroies, McClane . . . LG 300
Courroies, MTD . . . LG 300–306
Courroies, Murray . . . LG 306–309
Courroies, Noma . . . LG 309–310
Courroies, Partner . . . LG 310
Courroies, Polaris ATV . . . LG 310
Courroies, Power Trim . . . LG 311
Courroies, Roper . . . LG 311–312
Courroies, Scag . . . LG 312–314
Courroies, scies à tronçonner . . . LG 684
Courroies, Scotts . . . LG 315
Courroies, Sears . . . LG 315
Courroies, Simplicity . . . LG 316
Courroies, Snapper . . . LG 316–319
Courroies, souffleuses à neige . . . LG 862–863
Courroies, Stihl . . . LG 320
Courroies, Toro . . . LG 320–323
Courroies, Troy-Bilt . . . LG 324
Courroies, Walker . . . LG 325
Courroies, Woods . . . LG 325–330
Courroies, Wright Stander . . . LG 330–331
Courroies, Yazoo . . . LG 297
CourroiesManco . . . LG 300
Couteau, fil pour coupe-bordure . . . LG 985
Couvercle de tondeuse autoportée . . . LG 803
Couvercle, borne de batterie . . . LG 743
Couvercle, tondeuse autoportée . . . LG 803
Couvercles, guides de scie à chaîne . . . SFS 13
Couvre-borne de bougie . . . LG 787–788
Craftsman, courroies . . . LG 315
Craftsman, lames . . . LG 397–404
Crayons de marquage . . . SFS 19
Crayons, marquage . . . SFS 19
Crics, supérieurs . . . LG 796–798
Crochet de présentoir, 5 po . . . SFS 20
CS1500, guide-chaîne . . . OPE 25
CS250, guide-chaîne . . . OPE 25
CS300, guide-chaîne . . . OPE 25
Cub Cadet, applications de guide et chaîne . . . FOR 25
Cub Cadet, applications de pignon . . . FOR 187
Cub Cadet, apprêt pour souffleuse à neige . . . LG 860
Cub Cadet, arbres . . . LG 878–883
Cub Cadet, bagues . . . LG 231-232
Cub Cadet, bagues pour souffleuse à neige . . . LG 854–855
Cub Cadet, bride de goulotte de souffleuse à neige . . . LG 855
Cub Cadet, câbles de commande . . . LG 703–708
Cub Cadet, câbles de commande pour souffleuse à neige . . . LG 856–859
Cub Cadet, came de verrouillage de l'embrayage de souffleuse à neige . . . LG 856
Cub Cadet, clé de contact de souffleuse à neige . . . LG 861
Cub Cadet, courroies . . . LG 273–277
Cub Cadet, déclencheur de commande de direction pour souffleuse à neige . . . LG 856
Cub Cadet, démarreurs 120 V pour souffleuse à neige . . . LG 861
Cub Cadet, démarreurs manuels pour souffleuse à neige . . . LG 860–861
Cub Cadet, embrayages à PDF électrique . . . LG 733–741
Cub Cadet, guide de câble d'inclinaison de goulotte de souffleuse à neige . . . LG 856
Cub Cadet, interrupteurs d'allumage . . . LG 942–945
Cub Cadet, interrupteurs de prise de force . . . LG 946–947
Cub Cadet, interrupteurs de sécurité . . . LG 947–948
Cub Cadet, lames . . . LG 404–412
Cub Cadet, plaque de verrouillage pour souffleuse à neige . . . LG 856
Cub Cadet, plaques de raclage pour souffleuse à neige . . . LG 848
Cub Cadet, poulies d'entraînement . . . LG 837
Cub Cadet, poulies de tension . . . LG 826–827
Cub Cadet, roue de souffleuse à neige . . . LG 856
Cub Cadet, roues/roulettes anti-bascule . . . LG 1037–1042
Cub Cadet, roulements . . . LG 231-232
Cub Cadet, roulements pour souffleuse à neige . . . LG 854–855
Cub Cadet, silencieux . . . LG 807
Cub Cadet, trousses de carburateur . . . LG 604–605
Cub Cadet, trousses de carburateur pour souffleuse à neige . . . LG 859
Cub Cadet, vis sans fin en bronze pour souffleuse à neige . . . LG 856
Cuve de filtre . . . LG 765
Cuve de sédimentation . . . LG 765
Cuves de carburateur . . . LG 625
Cuves de carburateur, Briggs & Stratton . . . LG 625
Cuves de carburateur, Honda . . . LG 625
Cuves de carburateur, Tecumseh . . . LG 625

## D


Dayton, applications de pignon . . . FOR 187
Démarreur électrique, moteurs . . . LG 915–921
Démarreur électrique, pièces . . . LG 926–928
Démarreur, butée . . . LG 930–931
Démarreur, clés . . . LG 945–946
Démarreur, cliquets de retenue . . . LG 932
Démarreur, cliquets et ressorts . . . LG 930–931
Démarreur, cliquets et ressorts, Briggs & Stratton . . . LG 930–931
Démarreur, cliquets et ressorts, Echo . . . LG 930–931
Démarreur, cliquets et ressorts, Honda . . . LG 930–931
Démarreur, cliquets et ressorts, Stihl . . . LG 930–931
Démarreur, coupelles, Honda . . . LG 929
Démarreur, embrayage, Briggs & Stratton . . . LG 929
Démarreur, entraînements, démarreurs électriques . . . LG 926–928
Démarreur, interrupteurs . . . LG 942–945
Démarreur, moteurs . . . LG 915–921
Démarreur, moteurs, Briggs & Stratton . . . LG 915–916
Démarreur, moteurs, Honda . . . LG 918
Démarreur, moteurs, Kawasaki . . . LG 917–918
Démarreur, moteurs, Kohler . . . LG 918–919
Démarreur, moteurs, MTD . . . LG 921
Démarreur, moteurs, Onan . . . LG 921
Démarreur, moteurs, Tecumseh . . . LG 922
Démarreur, poignée, Briggs & Stratton . . . LG 929–930
Démarreur, poignée, Honda . . . LG 930
Démarreur, poignée, pour mitaine, souffleuse à neige . . . LG 851
Démarreur, poignée, Stihl . . . LG 931
Démarreur, poignée, Tecumseh . . . LG 931
Démarreur, poignées . . . LG 929–930
Démarreur, poulies, scies à chaîne . . . LG 692
Démarreur, ressorts, scies à chaîne . . . LG 693
Démarreur, solénoïdes . . . LG 729–730
Démarreur, trousses de réparation de cliquet . . . LG 932
Démarreur, vis centrales, Honda . . . LG 929
**DÉMARREURS . . . LG 915–925**
Démarreurs électriques, balais . . . LG 927
Démarreurs électriques, engrenages . . . LG 927–928
Démarreurs électriques, entraînements . . . LG 926–927
Démarreurs manuels . . . LG 922–925
Démarreurs manuels, Briggs & Stratton . . . LG 923
Démarreurs manuels, Honda . . . LG 922–923
Démarreurs manuels, Kawasaki . . . LG 924
Démarreurs manuels, Komatsu . . . LG 924
Démarreurs manuels, Mitsubishi . . . LG 924
Démarreurs manuels, MTD . . . LG 925
Démarreurs manuels, Robin . . . LG 925
Démarreurs manuels, Tecumseh . . . LG 922–925
Démarreurs, électrique . . . LG 915–921
Démarreurs, manuels . . . LG 922–925
Dent d'aérateur . . . LG 590
Dents de gouvernail, Troy-Bilt . . . LG 954
Dents, gouvernail . . . LG 954
Dérive-chaîne de chaîne coupante et riveteuse de nez de guide de scie à chaîne à usage intensif . . . SFS 45
Dérive-chaîne de poche pour chaîne coupante . . . SFS 47
Dérive-chaîne, chaîne coupante, de poche . . . SFS 47
Dérive-chaîne, d'établi chaîne coupante . . . SFS 43
DeWalt, applications de guide et chaîne . . . FOR 26
Diaphragmes de carburateur, Briggs & Stratton . . . LG 622–623
Diaphragmes de carburateur, Tecumseh . . . LG 623
Diaphragmes, carburateur . . . LG 622–623
Diodes . . . LG 741
Dispositif de protection, courroie . . . LG 802
Dispositifs d'arrêt, conduit d'essence . . . LG 766–767
Disque d'entraînement, souffleuse à neige . . . LG 851
Disques d'entraînement . . . LG 726
Dixie Chopper, arbres . . . LG 883
Dixie Chopper, câbles de commande . . . LG 708
Dixie Chopper, courroies . . . LG 277
Dixie Chopper, embrayages à PDF électrique . . . LG 733–741
Dixie Chopper, lames . . . LG 413–416
Dixie Chopper, poulies de tension . . . LG 827
Dixie Chopper, roues anti-crevaison semi-pneumatiques . . . LG 1044–1046
Dixon, arbres . . . LG 883–884
Dixon, courroies . . . LG 278
Dixon, lames . . . LG 416–428
Dixon, roues anti-crevaison semi-pneumatiques . . . LG 1044–1046
Dixon, roues pneumatiques . . . LG 1044–1046
Dixon, roulements . . . LG 232
Dolmar, applications de guide et chaîne . . . FOR 26–29
Dolmar, applications de pignon . . . FOR 187–188
Dolmar, ressorts de lanceur . . . LG 937
Dynamark, courroies . . . LG 278
Dynamow, lames . . . LG 430


## E


E-Z Roll, courroies . . . LG 278
Earthquake, applications de guide et chaîne . . . FOR 29
Earthquake, lames de coupe-bordures . . . LG 584
Earthwise, applications de guide et chaîne . . . FOR 29–30
Échelle, chaîne coupante . . . SFS 47
Echo, applications de guide et chaîne . . . FOR 30–33
Echo, applications de pignon . . . FOR 188–189
Echo, Bouchons de réservoir de carburant . . . LG 770–771
Echo, cliquets et ressorts de démarreur . . . LG 930–931
Echo, filtres à air . . . LG 189–191
Echo, lames de coupe-bordures . . . LG 584
Echo, pièces de taille-bordures et de souffleur . . . LG 1016–1018
Echo, poulies de démarreur . . . LG 933
Echo, ressorts de démarreur . . . LG 937
Écouvillon de lubrification entre jante et pneumatique . . . SFS 68
Écouvillon, lubrifiant pour talon . . . SFS 68
Écrans de carburant du carburateur . . . LG 627
Écrous à rondelle dentée . . . SFS 105
Écrous de barre, scies à chaîne . . . LG 686
Écrous de moyeu . . . SFS 105
Écrous élastique en tôle . . . SFS 105
Écrous, à rondelle dentée . . . SFS 105
Écrous, de moyeu . . . SFS 105
Écrous, de moyeux . . . LG 910
Écrous, élastique en tôle . . . SFS 105
Écrous, guides de scie à chaîne . . . LG 686
Efco, applications de guide et chaîne . . . FOR 33–35
Efco, applications de pignon . . . FOR 189
Efco, filtres à air . . . LG 210
EHP Bagues . . . LG 227–228
EHP Roulements . . . LG 227–228
Emballage de présentation, assortiment de clavettes de machinerie . . . LG 801
Emballage de présentation, axes à épaulement . . . LG 799
Emballage de présentation, bagues de type E . . . LG 799
Emballage de présentation, clavettes de sécurité . . . LG 800
Emballage de présentation, clavettes Woodruff . . . LG 801
Emballage de présentation, collets d'arbre . . . LG 801
Emballage de présentation, épingles . . . LG 800
Emballage de présentation, goupilles à ressort . . . LG 801
Emballage de présentation, goupilles fendues . . . LG 799
Emballage de présentation, graisseurs . . . LG 800
Emballages de magasin, filtres à air . . . LG 178
Embouts d'accouplement . . . LG 938–939
Embrayage à prise de force . . . LG 733–741
Embrayage à prise de force électrique . . . LG 733–741
Embrayage de lame, électrique . . . LG 733–741
Embrayage, à prise de force électrique . . . LG 733–741
**EMBRAYAGES CENTRIFUGES . . . LG 675**
Enclume réglable . . . SFS 47
Enclume, réglable . . . SFS 47
Encore, bagues . . . LG 232
Encore, courroies . . . LG 278
Encore, embrayages à prise de force électrique . . . LG 733–741
Encore, embrayages à prise de force électrique . . . LG 733–741
Encore, lames . . . LG 431–434
Encore, roulements . . . LG 232
Enginaire, filtres à air en mousse . . . LG 203
Engrenages, démarreurs électriques . . . LG 927–928
Ensemble avec clé Allen en T . . . SFS 66
Ensemble chasse-goupille . . . SFS 68
Ensemble d'adaptateur de riveteuse, pas de 3/4 po . . . SFS 47
Ensemble de joints statiques, Kohler . . . LG 757
Ensemble de joints statiques, Tecumseh . . . LG 757
Ensemble engrenage de direction, Murray . . . LG 941
Ensemble scie à long manche et batterie . . . OPE 20
Ensemble taille-haie et batterie . . . OPE 21
Ensemble taille-haie et coupe-bordures avec batterie . . . OPE 19
Ensembles de joints statiques - Briggs & Stratton . . . LG 745
Ensembles de joints statiques, Honda . . . LG 751
Ensembles, carburateur remis en état . . . LG 602–621
Entretoises d'arbre . . . LG 910
Entretoises, arbres . . . LG 910

# 2019 Index Alphabétique – FR


Épingles, assortiment . . . . . SFS 100
Épingles, emballage de présentation . . . . . LG 800
**ÉQUIPEMENT DE SÉCURITÉ . . . . . SFS 108–121**
Esses . . . . . LG 803
Esses . . . . . LG 794
Esses, assortiment . . . . . SFS 104
Essieux porteurs, tondeuses à gazon . . . . . SFS 77–78
Essieux, MTD . . . . . LG 938
Étau de limage pour bûcherons . . . . . SFS 14
Étau, de limage pour bûcherons . . . . . SFS 14
Évents de circuit de carburant . . . . . LG 763–764
Everide, lames . . . . . LG 434
Excel, arbres . . . . . LG 884
Excel, câbles de commande . . . . . LG 708
Excel, courroies . . . . . LG 279
Excel, lames . . . . . LG 470–475
Excel, poulies de tension . . . . . LG 827
Exmark, arbres . . . . . LG 884–889
Exmark, bagues . . . . . LG 233-234
Exmark, Bouchons de réservoir de carburant . . . . . LG 771
Exmark, courroies . . . . . LG 279–283
Exmark, filtres à air . . . . . LG 191
Exmark, interrupteurs de prise de force . . . . . LG 946–947
Exmark, interrupteurs de sécurité . . . . . LG 947–948
Exmark, joints à rotule . . . . . LG 938–939
Exmark, lames . . . . . LG 434–443
Exmark, poulies d'entraînement . . . . . LG 836
Exmark, poulies de tension . . . . . LG 827–828
Exmark, roues anti-crevaison semi-pneumatiques . . . . . LG 1044–1046
Exmark, roues pneumatiques . . . . . LG 1044–1046
Exmark, roues/roulettes anti-bascule . . . . . LG 1037–1042
Exmark, roulements . . . . . LG 233-234
Extracteur d'engrenage . . . . . SFS 65
Extracteur d'huile . . . . . SFS 67
Extracteur de carburant . . . . . SFS 67
Extracteur de volant . . . . . SFS 65
Extracteur, carburant . . . . . SFS 67
Extracteur, huile . . . . . SFS 67
Extracteur, pignon . . . . . SFS 65
Extracteur, volant . . . . . SFS 65
EZ-Go, courroies . . . . . LG 283


## F


Fairmont Hydraulic, applications de guide et chaîne . . . . . FOR 35–36
Fendeuse de bûches, 22 tonnes . . . . . OPE 39
Fendeuse de bûches, 28 tonnes . . . . . OPE 40
Fendeuse de bûches, 28 tonnes Extend Split™ . . . . . OPE 41
Fendeuse de bûches, 35 tonnes . . . . . OPE 42
Fendeuse de bûches, cinétique . . . . . OPE 44–45
Fendeuses de bûches . . . . . OPE 38–47
**FENDEUSES DE BÛCHES . . . . . OPE 38–47**
Fendeuses de bûches, coin à 4 directions . . . . . OPE 47
Ferris, arbres . . . . . LG 889
Ferris, courroies, . . . . . LG 283–284
Ferris, lames . . . . . LG 443–446
Ferris, roues/roulettes anti-bascule . . . . . LG 1037–1042
Ferris, roulements . . . . . LG 234
Fil de coupe de taille-bordures sans fil ST275 . . . . . OPE 26
Fil de coupe de taille-bordures, Biotrim™ . . . . . LG 978
Fil de coupe de taille-bordures, coupeur . . . . . LG 985
Fil de coupe de taille-bordures, FlexiBlade™ . . . . . LG 984
Fil de coupe de taille-bordures, Gator® SpeedLoad™ . . . . . LG 973
Fil de coupe de taille-bordures, Gatorline™ longueurs précoupées . . . . . LG 983
Fil de coupe de taille-bordures, Platinum Gatorline™ . . . . . LG 979
Fil de coupe de taille-bordures, Red Round Gatorline™ . . . . . LG 983
Fil de coupe de taille-bordures, Round Gatorline™ . . . . . LG 981
Fil de coupe de taille-bordures, Round Magnum Gatorline™ . . . . . LG 980
Fil de coupe de taille-bordures, Square Gatorline™ . . . . . LG 981
Fil de coupe de taille-bordures, Square Magnum Gatorline™ . . . . . LG 980
Fil de coupe de taille-bordures, SuperTwist Magnum Gatorline™ . . . . . LG 979
Fil de coupe Gatorline en platine . . . . . OPE 27
Fil de coupe-bordures Gatorline pour ST275 . . . . . OPE 26
**FIL ET TÊTE DE COUPE DE TAILLE-BORDURES . . . . . LG 966–1015**
Fil intérieur de câble d'accélérateur, rouleau . . . . . LG 721
Fil primaire . . . . . LG 742
Fil, primaire . . . . . LG 742
Fils métalliques d'attache . . . . . LG 722
Filtre à carburant, de conduite . . . . . LG 774–776
Filtre à essence, intérieur du réservoir . . . . . LG 776–779
**FILTRES À AIR . . . . . LG 178–222**
Filtres à air, Ariens . . . . . LG 179
Filtres à air, Briggs & Stratton, mousse . . . . . LG 185–189
Filtres à air, Briggs & Stratton, papier . . . . . LG 179–185
Filtres à air, Echo . . . . . LG 189–191
Filtres à air, Efco . . . . . LG 210
Filtres à air, Enginaire . . . . . LG 203
Filtres à air, Exmark . . . . . LG 191
Filtres à air, Homelite . . . . . LG 191–192
Filtres à air, Honda, couvercle . . . . . LG 196
Filtres à air, Honda, mousse . . . . . LG 195–196
Filtres à air, Honda, papier . . . . . LG 192–194
Filtres à air, Husqvarna . . . . . LG 197–198
Filtres à air, Kawasaki, mousse . . . . . LG 201–203
Filtres à air, Kawasaki, papier . . . . . LG 198–201
Filtres à air, Kohler, mousse . . . . . LG 206–207
Filtres à air, Kohler, papier . . . . . LG 203–206
Filtres à air, Kubota . . . . . LG 208
Filtres à air, Lawn-Boy . . . . . LG 209
Filtres à air, Maruyama . . . . . LG 209
Filtres à air, McCulloch . . . . . LG 209
Filtres à air, Mitsubishi . . . . . LG 210
Filtres à air, MTD . . . . . LG 210
Filtres à air, Oleo-Mac . . . . . LG 210
Filtres à air, Onan . . . . . LG 211
Filtres à air, paquets pour atelier . . . . . LG 178
Filtres à air, Partner . . . . . LG 211
Filtres à air, Poulan . . . . . LG 211–212
Filtres à air, RedMax . . . . . LG 212
Filtres à air, scies à chaîne . . . . . LG 678–684
Filtres à air, scies à tronçonner . . . . . LG 678–684
Filtres à air, Shindaiwa . . . . . LG 212–213
Filtres à air, Stihl . . . . . LG 213–216
Filtres à air, Tecumseh, mousse . . . . . LG 219
Filtres à air, Tecumseh, papier . . . . . LG 216–218
Filtres à air, Toro . . . . . LG 219–220
Filtres à air, Wheel Horse . . . . . LG 220
Filtres à air, Wisconsin . . . . . LG 220
Filtres à air, Wisconsin Robin . . . . . LG 220–222
Filtres à carburant . . . . . LG 627
Filtres à carburant, de type à cuvette . . . . . LG 765
Filtres à carburant, scies à chaîne . . . . . LG 691–692
Filtres à essence pour intérieur du réservoir . . . . . LG 776–779
Filtres à essence pour intérieur du réservoir, assortiment . . . . . SFS 103
**FILTRES À HUILE . . . . . LG 814–819**
Filtres à huile hydraulique . . . . . LG 819
Filtres à huile, Briggs & Stratton . . . . . LG 814–819
Filtres à huile, Generac . . . . . LG 814–819
Filtres à huile, Honda . . . . . LG 814–819
Filtres à huile, Kawasaki . . . . . LG 814–819
Filtres à huile, Kohler . . . . . LG 814–819
Filtres à huile, Tecumseh . . . . . LG 814–819
Filtres de conduite de carburant, Bobcat . . . . . LG 774–776
Filtres de conduite de carburant, Briggs & Stratton . . . . . LG 774–776
Filtres de conduite de carburant, John Deere . . . . . LG 774–776
Filtres de conduite de carburant, Kawasaki . . . . . LG 774–776
Filtres de conduite de carburant, Kohler . . . . . LG 774–776
Filtres de conduite de carburant, Kubota . . . . . LG 774–776
Filtres de conduite de carburant, Scag . . . . . LG 774–776
Filtres de conduite de carburant, Snapper . . . . . LG 774–776
Filtres de conduite de carburant, Tecumseh . . . . . LG 774–776
Filtres de conduite de carburant, Toro . . . . . LG 774–776
Filtres, air . . . . . LG 178-222
Filtres, de conduite de carburant . . . . . LG 774–776
Filtres, huile . . . . . LG 814–819
Filtres, huile hydraulique . . . . . LG 819
Fix-It Fuel, carburants VP . . . . . SFS 81
Flotteurs de carburateur . . . . . LG 624–625
Flotteurs de carburateur, Briggs & Stratton . . . . . LG 624
Flotteurs de carburateur, Honda . . . . . LG 624
Flotteurs de carburateur, Oregon® . . . . . LG 624–625
Flotteurs de carburateur, Tecumseh . . . . . LG 625
Flotteurs, carburateurs . . . . . LG 624–625
Ford/New Holland, lames . . . . . LG 447
Fourche ajustable . . . . . LG 805
Fourche, réglables . . . . . LG 805
**FOURNITURES UTILISÉES SUR LE TERRAIN . . . . . SFS 72–107**
Frein, lame . . . . . LG 802
Frontier, applications de pignon . . . . . FOR 189
Fusibles . . . . . LG 742

## G


Gants. . . . SFS 116
Gator® SpeedLoad™ Fil de coupe-bordure de rechange . . . LG 973
Gator® SpeedLoad™ Pièces de rechange . . . LG 973
Gator® SpeedLoad™ Tableau d'application . . . LG 974–978
Gator® SpeedLoad™ Tête de coupe. . . . LG 968–978
Generac, filtres à huile . . . LG 814–819
Giant Vac, lames . . . LG 447–448
Gilson, arbres. . . . LG 891
Gonfleur Aerosal avec tuyau souple . . . SFS 94
Gonfleur de pneus, aérosol avec tuyau. . . . SFS 94
Gonfleur de positionneur de talon, Oregon® . . . SFS 70
Goodall, lames . . . LG 390–392
Goupille fendue, assortiment . . . SFS 100
Goupilles cylindriques, assortiment . . . SFS 102
Goupilles de cisaillement du volant. . . . LG 789
Goupilles de cisaillement, volant . . . LG 790
Goupilles de dent de gouvernail, assortiment . . . SFS 102
Goupilles de verrouillage, emballage de présentation . . . LG 800
Goupilles élastiques, assortiment . . . SFS 102
Goupilles élastiques, emballage de présentation . . . LG 801
Goupilles fendues, emballage de présentation . . . LG 799
Graisse "0" . . . LG 728
Graisse "00". . . . LG 728
Graisse haute température, cartouche de 14 oz . . . SFS 92
Graisse, haute température, cartouche de 14 oz. . . . SFS 92
Graisseurs, assortiment . . . SFS 101
Graisseurs, emballage de présentation . . . LG 800
Grasshopper, arbres . . . LG 890
Grasshopper, bagues. . . . LG 234–235
Grasshopper, courroies . . . LG 284–285
Grasshopper, embrayages à prise de force électrique . . . LG 733–741
Grasshopper, interrupteurs de prise de force . . . LG 946–947
Grasshopper, interrupteurs de sécurité . . . LG 947–948
Grasshopper, lames . . . LG 448–450
Grasshopper, poulies de tension . . . LG 828
Grasshopper, roues pneumatiques . . . LG 1044–1046
Grasshopper, roues/roulettes anti-bascule . . . LG 1037–1042
Grasshopper, roulements . . . LG 234–235
Gravely, arbres . . . LG 890–891
Gravely, bagues. . . . LG 235
Gravely, câbles de commande. . . . LG 708
Gravely, courroies . . . LG 285–287
Gravely, embrayages à prise de force électrique . . . LG 733–741
Gravely, interrupteurs de prise de force . . . LG 946–947
Gravely, interrupteurs de sécurité . . . LG 947–948
Gravely, lames . . . LG 450–456
Gravely, roues anti-crevaison semi-pneumatiques . . . LG 1044–1046
Gravely, roues/roulettes anti-bascule . . . LG 1037–1042
Gravely, roulements . . . LG 235
Gravely, silencieux . . . LG 807
Great Dane, arbres . . . LG 891
Great Dane, courroies . . . LG 287–288
Great Dane, courroies . . . LG 456–457
Great Dane, embrayages à prise de force électrique . . . LG 733–741
Green Machine, poulies de démarreur manuel. . . . LG 936
Green Machine, ressorts de démarreur manuel . . . LG 937
Greenworks, applications de guide et chaîne . . . FOR 36–37
Guide de limage monté sur le guide-chaîne professionnel, chaîne coupante. . . . SFS 11
Guide de lime, chaîne coupante . . . SFS 9
**GUIDE-CHAÎNE –** Montage de scie . . . **FOR 171–177**
**GUIDE-CHAÎNES . . . FOR 148–179**
Guide-chaînes , système de numéros de pièce . . . FOR 152–153
Guide-chaînes, familles de guide-chaînes Oregon® . . . FOR 150–169
Guides-chaînes de rechange pour matériel de plein air motorisé . . . OPE 25
Guides-chaînes pour matériel de plein air motorisé . . . OPE 25


## H


Harnais de taille-bordures, universel . . . LG 1027
Harnais universel pour taille-bordures. . . . LG 1027
Hitachi, applications de guide et chaîne . . . FOR 37–38
Hoffco, ressorts de démarreur manuel. . . . LG 937
Homelite, applications de guide et chaîne . . . FOR 38–40
Homelite, applications de pignon . . . FOR 189–190
Homelite, bouchons de réservoir de carburant . . . LG 771
Homelite, filtres à air. . . . LG 191–192
Homelite, lames de coupe-bordures . . . LG 584
Homelite, pièces de taille-bordures et de souffleur. . . . LG 1019
Homelite, poulies de démarreur manuel . . . LG 934
Homelite, ressorts de démarreur manuel . . . LG 937
Homelite, trousse de carburateur. . . . LG 605
Honda, à tête longue . . . LG 755
Honda, bagues . . . LG 754
Honda, bagues de piston. . . . LG 754
Honda, barres de raclage pour souffleuse à neige . . . LG 847
Honda, bielles. . . . LG 755
Honda, bobines d'allumage . . . LG 784–787
Honda, bouchon de remplissage d'huile . . . LG 756
Honda, bouchons de réservoir de carburant . . . LG 771
Honda, boutons d'arrêt d'urgence. . . . LG 949
Honda, câbles de commande . . . LG 708–709
Honda, carburateurs . . . LG 596–597
Honda, cliquets et ressorts de démarreur . . . LG 930–931
Honda, coupelles de démarreur. . . . LG 929
Honda, courroies . . . LG 288
Honda, couvercle de filtre à air . . . LG 196
Honda, cuves de carburateurs. . . . LG 625
Honda, démarreurs manuels . . . LG 922–923
Honda, ensembles de joints statiques . . . LG 751
Honda, filtres à air en mousse. . . . LG 195–196
Honda, filtres à air en papier. . . . LG 192–194
Honda, filtres à huile . . . LG 814–819
Honda, flotteurs de carburateurs . . . LG 624
Honda, interrupteurs de capteur d'huile . . . LG 950
Honda, interrupteurs marche-arrêt. . . . LG 949
Honda, isolateur de carburateur . . . LG 601
Honda, jauge . . . LG 756
Honda, joints étanches. . . . LG 756
Honda, joints étanches à l'huile . . . LG 756
Honda, joints statiques. . . . LG 751–753
Honda, lames . . . LG 457–458
Honda, moteurs de démarreur . . . LG 918
Honda, pales pour souffleuse à neige . . . LG 846
Honda, patins pour souffleuse à neige . . . LG 850
Honda, piston . . . LG 754
Honda, poignée de démarreur. . . . LG 930
Honda, pointeaux d'admission du carburateur. . . . LG 628–629
Honda, poulies de démarreur manuel . . . LG 934
Honda, réservoirs à essence . . . LG 770
Honda, ressorts de démarreur manuel. . . . LG 937
Honda, roues . . . LG 1029–1046
Honda, roulements . . . LG 235
Honda, silencieux. . . . LG 807–808
Honda, soupapes d'admission. . . . LG 755
Honda, soupapes d'échappement . . . LG 755
Honda, tiges. . . . LG 755
Honda, trousses de carburateur . . . LG 605
Honda, tuyau d'échappement . . . LG 807–808
Honda, vis centrale de démarreur. . . . LG 929
Honda, vis de cisaillement pour souffleuse à neige . . . LG 852–853
Hose & Grommet, trousses de circuit de carburant . . . LG 764–765
HT250 Taille-haie, électrique sans fil. . . . OPE 21
Huile absorbante, Dri. . . . SFS 68
Huile hydraulique, anti-usure SP . . . SFS 84
Huile moteur, 2 temps . . . SFS 82
Huile, 2 temps. . . . SFS 82
Huile, guide et chaîne de scie à chaîne . . . SFS 19
Huile, hydraulique, anti-usure SP. . . . SFS 84
Huile, Only ONe™ moteur à 2 temps . . . SFS 19
Huile, outil pneumatique . . . SFS 83
Huile, synthétique 2 temps, carburants VP. . . . SFS 83
Huile, synthétique 2 temps, carburants VP. . . . SFS 83
Huskee, lames . . . LG 458
Husqvarna, adaptateur de volant . . . LG 939
Husqvarna, adaptateurs de lame . . . LG 340
Husqvarna, applications de guide et chaîne . . . FOR 40–47
Husqvarna, applications de pignon . . . FOR 190–193
Husqvarna, arbre de direction. . . . LG 940
Husqvarna, arbres . . . LG 870–876
Husqvarna, articulations de direction . . . LG 939
Husqvarna, bague de direction . . . LG 941
Husqvarna, bobines d'allumage. . . . LG 784–787
Husqvarna, courroies . . . LG 288–292
Husqvarna, embrayages à prise de force électrique . . . LG 733–741
Husqvarna, filtres à air. . . . LG 197–198
Husqvarna, interrupteurs d'arrêt d'urgence . . . LG 949
Husqvarna, interrupteurs d'allumage . . . LG 942–945
Husqvarna, interrupteurs marche-arrêt . . . LG 949
Husqvarna, lames . . . LG 458–470

# 2019 Index Alphabétique – FR


Husqvarna, lames de coupe-bordures . . . . . LG 585
Husqvarna, pièces de taille-bordures et de souffleur. . . . . LG 1020
Husqvarna, poulies de démarreur manuel . . . . . LG 934
Husqvarna, ressorts de démarreur manuel . . . . . LG 937
Husqvarna, roues. . . . . LG 1029–1046
Husqvarna, secteur denté de direction . . . . . LG 941
Husqvarna, support d'arbre de direction . . . . . LG 939
Husqvarna, tige d'entraînement. . . . . LG 939
Husqvarna, vis de cisaillement pour souffleuse à neige . . . . . LG 852–853
Hustler, arbres . . . . . LG 884
Hustler, câbles de commande . . . . . LG 708
Hustler, courroies . . . . . LG 279
Hustler, embrayages à prise de force électrique . . . . . LG 733–741
Hustler, lames . . . . . LG 470–475
Hustler, poulies de tension. . . . . LG 827
Hustler, roulements . . . . . LG 236
Hydromètre, batterie . . . . . LG 744


## I


Ingersoll, lames . . . . . LG 475
Interrupteur, marche-arrêt . . . . . LG 949
**INTERRUPTEURS. . . . . LG 942–950**
Interrupteurs d'allumage, Cub Cadet . . . . . LG 942–945
Interrupteurs d'allumage, John Deere . . . . . LG 942–945
Interrupteurs d'allumage . . . . . LG 942–945
Interrupteurs d'allumage, Ariens . . . . . LG 942–945
Interrupteurs d'allumage, AYP. . . . . LG 942–945
Interrupteurs d'allumage, Husqvarna . . . . . LG 942–945
Interrupteurs d'allumage, Kohler . . . . . LG 942–945
Interrupteurs d'allumage, MTD . . . . . LG 942–945
Interrupteurs d'allumage, Murray. . . . . LG 942–945
Interrupteurs d'allumage, Snapper . . . . . LG 942–945
Interrupteurs de capteur d'huile, Honda . . . . . LG 950
Interrupteurs de sécurité . . . . . LG 947–948
Interrupteurs marche-arrêt . . . . . LG 949
Interrupteurs PDF . . . . . LG 946–947
Interrupteurs, allumage . . . . . LG 942–945
Interrupteurs, arrêt. . . . . LG 949
Interrupteurs, démarreur . . . . . LG 942–945
Interrupteurs, interdiction . . . . . LG 947–948
Interrupteurs, PDF . . . . . LG 946–947
Interrupteurs, sécurité . . . . . LG 947–948
Isolateur, borne de batterie . . . . . LG 743
Isolateur, carburateur Honda . . . . . LG 601


## J


J-B Weld. . . . . SFS 97
Jacobsen, barres de raclage pour souffleuse à neige. . . . . LG 848
Jacobsen, lames . . . . . LG 476–482
Jacobsen, lames de coupe-bordures. . . . . LG 585
Jacobsen, roulements . . . . . LG 226–237
Jacobsen, vis de cisaillement pour souffleuse à neige . . . . . LG 852–853
Jambières-tablier . . . . . SFS 114
Jambières-tablier . . . . . SFS 114
Jambières-tablier enveloppant . . . . . SFS 114
Jauge d'épaisseur . . . . . SFS 65
Jauge graduée, Honda . . . . . LG 756
Jauge, d'épaisseur . . . . . SFS 65
Jeu d'adaptateurs, riveteuse pas de 3/4 po . . . . . SFS 47
Jeu de clés Allen, poignée en T . . . . . SFS 66
Jeu de poinçons, goupille cylindrique . . . . . SFS 67
John Deere, applications de guide et chaîne . . . . . FOR 47–49
John Deere, applications de pignon. . . . . FOR 194
John Deere, arbres . . . . . LG 891–893
John Deere, bagues . . . . . LG 237–238
John Deere, bagues pour souffleuse à neige. . . . . LG 854
John Deere, barres de raclage pour souffleuse à neige. . . . . LG 847–848
John Deere, câbles de commande . . . . . LG 709
John Deere, courroies . . . . . LG 292–297
John Deere, embrayages à prise de force électrique . . . . . LG 733–741
John Deere, filtres de conduite de carburant. . . . . LG 774–776
John Deere, interrupteurs d'allumage . . . . . LG 942–945
John Deere, interrupteurs de prise de force . . . . . LG 946–947
John Deere, interrupteurs de sécurité . . . . . LG 947–948
John Deere, joints à rotule . . . . . LG 938–939
John Deere, lames . . . . . LG 482–493
John Deere, lames de coupe-bordures . . . . . LG 585
John Deere, patins pour souffleuse à neige . . . . . LG 850
John Deere, poulies de tension . . . . . LG 829–831
John Deere, régulateurs de tension. . . . . LG 731–732
John Deere, roues . . . . . LG 1029–1046
John Deere, roues anti-crevaison semi-pneumatiques. . . . . LG 1044–1046
John Deere, roues/roulettes anti-bascule . . . . . LG 1037–1042
John Deere, roulements . . . . . LG 237–238
John Deere, roulements pour souffleuse à neige . . . . . LG 854
John Deere, vis de cisaillement pour souffleuse à neige . . . . . LG 852–853
Joint d'admission, moteurs 2 temps . . . . . LG 621
Joint d'étanchéité, Troy-Bilt . . . . . LG 954
Joint étanche à l'huile, Tecumseh. . . . . LG 759
Joint étanchéité à l'huile, Troy-Bilt . . . . . LG 954
Joint racleur. . . . . LG 760
Joint statique de cuve de carburateur . . . . . LG 626–627
Joint statique de cuve de carburateur, Honda . . . . . LG 626–627
Joint statique de cuve de carburateur, Lawn-Boy . . . . . LG 626–627
Joint statique de cuve de carburateur, Oregon® . . . . . LG 626–627
Joint statique de cuve de carburateur, Walbro. . . . . LG 627
Joint statique, Kohler . . . . . LG 757
Joint statique, Tecumseh . . . . . LG 758–759
Joints à rotule. . . . . LG 938–939
Joints d'arbre . . . . . LG 910
Joints d'étanchéité, arbres. . . . . LG 910
Joints d'étanchéité, Briggs & Stratton . . . . . LG 749
Joints d'étanchéité, Honda. . . . . LG 756
Joints étanches à l'huile, Briggs & Stratton . . . . . LG 749
Joints étanches à l'huile, Honda. . . . . LG 756
Joints statiques de cuve . . . . . LG 626–627
Joints statiques de cuve de carburateur, Briggs & Stratton . . . . . LG 627
Joints statiques de cuve, Briggs & Stratton . . . . . LG 627
Joints statiques de cuve, Honda. . . . . LG 626–627
Joints statiques de cuve, Lawn-Boy . . . . . LG 626–627
Joints statiques de cuve, Oregon® . . . . . LG 626–627
Joints statiques de cuve, Walbro . . . . . LG 627
Joints statiques, Briggs & Stratton . . . . . LG 745–749
Joints statiques, d'admission moteur 2 temps. . . . . LG 621
Joints statiques, d'admission moteur 2 temps assortiment . . . . . SFS 103
Joints statiques, Honda . . . . . LG 751–753
Joints toriques, assortiment . . . . . SFS 102
Jonsered, applications de guide et chaîne . . . . . FOR 50–55
Jonsered, applications de pignon . . . . . FOR 194–195
Jonsered, ressorts de démarreur manuel . . . . . LG 937


## K


K&S, bagues. . . . . LG 238
K&S, roulements . . . . . LG 238
Kawasaki, bouchons de réservoir de carburant . . . . . LG 772
Kawasaki, filtres à air, mousse . . . . . LG 201–203
Kawasaki, filtres à air, papier . . . . . LG 198–201
Kawasaki, filtres à huile . . . . . LG 814–819
Kawasaki, filtres de conduite de carburant . . . . . LG 774–776
Kawasaki, lames de coupe-bordures. . . . . LG 585
Kawasaki, lanceurs . . . . . LG 924
Kawasaki, moteurs de démarreur . . . . . LG 917–918
Kawasaki, poires d'amorçage . . . . . LG 630
Kawasaki, poulies de démarreur manuel . . . . . LG 935
Kawasaki, régulateurs de tension . . . . . LG 732
Kawasaki, ressorts de démarreur manuel. . . . . LG 937
Kees, courroies . . . . . LG 297
Kees, lames. . . . . LG 494–497
King Kutter, courroies . . . . . LG 298
King Kutter, lames . . . . . LG 497
King Kutter, roues anti-crevaison semi-pneumatiques. . . . . LG 1044–1046
Kobalt, applications de guide et chaîne. . . . . FOR 55
Kohler, bobines d'allumage . . . . . LG 784–787
Kohler, engrenages de démarreur électrique . . . . . LG 928
Kohler, ensemble de joints statiques . . . . . LG 757
Kohler, filtres à air en mousse. . . . . LG 206–207
Kohler, filtres à air en papier . . . . . LG 203–206
Kohler, filtres à huile . . . . . LG 814–819
Kohler, filtres de conduite de carburant . . . . . LG 774–776
Kohler, interrupteurs d'allumage . . . . . LG 942–945
Kohler, joint statique . . . . . LG 757
Kohler, moteurs de démarreur . . . . . LG 918–919
Kohler, plots et condensateur . . . . . LG 789
Kohler, régulateurs de tension . . . . . LG 732

Kohler, ressorts de démarreur manuel . . . . . LG 937
Kohler, silencieux . . . . . LG 808–809
Kohler, trousses de carburateur . . . . . LG 605
Komatsu, démarreurs manuels . . . . . LG 924
Kubota, courroies . . . . . LG 298–299
Kubota, filtres à air . . . . . LG 208
Kubota, filtres de conduite de carburant . . . . . LG 774–776
Kubota, interrupteurs de prise de force . . . . . LG 946–947
Kubota, interrupteurs de sécurité . . . . . LG 947–948
Kubota, lames . . . . . LG 497–501
Kubota, roues/roulettes anti-bascule . . . . . LG 1037–1042

## L

Lames - Billy Goat . . . . . LG 590
Lames - Redhawk . . . . . LG 534–535
Lames de binage . . . . . LG 368
**LAMES DE COUPE-BORDURES . . . . . LG 584–590**
Lames de coupe-bordures par longueur, tableau . . . . . LG 589
Lames de coupe-bordures, Ariens . . . . . LG 584
Lames de coupe-bordures, Black & Decker . . . . . LG 584
Lames de coupe-bordures, Earth Quake . . . . . LG 584
Lames de coupe-bordures, Echo . . . . . LG 584
Lames de coupe-bordures, Homelite . . . . . LG 584
Lames de coupe-bordures, Husqvarna . . . . . LG 585
Lames de coupe-bordures, Jacobesn . . . . . LG 585
Lames de coupe-bordures, John Deere . . . . . LG 585
Lames de coupe-bordures, Kawasaki . . . . . LG 585
Lames de coupe-bordures, Lawn-Boy . . . . . LG 585
Lames de coupe-bordures, Lesco . . . . . LG 585
Lames de coupe-bordures, Little Wonder . . . . . LG 585
Lames de coupe-bordures, Maruyama . . . . . LG 586
Lames de coupe-bordures, McClane . . . . . LG 586
Lames de coupe-bordures, McCulloch . . . . . LG 586
Lames de coupe-bordures, MTD . . . . . LG 586
Lames de coupe-bordures, Power Trim . . . . . LG 586
Lames de coupe-bordures, RedMax . . . . . LG 587
Lames de coupe-bordures, Ryobi . . . . . LG 587
Lames de coupe-bordures, Sears . . . . . LG 587
Lames de coupe-bordures, Shindaiwa . . . . . LG 587
Lames de coupe-bordures, Stihl . . . . . LG 587
Lames de coupe-bordures, Tanaka . . . . . LG 588
Lames de coupe-bordures, Troy-Bilt . . . . . LG 588
Lames de coupe-bordures, Weed Eater . . . . . LG 588
Lames de coupe-borduress, universelles . . . . . LG 588–589
Lames de débroussaillage . . . . . LG 1014
Lames de débroussaillage, outils de limage . . . . . LG 1015
Lames de déchaumage . . . . . LG 368
Lames de scie d'éclaircissage . . . . . LG 1014
**LAMES DE TAILLE-HAIES . . . . . LG 783**
Lames par longueur, tableau . . . . . LG 350–366
Lames, Allis-Chalmers . . . . . LG 369
Lames, Ariens . . . . . LG 369–374
Lames, AYP . . . . . LG 374–382
Lames, Befco . . . . . LG 382
Lames, Better Outdoors . . . . . LG 383
Lames, Big Bee . . . . . LG 384
Lames, binage . . . . . LG 368
Lames, Bluebird . . . . . LG 590
Lames, Bobcat . . . . . LG 384–388
Lames, Bolens . . . . . LG 388–390
Lames, Bunton . . . . . LG 390–392
Lames, Bush Hog . . . . . LG 392–394
Lames, Caroni . . . . . LG 395
Lames, Country Clipper . . . . . LG 395–397
Lames, coupe-bordures . . . . . LG 584–590
Lames, Craftsman . . . . . LG 397–404
Lames, Cub Cadet . . . . . LG 404–412
Lames, de rechange identiques d'origine . . . . . LG 369–583
Lames, débroussailleuse . . . . . LG 1014
Lames, débroussailleuse et coupe-herbe . . . . . LG 1014
Lames, déchaumage . . . . . LG 368
Lames, Dixie Chopper . . . . . LG 413–416
Lames, Dixon . . . . . LG 416–428
Lames, DR . . . . . LG 428–430
Lames, DR . . . . . LG 428–430
Lames, Dynamow . . . . . LG 430
Lames, Encore . . . . . LG 431–434
Lames, Everide . . . . . LG 434
Lames, Excel . . . . . LG 470–475
Lames, Exmark . . . . . LG 434–443
Lames, Ferris . . . . . LG 443–446
Lames, Ford/New Holland . . . . . LG 447
Lames, Giant Vac . . . . . LG 447–448
Lames, Goodall . . . . . LG 390–392
Lames, Grasshopper . . . . . LG 448–450
Lames, Gravely . . . . . LG 450–456
Lames, Great Dane . . . . . LG 456–457
Lames, guide-chaînes pour scies à chaîne . . . . . FOR 148–179
Lames, Honda . . . . . LG 457–458
Lames, Huskee . . . . . LG 458
Lames, Husqvarna . . . . . LG 458–470
Lames, Hustler . . . . . LG 470–475
Lames, Ingersoll . . . . . LG 475
Lames, Jacobsen . . . . . LG 476–482
Lames, John Deere . . . . . LG 482–493
Lames, Kees . . . . . LG 494–497
Lames, King Kutter . . . . . LG 497
Lames, Kubota . . . . . LG 497–501
Lames, Land Pride . . . . . LG 501–503
Lames, Lastec . . . . . LG 503–504
Lames, Lawn Boy . . . . . LG 505
Lames, Lesco . . . . . LG 505–508
Lames, Massey Ferguson . . . . . LG 508–511
Lames, MTD . . . . . LG 512–521
Lames, Murray . . . . . LG 522–528
Lames, Poulan . . . . . LG 529–533
Lames, Poulan Pro . . . . . LG 311
Lames, Power Trim . . . . . LG 586
Lames, Scag . . . . . LG 535–537
Lames, scie d'éclaircissage de débroussailleuse . . . . . LG 1014
Lames, Scotts . . . . . LG 537–539
Lames, Simplicity . . . . . LG 539–545
Lames, Snapper . . . . . LG 545–556
Lames, Spartan . . . . . LG 557
Lames, Steiner . . . . . LG 557–558
Lames, Sutech . . . . . LG 559
Lames, Swisher . . . . . LG 559
Lames, taille-haie . . . . . LG 783
Lames, tondeuse à gazon . . . . . LG 369–583
Lames, Toro . . . . . LG 560–573
Lames, Troy-Bilt . . . . . LG 573–576
Lames, universelles . . . . . LG 368
Lames, Walker . . . . . LG 576
Lames, Woods . . . . . LG 577–579
Lames, Wright Stander . . . . . LG 579–582
Lames, Zipper . . . . . LG 583
Lampe baladeuse, WL275 Oregon® 40 V MAX sans fil . . . . . OPE 22
Lampe baladeuse, WL275 Oregon®, 40 V MAX sans fil . . . . . OPE 22
Land Pride, lames . . . . . LG 501–503
Lastec, lames . . . . . LG 503–504
Lawn-Boy, bobines d'allumage . . . . . LG 784–787
Lawn-Boy, courroies . . . . . LG 299
Lawn-Boy, filtres à air . . . . . LG 209
Lawn-Boy, lames . . . . . LG 505
Lawn-Boy, lames de coupe-bordures . . . . . LG 585
Lawn-Boy, pointeaux d'admission du carburateur . . . . . LG 629
Lawn-Boy, roues . . . . . LG 1029–1046
Lawn-Boy, roulements . . . . . LG 238–239
Lawn-Boy, trousses de carburateur . . . . . LG 606
Lawn-Chief, arbres . . . . . LG 869
Lesco, courroies . . . . . LG 299
Lesco, lames . . . . . LG 505–508
Lesco, lames de coupe-bordures . . . . . LG 585
Levier d'abattage . . . . . SFS 18
Levier, abattage . . . . . SFS 18
Lime de rechange, dresseur de guide et chaîne de scie à chaîne . . . . . SFS 13
Lingettes pour les mains, Wypall préhumectées . . . . . SFS 68
Liquide d'allumage en aérosol . . . . . SFS 93–94
Liquide d'allumage en aérosol . . . . . SFS 93–94
**LISTES DE PIÈCES ILLUSTRÉES . . . . . LG 40–175**
Little Wonder, courroies . . . . . LG 300
Little Wonder, lames de coupe-bordures . . . . . LG 585
Little Wonder, roulements . . . . . LG 239
Lubrifiant pour engrenages, "0" . . . . . SFS 92
Lubrifiant pour engrenages, "00" . . . . . SFS 92
Lubrifiant pour engrenages, 80-90 WT . . . . . SFS 92
Lubrifiant utilisé pour monter le pneu sur la jante . . . . . SFS 68
Lubrifiant, engrenage, "0" . . . . . SFS 92
Lubrifiant, engrenage, "00" . . . . . SFS 92
Lubrifiant, engrenage, 80-90 WT . . . . . SFS 92
Lubrifiant, pénétrant . . . . . SFS 93

# 2019 Index Alphabétique – FR


Lubrifiant, talon . . . SFS 68
Lubrifiants, graisse, nettoyants, solvants et colles . . . SFS 92–98
Lunettes de protection . . . SFS 117–119
Lunettes de sécurité . . . SFS 117–119
Lunettes, de sécurité . . . SFS 117–119
Lunettes, protection . . . SFS 117–119
Lunettes, sécurité . . . SFS 117–119


## M


Machine à changer les pneus . . . SFS 69
**MAGASIN DE DÉTAIL . . . SFS 4–23**
Makita, applications de guide et chaîne . . . FOR 56–59
Makita, applications de pignon . . . FOR 196
Manilles . . . LG 793
Maruyama, applications de guide et chaîne . . . FOR 59
Maruyama, bouchons de réservoir de carburant . . . LG 772
Maruyama, filtres à air . . . LG 209
Maruyama, lames de coupe-bordures . . . LG 586
Maruyama, pièces de taille-bordures et de souffleur . . . LG 1020–1021
Masques respiratoires jetables . . . SFS 120
Masques respiratoires, jetables . . . SFS 120
Masques, respiratoires jetables . . . SFS 120
Massey Fergunson, courroies . . . LG 300
Massey Fergunson, lames . . . LG 508–511
Mastercraft, applications de pignon . . . FOR 196
McClane, câbles de commande . . . LG 709
McClane, courroies . . . LG 300
McClane, roulements . . . LG 239
McCulloch, applications de guide et chaîne . . . FOR 60–62
McCulloch, applications de pignon . . . FOR 196–197
McCulloch, filtres à air . . . LG 209
McCulloch, lames de coupe-bordures . . . LG 586
McCulloch, pièces de taille-bordures et de souffleur . . . LG 1021
McLane, lames de coupe-bordures . . . LG 586
Meule, affûteuse de chaîne . . . LG 687
Meules de 4 1/8 po, affûteuses de chaîne coupante . . . SFS 41
Meules de 5 3/4 po, affûteuses de chaîne coupante . . . SFS 40
Meules en pierre, lames de tondeuses à gazon . . . SFS 59–61
Meules pour affûteuse à chaîne . . . LG 687
Meuleuses à ruban, lames de tondeuse à gazon . . . SFS 58–59
Mitsubishi, démarreurs manuels . . . LG 924
Mitsubishi, filtres à air . . . LG 210
Mitsubishi, poulies de démarreur manuel . . . LG 935
Module d'allumage universel . . . LG 789
Module d'allumage, universel . . . LG 789
Montgomery Ward, applications de pignon . . . FOR 197
Moteur de roue, entraînement hydrostatique . . . LG 697
Moteur-roue hydrostatique . . . LG 696
Moteur, Only One™ 2 temps . . . SFS 19
MTD, adaptateurs de lame . . . LG 340–341
MTD, amorceur de souffleuse à neige . . . LG 860
MTD, arbre de direction . . . LG 940
MTD, arbres . . . LG 893–901
MTD, bagues . . . LG 239–242
MTD, bagues pour souffleuse à neige . . . LG 854–855
MTD, bouchons de réservoir de carburant . . . LG 772
MTD, bras de direction . . . LG 939
MTD, bride de goulotte pour souffleuse à neige . . . LG 855
MTD, câbles de commande . . . LG 710–715
MTD, câbles de commande pour souffleuse à neige . . . LG 856–859
MTD, came de blocage de l'embrayage pour souffleuse à neige . . . LG 856
MTD, clé d'allumage pour souffleuse à neige . . . LG 861
MTD, courroies . . . LG 300–306
MTD, déclencheur de commande de direction pour souffleuse à neige . . . LG 856
MTD, démarreurs 120 V pour souffleuse à neige . . . LG 861
MTD, démarreurs manuels . . . LG 925
MTD, démarreurs manuels pour souffleuse à neige . . . LG 860–861
MTD, disques d'entraînement . . . LG 726
MTD, embrayages à prise de force électrique . . . LG 733–741
MTD, engrenage à vis sans fin en bronze pour souffleuse à neige . . . LG 856
MTD, essieux . . . LG 938
MTD, filtres à air . . . LG 210
MTD, garde-courroie . . . LG 802
MTD, guide de câble d'inclinaison de goulotte de souffleuse à neige . . . LG 856
MTD, interrupteurs d'allumage . . . LG 942–945
MTD, interrupteurs de prise de force . . . LG 946–947
MTD, interrupteurs de sécurité . . . LG 947–948
MTD, joints à rotule . . . LG 938–939
MTD, lame de frein . . . LG 802
MTD, lames . . . LG 512–521
MTD, lames de coupe-bordures . . . LG 586
MTD, moteurs de démarreur . . . LG 921
MTD, pales de souffleuse à neige . . . LG 846
MTD, patins de souffleuse à neige . . . LG 850
MTD, pièces de taille-bordures et de souffleur . . . LG 1021–1022
MTD, pignon de direction . . . LG 941
MTD, plaques de raclage pour souffleuse à neige . . . LG 848–849
MTD, plaquette frein pour souffleuse à neige . . . LG 856
MTD, poires d'amorçage . . . LG 630
MTD, poulies d'entraînement . . . LG 837–838
MTD, poulies de démarreur manuel . . . LG 935
MTD, poulies de tension . . . LG 831–832
MTD, roue de souffleuse à neige . . . LG 856
MTD, roues . . . LG 1029–1046
MTD, roues/roulettes anti-bascule . . . LG 1037–1042
MTD, roulements . . . LG 239–242
MTD, roulements pour souffleuse à neige . . . LG 854–855
MTD, sangles de verrouillage de capot de tondeuse . . . LG 803
MTD, solénoïdes de démarreur . . . LG 730
MTD, trousse avec carburateur pour souffleuse à neige . . . LG 859
MTD, trousses de carburateur . . . LG 606
MTD, vis de cisaillement pour souffleuse à neige . . . LG 852–853
MTD, vis sans fin pour souffleuse à neige . . . LG 846
Murray, adaptateurs de lame . . . LG 342
Murray, arbres . . . LG 902
Murray, articulations de direction . . . LG 939
Murray, bagues . . . LG 242–243
Murray, câbles de commande . . . LG 715–717
Murray, courroies . . . LG 306–309
Murray, interrupteurs d'allumage . . . LG 942–945
Murray, joints à rotule . . . LG 938–939
Murray, lames . . . LG 522–528
Murray, patins de souffleuse à neige . . . LG 850
Murray, poulies d'entraînement . . . LG 838–839
Murray, poulies de tension . . . LG 832–833
Murray, roues . . . LG 1029–1046
Murray, roues/roulettes anti-bascule . . . LG 1037–1042
Murray, roulements . . . LG 242–243
Murray, silencieux . . . LG 809
Murray, tige d'entraînement . . . LG 939
Murray, trousse de boîtier de direction . . . LG 941
Murray, vis de cisaillement pour souffleuse à neige . . . LG 852–853


## N


Nettoyant de carburateur en aérosol . . . SFS 93
Nettoyant pour carburateur, aérosol . . . SFS 93
Nettoyant pour freins en aérosol . . . SFS 94
Nettoyant pour les mains Fast Orange . . . SFS 91
Nettoyant pour les mains, Fast Orange . . . SFS 91
Noma, arbres . . . LG 869
Noma, bagues . . . LG 243
Noma, courroies . . . LG 309–310
Noma, roues . . . LG 1029–1046
Noma, roulements . . . LG 243
Noma, vis de cisaillement pour souffleuse à neige . . . LG 852–853


## O


Oeillet, raccord de réservoir de carburant . . . LG 767
Oeillets de système de carburant . . . LG 763–764
OEM, poulies d'entraînement de rechange . . . LG 834–840
OEM, poulies de tension de rechange . . . LG 824–834
Oil-Dri, absorbant . . . SFS 68
Oleo-Mac, filtres à air . . . LG 210
Olympyk (Oleo-Mac), applications de guide et chaîne . . . FOR 62–64
Olympyk (Oleo-Mac), applications de pignon . . . FOR 197
Onan, filtres à air . . . LG 211
Onan, moteurs de démarreur . . . LG 921
Onan, régulateurs de tension . . . LG 732
Only One™ huile pour moteur 2 temps . . . SFS 19
OPE, accessoires . . . OPE 23
OPE, chaîne PowerSharp® . . . OPE 25
OPE, pièces de rechange . . . OPE 25
Oregon, applications de pignon . . . FOR 197
Oregon, fendeuses de bûches . . . OPE 38–47
Oregon®, catalogue . . . SFS 23

Oregon®, conduit d'essence . . . LG 761
Oregon®, flotteurs de carburateur . . . LG 624–625
Oregon®, gonfleur de positionneur de talon . . . SFS 70
Oregon®, limes plates, chaîne coupante . . . SFS 8
Oregon®, limes rondes, chaîne coupante. . . . SFS 7–8
Oregon®, machine à changer les pneus . . . SFS 69
Oregon®, pointeaux d'admission du carburateur . . . LG 629
Oregon®, présentoirs de gouges de chaîne coupante . . . SFS 23
Oregon®, roulements à billes Magnum . . . LG 224
Oregon®, sélection de produits . . . FOR 4
Oregon®, système d'outils sans fil, applications de guide et chaîne . . . FOR 64
Oregon®, trousses de carburateur . . . LG 606–608
Oregon®. tableau de classification des scies à chaîne . . . FOR 3
Outil de mesure de courroie . . . LG 331
Outil de mise à niveau du plateau de coupe, tondeuses à gazon . . . SFS 64
Outil de nettoyage de rainure, guide de scie à chaîne . . . SFS 14
Outil de pliage du câble d'accélérateur . . . LG 722
Outil de pliage en Z du câble d'accélérateur . . . SFS 66
Outil de rectifications des soupapes . . . SFS 66
Outil de réparation de tige de soupape, 4 manières . . . SFS 68
Outil de repêchage de tige de soupape . . . SFS 68
Outil pneumatique, huile . . . SFS 83
**OUTILS D'ATELIER . . . SFS 24–71**
Outils de dressage de meule, affûteuses de chaîne coupante . . . SFS 41
Outils de dressage, meules d'affûteuse de chaîne coupante . . . SFS 41
Outils de formation, chaîne coupante. . . . SFS 23
Outils de jauge de profondeur, chaîne coupante . . . SFS 8
Outils de limage pour lames de débroussailleuse. . . . LG 1015
Outils pour pneu . . . SFS 69
Outils, atelier . . . SFS 24–71

## P

Pales, souffleuses à neige. . . . LG 846–847
Palettes antidéversement . . . SFS 89
Palettes, anti-déversement . . . SFS 89
Paliers à embout . . . LG 804
Partner, applications de guide et chaîne . . . FOR 65–66
Partner, applications de pignon . . . FOR 197–198
Partner, courroies . . . LG 310
Partner, filtres à air. . . . LG 211
Pastilles d'obturation. . . . LG 632–633
Pastilles d'obturation de carburateur. . . . LG 632–633
Patins universels pour souffleuse à neige . . . LG 849
Patins, souffleuses à neige . . . LG 849–851
Pénétrant, lubrifiant . . . SFS 93
Permatex, adhésif frein-filet . . . SFS 96
Permatex, produit d'étanchéité . . . SFS 96
Pics de levage de grume . . . SFS 18
Pics de levage, grumes . . . SFS 18
**PIÈCES COMMERCIALES . . . LG 694–698**
**PIÈCES D'ALLUMAGE . . . LG 784–790**
**PIÈCES D'ENTRAÎNEMENT. . . . LG 724–728**
Pièces de convertisseur de couple . . . LG 675
**PIÈCES DE DÉMARREUR . . . LG 926–936**
Pièces de démarreur manuel . . . LG 929–930
**PIÈCES DE DIRECTION . . . LG 938–941**
**PIÈCES DE MOTEUR . . . LG 745–760**
Pièces de rechange pour affûteuses et dérive-chaînes de fin de série . . . SFS 48–57
Pièces de rechange, affûteuses de lame de tondeuse à gazon. . . . SFS 62
**PIÈCES DE ROTOCULTEUR . . . LG 954**
**PIÈCES DE ROULEAU DE CHAÎNE . . . LG 676**
Pièces de roulette . . . LG 694–695
**PIÈCES DE SCIE À CHAÎNE ET DE SCIE À TRONÇONNER . . . LG 677–693**
**PIÈCES DE SOUFFLEUSES À NEIGE . . . LG 846–863**
**PIÈCES DE TAILLE-BORDURES ET DE SOUFFLEUSE . . . LG 1016–1027**
Pièces de taille-bordures et de souffleuse, Echo . . . LG 1016–1018
Pièces de taille-bordures et de souffleuse, Homelite . . . LG 1019
Pièces de taille-bordures et de souffleuse, Husqvarna. . . . LG 1020
Pièces de taille-bordures et de souffleuse, Maruyama . . . LG 1020–1021
Pièces de taille-bordures et de souffleuse, McCulloch . . . LG 1021
Pièces de taille-bordures et de souffleuse, MTD . . . LG 1021–1022
Pièces de taille-bordures et de souffleuse, RedMax . . . LG 1022
Pièces de taille-bordures et de souffleuse, Ryan . . . LG 1022–1023
Pièces de taille-bordures et de souffleuse, Ryobi. . . . LG 1022–1023
Pièces de taille-bordures et de souffleuse, Shindaiwa . . . LG 1023–1024
Pièces de taille-bordures et de souffleuse, Snapper . . . LG 1024
Pièces de taille-bordures et de souffleuse, Stihl . . . LG 1024–1026
Pièces de taille-bordures et de souffleuse, Tanaka . . . LG 1026
Pièces de taille-bordures et de souffleuse, Weed Eater . . . LG 1027
**PIÈCES DIVERSES . . . LG 802–805**
**PIÈCES ÉLECTRIQUES . . . LG 729–744**
Pièces électriques, scies à chaîne . . . LG 684–686
Pièces électriques, scies à tronçonner . . . LG 684–686
Pièces pour affûteuses, riveteuses et dérive-chaînes de fin de série . . . SFS 48–57
Pièces pour la suspension de la tondeuse . . . LG 804
Pierres d'affûtage, affûteuses de chaîne coupante portatives . . . SFS 12
Pignon de direction, MTD . . . LG 941
Pignon, plaque d'acier . . . LG 725
Pignon, tendeur . . . LG 725
**PIGNONS – SCIE À CHAÎNE. . . . FOR 180–210**
Pignons d'acier . . . LG 725
Pignons d'entraînement, scies à chaîne . . . FOR 180–210
Pignons tendeurs . . . LG 725
Pince de court-circuitage de bougie d'allumage. . . . LG 867
Pince de court-circuitage, bougie d'allumage . . . LG 867
Pince hémostatique . . . SFS 65
Pinces de câble d'accélérateur . . . LG 722
Pinces de levage de grume . . . SFS 18
Pinces de levage, grumes . . . SFS 18
Pioneer, applications de guide et chaîne . . . FOR 67–68
Pioneer, applications de pignon . . . FOR 198
Pistolet graisseur jetable . . . SFS 12–13
Pistolet graisseur jetable . . . SFS 12–13
Pistolet graisseur, guides de scie à chaîne. . . . SFS 12–13
Pistolet graisseur, jetables . . . SFS 12–13
Piston, Honda . . . LG 754
Plaques de raclage, souffleuses à neige . . . LG 847–849
Plateformes antidéversement. . . . SFS 89
Plates-formes, anti-déversement . . . SFS 89
Plots et condensateur, Briggs & Stratton. . . . LG 789
Plots et condensateur, Kohler . . . LG 789
Plots et condensateur, Tecumseh . . . LG 789
Pneus, anti-crevaison en mousse rigide . . . LG 964
Pneus, bande de roulement à barrettes . . . LG 958
Pneus, bande de roulement à chevrons . . . LG 959
Pneus, bande de roulement à crampons . . . LG 957
Pneus, bande de roulement à nervure pour terrains de golf . . . LG 959
Pneus, bande de roulement à rainure droite . . . LG 960
Pneus, bande de roulement All Trail II . . . LG 964
Pneus, bande de roulement AT100 . . . LG 958
Pneus, bande de roulement AT489 . . . LG 964
Pneus, bande de roulement chevrons à barrettes. . . . LG 958
Pneus, bande de roulement en dent de scie . . . LG 961
Pneus, bande de roulement lisse . . . LG 960
Pneus, bande de roulement magnum. . . . LG 962
Pneus, bande de roulement Polar Trac . . . LG 958
Pneus, bande de roulement pour chariots de golf . . . LG 963
Pneus, bande de roulement pour gazon . . . LG 959
Pneus, bande de roulement pour terrains de golf . . . LG 963
Pneus, bande de roulement Power Trac . . . LG 958
Pneus, bande de roulement Scorpion. . . . LG 963
Pneus, bande de roulement Super Lug . . . LG 958
Pneus, bande de roulement Super Turf . . . LG 962
Pneus, bande de roulement Tital . . . LG 958
Pneus, bande de roulement Tru Power . . . LG 958
Pneus, bande de roulement Turf CTR . . . LG 963
Pneus, bande de roulement Turf Master . . . LG 961
Pneus, bande de roulement Turf Mate . . . LG 963
Pneus, bande de roulement Turf Saver . . . LG 959
Pneus, bande de roulement Turf Saver II . . . LG 960
Pneus, bande de roulement Turf Smart. . . . LG 962
Pneus, bande de roulement X-Trac . . . LG 958
Pneus, bande roulement Snow Hog. . . . LG 958
Pneus, bande roulement souffleuse à neige . . . LG 958
**PNEUS, CHAMBRES À AIR ET CHAÎNES DE PNEU . . . LG 955–965**
Pneus, enveloppe. . . . LG 964
Pneus, nervure brouette . . . LG 957
Pneus, relief agricole. . . . LG 958
Pneus, remorque grande vitesse . . . LG 960
Pneus, VTT à crampons . . . LG 963
Poignée de démarrage de souffleuse à neige pour mitaines . . . LG 851
Poignées de démarreur manuel. . . . LG 929–930
Poignées de lime, chaîne coupante . . . SFS 9
Poignées, démarreurs manuels. . . . LG 929–930
Point d'achat de matériel de soutien . . . SFS 4–6, 21–23
Pointeaux . . . LG 628–629
Pointeaux d'admission . . . LG 628–629
Pointeaux d'admission de carburateur . . . LG 628–629
Pointeaux de flotteur . . . LG 628–629
Poires d'amorçage, scies à chaîne . . . LG 690
Poires d'amorçage . . . LG 629–632

# 2019 Index Alphabétique – FR


Polaris, courroies VTT . . . LG 310
Pommeau de levier de vitesses . . . LG 805
Pommeau, levier de vitesse . . . LG 805
Pompe à carburant . . . LG 767
Pompe, à carburant . . . LG 767
Portant à ceinture . . . LG 331
Porte-crayon de marquage . . . SFS 19
Porte-fusibles . . . LG 742
Porte-lames . . . LG 340–342
Poulan / Poulan Pro, applications de guide et chaîne . . . FOR 68–73
Poulan / Poulan Pro, applications de pignon . . . FOR 198–200
Poulan Pro, courroies . . . LG 311
Poulan, filtres à air . . . LG 211–212
Poulan, lames . . . LG 529–533
Poulan, poires d'amorçage . . . LG 630
**POULIES . . . LG 821–841**
Poulies d'entraînement . . . LG 834–840
Poulies d'entraînement, AYP . . . LG 834
Poulies d'entraînement, Bobcat . . . LG 835
Poulies d'entraînement, Cub Cadet . . . LG 837
Poulies d'entraînement, Exmark . . . LG 836
Poulies d'entraînement, MTD . . . LG 837–838
Poulies d'entraînement, Murray . . . LG 838–839
Poulies d'entraînement, power-trim . . . LG 839
Poulies d'entraînement, Scag . . . LG 839–840
Poulies d'entraînement, Snapper . . . LG 840
Poulies d'entraînement par grosseur, tableau . . . LG 841
Poulies d'entraînement, rechange d'origine . . . LG 834–840
Poulies de démarreur manuel . . . LG 932–935
Poulies de démarreur manuel, Briggs & Stratton . . . LG 933
Poulies de démarreur manuel, Echo . . . LG 933
Poulies de démarreur manuel, Green Machine . . . LG 936
Poulies de démarreur manuel, Homelite . . . LG 934
Poulies de démarreur manuel, Honda . . . LG 934
Poulies de démarreur manuel, Husqvarna . . . LG 934
Poulies de démarreur manuel, Kawasaki . . . LG 935
Poulies de démarreur manuel, Mitsubishi . . . LG 935
Poulies de démarreur manuel, MTD . . . LG 935
Poulies de démarreur manuel, Ryan . . . LG 934–935
Poulies de démarreur manuel, Snapper . . . LG 936
Poulies de démarreur manuel, Stihl . . . LG 936
Poulies de démarreur manuel, Tecumseh . . . LG 936
Poulies de tension . . . LG 821–823
Poulies de tension par grosseur, tableau . . . LG 821–823
Poulies de tension, AMF . . . LG 824
Poulies de tension, AYP . . . LG 824–825
Poulies de tension, Bobcat . . . LG 825–826
Poulies de tension, Bunton . . . LG 826–827
Poulies de tension, Cub Cadet . . . LG 826–827
Poulies de tension, de rechange d'origine . . . LG 824–834
Poulies de tension, Dixie Chopper . . . LG 827
Poulies de tension, Excel . . . LG 827
Poulies de tension, Exmark . . . LG 827–828
Poulies de tension, Grasshopper . . . LG 828
Poulies de tension, Hustler . . . LG 827
Poulies de tension, John Deere . . . LG 829–831
Poulies de tension, MTD . . . LG 831–832
Poulies de tension, Murray . . . LG 832–833
Poulies de tension, Scag . . . LG 833
Poulies de tension, Toro . . . LG 834
Poulies, démarreurs manuels . . . LG 932–935
Poulies, entraînement . . . LG 834–840
Poulies, poulie tendeur . . . LG 824–834
Power Pruner / Echo Power Pruner, applications de guide et chaîne . . . FOR 73–74
Power Trim, courroies . . . LG 311
Power Trim, lames de coupe-bordures . . . LG 586
Power Trim, poulies d'entraînement . . . LG 839
Powerhorse, applications de guide et chaîne . . . FOR 74
PowerSharp®, chaîne de scie pour OPE . . . OPE 25
PowerSharp®, système d'affûtage de chaîne coupante . . . FOR 136–137
PowerSpout, carburants VP . . . SFS 81
Présentoir de point de vente, 120v Professional Series™ . . . OPE 37
Présentoir, lunettes de sécurité . . . SFS 20
Présentoirs de coupe-chaîne, chaîne coupante Oregon® . . . SFS 23
Présentoirs modulaires . . . SFS 4–6
Produit antifuite pour pneu, Slime® . . . SFS 98
Produit d'étanchéité, Permatex . . . SFS 95
Protecteur de pompe pour nettoyeur haute pression, atomiseur . . . SFS 98
Protecteur de pompe, nettoyeur haute pression, atomiseur . . . SFS 98
Protecteurs d'oreilles, sécurité auditive . . . SFS 121
PS250, guide-chaîne . . . OPE 25
PS250, scie à long manche . . . OPE 20
Puissance d'entraînement par engrenages . . . OPE 20
**PULVÉRISATEURS . . . LG 911–912**
Pulvérisateurs à dos . . . LG 911


## R


Raccords d'essence . . . LG 765
Raccords, carburant . . . LG 765–766
Racleur, joint . . . LG 760
Rallonge EX600, accessoires multiples sans fil . . . OPE 12
Rampe Poly-RampMC . . . SFS 89
Rampe, Poly-Ramp . . . SFS 89
Rampes, tondeuses à gazon . . . SFS 64
Ransomes, roues anti-crevaison semi-pneumatiques . . . LG 1044–1046
Rectifieuse de soupape . . . SFS 67
Rectifieuse de soupapes . . . SFS 67
Red Hawk, lames . . . LG 534–535
RedMax, applications de guide et chaîne . . . FOR 74–76
RedMax, applications de pignon . . . FOR 200
RedMax, filtres à air . . . LG 212
RedMax, lames de coupe-bordures . . . LG 587
RedMax, pièces de taille-bordures et de souffleur . . . LG 1022
RedMax, ressorts de démarreur manuel . . . LG 937
Régulateurs de tension . . . LG 731–732
Régulateurs, tension . . . LG 731–732
Remington, applications de guide et chaîne . . . FOR 77–78
Remington, applications de pignon . . . FOR 200
Reniflard de système de carburant . . . LG 763–764
**RENSEIGNEMENTS DE L'ANSI . . . FOR 2–4**
Réservoirs à essence . . . LG 770
Réservoirs à essence, Honda . . . LG 770
Réservoirs, carburant . . . LG 770
**RESSORTS . . . LG 913–914**
Ressorts d'extension, assortiment . . . SFS 104
Ressorts de démarreur manuel . . . LG 937
Ressorts de démarreur manuel, Briggs & Stratton . . . LG 937
Ressorts de démarreur manuel, Dolmar . . . LG 937
Ressorts de démarreur manuel, Echo . . . LG 937
Ressorts de démarreur manuel, Green Machine . . . LG 937
Ressorts de démarreur manuel, Hoffco . . . LG 937
Ressorts de démarreur manuel, Homelite . . . LG 937
Ressorts de démarreur manuel, Honda . . . LG 937
Ressorts de démarreur manuel, Husqvarna . . . LG 937
Ressorts de démarreur manuel, Jonsered . . . LG 937
Ressorts de démarreur manuel, Kawasaki . . . LG 937
Ressorts de démarreur manuel, Kohler . . . LG 937
Ressorts de démarreur manuel, RedMax . . . LG 937
Ressorts de démarreur manuel, Robin . . . LG 937
Ressorts de démarreur manuel, Shindaiwa . . . LG 937
Ressorts de démarreur manuel, Stihl . . . LG 937
Ressorts de torsion, assortiment . . . SFS 104
Ressorts, démarreurs manuels . . . LG 937
Riveteuse d'établi pour chaîne coupante . . . SFS 44
Riveteuse de chaîne coupante à usage intensif . . . SFS 46
Riveteuse électrique compacte . . . SFS 42
Riveteuse, chaîne coupante, usage intensif . . . SFS 46
Riveteuse, électrique compacte . . . SFS 42
Robin, bobines d'allumage . . . LG 784–787
Robin, carburateurs . . . LG 596
Robin, démarreurs manuels . . . LG 925
Robin, ressorts de démarreur manuel . . . LG 937
Robinet de purge d'huile . . . LG 760
Robinets d'arrêt de conduit d'essence . . . LG 766–767
Robinets d'arrêt, conduit d'essence . . . LG 766–767
Rondelles . . . SFS 106
Rondelles cuvettes en acier . . . SFS 106
Rondelles en fibre . . . SFS 106
Rondelles plates en acier . . . SFS 106
Rondelles, acier plat . . . SFS 106
Rondelles, creuses en acier . . . SFS 106
Rondelles, fibre . . . SFS 106
Roper, arbres . . . LG 903–904
Roper, bagues . . . LG 227–228
Roper, courroies . . . LG 311–312
Roper, roulements . . . LG 227–228
**ROUES . . . LG 1029–1047**
Roues anti-crevaison semi-pneumatiques . . . LG 1044–1046
Roues de brouette . . . LG 1047
Roues pneumatiques . . . LG 1044–1046
Roues semi-pneumatiques universelles . . . LG 1029–1037

Roues semi-pneumatiques, AMF . . . LG 1029–1037
Roues semi-pneumatiques, AYP . . . LG 1029–1037
Roues semi-pneumatiques, Bobcat . . . LG 1029–1037
Roues semi-pneumatiques, Bunton . . . LG 1029–1037
Roues semi-pneumatiques, Honda . . . LG 1029–1037
Roues semi-pneumatiques, Husqvarna . . . LG 1029–1037
Roues semi-pneumatiques, John Deere . . . LG 1029–1037
Roues semi-pneumatiques, Lawn-Boy . . . LG 1029–1037
Roues semi-pneumatiques, MTD . . . LG 1029–1037
Roues semi-pneumatiques, Murray . . . LG 1029–1037
Roues semi-pneumatiques, Noma . . . LG 1029–1037
Roues semi-pneumatiques, Sears . . . LG 1029–1037
Roues semi-pneumatiques, Sensation . . . LG 1029–1037
Roues semi-pneumatiques, Snapper . . . LG 1029–1037
Roues semi-pneumatiques, Toro . . . LG 1029–1037
Roues, affûteuses pour scie à chaîne . . . SFS 40–41
Roues, AMF . . . LG 1029–1046
Roues, AYP . . . LG 1029–1046
Roues, Bobcat . . . LG 1029–1046
Roues, brouettes . . . LG 1047
Roues, Bunton . . . LG 1029–1046
Roues, Honda . . . LG 1029–1046
Roues, Husqvarna . . . LG 1029–1046
Roues, John Deere . . . LG 1029–1046
Roues, Lawn Boy . . . LG 1029–1046
Roues, MTD . . . LG 1029–1046
Roues, Murray . . . LG 1029–1046
Roues, Noma . . . LG 1029–1046
Roues, Sears . . . LG 1029–1046
Roues, semi-pneumatiques universelles . . . LG 1029–1037
Roues, Sensation . . . LG 1029–1046
Roues, Snapper . . . LG 1029–1046
Roues, Toro . . . LG 1029–1046
Roues/roulettes anti-bascule, AMF . . . LG 1037–1042
Roues/roulettes anti-bascule, AYP . . . LG 1037–1042
Roues/roulettes anti-bascule, Bobcat . . . LG 1037–1042
Roues/roulettes anti-bascule, Bolens . . . LG 1037–1042
Roues/roulettes anti-bascule, Cub Cadet . . . LG 1037–1042
Roues/roulettes anti-bascule, Exmark . . . LG 1037–1042
Roues/roulettes anti-bascule, Ferris . . . LG 1037–1042
Roues/roulettes anti-bascule, Grasshopper . . . LG 1037–1042
Roues/roulettes anti-bascule, Gravely . . . LG 1037–1042
Roues/roulettes anti-bascule, John Deere . . . LG 1037–1042
Roues/roulettes anti-bascule, Kubota . . . LG 1037–1042
Roues/roulettes anti-bascule, MTD . . . LG 1037–1042
Roues/roulettes anti-bascule, Murray . . . LG 1037–1042
Roues/roulettes anti-bascule, Scag . . . LG 1037–1042
Roues/roulettes anti-bascule, Toro . . . LG 1037–1042
Roues/roulettes anti-bascule, Wheel Horse . . . LG 1037–1042
Roulements - EHP . . . LG 227–228
Roulements - Sears . . . LG 227–228
Roulements à billes . . . LG 223–224
Roulements à rouleaux à cage . . . LG 223
Roulements à rouleaux coniques . . . LG 223
Roulements de roue . . . LG 223–224
Roulements de roue à boudin . . . LG 224
**ROULEMENTS ET BAGUES . . . LG 223–249**
Roulements, AMF . . . LG 243
Roulements, Ariens . . . LG 225–227
Roulements, AYP . . . LG 227–228
Roulements, billes . . . LG 223–224
Roulements, Bobcat . . . LG 228–230
Roulements, Bunton . . . LG 230
Roulements, Cub Cadet . . . LG 231-232
Roulements, Dixon . . . LG 232
Roulements, embout . . . LG 804
Roulements, Encore . . . LG 232
Roulements, Exmark . . . LG 233-234
Roulements, Ferris . . . LG 234
Roulements, Grasshopper . . . LG 234–235
Roulements, Gravely . . . LG 235
Roulements, Honda . . . LG 235
Roulements, Hustler . . . LG 236
Roulements, Jacobsen . . . LG 236–237
Roulements, John Deere . . . LG 237–238
Roulements, K&S . . . LG 238
Roulements, Lawn Boy . . . LG 238–239
Roulements, Little Wonder . . . LG 239
Roulements, McLane . . . LG 239
Roulements, MTD . . . LG 239–242
Roulements, Murray . . . LG 242–243
Roulements, Noma . . . LG 243
Roulements, Oregon® Magnum, bille . . . LG 224
Roulements, Roper . . . LG 227–228
Roulements, roue . . . LG 223–224
Roulements, roue à boudin . . . LG 224
Roulements, rouleau à cage . . . LG 223
Roulements, rouleau conique . . . LG 223
Roulements, Scag . . . LG 244
Roulements, Simplicity . . . LG 244–245
Roulements, Snapper . . . LG 245–246
Roulements, souffleuses à neige . . . LG 853–855
Roulements, Toro . . . LG 247
Roulements, Yazoo . . . LG 248
Ryan, pièces de taille-bordures et de souffleur . . . LG 1022–1023
Ryan, poulies de démarreur manuel . . . LG 934–935
Ryobi, applications de guide et chaîne . . . FOR 78–79
Ryobi, lames de coupe-bordures . . . LG 587
Ryobi, pièces de taille-bordures et de souffleur . . . LG 1022–1023


## S


Sac à outils . . . OPE 23
Sacs à dos de batterie, 120v Professional Series™ . . . OPE 36
**SACS À GAZON . . . LG 781–782**
Sacs à herbe . . . LG 781–782
Sangle de réservoir à essence, Scag . . . LG 698
Sangle de verrouillage, capots de tondeuse . . . LG 803
Sangles de verrouillage de capot de tondeuse . . . LG 803
Sans fil, tachymètre . . . SFS 67
Scag, arbres . . . LG 903
Scag, bagues . . . LG 244
Scag, bande de frein . . . LG 698
Scag, bouchons de réservoir de carburant . . . LG 772
Scag, câbles de commande . . . LG 717–718
Scag, courroies . . . LG 312–314
Scag, filtres de conduite de carburant . . . LG 774–776
Scag, interrupteurs de prise de force . . . LG 946–947
Scag, interrupteurs de sécurité . . . LG 947–948
Scag, joints à rotule . . . LG 938–939
Scag, lames . . . LG 535–537
Scag, poulies d'entraînement . . . LG 839–840
Scag, poulies de tension . . . LG 833
Scag, roues anti-crevaison semi-pneumatiques . . . LG 1044–1046
Scag, roues pneumatiques . . . LG 1044–1046
Scag, roues/roulettes anti-bascule . . . LG 1037–1042
Scag, roulements . . . LG 244
Scag, sangle de réservoir de carburant . . . LG 698
Scie à long manche à montage central . . . OPE 20
Scie à long manche PS600, accessoires multiples sans fil . . . OPE 12
Scie à tronçonner, courroies . . . LG 684
Scie à tronçonner, filtres à air . . . LG 678–684
Scie à tronçonner, pièces électriques . . . LG 684–686
Scie pour arboriculteurs, scie manuelle courbée . . . SFS 17
Scie pour arboriculteurs, scie manuelle droite . . . SFS 17
Scies à chaîne, affûteuses à chaîne . . . SFS 32–40
Scies à chaîne, affûteuses à chaîne, dérive-chaîne et repoussoir de rivet . . . SFS 26–57
Scies à chaîne, applications de pignon par modèle de scie . . . FOR 187–203
Scies à chaîne, applications de pignon par numéro de pièce Oregon® . . . FOR 204–208
Scies à chaîne, bouchons d'huile . . . LG 690
Scies à chaîne, bouchons de carburant . . . LG 690
Scies à chaîne, chaîne comment commander une chaîne . . . FOR 98
Scies à chaîne, clé . . . LG 677
Scies à chaîne, conduits d'essence . . . LG 688–690
Scies à chaîne, CS300 Oregon® 40 V MAX sans fil . . . OPE 15
Scies à chaîne, dérive-chaîne et riveteuse de nez de guide-chaîne, usage intensif . . . SFS 45
Scies à chaîne, dérive-chaîne, modèle d'établi . . . SFS 43
Scies à chaîne, échelle de chaîne . . . SFS 47
Scies à chaîne, écrous de guide . . . LG 686
Scies à chaîne, ensembles guide et chaîne . . . FOR 100–101
Scies à chaîne, filtres à air . . . LG 678–684
Scies à chaîne, filtres à essence . . . LG 691–692
Scies à chaîne, guide et chaîne, applications . . . FOR 21–97
Scies à chaîne, guide-chaîne, guide, lames de scie à chaîne . . . FOR 148–179
Scies à chaîne, guide-chaîne, guide, lames de scie à chaîne . . . FOR 148–179
Scies à chaîne, huile à guide et chaîne . . . SFS 19, 84
Scies à chaîne, huile pour scie à chaîne, coins d'abattage, tournevis-clés, divers . . . SFS 14, 19–20
Scies à chaîne, meules 4 1/8 po pour affûteuses à chaîne . . . SFS 41
Scies à chaîne, meules 5 3/4 po pour affûteuses à chaîne . . . SFS 40
Scies à chaîne, nez de guide remplaçable . . . FOR 167

# 2019 Index Alphabétique – FR


Scies à chaîne, outil de mesure de guide et de chaîne coupante . . . . . SFS 14
Scies à chaîne, outil de nettoyage de rainure de guide . . . . . SFS 14
Scies à chaîne, outil dresseur de rail et de guide . . . . . SFS 13
Scies à chaîne, photos de chaînes, descriptions, caractéristiques . . . . FOR 111–137
Scies à chaîne, photos de guides, descriptions, caractéristiques . . . . . FOR 154-166
Scies à chaîne, photos de pignons, descriptions, caractéristiques . . . . FOR 182–186
Scies à chaîne, pièces de rechange de chaîne . . . . . FOR 143
Scies à chaîne, pièces électriques . . . . . LG 684–686
Scies à chaîne, pignons . . . . . FOR 180–210
Scies à chaîne, poires d'amorçage . . . . . LG 690
Scies à chaîne, poulies de démarreur . . . . . LG 692
Scies à chaîne, protecteurs de guide-chaîne . . . . . SFS 13
Scies à chaîne, repoussoir de rivets de chaîne, modèle d'établi . . . . . SFS 44
Scies à chaîne, repoussoir de rivets de chaîne, usage intensif. . . . . SFS 46
Scies à chaîne, ressorts de démarreur . . . . . LG 693
Scies à chaîne, sac à outils . . . . . OPE 23
Scies à chaîne, support pour affûteuse à chaîne . . . . . SFS 41
Scies à chaîne, tableau de conversion de chaîne, N/P chaînes pour amateurs à N/P pour professionnels Oregon® . . . . . FOR 98
Scies à chaîne, tableau de limage de chaîne . . . . . FOR 141
Scies à chaîne, tableau de meules pour chaîne . . . . . FOR 141
Scies à chaîne, tableau de références croisées de la chaîne, Oregon® et autres marques . . . . . FOR 138–139
Scies à chaîne, tableaux de conversion de chaînes, longueurs de chaîne et comptes de maillons-guides. . . . . FOR 147
Scies à chaîne, tendeur de chaîne. . . . . LG 686–687
Scies à chaîne, tendeurs de chaîne . . . . . LG 686–687
Scies à chaîne, terminologie, pièce de chaîne, séquence de chaîne . . . . . FOR 110
Scies à chaîne, traverses . . . . . FOR 171–177
Scies à chaîne, trousse d'affûtage de chaîne . . . . . SFS 10
Scies à long manche, PS250 Oregon® 40 V MAX sans fil . . . . . OPE 20
Scies pour arboriculteurs . . . . . SFS 16–17
Scotts, courroies . . . . . LG 315
Scotts, lames . . . . . LG 537–539
Sears / Craftsman, adaptateurs de lame. . . . . LG 342
Sears / Craftsman, applications de guide et chaîne . . . . . FOR 23–25
Sears / Craftsman, applications de pignon. . . . . FOR 200
Sears / Craftsman, arbres . . . . . LG 903–904
Sears / Craftsman, bagues . . . . . LG 227–228
Sears / Craftsman, courroies . . . . . LG 315
Sears / Craftsman, lames de coupe-bordures. . . . . LG 587
Sears / Craftsman, roues . . . . . LG 1029–1046
Sears / Craftsman, roulements . . . . . LG 227–228
Secteur denté de direction, AYP . . . . . LG 941
Secteur denté de direction, Husqvarna . . . . . LG 941
Sécurité auditive, protecteurs d'oreille. . . . . SFS 121
Sécurité, renseignements de l'ANSI scie à chaîne. . . . . FOR 2–3
Sel de déglaçage pour neige et glace . . . . . SFS 97
Sel de déglaçage, neige et glace . . . . . SFS 97
Sensation, roues . . . . . LG 1029–1046
Serre-câbles en plastique . . . . . LG 723
Shihl, lames de coupe-bordures . . . . . LG 587
Shindaiwa, applications de guide et chaîne . . . . . FOR 79–83
Shindaiwa, bouchons de réservoir de carburant . . . . . LG 772
Shindaiwa, filtres à air . . . . . LG 212–213
Shindaiwa, lames de coupe-bordures . . . . . LG 587
Shindaiwa, pièces de taille-bordures et de souffleur . . . . . LG 1023–1024
Shindaiwa, ressorts de démarreur manuel . . . . . LG 937
**SIÈGES . . . . . LG 842–844**
**SILENCIEUX . . . . . LG 806–810**
Silencieux, Briggs & Stratton . . . . . LG 806–807
Silencieux, Cub Cadet . . . . . LG 807
Silencieux, Gravely . . . . . LG 807
Silencieux, Honda. . . . . LG 807–808
Silencieux, Kohler . . . . . LG 808–809
Silencieux, Murray . . . . . LG 809
Silencieux, Snapper . . . . . LG 809
Silencieux, Tecumseh . . . . . LG 809–810
Silencieux, Toro. . . . . LG 810
Silencieux, Wheel Horse . . . . . LG 810
Silencieux, Wisconsin . . . . . LG 810
Simplicity, bagues . . . . . LG 244–245
Simplicity, barres de raclage pour souffleuse à neige . . . . . LG 849
Simplicity, courroies . . . . . LG 316
Simplicity, embrayages à prise de force électrique . . . . . LG 733–741
Simplicity, lames . . . . . LG 539–545
Simplicity, roulements . . . . . LG 244–245
Siphon, carburants VP . . . . . SFS 81
Skil, applications de guide et chaîne . . . . . FOR 83
Skil, applications de pignon . . . . . FOR 201
Slime®, produit antifuite pour pneu . . . . . SFS 98
Snapper, adaptateurs de lame. . . . . LG 342
Snapper, applications de guide et chaîne. . . . . FOR 84
Snapper, applications de pignon . . . . . FOR 201
Snapper, bagues . . . . . LG 245–246
Snapper, bande de frein . . . . . LG 698
Snapper, barres de raclage pour souffleuse à neige . . . . . LG 849
Snapper, câbles de commande . . . . . LG 718–719
Snapper, courroies . . . . . LG 316–319
Snapper, disques d'entraînement . . . . . LG 727
Snapper, embrayages à prise de force électrique . . . . . LG 733–741
Snapper, filtres de conduite de carburant . . . . . LG 774–776
Snapper, interrupteurs d'arrêt d'urgence. . . . . LG 949
Snapper, interrupteurs d'allumage . . . . . LG 942–945
Snapper, interrupteurs de prise de force . . . . . LG 946–947
Snapper, interrupteurs de sécurité . . . . . LG 947–948
Snapper, interrupteurs marche-arrêt. . . . . LG 950
Snapper, joints à rotule . . . . . LG 938–939
Snapper, lames . . . . . LG 545–556
Snapper, pales de souffleuse à neige. . . . . LG 849
Snapper, patins de souffleuse à neige . . . . . LG 850
Snapper, pièces de taille-bordures et de souffleur . . . . . LG 1024
Snapper, poulies d'entraînement . . . . . LG 840
Snapper, poulies de démarreur manuel . . . . . LG 936
Snapper, roues . . . . . LG 1029–1046
Snapper, roues pneumatiques. . . . . LG 1044–1046
Snapper, roulements . . . . . LG 245–246
Snapper, silencieux. . . . . LG 809
Snapper, soufflet d'étanchéité. . . . . LG 805
Snapper, vis de cisaillement pour souffleuse à neige . . . . . LG 852–853
Socle de bûches . . . . . OPE 46
Socle de bûches intégré . . . . . OPE 46
Solénoïdes . . . . . LG 729–730
Solo, applications de guide et chaîne . . . . . FOR 84–87
Solo, applications de pignon. . . . . FOR 201
Solvant de nettoyage. . . . . SFS 94
Solvant, nettoyage . . . . . SFS 94
Souffleur dorsal BL120VX, 120v Professional Series™ . . . . . OPE 32
Souffleuse à main, Oregon® 40 V MAX sans fil . . . . . OPE 18
Souffleuse à neige, ailette, Toro. . . . . LG 851
Souffleuse à neige, amorceur, Cub Cadet . . . . . LG 860
Souffleuse à neige, amorceur, MTD. . . . . LG 860
Souffleuse à neige, bagues, Ariens . . . . . LG 853–854
Souffleuse à neige, bagues, Cub Cadet. . . . . LG 854–855
Souffleuse à neige, bagues, John Deere . . . . . LG 854
Souffleuse à neige, bagues, MTD . . . . . LG 854–855
Souffleuse à neige, barres de raclage . . . . . LG 847–849
Souffleuse à neige, barres de raclage, Ariens . . . . . LG 847
Souffleuse à neige, barres de raclage, Honda . . . . . LG 847
Souffleuse à neige, barres de raclage, Jacobsen . . . . . LG 848
Souffleuse à neige, barres de raclage, John Deere . . . . . LG 847–848
Souffleuse à neige, barres de raclage, Simplicity . . . . . LG 849
Souffleuse à neige, barres de raclage, Snapper. . . . . LG 849
Souffleuse à neige, barres de raclage, Toro . . . . . LG 849
Souffleuse à neige, bride de goulotte, Cub Cadet . . . . . LG 855
Souffleuse à neige, bride de goulotte, MTD . . . . . LG 855
Souffleuse à neige, câbles de commande de direction . . . . . LG 701–720
Souffleuse à neige, câbles de commande de goulotte . . . . . LG 701–720
Souffleuse à neige, câbles de commande de vis sans fin. . . . . LG 701–720
Souffleuse à neige, câbles de commande, Cub Cadet. . . . . LG 856–859
Souffleuse à neige, câbles de commande, MTD . . . . . LG 856–859
Souffleuse à neige, came de blocage de l'embrayage, Cub Cadet . . . . . LG 856
Souffleuse à neige, came de blocage de l'embrayage, MTD . . . . . LG 856
Souffleuse à neige, clé d'allumage, Cub Cadet. . . . . LG 861
Souffleuse à neige, clé d'allumage, MTD. . . . . LG 861
Souffleuse à neige, clé de démarreur, MTD . . . . . LG 861
Souffleuse à neige, courroies . . . . . LG 862–863
Souffleuse à neige, déclencheur de commande de direction, Cub Cadet . . . . LG 856
Souffleuse à neige, déclencheur de commande de direction, MTD . . . . . LG 856
Souffleuse à neige, démarreurs 120 V, Cub Cadet . . . . . LG 861
Souffleuse à neige, démarreurs 120 V, MTD . . . . . LG 861
Souffleuse à neige, démarreurs 120 V, Tecumseh . . . . . LG 861
Souffleuse à neige, démarreurs manuels, Cub Cadet. . . . . LG 860–861
Souffleuse à neige, démarreurs manuels, MTD . . . . . LG 860–861
Souffleuse à neige, disque d'entraînement . . . . . LG 851
Souffleuse à neige, engrenage à vis sans fin en bronze, Cub Cadet . . . . . LG 856
Souffleuse à neige, engrenage à vis sans fin en bronze, MTD . . . . . LG 856
Souffleuse à neige, guide câble d'inclinaison de goulotte, Cub Cadet . . . . . LG 856
Souffleuse à neige, guide câble d'inclinaison de goulotte, MTD . . . . . LG 856
Souffleuse à neige, pales . . . . . LG 846–847
Souffleuse à neige, pales, Honda . . . . . LG 846
Souffleuse à neige, pales, MTD . . . . . LG 846
Souffleuse à neige, pales, Snapper . . . . . LG 847
Souffleuse à neige, pales, Toro . . . . . LG 847

Souffleuse à neige, patins . . . . . LG 849–851
Souffleuse à neige, patins, Ariens . . . . . LG 850
Souffleuse à neige, patins, Ariens . . . . . LG 850
Souffleuse à neige, patins, AYP . . . . . LG 850
Souffleuse à neige, patins, Honda. . . . . LG 850
Souffleuse à neige, patins, John Deere. . . . . LG 850
Souffleuse à neige, patins, MTD. . . . . LG 850
Souffleuse à neige, patins, Murray . . . . . LG 850
Souffleuse à neige, patins, Snapper . . . . . LG 850
Souffleuse à neige, patins, Toro. . . . . LG 851
Souffleuse à neige, patins, Universal. . . . . LG 849
Souffleuse à neige, plaques de raclage . . . . . LG 847–849
Souffleuse à neige, plaques de raclage, Cub Cadet . . . . . LG 848
Souffleuse à neige, plaques de raclage, MTD . . . . . LG 848–849
Souffleuse à neige, plaquette frein, Cub Cadet . . . . . LG 856
Souffleuse à neige, plaquette frein, MTD. . . . . LG 856
Souffleuse à neige, poignée de démarreur, pour mitaines . . . . . LG 851
Souffleuse à neige, roue, Cub Cadet . . . . . LG 856
Souffleuse à neige, roue, MTD. . . . . LG 856
Souffleuse à neige, roulements. . . . . LG 853–855
Souffleuse à neige, roulements, Ariens . . . . . LG 853–854
Souffleuse à neige, roulements, Cub Cadet . . . . . LG 854–855
Souffleuse à neige, roulements, John Deere. . . . . LG 854
Souffleuse à neige, roulements, MTD . . . . . LG 854–855
Souffleuse à neige, trousses de carburateur, Cub Cadet . . . . . LG 859
Souffleuse à neige, trousses de carburateur, MTD . . . . . LG 859
Souffleuse à neige, vis de cisaillement. . . . . LG 852–853
Souffleuse à neige, vis de cisaillement, Ariens . . . . . LG 852–853
Souffleuse à neige, vis de cisaillement, Honda . . . . . LG 852–853
Souffleuse à neige, vis de cisaillement, Husqvarna. . . . . LG 852–853
Souffleuse à neige, vis de cisaillement, Jacobsen . . . . . LG 852–853
Souffleuse à neige, vis de cisaillement, John Deere . . . . . LG 852–853
Souffleuse à neige, vis de cisaillement, MTD . . . . . LG 852–853
Souffleuse à neige, vis de cisaillement, Murray . . . . . LG 852–853
Souffleuse à neige, vis de cisaillement, Noma. . . . . LG 852–853
Souffleuse à neige, vis de cisaillement, Snapper . . . . . LG 852–853
Souffleuse à neige, vis de cisaillement, Universal . . . . . LG 852–853
Souffleuse à neige, vis sans fin, MTD. . . . . LG 846
Souffleuse, BL300 Oregon® 40 V MAX sans fil, portative. . . . . OPE 18
Soupape, purge d'huile. . . . . LG 760
Soupapes d'admission, Honda. . . . . LG 755
Soupapes d'arrêt de conduit d'essence. . . . . LG 766–767
Soupapes d'échappement, Honda. . . . . LG 755
Spartan, lames . . . . . LG 557
ST275 Coupe-bordure/taille-bordure. . . . . OPE 19
ST275 Tête de taille-bordure . . . . . OPE 26
Stabilisateur d'essence . . . . . SFS 85
Stabilisateur, essence . . . . . SFS 85
Stanley Hydraulic, applications de guide et chaîne . . . . . FOR 87
Steiner, lames. . . . . LG 557–558
Stihl, applications de guide et chaîne. . . . . FOR 88–92
Stihl, applications de pignon. . . . . FOR 201–203
Stihl, bobines d'allumage . . . . . LG 784–787
Stihl, Bouchons de réservoir de carburant. . . . . LG 773
Stihl, cliquets et ressorts de démarreur . . . . . LG 930–931
Stihl, courroies . . . . . LG 320
Stihl, filtres à air . . . . . LG 213–216
Stihl, pièces de taille-bordures et de souffleur . . . . . LG 1024–1026
Stihl, poignée de démarreur. . . . . LG 931
Stihl, poulies de démarreur manuel . . . . . LG 936
Stihl, ressorts de démarreur manuel. . . . . LG 937
Stocks essentiels. . . . . SFS 21
Sun Joe, applications de guide et chaîne. . . . . FOR 92–93
SuperTwist Gatorline Magnum™ pour ST275 . . . . . OPE 27
Support d'arbre de direction, AYP. . . . . LG 939
Support d'arbre de direction, Husqvarna. . . . . LG 939
Support de fendeuse de bûches. . . . . OPE 46
Support, affûteuse pour scie coupante. . . . . SFS 41
Support, crayon de marquage. . . . . SFS 19
Support, fendeuses de bûches . . . . . OPE 46
Supports d'équipement commercial . . . . . SFS 74–76
Supports, équipement commercial. . . . . SFS 74–76
Sutech, lames. . . . . LG 559
Swisher, lames . . . . . LG 559
Swisher, roues anti-crevaison semi-pneumatiques. . . . . LG 1044–1046
Système d'outils sans fil, BL300 Oregon®, 40 V MAX, souffleuse . . . . . OPE 18
Système d'outils sans fil, bloc-batteries au lithium-ion PowerNow™. . . . . OPE 10
Système d'outils sans fil, chargeurs de batterie. . . . . OPE 10
Système d'outils sans fil, CS300 Oregon®, 40 V MAX, scie à chaîne. . . . . OPE 15
Système d'outils sans fil, HT250 Oregon®, 40 V MAX, taille-haie . . . . . OPE 21
Système d'outils sans fil, présentoir de point de vente . . . . . OPE 27–29
Système d'outils sans fil, PS250 Oregon®, 40 V MAX, scie à long manche . . . OPE 20
Système d'outils sans fil, ST275 Oregon®, 40 V MAX, coupe-bordure/taille-bordure. . . . . OPE 19
Système d'outils sans fil, tondeuse à gazon, LM300 Oregon® 40V MAX. . . . . OPE 16
Système d'outils sans fil, tondeuse à gazon, LM400 Oregon® 40V MAX. . . . . OPE 17
Système d'outils sans fil, WL275 Oregon®, 40 V MAX, lampe baladeuse . . . . OPE 22
Système sans fil pour accessoires multiples . . . . . OPE 11–14

## T

Tableau de dépannage des courroies . . . . . LG 338–339
Tableau, applications de guide et chaîne . . . . . FOR 21–97
Tableau, Classification ANSI des scies à chaîne . . . . . FOR 2
Tableau, conversion des longueurs de scie à chaîne et comptes de maillons-guides . . . . . FOR 147
Tableau, ensembles guide et chaîne . . . . . FOR 100–101
Tableau, pignons de scie à chaîne, applications par modèle de scie. . . . FOR 187–203
Tableau, pignons de scie à chaîne, applications par numéro de pièce Oregon® . . . . . FOR 204–208
Tableau, scie à chaîne, pièces de rechange . . . . . FOR 143
Tableau, spécification du limage de la scie à chaîne . . . . . FOR 140–141
Tableaux de référence pour trousse de carburateur. . . . . LG 634–674
Tachymètre, sans fil . . . . . SFS 67
Taille-bordures EG120VX , 120v Professional Series™ . . . . . OPE 35
Taille-bordures EG600, accessoires multiples sans fil . . . . . OPE 13
Taille-haie , HT250 Oregon®, 40 V MAX sans fil . . . . . OPE 21
Taille-haie BHT120VX, 120v Professional Series™. . . . . OPE 34
Taille-haie HT600, accessoires multiples sans fil . . . . . OPE 13
Tanaka, applications de guide et chaîne . . . . . FOR 93–95
Tanaka, applications de pignon . . . . . FOR 203
Tanaka, bouchons de réservoir de carburant . . . . . LG 773
Tanaka, lames de coupe-bordures . . . . . LG 588
Tanaka, pièces de taille-bordures et de souffleur. . . . . LG 1026
Tecumseh, bobines d'allumage . . . . . LG 784–787
Tecumseh, carburateurs. . . . . LG 598–601
Tecumseh, clé d'allumage pour souffleuse à neige . . . . . LG 861
Tecumseh, cuves de carburateurs . . . . . LG 625
Tecumseh, démarreurs 120 V pour souffleuse à neige . . . . . LG 861
Tecumseh, démarreurs manuels . . . . . LG 922–925
Tecumseh, diaphragmes de carburateur. . . . . LG 623
Tecumseh, engrenages de démarreur électrique . . . . . LG 929
Tecumseh, ensemble de joints statiques. . . . . LG 758
Tecumseh, filtres à air, mousse . . . . . LG 219
Tecumseh, filtres à air, papier. . . . . LG 216–218
Tecumseh, filtres à huile. . . . . LG 814–819
Tecumseh, filtres de conduite de carburant . . . . . LG 774–776
Tecumseh, flotteurs de carburateur . . . . . LG 625
Tecumseh, joint à l'huile . . . . . LG 759
Tecumseh, joints statiques . . . . . LG 758–759
Tecumseh, moteurs de démarreur . . . . . LG 922
Tecumseh, plots et condensateur. . . . . LG 789
Tecumseh, poignée de démarreur. . . . . LG 931
Tecumseh, pointeaux d'admission du carburateur . . . . . LG 629
Tecumseh, poires d'amorçage. . . . . LG 630
Tecumseh, poulies de démarreur manuel . . . . . LG 936
Tecumseh, silencieux . . . . . LG 809–810
Tecumseh, tableau de référence de carburateur . . . . . LG 594–595
Tecumseh, trousses de carburateur . . . . . LG 608–609
Tender, Battery . . . . . LG 743
Tendeurs de chaîne, scies à chaîne . . . . . LG 686–687
Tendeurs de chaîne, scies à chaîne . . . . . LG 686–687
Testeur d'allumage . . . . . SFS 65
Testeur de compression . . . . . SFS 65
Testeur, compression . . . . . SFS 65
Testeur, étincelle . . . . . SFS 65
Tête de coupe-herbes à chargement rapide . . . . . OPE 26
Tête de taille-bordures pour matériel de plein air motorisé . . . . . OPE 26
Tête motorisée PH600, accessoires multiples sans fil . . . . . OPE 12
Têtes de taille-bordures de rechange ST275. . . . . OPE 26
Têtes de taille-bordures, 4 po Heavy Duty Gatorhead Magnum™ . . . . . LG 989
Têtes de taille-bordures, 6 po Heavy Duty Gatorhead Magnum™ . . . . . LG 990
Têtes de taille-bordures, à alimentation de cordon à percussion . . . . . LG 985–994
Têtes de taille-bordures, à alimentation manuelle . . . . . LG 995
Têtes de taille-bordures, Gator® SpeedLoad™ . . . . . LG 968–978
Têtes de taille-bordures, rechange pour Stihl 25-2 Auto Cut. . . . . LG 988
Têtes de taille-bordures, tableau d'applications. . . . . LG 997–1013
Têtes de taille-bordures, tête de coupe à fil fixe. . . . . LG 996
Têtes de taille-bordures, tête de coupe Lightning Load™ . . . . . LG 985
Têtes de taille-bordures, tête de coupe Pivotrim™ . . . . . LG 996
Têtes de taille-bordures, tête de coupe Speed-Feed™ . . . . . LG 986–987
Têtes de taille-bordures, tête Jet-Fit Express de Kwik Loader™ . . . . . LG 995

# 2019 Index Alphabétique – FR


Têtes de taille-bordures, têtes Jet-Fit™ . . . . . LG 995
Têtes longues, Honda . . . . . LG 755
**TIGES . . . . . LG 869–910**
Tiges d'entraînement . . . . . LG 939
Tiges de soupape de pneu sans chambre à air . . . . . LG 957
Tiges de soupape, pneus sans chambre à air . . . . . LG 957
Tiges, Briggs & Stratton . . . . . LG 750
Tiges, Honda . . . . . LG 755
Tillotson, carburateur . . . . . LG 595
Tillotson, pointeaux d'admission du carburateur . . . . . LG 629
Tillotson, trousses de carburateur . . . . . LG 609–610
TK, trousses de carburateur . . . . . LG 608
Tondeuse à gazon commerciale, entretoises et bagues . . . . . LG 697
Tondeuse à gazon commerciale, moteurs de roue . . . . . LG 696
Tondeuse à gazon commerciale, pièces de roulette-guide . . . . . LG 694–695
Tondeuse à gazon LM300 Oregon® 40V MAX, système d'outils sans fil . . . . . OPE 16
Tondeuse à gazon LM400 Oregon® 40V MAX, système d'outils sans fil . . . . . OPE 17
Tondeuse à gazon, accessoire d'affûtage de lames . . . . . SFS 62
Tondeuse à gazon, affûteuse de lames . . . . . SFS 58–63
Tondeuse à gazon, aiguisoir de lames . . . . . SFS 58–63
Tondeuse à gazon, boîte de lames . . . . . SFS 21
Tondeuse à gazon, équilibreur de lame . . . . . SFS 63
Tondeuse à gazon, essieux-porteurs . . . . . SFS 77–78
Tondeuse à gazon, outil de nivellement de châssis . . . . . SFS 63
Tondeuse à gazon, pièces de rechange pour affûteuse de lame . . . . . SFS 62
Tondeuse à gazon, rampes . . . . . SFS 64
Tondeuse à gazon, sièges . . . . . LG 842–844
Toro, ailette de souffleuse à neige . . . . . LG 851
Toro, applications de guide et chaîne . . . . . FOR 95
Toro, arbres . . . . . LG 905
Toro, arrêt de la poignée . . . . . LG 802
Toro, barres de raclage pour souffleuse à neige . . . . . LG 849
Toro, bouchons de réservoir de carburant . . . . . LG 773
Toro, câbles de commande . . . . . LG 719–720
Toro, courroies . . . . . LG 320–323
Toro, embrayages à prise de force électrique . . . . . LG 733–741
Toro, filtres à air . . . . . LG 219–220
Toro, filtres de conduite de carburant . . . . . LG 774–776
Toro, interrupteurs d'arrêt d'urgence . . . . . LG 949
Toro, interrupteurs de prise de force . . . . . LG 946–947
Toro, interrupteurs de sécurité . . . . . LG 947–948
Toro, interrupteurs marche-arrêt . . . . . LG 949
Toro, lames . . . . . LG 560–573
Toro, pales de souffleuse à neige . . . . . LG 847
Toro, patins de souffleuse à neige . . . . . LG 851
Toro, poulies de tension . . . . . LG 834
Toro, roues . . . . . LG 1029–1046
Toro, roues anti-crevaison semi-pneumatiques . . . . . LG 1044–1046
Toro, roues pneumatiques . . . . . LG 1044–1046
Toro, roues/roulettes anti-bascule . . . . . LG 1037–1042
Toro, roulements . . . . . LG 247
Toro, silencieux . . . . . LG 810
Tournevis-clés . . . . . SFS 19
Traitement de moteur Sea Foam . . . . . SFS 81
Traitement de moteur, Sea Foam . . . . . SFS 81
Traitements de moteur . . . . . SFS 81
Traitements, moteur . . . . . SFS 81
**TRINGLERIE, CRICS ET QUINCAILLERIE . . . . . LG 792–801**
Trousse d'entretien, chaîne coupante . . . . . SFS 10
Trousse de réparation de pneu sans chambre à air . . . . . SFS 69
Trousse de système de carburant . . . . . LG 764–765
Trousses de carburateur . . . . . LG 602–621
Trousses de carburateur Nikki . . . . . LG 606
Trousses de carburateur Walbro . . . . . LG 608–614
Trousses de carburateur, Briggs & Stratton . . . . . LG 602–604
Trousses de carburateur, Cub Cadet . . . . . LG 604–605
Trousses de carburateur, Homelite . . . . . LG 605
Trousses de carburateur, Honda . . . . . LG 605
Trousses de carburateur, Kohler . . . . . LG 605
Trousses de carburateur, Lawn Boy . . . . . LG 606
Trousses de carburateur, MTD . . . . . LG 606
Trousses de carburateur, Nikki . . . . . LG 606
Trousses de carburateur, Oregon® . . . . . LG 606–608
Trousses de carburateur, Tecumseh . . . . . LG 608–609
Trousses de carburateur, Tillotson . . . . . LG 609–610
Trousses de carburateur, TK . . . . . LG 608
Trousses de carburateur, Walbro . . . . . LG 608–614
Trousses de carburateur, Zama . . . . . LG 614–621
Trousses de réparation de pulvérisateurs à dos . . . . . LG 911–912
Trousses de réparation, pneumatique sans chambre à air . . . . . SFS 69
Troy-Bilt, applications de guide et chaîne . . . . . FOR 95–96
Troy-Bilt, courroies . . . . . LG 324
Troy-Bilt, lames . . . . . LG 573–576
Troy-Bilt, lames de coupe-bordures . . . . . LG 588
Tuyau, silencieux Honda . . . . . LG 807–808


## U


**UNIVERSELLES, LAMES . . . . . LG 368**


## V


Vérins . . . . . LG 796–798
Vérins d'amortisseur . . . . . LG 695
Veste de pluie . . . . . SFS 115
Vêtement de pluie . . . . . SFS 115
Vêtements, pluie . . . . . SFS 115
Vis à épaulement . . . . . SFS 104–105
Vis de cisaillement universelles pour souffleuse à neige . . . . . LG 852–853
Vis de cisaillement, souffleuses à neige . . . . . LG 852–853
Vis de jeu de douilles, assortiment . . . . . SFS 101
Vis, autotaraudeuse . . . . . SFS 105
Visière de sécurité . . . . . SFS 120
Visière, sécurité . . . . . SFS 120
Voiture-club, courroies . . . . . LG 272


## W


Walker, adaptateurs de lame . . . . . LG 342
Walker, courroies . . . . . LG 325
Walker, lames . . . . . LG 576
Walker, roues anti-crevaison semi-pneumatiques . . . . . LG 1044–1046
Warner, embrayages à prise de force électrique . . . . . LG 733–741
Weed Eater, lames de coupe-bordures . . . . . LG 588
Weed Eater, pièces de taille-bordures et de souffleur . . . . . LG 1027
Wen / Wagner, applications de guide et chaîne . . . . . FOR 96
Western Auto, applications de pignon . . . . . FOR 203
Wheel Horse, filtres à air . . . . . LG 220
Wheel Horse, roues/roulettes anti-bascule . . . . . LG 1037–1042
Wheel Horse, silencieux . . . . . LG 810
Wisconsin Robin, filtres à air . . . . . LG 220–222
Wisconsin, câbles de commande . . . . . LG 720
Wisconsin, filtres à air . . . . . LG 220
Wisconsin, silencieux . . . . . LG 810
Woods, courroies . . . . . LG 325–330
Woods, embrayages à prise de force électrique . . . . . LG 733–741
Woods, lames . . . . . LG 577–579
Worx, applications de guide et chaîne . . . . . FOR 97
Wright Stander, arbres . . . . . LG 905
Wright Stander, courroies . . . . . LG 330–331
Wright Stander, embrayages à prise de force électrique . . . . . LG 733–741
Wright Stander, lames . . . . . LG 579–582
Wright Stander, roues anti-crevaison semi-pneumatiques . . . . . LG 1044–1046
Wypall, lingette préhumectée pour les mains . . . . . SFS 68


## Y


Yamakoyo, carburateurs . . . . . LG 601
Yazoo, courroies . . . . . LG 297
Yazoo, roulements . . . . . LG 248


## Z


Zama, carburateurs . . . . . LG 595
Zama, poires d'amorçage . . . . . LG 632
Zama, trousses de carburateur . . . . . LG 614–621
Zipper, lames . . . . . LG 583

120V Professional Series™, baterías . . . OPE 36
120V Professional Series™, bordeadora EG120VX . . . OPE 35
120V Professional Series™, cable de herramienta de bastón . . . OPE 36
120V Professional Series™, cargador C1600 . . . OPE 36
120V Professional Series™, cortasetos eléctrico BHT120VX . . . OPE 34
120V Professional Series™, desmalezadora ST120VX . . . OPE 33
120V Professional Series™, herramientas y accesorios . . . OPE 30–37
120V Professional Series™, mochila sopladora BL120VX . . . OPE 32
120V Professional Series™, mochilas de baterías . . . OPE 36
120V Professional Series™, pantalla de punto de venta . . . OPE 37

## A

Abrazaderas de cables de plástico . . . LG 723
Abrazaderas para mangueras . . . LG 765
Abrazaderas, manguera . . . LG 765
Abridor para cadenas de motosierra de bolsillo . . . SFS 47
Abridor para cadenas de motosierra e impulsor de remachadora en la punta de la barra de la motosierra . . . SFS 45
Abridor para cadenas de motosierra modelo para banco . . . SFS 43
Abridor para cadenas de motosierra, de bolsillo . . . SFS 47
Abridor, para cadenas de motosierra modelo para banco . . . SFS 43
Absorbente de aceite Dri . . . SFS 68
Accesorios de acelerador de minimoto . . . LG 722
Accesorios de acelerador, surtido . . . SFS 101
Accesorios para afiladores de cadenas de motosierras . . . SFS 40–41
Accesorios para afiladores de cuchillas cortadoras de césped . . . SFS 62
Aceite hidráulico, SP anti desgaste . . . SFS 84
Aceite para motor de 2 tiempos . . . SFS 82
Aceite para motor de 2 tiempos Only One™ . . . SFS 19
Aceite sintético para motor a 2 tiempos, combustibles VP . . . SFS 83
Aceite, 2 tiempos . . . SFS 82
Aceite, 2 tiempos sintético, combustibles VP . . . SFS 83
Aceite, absorbente Dri . . . SFS 68
Aceite, barra y cadena de la sierra . . . SFS 19
Aceite, herramienta neumática . . . SFS 83
Aceite, hidráulico, SP anti desgaste . . . SFS 84
Aceite, Only One™ para motor de 2 tiempos . . . SFS 19
Acopladores . . . LG 793
Adaptador del volante de dirección, AYP . . . LG 939–940
Adaptador del volante de dirección, Husqvarna . . . LG 939–940
**ADAPTADORES DE CUCHILLA . . . LG 340–342**
Adaptadores de cuchilla, AYP . . . LG 340
Adaptadores de cuchilla, Bobcat . . . LG 340
Adaptadores de cuchilla, Husqvarna . . . LG 340
Adaptadores de cuchilla, MTD . . . LG 340–341
Adaptadores de cuchilla, Murray . . . LG 342
Adaptadores de cuchilla, Sears . . . LG 342
Adaptadores de cuchilla, Snapper . . . LG 342
Adaptadores de cuchilla, Walker . . . LG 342
Aerosol, limpiador de bornes de la batería . . . SFS 95
Aerosol, limpiador de frenos . . . SFS 94
Aerosol, protector de bornes de la batería . . . SFS 95
Afilador eléctrico de cadena para motosierra de 12-Volt Sure Sharp® . . . SFS 11
Afiladoras de cadenas automáticas . . . SFS 26–31
Afiladoras, cuchillas cortadoras de césped . . . SFS 58–63
Afiladores, cadena de motosierra . . . SFS 32–40
Afiladores, cuchillas cortadoras de césped . . . SFS 58–63
Agarradera de guante para palanca de arranque de lanzador de nieve . . . LG 851
Ahorrador de bomba, hidrolavadora, no aerosol . . . SFS 98
Aislador, borne de la batería . . . LG 743
Aislador, carburador Honda . . . LG 601
Ajustador, cadena de motosierra . . . SFS 47
Ajustadores de cadena, motosierras . . . LG 686–687
Alambre interno del cable del acelerador, rodillo . . . LG 721
Allis-Chalmers, aplicaciones para ruedas dentadas . . . FOR 187
Allis-Chalmers, cuchillas . . . LG 369
Alpina, aplicaciones para ruedas dentadas . . . FOR 187
AMF, bujes . . . LG 243
AMF, cojinetes . . . LG 243
AMF, correas . . . LG 259
AMF, ruedas . . . LG 1029–1046
AMF, ruedas intermedias . . . LG 824
AMF, ruedas/rodillos antidesbroce . . . LG 1037–1042
AMF, vástagos . . . LG 869
Anillos de pistones, Briggs & Stratton . . . LG 750
Anillos en E, empaques de exhibición . . . LG 799
Anteojos de seguridad . . . SFS 117–119
Anteojos de seguridad, soporte de exhibición . . . SFS 20
Anteojos protectores . . . SFS 117–119
Anteojos protectores, seguridad . . . SFS 117–119
Anteojos, seguridad . . . SFS 117–119
**APLICACIONES DE BARRA Y CADENA . . . FOR 21–97**
Aplicaciones de motosierras, barras y cadenas . . . FOR 21–97
Aplicador de lubricante del talón del neumático . . . SFS 68
Aplicador, lubricante del talón del neumático . . . SFS 68
Arandela, boquilla tanque de combustible . . . LG 767
Arandelas . . . SFS 106
Arandelas de acero en forma de copa . . . SFS 106
Arandelas de fibra . . . SFS 106
Arandelas del sistema de combustible . . . LG 763–764
Arandelas planas de acero . . . SFS 106
Arandelas, acero chato . . . SFS 106
Arandelas, acero en forma de copa . . . SFS 106
Arandelas, fibra . . . SFS 106
Ariens, barras raspadoras para lanzadores de nieve . . . LG 847
Ariens, bujes . . . LG 225–227
Ariens, bujes para lanzador de nieve . . . LG 853–854
Ariens, cojinetes . . . LG 225–227
Ariens, cojinetes para lanzador de nieve . . . LG 853–854
Ariens, conjuntos semineumáticos de ruedas sin pinchaduras . . . LG 1044–1046
Ariens, correas . . . LG 264–266
Ariens, cuchillas . . . LG 369–374
Ariens, cuchillas de cortadora de bordes . . . LG 584
Ariens, deslizaderas para lanzadores de nieve . . . LG 850
Ariens, deslizaderas para lanzadores de nieve . . . LG 850
Ariens, embragues eléctricos TDF . . . LG 733–741
Ariens, filtros de aire . . . LG 179
Ariens, interruptores de encendido . . . LG 942–945
Ariens, interruptores de seguridad . . . LG 947–948
Ariens, interruptores TDF . . . LG 946–947
Ariens, pernos de cortar para lanzadores de nieve . . . LG 852–853
Ariens, vástagos . . . LG 869
Arnés para cortadora, universal . . . LG 1027
Arnés universal para cortadora . . . LG 1027
Aros de pistones, Honda . . . LG 754
Aros de retención, surtido . . . SFS 103
Aros, Briggs & Stratton . . . LG 750
Aros, Honda . . . LG 754
Arrancador eléctrico, engranajes . . . LG 927–928
Arrancador eléctrico, escobillas . . . LG 927
Arrancador eléctrico, motores . . . LG 915–921
Arrancador eléctrico, piezas . . . LG 926–928
Arrancador eléctrico, propulsores . . . LG 926–927
Arrancador, anillo retenedor de trinquetes . . . LG 932
Arrancador, embrague, Briggs & Stratton . . . LG 929
Arrancador, interruptores . . . LG 942–945
Arrancador, juegos de reparación de trinquetes . . . LG 932
Arrancador, manija, agarradera de guante para lanzador de nieve . . . LG 851
Arrancador, manija, Briggs & Stratton . . . LG 929–930
Arrancador, manija, Honda . . . LG 930
Arrancador, manija, Stihl . . . LG 931
Arrancador, manija, Tecumseh . . . LG 931
Arrancador, motores . . . LG 915–921
Arrancador, motores, Briggs & Stratton . . . LG 915–916
Arrancador, motores, Honda . . . LG 918
Arrancador, motores, Kawasaki . . . LG 917–918
Arrancador, motores, Kohler . . . LG 918–919
Arrancador, motores, MTD . . . LG 921
Arrancador, motores, Onan . . . LG 921
Arrancador, motores, Tecumseh . . . LG 922
Arrancador, poleas, motosierras . . . LG 692
Arrancador, propulsores, arrancadores eléctricos . . . LG 926–928
Arrancador, resortes, motosierras . . . LG 693
Arrancador, sombreretes, Honda . . . LG 929
Arrancador, tornillos centrales, Honda . . . LG 929
Arrancador, trinquetes y resortes . . . LG 930–931
Arrancador, trinquetes y resortes, Briggs & Stratton . . . LG 930–931
Arrancador, trinquetes y resortes, Echo . . . LG 930–931
Arrancador, trinquetes y resortes, Honda . . . LG 930–931
Arrancador, trinquetes y resortes, Stihl . . . LG 930–931
Arrancador, troncos . . . LG 930–931
**ARRANCADORES . . . LG 915–925**
Arrancadores manuales . . . LG 922–925
Arrancadores manuales Mitsubishi . . . LG 924
Arrancadores manuales, Briggs & Stratton . . . LG 923
Arrancadores manuales, Honda . . . LG 922–923
Arrancadores manuales, Kawasaki . . . LG 924
Arrancadores manuales, Komatsu . . . LG 924
Arrancadores manuales, Mitsubishi . . . LG 924
Arrancadores manuales, MTD . . . LG 925
Arrancadores manuales, Robin . . . LG 925
Arrancadores manuales, Tecumseh . . . LG 922–925

# 2019 Índice Alfabético – ES


Arrancadores, arranque manual . . . . . LG 922–925
Arrancadores, eléctricos . . . . . LG 915–921
Arranque, llaves . . . . . LG 945–946
Arranque, manijas . . . . . LG 929–930
Arranque, solenoides . . . . . LG 729–730
**ASIENTOS . . . . . LG 842–844**
AYP, adaptador del volante de dirección . . . . . LG 939
AYP, adaptadores de cuchilla . . . . . LG 340
AYP, buje de dirección . . . . . LG 939–940
AYP, bujes . . . . . LG 227–228
AYP, cables de control . . . . . LG 701–703
AYP, cojinetes . . . . . LG 227–228
AYP, correas . . . . . LG 259–264
AYP, correas de bloqueo de la campana de la cortadora . . . . . LG 803
AYP, cuchillas . . . . . LG 374–382
AYP, deslizaderas para lanzadores de nieve . . . . . LG 850
AYP, eje de dirección . . . . . LG 940
AYP, embragues eléctricos TDF . . . . . LG 733–741
AYP, engranaje del sector de dirección . . . . . LG 939–940
AYP, enlaces de arrastre . . . . . LG 939
AYP, eslabones de dirección . . . . . LG 939
AYP, interruptores de encendido . . . . . LG 942–945
AYP, interruptores de seguridad . . . . . LG 947–948
AYP, interruptores TDF . . . . . LG 946–947
AYP, piezas para la suspensión de la plataforma de la cortadora . . . . . LG 804
AYP, poleas de propulsión . . . . . LG 834
AYP, ruedas . . . . . LG 1029–1046
AYP, ruedas intermedias . . . . . LG 824–825
AYP, ruedas/rodillos antidesbroce . . . . . LG 1037–1042
AYP, soporte del eje de dirección . . . . . LG 939
AYP, vástagos . . . . . LG 870–876


## B


Barra de guía CCS300 . . . . . OPE 25
Barra de guía CS1500 . . . . . OPE 25
Barra de guía CS250 . . . . . OPE 25
Barra de guía PS250 . . . . . OPE 25
Barras de tracción . . . . . LG 793
**BARRAS GUÍA . . . . . FOR 148–179**
**BARRAS GUÍA - Montajes de la sierra . . . . . FOR 171–177**
Barras guía de repuesto para OPE . . . . . OPE 25
Barras guía para OPE . . . . . OPE 25
Barras guía, familias de barras Oregon® . . . . . FOR 150–169
Barras guía, sistema de numeración de partes . . . . . FOR 152–153
Barras raspadoras, lanzadores de nieve . . . . . LG 847–849
Base integrada para troncos . . . . . OPE 46
Base para troncos . . . . . OPE 46
Base, afiladores de cadenas de motosierras . . . . . SFS 41
Batería, aislamiento de la terminal . . . . . LG 743
Batería, borne de plomo . . . . . LG 743
Batería, cables . . . . . LG 744
Batería, cargador . . . . . LG 743
Batería, cargadores . . . . . OPE 10
Batería, cubierta de la terminal . . . . . LG 743
Batería, extremo del cable . . . . . LG 744
Batería, hidrómetro . . . . . LG 744
Batería, lengüeta del cable . . . . . LG 743
Batería, paquetes . . . . . OPE 10
Batería, rociador para limpieza del borne . . . . . SFS 95
Batería, rociador para protección del borne . . . . . SFS 95
Batería, Tender . . . . . LG 743
Baterías . . . . . LG 744
Baterías, 120V Professional Series™ . . . . . OPE 36
Befco, cuchillas . . . . . LG 382
Better Outdoors, cuchillas . . . . . LG 383
Bidones de combustible . . . . . SFS 86–88
Bidones de combustible sólo para Canadá . . . . . SFS 90–91
Bidones de combustible, sólo Canadá . . . . . SFS 90–91
Bidones de seguridad, desechos aceitosos, polietileno . . . . . SFS 88
Bidones para aceite usado de seguridad, polietileno . . . . . SFS 88
Bidones, combustible . . . . . SFS 86–88
Bielas, Briggs & Stratton . . . . . LG 750
Bielas, Briggs & Stratton . . . . . LG 750
Bielas, Honda . . . . . LG 755
Bielas, Honda . . . . . LG 755
Big Bee, cuchillas . . . . . LG 384
Black & Decker, aplicaciones de barras y cadenas . . . . . FOR 22
Black & Decker, cuchillas de cortadora de bordes . . . . . LG 584
Bobcat, adaptadores de cuchilla . . . . . LG 340
Bobcat, bujes . . . . . LG 228–230
Bobcat, cables de control . . . . . LG 703
Bobcat, cojinetes . . . . . LG 228–230
Bobcat, conjuntos de ruedas neumáticas . . . . . LG 1044–1046
Bobcat, conjuntos semineumáticos de ruedas sin pinchaduras . . . . . LG 1044–1046
Bobcat, correas . . . . . LG 267–269
Bobcat, cuchillas . . . . . LG 384–388
Bobcat, embragues eléctricos TDF . . . . . LG 733–741
Bobcat, filtros de combustible en el conducto . . . . . LG 774–776
Bobcat, interruptores de seguridad . . . . . LG 947–948
Bobcat, interruptores TDF . . . . . LG 946–947
Bobcat, poleas de propulsión . . . . . LG 835
Bobcat, rótulas . . . . . LG 938–939
Bobcat, ruedas . . . . . LG 1029–1046
Bobcat, ruedas intermedias . . . . . LG 825–826
Bobcat, ruedas/rodillos antidesbroce . . . . . LG 1037–1042
Bobcat, vástagos . . . . . LG 874–875
Bobinas de encendido . . . . . LG 784–787
Bobinas de encendido, Briggs & Stratton . . . . . LG 784–787
Bobinas de encendido, Honda . . . . . LG 784–787
Bobinas de encendido, Husqvarna . . . . . LG 784–787
Bobinas de encendido, Kohler . . . . . LG 784–787
Bobinas de encendido, Lawn-Boy . . . . . LG 784–787
Bobinas de encendido, Robin . . . . . LG 784–787
Bobinas de encendido, Stihl . . . . . LG 784–787
Bobinas de encendido, Tecumseh . . . . . LG 784–787
Bobinas de magneto . . . . . LG 784–787
Bobinas, encendido . . . . . LG 784–787
Bobinas, magneto . . . . . LG 784–787
Bolens, cuchillas . . . . . LG 388–390
Bolens, ruedas/rodillos antidesbroce . . . . . LG 1037–1042
Bolsa de herramientas . . . . . OPE 23
**BOLSAS PARA CÉSPED . . . . . LG 781–782**
Bomba de combustible . . . . . LG 767
Bomba de sifón, combustibles VP . . . . . SFS 81
Bomba, combustible . . . . . LG 767
Boquillas de combustible . . . . . LG 765
Boquillas de engrase, empaques de exhibición . . . . . LG 800
Boquillas de engrase, surtido . . . . . SFS 101
Boquillas, combustible . . . . . LG 765–766
Bordeadora EG120VX, 120V Professional Series™ . . . . . OPE 35
Bordeadora EG600, multiaccesorios sin cable . . . . . OPE 13
Borne de la batería de plomo . . . . . LG 743
Botas de caucho para uso en bosques . . . . . SFS 113
Botas de piel de primera calidad . . . . . SFS 113
Botas de piel, primera calidad . . . . . SFS 113
Botas, caucho para uso en bosques . . . . . SFS 113
Botas, piel de primera calidad . . . . . SFS 113
Botón de conducto de cable del acelerador . . . . . LG 721
Brazo de dirección, MTD . . . . . LG 939
Brazos del elevador . . . . . LG 794
Brazos estabilizadores . . . . . LG 793
Briggs & Stratton, anillos . . . . . LG 750
Briggs & Stratton, anillos de pistones . . . . . LG 750
Briggs & Stratton, arrancadores manuales . . . . . LG 923
Briggs & Stratton, bielas . . . . . LG 750
Briggs & Stratton, bielas . . . . . LG 750
Briggs & Stratton, bobinas de arranque . . . . . LG 784–787
Briggs & Stratton, carburadores . . . . . LG 596
Briggs & Stratton, Cubas del flotador del carburador . . . . . LG 625
Briggs & Stratton, diafragmas del carburador . . . . . LG 622–623
Briggs & Stratton, embrague del arrancador . . . . . LG 929
Briggs & Stratton, empaquetaduras . . . . . LG 745–749
Briggs & Stratton, engranajes del arrancador eléctrico . . . . . LG 927–928
Briggs & Stratton, escobillas del arrancador eléctrico . . . . . LG 927
Briggs & Stratton, filtros de aceite . . . . . LG 814–819
Briggs & Stratton, filtros de aire de espuma . . . . . LG 185–189
Briggs & Stratton, filtros de aire de papel . . . . . LG 179–185
Briggs & Stratton, filtros de combustible en el conducto . . . . . LG 774–776
Briggs & Stratton, flotadores del carburador . . . . . LG 624
Briggs & Stratton, juegos de carburadores . . . . . LG 602–604
Briggs & Stratton, juegos de empaquetaduras . . . . . LG 745
Briggs & Stratton, manija de arranque . . . . . LG 930
Briggs & Stratton, motores de arranque . . . . . LG 915–916
Briggs & Stratton, peras cebadoras . . . . . LG 629–632
Briggs & Stratton, platinos y condensador . . . . . LG 789
Briggs & Stratton, poleas del arranque manual . . . . . LG 933
Briggs & Stratton, propulsores del arrancador eléctrico . . . . . LG 926–927
Briggs & Stratton, reguladores de voltaje . . . . . LG 731
Briggs & Stratton, resortes del arranque manual . . . . . LG 927
Briggs & Stratton, sellos . . . . . LG 749
Briggs & Stratton, sellos de aceite . . . . . LG 749
Briggs & Stratton, silenciadores . . . . . LG 806–807

Briggs & Stratton, tabla de referencia rápida . . . LG 1048–1071
Briggs & Stratton, tapas de combustible . . . LG 770
Briggs & Stratton, tapón de llenado de aceite . . . LG 750
Briggs & Stratton, trinquetes y resortes de arranque . . . LG 930–931
Briggs & Stratton, válvulas de aguja de admisión del carburador . . . LG 628
Broche de cortocircuito para bujías . . . LG 867
Broche de cortocircuito, bujías . . . LG 867
Buje del depósito de combustible . . . LG 767
Bujes EHP . . . LG 227–228
Bujes K&S . . . LG 238
Bujes para maquinaria . . . SFS 106
Bujes Scag . . . LG 244
Bujes Simplicity . . . LG 244–245
Bujes Snapper . . . LG 245–246
Bujes, AMF . . . LG 243
Bujes, Ariens . . . LG 225–227
Bujes, AYP . . . LG 227–228
Bujes, Bobcat . . . LG 228–230
Bujes, Bunton . . . LG 230
Bujes, Cub Cadet . . . LG 231-232
Bujes, EHP . . . LG 227–228
Bujes, Encore . . . LG 232
Bujes, Exmark . . . LG 233-234
Bujes, Grasshopper . . . LG 234–235
Bujes, Gravely . . . LG 235
Bujes, John Deere . . . LG 237–238
Bujes, K&S . . . LG 238
Bujes, maquinaria . . . SFS 106
Bujes, MTD . . . LG 239–242
Bujes, Murray . . . LG 242–243
Bujes, Noma . . . LG 243
Bujes, Roper . . . LG 227–228
Bujes, Sears . . . LG 227–228
**BUJÍAS . . . LG 864–867**
Bunton, bujes . . . LG 230
Bunton, cojinetes . . . LG 230
Bunton, correas . . . LG 269–270
Bunton, cuchillas . . . LG 390–392
Bunton, embragues eléctricos TDF . . . LG 733–741
Bunton, interruptores de seguridad . . . LG 947–948
Bunton, interruptores TDF . . . LG 946–947
Bunton, ruedas . . . LG 1029–1046
Bunton, ruedas intermedias . . . LG 826–827
Bunton, vástagos . . . LG 874–875
Bush Hog, correas . . . LG 270–271
Bush Hog, cuchillas . . . LG 392–394
Bush Hog, vástagos . . . LG 876–877


## C


Cabezal de cortadora para OPE . . . OPE 26
Cabezal de cortadoras de carga rápida . . . OPE 26
Cabezal de cortadoras Gator® SpeedLoad™ . . . LG 968–978
Cabezal de corte ST275 . . . OPE 26
Cabezal eléctrico PH600, multiaccesorios sin cable . . . OPE 12
Cabezales de cortadora, alimentación manual . . . LG 995
Cabezales de cortadora, alimentación por impacto . . . LG 985–994
Cabezales de cortadora, cabezal cortador Lightning Load™ . . . LG 985
Cabezales de cortadora, cabezal cortador Pivotrim™ . . . LG 996
Cabezales de cortadora, cabezal cortador Speed-Feed™ . . . LG 986–987
Cabezales de cortadora, cabezal de corte de línea fija . . . LG 996
Cabezales de cortadora, cabezal Kwik Loader™ Jet-Fit Express . . . LG 995
Cabezales de cortadora, cabezales Jet Fit™ . . . LG 995
Cabezales de cortadora, Gator® SpeedLoad™ . . . LG 968–978
Cabezales de cortadora, Magnum Gatorhead™ de 4" de alto rendimiento . . . LG 989
Cabezales de cortadora, Magnum Gatorhead™ de 6" de alto rendimiento . . . LG 990
Cabezales de cortadora, repuesto para Stihl 25-2 Auto Cut . . . LG 988
Cabezales de cortadora, tabla de aplicación . . . LG 997–1013
Cabezales largos, Honda . . . LG 755
Cable de herramienta de bastón, 120V Professional Series™ . . . OPE 36
Cable principal . . . LG 742
Cable, principal . . . LG 742
Cables de cebador . . . LG 701–720
**CABLES DE CONTROL . . . LG 699–723**
Cables de control auto propulsados . . . LG 701–720
Cables de control de presión y tracción . . . LG 720–721
Cables de control para propulsión . . . LG 701–720
Cables de control, AYP . . . LG 701–703
Cables de control, Bobcat . . . LG 703
Cables de control, Cub Cadet . . . LG 703–708
Cables de control, Dixie Chopper . . . LG 708
Cables de control, Excel . . . LG 708
Cables de control, Gravely . . . LG 708
Cables de control, Honda . . . LG 708–709
Cables de control, Hustler . . . LG 708
Cables de control, John Deere . . . LG 709
Cables de control, McClane . . . LG 709
Cables de control, MTD . . . LG 710–715
Cables de control, Murray . . . LG 715–717
Cables de control, presión y tracción . . . LG 720–721
Cables de control, Scag . . . LG 717–718
Cables de control, Snapper . . . LG 718–719
Cables de control, Toro . . . LG 719–720
Cables de control, universales . . . LG 699–701
Cables de control, Wisconsin . . . LG 720
Cables de freno . . . LG 701–720
Cables de seguridad de zona . . . LG 701–720
Cables del acelerador . . . LG 701–720
Cables para acoplamiento de plataforma . . . LG 701–720
Cables TDF . . . LG 701–720
Cables, acelerador . . . LG 701–720
Cables, acoplamiento de plataforma . . . LG 701–720
Cables, batería . . . LG 744
Cables, cebador . . . LG 701–720
Cables, control . . . LG 701–720
Cables, control autopropulsado . . . LG 701–720
Cables, control de accionamiento . . . LG 701–720
Cables, control de barrena de lanzador de nieve . . . LG 701–720
Cables, control de dirección de lanzador de nieve . . . LG 701–720
Cables, control de tubo de descarga de lanzador de nieve . . . LG 701–720
Cables, freno . . . LG 701–720
Cables, TDF (Toma De Fuerza) . . . LG 701–720
**CADENA DE MOTOSIERRA . . . FOR 103–147**
Cadena de motosierra de poste inalámbrica PS250 . . . OPE 25
Cadena de motosierra, afiladores automáticos de cadenas . . . SFS 32–40
Cadena de motosierra, características . . . FOR 108–109
Cadena de rodillo . . . LG 676
Cadena de rodillo, eslabones de ajuste . . . LG 676
Cadena de rodillo, eslabones de conexión . . . LG 676
Cadena de rodillo, medio eslabones . . . LG 676
Cadena para motosierra de poste . . . OPE 20
Cadena, cadena de motosierra . . . FOR 103–147
Cadena, eslabones de ajuste de rodillo . . . LG 676
Cadena, eslabones de conexión de rodillo . . . LG 676
Cadena, medios eslabones de rodillo . . . LG 676
Cadenas para neumáticos . . . LG 965
Cadenas, neumático . . . LG 965
Cajas para depósito de piezas . . . SFS 21
Cajas, cuchillas cortadoras de césped . . . SFS 21
Cajas, depósito de piezas . . . SFS 21
Calibrador de espesores . . . SFS 65
Calibrador, espesores . . . SFS 65
Cámaras para neumáticos . . . LG 956–957
Cámaras, neumáticos . . . LG 956–957
Cambiador de neumáticos . . . SFS 69
Cambiador de neumáticos Oregon® . . . SFS 69
Carburadores completos para reemplazo . . . LG 595–601
Carburadores Walbro . . . LG 595
**CARBURADORES Y PIEZAS DE CARBURADORES . . . LG 594–674**
Carburadores Yamakoyo . . . LG 601
Carburadores, Briggs & Stratton . . . LG 596
Carburadores, completos . . . LG 595–601
Carburadores, Honda . . . LG 596–597
Carburadores, Robin . . . LG 596
Carburadores, Tecumseh . . . LG 598–601
Carburadores, Tillotson . . . LG 595
Carburadores, Walbro . . . LG 595
Carburadores, Yamakoyo . . . LG 601
Carburadores, Zama . . . LG 595
Cargador C1600, 120V Professional Series™ . . . OPE 36
Cargador de baterías C600 . . . OPE 10
Cargador de baterías rápido . . . OPE 10
Cargador de baterías rápido C750 . . . OPE 10
Cargador, batería . . . LG 743
Caroni, cuchillas . . . LG 395
Caroni, vástagos . . . LG 877
Cartuchos de grasa . . . SFS 12
Casco de seguridad . . . SFS 112
Casco para lluvia . . . SFS 115
Casco, seguridad . . . SFS 112
Catálogo Oregon® . . . SFS 23
Catálogo, Oregon® . . . SFS 23
Cebadores . . . LG 629–632

# 2019 Índice Alfabético – ES


Cedazos para el combustible . . . . . LG 627
Chaparreras . . . . . SFS 114
Chaqueta para lluvia . . . . . SFS 115
Chavetas de acoplador, empaques de exhibición . . . . . LG 799
Chavetas de sujeción . . . . . LG 795
Chicago Electric, aplicaciones de barra y cadena . . . . . FOR 22
Cierre, conducto de combustible . . . . . LG 766–767
Cierres del conducto del combustible . . . . . LG 766–767
Cilindros amortiguadores . . . . . LG 695
Cinta de freno, Scag . . . . . LG 698
Cinta de freno, Snapper . . . . . LG 698
Clavijas . . . . . LG 803
Clavijas . . . . . LG 794
Club Car, correas . . . . . LG 272
Cojinete de rodillo cónico . . . . . LG 223
Cojinete de rodillo enjaulado . . . . . LG 223
Cojinetes de bolas . . . . . LG 223–224
Cojinetes de bolas Oregon® Magnum . . . . . LG 224
Cojinetes de ruedas . . . . . LG 223–224
Cojinetes de ruedas bridadas . . . . . LG 224
Cojinetes del extremo de la biela . . . . . LG 804
Cojinetes EHP . . . . . LG 227–228
Cojinetes K&S . . . . . LG 238
**COJINETES Y RODAMIENTOS . . . . . LG 223–249**
Cojinetes, AMF . . . . . LG 243
Cojinetes, Ariens . . . . . LG 225–227
Cojinetes, AYP . . . . . LG 227–228
Cojinetes, Bobcat . . . . . LG 228–230
Cojinetes, bola . . . . . LG 223–224
Cojinetes, Bunton . . . . . LG 230
Cojinetes, Cub Cadet . . . . . LG 231-232
Cojinetes, Dixon . . . . . LG 232
Cojinetes, EHP . . . . . LG 227–228
Cojinetes, Encore . . . . . LG 232
Cojinetes, Exmark . . . . . LG 233-234
Cojinetes, extremo de la biela . . . . . LG 804
Cojinetes, Ferris . . . . . LG 234
Cojinetes, Grasshopper . . . . . LG 234–235
Cojinetes, Gravely . . . . . LG 235
Cojinetes, Honda . . . . . LG 235
Cojinetes, Hustler . . . . . LG 236
Cojinetes, Jacobsen . . . . . LG 236–237
Cojinetes, John Deere . . . . . LG 237–238
Cojinetes, K&S . . . . . LG 238
Cojinetes, lanzadores de nieve . . . . . LG 853–855
Cojinetes, Lawn-Boy . . . . . LG 238–239
Cojinetes, Little Wonder . . . . . LG 239
Cojinetes, McLane . . . . . LG 239
Cojinetes, MTD . . . . . LG 239–242
Cojinetes, Murray . . . . . LG 242–243
Cojinetes, Noma . . . . . LG 243
Cojinetes, Oregon® Magnum, bola . . . . . LG 224
Cojinetes, rodillo cónico . . . . . LG 223
Cojinetes, rodillo enjaulado . . . . . LG 223
Cojinetes, Roper . . . . . LG 227–228
Cojinetes, rueda . . . . . LG 223–224
Cojinetes, rueda bridada . . . . . LG 224
Cojinetes, Scag . . . . . LG 244
Cojinetes, Sears . . . . . LG 227–228
Cojinetes, Simplicity . . . . . LG 244–245
Cojinetes, Snapper . . . . . LG 245–246
Cojinetes, Toro . . . . . LG 247
Cojinetes, Yazoo . . . . . LG 248
Colector de drenaje de aceite . . . . . SFS 67
Colector de drenaje, aceite . . . . . SFS 67
Collares de eje, empaques de exhibición . . . . . LG 801
Combinaciones de motosierras, barras y cadenas . . . . . FOR 100–101
Combustible Fix-It, combustibles VP . . . . . SFS 81
Combustible sin etanol, VP Fuels . . . . . SFS 79–81
Combustibles VP, bomba de sifón . . . . . SFS 81
Combustibles VP, combustible Fix-it . . . . . SFS 81
Combustibles VP, combustible libre de etanol . . . . . SFS 79–81
Combustibles VP, pico de combustible . . . . . SFS 81
Comet, correas . . . . . LG 272
Compresor de anillo . . . . . SFS 66
Compresor de anillo de pistón . . . . . SFS 66
Compresor de resorte para válvula . . . . . SFS 66
Compresor, anillos . . . . . SFS 66
Compresor, resorte de válvula . . . . . SFS 66
Comprobantes de mantenimiento . . . . . SFS 21
Comprobantes, mantenimiento . . . . . SFS 21
Conducto de combustible . . . . . LG 761–763
Conducto de combustible Oregon® . . . . . LG 761
Conducto de combustible Tygon® . . . . . LG 761
**CONDUCTO DE COMBUSTIBLE Y ACCESORIOS. . . . . LG 761–780**
Conducto de combustible, Oregon® . . . . . LG 761
Conducto de combustible, Tygon® . . . . . LG 761
Conducto del cable externo del acelerador, rodillo . . . . . LG 721
Conducto, combustible . . . . . LG 761–763
Conductos de combustible, motosierras . . . . . LG 688–690
Conectores y bornes eléctricos, surtido . . . . . SFS 100
Conjuntos de ruedas neumáticas . . . . . LG 1044–1046
Conjuntos del sistema de combustible . . . . . LG 764–765
Conjuntos semineumáticos de ruedas sin pinchaduras . . . . . LG 1044–1046
Corona Clipper, aplicaciones de barra y cadena . . . . . FOR 23
Correa del tanque de combustible, Scag . . . . . LG 698
Correa para cortadora, universal . . . . . LG 1027
Correa universal para cortadora . . . . . LG 1027
**CORREAS. . . . . LG 250–339**
Correas Bad Boy . . . . . LG 266–267
Correas de bloqueo de la campana de la cortadora . . . . . LG 803
Correas de bloqueo, campanas de cortadora . . . . . LG 803
Correas de cuerda de aramida de primera calidad . . . . . LG 334–335
Correas industriales de cuerda de poliéster . . . . . LG 336–337
Correas Manco . . . . . LG 300
Correas Polaris ATV . . . . . LG 310
Correas, AMF . . . . . LG 259
Correas, Ariens . . . . . LG 264–266
Correas, AYP . . . . . LG 259–264
Correas, Bad Boy . . . . . LG 266–267
Correas, Bobcat . . . . . LG 267–269
Correas, Bunton . . . . . LG 269–270
Correas, Bush Hog . . . . . LG 270–271
Correas, Club Car . . . . . LG 272
Correas, Comet . . . . . LG 272
Correas, Country Clipper . . . . . LG 272
Correas, Craftsman . . . . . LG 315
Correas, Cub Cadet . . . . . LG 273–277
Correas, cuerda de aramida de primera calidad . . . . . LG 334–335
Correas, cuerda de poliéster industrial . . . . . LG 336–337
Correas, Dixie Chopper . . . . . LG 277
Correas, Dixon . . . . . LG 278
Correas, Dynamark . . . . . LG 278
Correas, E-Z Roll . . . . . LG 278
Correas, Encore . . . . . LG 278
Correas, Excel . . . . . LG 279
Correas, Exmark . . . . . LG 279–283
Correas, EZ-Go . . . . . LG 283
Correas, Ferris . . . . . LG 283–284
Correas, Grasshopper . . . . . LG 284–285
Correas, Gravely . . . . . LG 285–287
Correas, Great Dane . . . . . LG 287–288
Correas, Honda . . . . . LG 288
Correas, Husqvarna . . . . . LG 288–292
Correas, Hustler . . . . . LG 279
Correas, John Deere . . . . . LG 292–297
Correas, Kees . . . . . LG 297
Correas, King Kutter . . . . . LG 298
Correas, Kubota . . . . . LG 298–299
Correas, lanzador de nieve . . . . . LG 862–863
Correas, Lawn-Boy . . . . . LG 299
Correas, Lesco . . . . . LG 299
Correas, Little Wonder . . . . . LG 300
Correas, Manco . . . . . LG 300
Correas, Massey Fergunson . . . . . LG 300
Correas, McClane . . . . . LG 300
Correas, MTD . . . . . LG 300–306
Correas, Murray . . . . . LG 306–309
Correas, Noma . . . . . LG 309–310
Correas, Partner . . . . . LG 310
Correas, Polaris ATV . . . . . LG 310
Correas, Poulan Pro . . . . . LG 311
Correas, Power Trim . . . . . LG 311
Correas, Roper . . . . . LG 311–312
Correas, Scag . . . . . LG 312–314
Correas, Scotts . . . . . LG 315
Correas, Sears . . . . . LG 315
Correas, sierras abrasivas . . . . . LG 684
Correas, Simplicity . . . . . LG 316
Correas, Snapper . . . . . LG 316–319
Correas, Stihl . . . . . LG 320
Correas, Toro . . . . . LG 320–323
Correas, Troy-Bilt . . . . . LG 324
Correas, Walker . . . . . LG 325

Correas, Woods . . . LG 325–330
Correas, Wright Stander . . . LG 330–331
Correas, Yazoo . . . LG 297
Cortador de arbustos HT250, eléctrico inalámbrico . . . OPE 21
Cortador, tanza de cortadora de bordes . . . LG 985
Cortador/bordeador . . . OPE 19
Cortador/bordeador ST275 . . . OPE 19
Cortador/bordeador, ST275 Oregon® 40V MAX . . . OPE 19
Cortadora de arbustos, HT250 Oregon® 40V MAX inalámbrica . . . OPE 21
Cortadora de césped comercial, espaciadores y bujes . . . LG 697
Cortadora de césped comercial, motores de ruedas . . . LG 696
Cortadora de césped comercial, piezas para ruedas pivotantes . . . LG 694–695
Cortadoras de césped, accesorios para afiladoras de cuchillas . . . SFS 62
Cortadoras de césped, afiladoras de cuchillas . . . SFS 58–63
Cortadoras de césped, afiladores de cuchillas . . . SFS 58–63
Cortadoras de césped, asientos . . . LG 842–844
Cortadoras de césped, cajas de cuchillas . . . SFS 21
Cortadoras de césped, equilibradores de cuchillas . . . SFS 63
Cortadoras de césped, herramienta para nivelación de plataforma . . . SFS 63
Cortadoras de césped, piezas de repuesto para afiladoras de cuchillas . . . SFS 62
Cortadoras de césped, rampas . . . SFS 64
Cortadoras de césped, sulkies . . . SFS 77–78
Cortadoras de troncos, cuña de 4 lados . . . OPE 47
Cortasetos eléctrico BHT120VX, 120V Professional Series™ . . . OPE 34
Cortasetos eléctrico HT600, multiaccesorios sin cable . . . OPE 13
Corte, cadena de la motosierra . . . FOR 103–147
Country Clipper, correas . . . LG 272
Country Clipper, cuchillas . . . LG 395–397
Craftsman, correas . . . LG 315
Craftsman, cuchillas . . . LG 397–404
Cub Cadet, aplicaciones de barra y cadena . . . FOR 25
Cub Cadet, aplicaciones de rueda dentada . . . FOR 187
Cub Cadet, arrancadores de 120V para lanzadores de nieve . . . LG 861
Cub Cadet, arrancadores manuales para lanzadores de nieve . . . LG 860–861
Cub Cadet, bujes . . . LG 231-232
Cub Cadet, bujes para lanzadores de nieve . . . LG 854–855
Cub Cadet, cables de control . . . LG 703–708
Cub Cadet, cables de control para lanzadores de nieve . . . LG 856–859
Cub Cadet, cebador para lanzadores de nieve . . . LG 860
Cub Cadet, cojinetes . . . LG 231-232
Cub Cadet, cojinetes para lanzadores de nieve . . . LG 854–855
Cub Cadet, correas . . . LG 273–277
Cub Cadet, cuchillas . . . LG 404–412
Cub Cadet, embragues eléctricos TDF . . . LG 733–741
Cub Cadet, engranaje de bronce de lanzadores de nieve . . . LG 856
Cub Cadet, gatillo de control de dirección para lanzadores de nieve . . . LG 856
Cub Cadet, guarda de brida de tubo de descarga para lanzadores de nieve . . . LG 855
Cub Cadet, guía basculante de tubo de descarga para lanzadores de nieve . . . LG 856
Cub Cadet, interruptores de encendido . . . LG 942–945
Cub Cadet, interruptores de seguridad . . . LG 947–948
Cub Cadet, interruptores TDF . . . LG 946–947
Cub Cadet, juegos de carburador para lanzadores de nieve . . . LG 859
Cub Cadet, juegos de carburadores . . . LG 604–605
Cub Cadet, leva de bloqueo del embrague para lanzadores de nieve . . . LG 856
Cub Cadet, llaves de encendido para lanzadores de nieve . . . LG 861
Cub Cadet, placa de bloqueo para lanzadores de nieve . . . LG 856
Cub Cadet, placas de barrido para lanzadores de nieve . . . LG 848
Cub Cadet, poleas de propulsión . . . LG 837
Cub Cadet, rueda para lanzadores de nieve . . . LG 856
Cub Cadet, ruedas intermedias . . . LG 826–827
Cub Cadet, ruedas/rodillos antidesbroce . . . LG 1037–1042
Cub Cadet, silenciadores . . . LG 807
Cub Cadet, vástagos . . . LG 878–883
Cuba de sedimentos . . . LG 765
Cuba del filtro . . . LG 765
Cubas del flotador del carburador . . . LG 625
Cubas del flotador del carburador, Briggs & Stratton . . . LG 625
Cubas del flotador del carburador, Honda . . . LG 625
Cubas del flotador del carburador, Tecumseh . . . LG 625
Cubas del flotador, carburadores . . . LG 625
Cubierta del tractor-podadora . . . LG 803
Cubierta, borne de la batería . . . LG 743
Cubierta, tractor-podadora . . . LG 803
Cubiertas, barras de motosierras . . . SFS 13
Cuchillas cortadoras de matorrales . . . LG 1014
Cuchillas cortadoras de matorrales, herramientas de limar . . . LG 1015
Cuchillas de cortadora de bordes, universal . . . LG 588–589
**CUCHILLAS DE CORTADORAS DE BORDES . . . LG 584–590**
Cuchillas de cortadoras de bordes Weed Eater . . . LG 588
Cuchillas de cortadoras de bordes, Ariens . . . LG 584
Cuchillas de cortadoras de bordes, Black & Decker . . . LG 584
Cuchillas de cortadoras de bordes, Earth Quake . . . LG 584
Cuchillas de cortadoras de bordes, Echo . . . LG 584
Cuchillas de cortadoras de bordes, Homelite . . . LG 584
Cuchillas de cortadoras de bordes, Husqvarna . . . LG 585
Cuchillas de cortadoras de bordes, Jacobsen . . . LG 585
Cuchillas de cortadoras de bordes, John Deere . . . LG 585
Cuchillas de cortadoras de bordes, Kawasaki . . . LG 585
Cuchillas de cortadoras de bordes, Lawn-Boy . . . LG 585
Cuchillas de cortadoras de bordes, Lesco . . . LG 585
Cuchillas de cortadoras de bordes, Little Wonder . . . LG 585
Cuchillas de cortadoras de bordes, Maruyama . . . LG 586
Cuchillas de cortadoras de bordes, McClane . . . LG 586
Cuchillas de cortadoras de bordes, McCulloch . . . LG 586
Cuchillas de cortadoras de bordes, MTD . . . LG 586
Cuchillas de cortadoras de bordes, Power Trim . . . LG 586
Cuchillas de cortadoras de bordes, RedMax . . . LG 587
Cuchillas de cortadoras de bordes, Ryobi . . . LG 587
Cuchillas de cortadoras de bordes, Sears . . . LG 587
Cuchillas de cortadoras de bordes, Shindaiwa . . . LG 587
Cuchillas de cortadoras de bordes, Stihl . . . LG 587
Cuchillas de cortadoras de bordes, Tanaka . . . LG 588
Cuchillas de cortadoras de bordes, Troy-Bilt . . . LG 588
Cuchillas de cortadoras de bordes, Weed Eater . . . LG 588
Cuchillas de desbroce . . . LG 368
Cuchillas de desmalezadora . . . LG 368
Cuchillas de la sierra de desbroce . . . LG 1014
**CUCHILLAS PARA CORTADORAS DE ARBUSTOS . . . LG 783**
**CUCHILLAS UNIVERSALES . . . LG 368**
Cuchillas, Allis-Chalmers . . . LG 369
Cuchillas, Ariens . . . LG 369–374
Cuchillas, AYP . . . LG 374–382
Cuchillas, barras guía para motosierras . . . FOR 148–179
Cuchillas, Befco . . . LG 382
Cuchillas, Better Outdoors . . . LG 383
Cuchillas, Big Bee . . . LG 384
Cuchillas, Billy Goat . . . LG 590
Cuchillas, Bluebird . . . LG 590
Cuchillas, Bobcat . . . LG 384–388
Cuchillas, Bolens . . . LG 388–390
Cuchillas, Bunton . . . LG 390–392
Cuchillas, Bush Hog . . . LG 392–394
Cuchillas, Caroni . . . LG 395
Cuchillas, cortadora de bordes . . . LG 584–590
Cuchillas, cortadoras de arbustos . . . LG 783
Cuchillas, cortadoras de césped . . . LG 369–583
Cuchillas, cortadoras de matorrales . . . LG 1014
Cuchillas, cortadoras de matorrales y pasto . . . LG 1014
Cuchillas, Country Clipper . . . LG 395–397
Cuchillas, Craftsman . . . LG 397–404
Cuchillas, Cub Cadet . . . LG 404–412
Cuchillas, desbroce . . . LG 368
Cuchillas, desmalezadora . . . LG 368
Cuchillas, Dixie Chopper . . . LG 413–416
Cuchillas, Dixon . . . LG 416–428
Cuchillas, DR . . . LG 428–430
Cuchillas, DR . . . LG 428–430
Cuchillas, Dynamow . . . LG 430
Cuchillas, Encore . . . LG 431–434
Cuchillas, Everide . . . LG 434
Cuchillas, Excel . . . LG 470–475
Cuchillas, Exmark . . . LG 434–443
Cuchillas, Ferris . . . LG 443–446
Cuchillas, Ford/New Holland . . . LG 447
Cuchillas, Giant Vac . . . LG 447–448
Cuchillas, Goodall . . . LG 390–392
Cuchillas, Grasshopper . . . LG 448–450
Cuchillas, Gravely . . . LG 450–456
Cuchillas, Great Dane . . . LG 456–457
Cuchillas, Honda . . . LG 457–458
Cuchillas, Huskee . . . LG 458
Cuchillas, Husqvarna . . . LG 458–470
Cuchillas, Hustler . . . LG 470–475
Cuchillas, Ingersoll . . . LG 475
Cuchillas, Jacobsen . . . LG 476–482
Cuchillas, John Deere . . . LG 482–493
Cuchillas, Kees . . . LG 494–497
Cuchillas, King Kutter . . . LG 497
Cuchillas, Kubota . . . LG 497–501
Cuchillas, Land Pride . . . LG 501–503
Cuchillas, Lastec . . . LG 503–504
Cuchillas, Lawn-Boy . . . LG 505
Cuchillas, Lesco . . . LG 505–508
Cuchillas, Massey Fergunson . . . LG 508–511

# 2019 Índice Alfabético – ES


Cuchillas, MTD . . . LG 512–521
Cuchillas, Murray . . . LG 522–528
Cuchillas, Poulan . . . LG 529–533
Cuchillas, Power Trim . . . LG 586
Cuchillas, Redhawk . . . LG 534–535
**CUCHILLAS,** repuestos idénticos del fabricante original (OEM) **LG 369–583**
Cuchillas, Scag . . . LG 535–537
Cuchillas, Scotts . . . LG 537–539
Cuchillas, sierra de desbroce cortadora de matorrales . . . LG 1014
Cuchillas, Simplicity . . . LG 539–545
Cuchillas, Snapper . . . LG 545–556
Cuchillas, Spartan . . . LG 557
Cuchillas, Steiner . . . LG 557–558
Cuchillas, Sutech . . . LG 559
Cuchillas, Swisher . . . LG 559
Cuchillas, Toro . . . LG 560–573
Cuchillas, Troy-Bilt . . . LG 573–576
Cuchillas, universal . . . LG 368
Cuchillas, Walker . . . LG 576
Cuchillas, Woods . . . LG 577–579
Cuchillas, Wright Stander . . . LG 579–582
Cuchillas, Zipper . . . LG 583
Cuerda de arrancador manual . . . LG 937
**CUERDA DE ARRANQUE . . . LG 937**
Cuerda, arranque . . . LG 937
Cuña de 4 lados, cortadoras de troncos . . . OPE 47
Cuña de tala . . . SFS 14
Cuñas, tala . . . SFS 14


## D


Dayton, aplicaciones para ruedas dentadas . . . FOR 187
Depósitos de combustible, Honda . . . LG 770
Depósitos, combustible . . . LG 770
Derretidor de nieve y hielo . . . SFS 97
Derretidor, nieve y hielo . . . SFS 97
Deslizaderas universales para lanzador de nieve . . . LG 849
Deslizaderas, lanzadores de nieve . . . LG 849–851
Desmalezadora ST120VX, 120V Professional Series™ . . . OPE 33
Desmalezadora ST600, multiaccesorios sin cable . . . OPE 13
DeWalt, aplicaciones de barras y cadenas . . . FOR 26
Diafragmas del carburador, Briggs & Stratton . . . LG 622–623
Diafragmas del carburador, Tecumseh . . . LG 623
Diafragmas, carburadores . . . LG 622–623
Diente del rociador . . . LG 590
Dientes de arado, Troy-Bilt . . . LG 954
Dientes, arado . . . LG 954
Diodos . . . LG 741
Disco de propulsión, lanzadores de nieve . . . LG 851
Discos de propulsión . . . LG 726
Dispositivo de seguridad, correa . . . LG 802
Dixie Chopper, cables de control . . . LG 708
Dixie Chopper, conjuntos semineumáticos de ruedas sin pinchaduras . . . LG 1044–1046
Dixie Chopper, correas . . . LG 277
Dixie Chopper, cuchillas . . . LG 413–416
Dixie Chopper, embragues eléctricos TDF . . . LG 733–741
Dixie Chopper, ruedas intermedias . . . LG 827
Dixie Chopper, vástagos . . . LG 883
Dixon, cojinetes . . . LG 232
Dixon, conjuntos de ruedas neumáticas . . . LG 1044–1046
Dixon, conjuntos semineumáticos de ruedas sin pinchaduras . . . LG 1044–1046
Dixon, correas . . . LG 278
Dixon, cuchillas . . . LG 416–428
Dixon, vástagos . . . LG 883–884
Dolmar, aplicaciones de barras y cadenas . . . FOR 26–29
Dolmar, aplicaciones para ruedas dentadas . . . FOR 187–188
Dolmar, resortes del arranque manual . . . LG 937
Dynamark, correas . . . LG 278
Dynamow, cuchillas . . . LG 430


## E


E-Z Roll, correas . . . LG 278
Earth Quake, cuchillas de cortadora de bordes . . . LG 584
Earthquake, aplicaciones de barras y cadenas . . . FOR 29
Earthwise, aplicaciones de barras y cadenas . . . FOR 29–30
Echo, aplicaciones de barras y cadenas . . . FOR 30–33
Echo, aplicaciones para ruedas dentadas . . . FOR 188–189
Echo, cuchillas de cortadoras de bordes . . . LG 584
Echo, filtros de aire . . . LG 189–191
Echo, piezas de cortadora y sopladora . . . LG 1016–1018
Echo, poleas de arranque manual . . . LG 933
Echo, resortes de arranque manual . . . LG 937
Echo, tapas de combustible . . . LG 770–771
Echo, trinquetes y resortes de arranque . . . LG 930–931
Efco, aplicaciones de barras y cadenas . . . FOR 33–35
Efco, aplicaciones para ruedas dentadas . . . FOR 189
Efco, filtros de aire . . . LG 210
Eje de dirección . . . LG 940
Eje de dirección, AYP . . . LG 940
Eje de dirección, Husqvarna . . . LG 940
Eje de dirección, MTD . . . LG 940
Eje, dirección . . . LG 940
Ejes de vástagos . . . LG 906–910
Ejes huecos . . . LG 906–910
Ejes huecos, cuchilla . . . LG 869–910
Ejes, huecos . . . LG 906–910
Ejes, MTD . . . LG 938
Ejes, vástagos . . . LG 906–910
Embrague de cuchilla, eléctrico . . . LG 733–741
Embrague eléctrico TDF . . . LG 733–741
Embrague TDF . . . LG 733–741
Embrague, TDF (toma de fuerza) eléctrica . . . LG 733–741
**EMBRAGUES CENTRÍFUGOS . . . LG 675**
Empaques de exhibición, anillos en E . . . LG 799
Empaques de exhibición, boquillas de engrase . . . LG 800
Empaques de exhibición, chavetas de acoplador . . . LG 799
Empaques de exhibición, chavetas de bloqueo . . . LG 800
Empaques de exhibición, collares de eje . . . LG 801
Empaques de exhibición, horquillas . . . LG 800
Empaques de exhibición, llaves de maquinaria . . . LG 801
Empaques de exhibición, llaves woodruff . . . LG 801
Empaques de exhibición, pasadores de chaveta . . . LG 799
Empaques de exhibición, pasadores de resorte . . . LG 801
Empaquetadura de admisión, motores de dos tiempos . . . LG 621
Empaquetadura, Kohler . . . LG 757
Empaquetadura, Tecumseh . . . LG 758–759
Empaquetaduras de la cuba del flotador . . . LG 626–627
Empaquetaduras de la cuba del flotador del carburador . . . LG 626–627
Empaquetaduras de la cuba del flotador del carburador, Briggs & Stratton . . . LG 627
Empaquetaduras de la cuba del flotador del carburador, Honda . . . LG 626–627
Empaquetaduras de la cuba del flotador del carburador, Lawn-Boy . . . LG 626–627
Empaquetaduras de la cuba del flotador del carburador, Oregon® . . . LG 626–627
Empaquetaduras de la cuba del flotador del carburador, Walbro . . . LG 627
Empaquetaduras de la cuba del flotador, Briggs & Stratton . . . LG 627
Empaquetaduras de la cuba del flotador, Honda . . . LG 626–627
Empaquetaduras de la cuba del flotador, Lawn-Boy . . . LG 626–627
Empaquetaduras de la cuba del flotador, Oregon® . . . LG 626–627
Empaquetaduras de la cuba del flotador, Walbro . . . LG 627
Empaquetaduras, admisión motor de 2 tiempos . . . LG 621
Empaquetaduras, Briggs & Stratton . . . LG 745–749
Empaquetaduras, Honda . . . LG 751–753
Empaquetaduras, surtido para admisión motor de 2 tiempos . . . SFS 103
Encore, bujes . . . LG 232
Encore, cojinetes . . . LG 232
Encore, correas . . . LG 278
Encore, cuchillas . . . LG 431–434
Encore, embragues eléctricos TDF . . . LG 733–741
Enginaire, filtros de aire de espuma . . . LG 203
Engranaje de sector de dirección, AYP . . . LG 941
Engranaje de sector de dirección, Husqvarna . . . LG 941
Engranajes de motor de propulsión . . . OPE 20
Engranajes, arrancadores eléctricos . . . LG 927–928
Enlaces de arrastre . . . LG 939
Equilibradores, cuchillas cortadoras de césped . . . SFS 63
**EQUIPO DE SEGURIDAD . . . SFS 108–121**
Escobillas, arrancadores eléctricos . . . LG 927
Eslabones de dirección . . . LG 939
Eslabones superiores . . . LG 794
**ESLABONES, GATOS Y ACCESORIOS . . . LG 792–801**
Espaciadores de vástagos . . . LG 910
Espaciadores, vástagos . . . LG 910
Estabilizador de combustible . . . SFS 85
Estabilizador, combustible . . . SFS 85
Estante, anteojos de seguridad . . . SFS 20
Everride, cuchillas . . . LG 434
Excel, cables de control . . . LG 708
Excel, correas . . . LG 279
Excel, cuchillas . . . LG 470–475
Excel, ruedas intermedias . . . LG 827
Excel, vástagos . . . LG 884
Exhibición de cortadoras de cadenas de motosierras OREGON® . . . SFS 23

Exhibición de cuchillas de cadena, cadena para motosierra Oregon® . . . . . SFS 23
Exhibición modular . . . . . SFS 4–6
Exmark, bujes . . . . . LG 233-234
Exmark, cojinetes . . . . . LG 233-234
Exmark, conjuntos de ruedas neumáticas . . . . . LG 1044–1046
Exmark, conjuntos semineumáticos de ruedas sin pinchaduras . . . . . LG 1044–1046
Exmark, correas . . . . . LG 279–283
Exmark, cuchillas . . . . . LG 434–443
Exmark, embragues eléctricos TDF . . . . . LG 733–741
Exmark, filtros de aire . . . . . LG 191
Exmark, interruptores de seguridad . . . . . LG 947–948
Exmark, interruptores TDF . . . . . LG 946–947
Exmark, poleas de propulsión . . . . . LG 836
Exmark, rótulas . . . . . LG 938–939
Exmark, ruedas intermedias . . . . . LG 827–828
Exmark, ruedas/rodillos antidesbroce . . . . . LG 1037–1042
Exmark, tapas de combustible . . . . . LG 771
Exmark, vástagos . . . . . LG 884–889
Extensión EX600, multiaccesorios sin cable . . . . . OPE 12
Extractor de aceite . . . . . SFS 67
Extractor de combustible . . . . . SFS 67
Extractor de engranaje . . . . . SFS 65
Extractor del volante . . . . . SFS 65
Extractor, aceite . . . . . SFS 67
Extractor, combustible . . . . . SFS 67
Extractor, engranaje . . . . . SFS 65
Extractor, volante . . . . . SFS 65
EZ-Go, correas . . . . . LG 283

## F

Fairmont Hydraulic, aplicaciones de barras y cadenas . . . . . FOR 35–36
Ferris, cojinetes . . . . . LG 234
Ferris, correas . . . . . LG 283–284
Ferris, cuchillas . . . . . LG 443–446
Ferris, ruedas/rodillos antidesbroce . . . . . LG 1037–1042
Ferris, vástagos . . . . . LG 889
Filtro de combustible, tipo cuba . . . . . LG 765
**FILTROS DE ACEITE . . . . . LG 814–819**
Filtros de aceite hidráulicos . . . . . LG 819
Filtros de aceite, Briggs & Stratton . . . . . LG 814–819
Filtros de aceite, Generac . . . . . LG 814–819
Filtros de aceite, Honda . . . . . LG 814–819
Filtros de aceite, Kawasaki . . . . . LG 814–819
Filtros de aceite, Kohler . . . . . LG 814–819
Filtros de aceite, Tecumseh . . . . . LG 814–819
**FILTROS DE AIRE. . . . . LG 178–222**
Filtros de aire, Ariens . . . . . LG 179
Filtros de aire, Briggs & Stratton, espuma . . . . . LG 185–189
Filtros de aire, Briggs & Stratton, papel . . . . . LG 179–185
Filtros de aire, Echo . . . . . LG 189–191
Filtros de aire, Efco . . . . . LG 210
Filtros de aire, Enginaire . . . . . LG 203
Filtros de aire, Exmark . . . . . LG 191
Filtros de aire, Homelite . . . . . LG 191–192
Filtros de aire, Honda, conjunto de la cubierta . . . . . LG 196
Filtros de aire, Honda, espuma . . . . . LG 195–196
Filtros de aire, Honda, papel . . . . . LG 192–194
Filtros de aire, Husqvarna . . . . . LG 197–198
Filtros de aire, Kawasaki, espuma . . . . . LG 201–203
Filtros de aire, Kawasaki, papel . . . . . LG 198–201
Filtros de aire, Kohler, espuma . . . . . LG 206–207
Filtros de aire, Kohler, papel . . . . . LG 203–206
Filtros de aire, Kubota . . . . . LG 208
Filtros de aire, Lawn-Boy . . . . . LG 209
Filtros de aire, Maruyama . . . . . LG 209
Filtros de aire, McCulloch . . . . . LG 209
Filtros de aire, Mitsubishi . . . . . LG 210
Filtros de aire, motosierras . . . . . LG 678–684
Filtros de aire, MTD . . . . . LG 210
Filtros de aire, Oleo-Mac . . . . . LG 210
Filtros de aire, Onan . . . . . LG 211
Filtros de aire, paquetes para taller . . . . . LG 178
Filtros de aire, Partner . . . . . LG 211
Filtros de aire, Poulan . . . . . LG 211–212
Filtros de aire, RedMax . . . . . LG 212
Filtros de aire, Shindaiwa . . . . . LG 212–213
Filtros de aire, sierras abrasiva . . . . . LG 678–684
Filtros de aire, Stihl . . . . . LG 213–216
Filtros de aire, Tecumseh, espuma . . . . . LG 219
Filtros de aire, Tecumseh, papel . . . . . LG 216–218
Filtros de aire, Toro . . . . . LG 219–220
Filtros de aire, Wheel Horse . . . . . LG 220
Filtros de aire, Wisconsin . . . . . LG 220
Filtros de aire, Wisconsin Robin . . . . . LG 220–222
Filtros de combustible del carburador . . . . . LG 627
Filtros de combustible en el conducto, Bobcat . . . . . LG 774–776
Filtros de combustible en el conducto, Briggs & Stratton . . . . . LG 774–776
Filtros de combustible en el conducto, John Deere . . . . . LG 774–776
Filtros de combustible en el conducto, Kawasaki . . . . . LG 774–776
Filtros de combustible en el conducto, Kohler . . . . . LG 774–776
Filtros de combustible en el conducto, Kubota . . . . . LG 774–776
Filtros de combustible en el conducto, Scag . . . . . LG 774–776
Filtros de combustible en el conducto, Snapper . . . . . LG 774–776
Filtros de combustible en el conducto, Tecumseh . . . . . LG 774–776
Filtros de combustible en el conducto, Toro . . . . . LG 774–776
Filtros de combustible en el depósito . . . . . LG 776–779
Filtros de combustible en el depósito, surtido . . . . . SFS 103
Filtros de combustible, dentro del depósito . . . . . LG 776–779
Filtros de combustible, en el conducto . . . . . LG 774–776
Filtros de combustible, motosierras . . . . . LG 691–692
Filtros, aceite . . . . . LG 814–819
Filtros, aceite hidráulico . . . . . LG 819
Filtros, aire . . . . . LG 178-222
Filtros, combustible en el conducto . . . . . LG 774–776
Flotadores del carburador . . . . . LG 624–625
Flotadores del carburador Oregon® . . . . . LG 624–625
Flotadores del carburador, Briggs & Stratton . . . . . LG 624
Flotadores del carburador, Honda . . . . . LG 624
Flotadores del carburador, Oregon® . . . . . LG 624–625
Flotadores del carburador, Tecumseh . . . . . LG 625
Flotadores, carburadores . . . . . LG 624–625
Ford/New Holland, cuchillas . . . . . LG 447
Freno, cuchilla . . . . . LG 802
Frontier, aplicaciones para ruedas dentadas . . . . . FOR 189
Fundas de bujías . . . . . LG 787–788
Fusibles . . . . . LG 742

## G

Gabinetes de almacenamiento de líquidos inflamables . . . . . SFS 89–90
Gabinetes de almacenamiento, líquidos inflamables . . . . . SFS 89–90
Gafas de seguridad . . . . . SFS 117–119
Gafas, seguridad . . . . . SFS 117–119
Gancho de exhibidor, 5" . . . . . SFS 20
Gatos . . . . . LG 796–798
Gatos, frontales . . . . . LG 796–798
Generac, filtros de aceite . . . . . LG 814–819
Giant Vac, cuchillas . . . . . LG 447–448
Gilson, vástagos . . . . . LG 891
Goodall, cuchillas . . . . . LG 390–392
Grasa "0" . . . . . LG 728
Grasa "00" . . . . . LG 728
Grasa de alta temperatura, cartucho de 14 oz . . . . . SFS 92
Grasa, alta temperatura, cartucho de 14oz . . . . . SFS 92
Grasshopper, bujes . . . . . LG 234–235
Grasshopper, cojinetes . . . . . LG 234–235
Grasshopper, conjuntos de ruedas neumáticas . . . . . LG 1044–1046
Grasshopper, correas . . . . . LG 284–285
Grasshopper, cuchillas . . . . . LG 448–450
Grasshopper, embragues eléctricos TDF . . . . . LG 733–741
Grasshopper, interruptores de seguridad . . . . . LG 947–948
Grasshopper, interruptores TDF . . . . . LG 946–947
Grasshopper, ruedas intermedias . . . . . LG 828
Grasshopper, ruedas/rodillos antidesbroce . . . . . LG 1037–1042
Grasshopper, vástagos . . . . . LG 890
Gravely, bujes . . . . . LG 235
Gravely, cables de control . . . . . LG 708
Gravely, cojinetes . . . . . LG 235
Gravely, conjuntos semineumáticos de ruedas sin pinchaduras . . . . . LG 1044–1046
Gravely, correas . . . . . LG 285–287
Gravely, cuchillas . . . . . LG 450–456
Gravely, embragues eléctricos TDF . . . . . LG 733–741
Gravely, interruptores de seguridad . . . . . LG 947–948
Gravely, interruptores TDF . . . . . LG 946–947
Gravely, ruedas/rodillos antidesbroce . . . . . LG 1037–1042
Gravely, silenciador . . . . . LG 807
Gravely, vástagos . . . . . LG 890–891
Great Dane, correas . . . . . LG 287–288
Great Dane, cuchillas . . . . . LG 456–457
Great Dane, embragues eléctricos TDF . . . . . LG 733–741
Great Dane, vástagos . . . . . LG 891

# 2019 Índice Alfabético – ES


Green Machine, poleas del arranque manual . . . . . LG 936
Green Machine, resortes del arranque manual . . . . . LG 937
Greenworks, aplicaciones de barras y cadenas . . . . . FOR 36–37
Guantes . . . . . SFS 116
Guía de limado profesional en montaje en barra, cadena para motosierra . . . . SFS 11
Guía de limas, cadena para motosierra. . . . . SFS 9


## H


Haz de cables de plástico . . . . . LG 723
Herramienta de calibración, cadena para motosierra. . . . . SFS 8
Herramienta de medición de correa . . . . . LG 331
Herramienta neumática, aceite . . . . . SFS 83
Herramienta para capacitación, cadena para motosierra. . . . . SFS 23
Herramienta para doblar el cable conductor del acelerador . . . . . LG 722
Herramienta para limpieza de surcos, barra de motosierra . . . . . SFS 14
Herramienta para nivelación de plataforma, cortadoras de césped . . . . . SFS 64
Herramienta para reparación de vástago de válvula de 4 vías . . . . . SFS 68
Herramienta Z-Bender para alambre del acelerador . . . . . SFS 66
Herramientas de afilado ruedas de afilar, afiladoras de cadena para motosierra SFS 41
Herramientas de afilado, ruedas de afilar para cadena para motosierra . . . . SFS 41
Herramientas de limar, cuchillas cortadoras de matorrales . . . . . LG 1015
Herramientas para neumáticos . . . . . SFS 69
**HERRAMIENTAS PARA TIENDAS . . . . . SFS 24–71**
Herramientas, tienda. . . . . SFS 24–71
Hidrolavadora con ahorrador de bomba, no aerosol . . . . . SFS 98
Hidrómetro, batería. . . . . LG 744
Hitachi, aplicaciones de barras y cadenas . . . . . FOR 37–38
Hoffco , resortes de arranque manual . . . . . LG 937
Homelite, aplicaciones de barras y cadenas . . . . . FOR 38–40
Homelite, aplicaciones para ruedas dentadas . . . . . FOR 189–190
Homelite, cuchillas de cortadora de bordes . . . . . LG 584
Homelite, filtros de aire . . . . . LG 191–192
Homelite, juego de carburadores . . . . . LG 605
Homelite, piezas de cortadora y sopladora . . . . . LG 1019
Homelite, poleas de arranque manual . . . . . LG 934
Homelite, resortes de arranque manual . . . . . LG 937
Homelite, tapas de combustible. . . . . LG 771
Honda, aisladores del carburador. . . . . LG 601
Honda, anillos. . . . . LG 754
Honda, anillos de pistones. . . . . LG 754
Honda, arrancadores manuales. . . . . LG 922–923
Honda, barras raspadoras para lanzadores de nieve . . . . . LG 847
Honda, bielas . . . . . LG 755
Honda, bielas . . . . . LG 755
Honda, bobinas de encendido . . . . . LG 784–787
Honda, cabezales largos. . . . . LG 755
Honda, cables de control. . . . . LG 708–709
Honda, carburadores. . . . . LG 596–597
Honda, cojinetes . . . . . LG 235
Honda, conjunto de la cubierta del filtro de aire . . . . . LG 196
Honda, correas . . . . . LG 288
Honda, cubas del flotador del carburador . . . . . LG 625
Honda, cuchillas . . . . . LG 457–458
Honda, depósitos de combustible. . . . . LG 770
Honda, deslizaderas para lanzador de nieve. . . . . LG 850
Honda, empaquetaduras. . . . . LG 751–753
Honda, filtros de aceite. . . . . LG 814–819
Honda, filtros de aire con espuma . . . . . LG 195–196
Honda, filtros de aire de papel. . . . . LG 192–194
Honda, flotadores del carburador. . . . . LG 624
Honda, interruptores de detención . . . . . LG 949
Honda, interruptores de encendido/apagado . . . . . LG 949
Honda, interruptores del sensor de aceite . . . . . LG 950
Honda, juegos de carburadores. . . . . LG 605
Honda, juegos de empaquetaduras. . . . . LG 751
Honda, manija de arranque . . . . . LG 930
Honda, motores de arranque . . . . . LG 918
Honda, paletas para lanzador de nieve . . . . . LG 846
Honda, pernos de cortar para lanzadores de nieve . . . . . LG 852–853
Honda, pistones. . . . . LG 754
Honda, poleas de arranque manual. . . . . LG 934
Honda, resortes de arranque manual. . . . . LG 937
Honda, ruedas . . . . . LG 1029–1046
Honda, sellos . . . . . LG 756
Honda, sellos de aceite . . . . . LG 756
Honda, silenciador . . . . . LG 807–808
Honda, sombreretes del arrancador . . . . . LG 929
Honda, tapas de combustible . . . . . LG 771
Honda, tapón de llenado de aceite . . . . . LG 756
Honda, tornillo central del arrancador . . . . . LG 929
Honda, trinquetes y resortes de arranque . . . . . LG 930–931
Honda, tubo de silenciador. . . . . LG 807–808
Honda, válvulas de admisión . . . . . LG 755
Honda, válvulas de aguja de admisión del carburador . . . . . LG 628–629
Honda, válvulas de escape . . . . . LG 755
Honda, varilla del aceite . . . . . LG 756
Horómetros . . . . . LG 741
Horómetros . . . . . LG 741
Horquilla ajustable . . . . . LG 805
Horquillas ajustables. . . . . LG 805
Horquillas, empaques de exhibición . . . . . LG 800
Horquillas, surtido . . . . . SFS 100
Huskee, cuchillas. . . . . LG 458
Husqvarna, adaptador del volante de dirección . . . . . LG 939
Husqvarna, adaptadores de cuchilla . . . . . LG 340
Husqvarna, aplicaciones de barras y cadenas. . . . . FOR 40–47
Husqvarna, aplicaciones para ruedas dentadas. . . . . FOR 190–193
Husqvarna, bobinas de encendido . . . . . LG 784–787
Husqvarna, buje de dirección . . . . . LG 941
Husqvarna, correas . . . . . LG 288–292
Husqvarna, cuchillas. . . . . LG 458–470
Husqvarna, cuchillas de cortadora de bordes . . . . . LG 585
Husqvarna, eje de dirección . . . . . LG 940
Husqvarna, embragues eléctricos TDF. . . . . LG 733–741
Husqvarna, engranaje del sector de dirección. . . . . LG 941
Husqvarna, enlaces de arrastre. . . . . LG 939
Husqvarna, eslabones de dirección. . . . . LG 939
Husqvarna, filtros de aire . . . . . LG 197–198
Husqvarna, interruptores de detención. . . . . LG 949
Husqvarna, interruptores de encendido . . . . . LG 942–945
Husqvarna, interruptores de encendido/apagado . . . . . LG 949
Husqvarna, pernos de cortar para lanzadores de nieve. . . . . LG 852–853
Husqvarna, piezas de cortadora y sopladora . . . . . LG 1020
Husqvarna, poleas de arranque manual . . . . . LG 934
Husqvarna, resortes de arranque manual . . . . . LG 937
Husqvarna, ruedas . . . . . LG 1029–1046
Husqvarna, soporte del eje de dirección . . . . . LG 939
Husqvarna, vástagos. . . . . LG 870–876
Hustler, cables de control . . . . . LG 708
Hustler, cojinetes. . . . . LG 236
Hustler, correas. . . . . LG 279
Hustler, cuchillas. . . . . LG 470–475
Hustler, embragues eléctricos TDF . . . . . LG 733–741
Hustler, ruedas intermedias. . . . . LG 827
Hustler, vástagos. . . . . LG 884


## I


Inflador de neumáticos aerosol con manguera . . . . . SFS 94
Inflador de neumáticos tipo calzador de talón Oregon® . . . . . SFS 70
Inflador de neumáticos tipo calzador de talón, Oregon® . . . . . SFS 70
Inflador de neumáticos, aerosol con manguera . . . . . SFS 94
Inflador de neumáticos, Slime® . . . . . SFS 98
**INFORMACIÓN ANSI . . . . . FOR 2–4**
Ingersoll, cuchillas . . . . . LG 475
**INTERRUPTORES. . . . . LG 942–950**
Interruptores de detención . . . . . LG 949
Interruptores de encendido . . . . . LG 942–945
Interruptores de encendido, Ariens . . . . . LG 942–945
Interruptores de encendido, AYP . . . . . LG 942–945
Interruptores de encendido, Cub Cadet. . . . . LG 942–945
Interruptores de encendido, Husqvarna . . . . . LG 942–945
Interruptores de encendido, John Deere . . . . . LG 942–945
Interruptores de encendido, Kohler. . . . . LG 942–945
Interruptores de encendido, MTD . . . . . LG 942–945
Interruptores de encendido, Murray . . . . . LG 942–945
Interruptores de encendido, Snapper. . . . . LG 942–945
Interruptores de interbloqueo. . . . . LG 947–948
Interruptores de la TDF (toma de fuerza). . . . . LG 946–947
Interruptores de relé . . . . . LG 729
Interruptores de seguridad . . . . . LG 947–948
Interruptores del sensor de aceite, Honda . . . . . LG 950
Interruptores, arrancador . . . . . LG 942–945
Interruptores, detención . . . . . LG 949
Interruptores, encendido. . . . . LG 942–945
Interruptores, encendido/apagado . . . . . LG 949
Interruptores, interbloqueo . . . . . LG 947–948
Interruptores, seguridad. . . . . LG 947–948
Interruptores, TDF (toma de fuerza) . . . . . LG 946–947
Inventario esencial . . . . . SFS 21

## J


J-B Weld . . . SFS 97
Jacobsen, barras raspadoras para lanzadores de nieve . . . LG 848
Jacobsen, cojinetes . . . LG 226–237
Jacobsen, cuchillas . . . LG 476–482
Jacobsen, cuchillas de cortadora de bordes . . . LG 585
Jacobsen, pernos de cortar para lanzadores de nieve . . . LG 852–853
Jaladeras . . . LG 802
Jaladeras . . . LG 802
John Deere, aplicaciones de barras y cadenas . . . FOR 47–49
John Deere, aplicaciones para ruedas dentadas . . . FOR 194
John Deere, barras raspadoras para lanzadores de nieve . . . LG 847–848
John Deere, bujes . . . LG 237–238
John Deere, bujes para lanzadores de nieve . . . LG 854
John Deere, cables de cebador . . . LG 709
John Deere, cojinetes . . . LG 237–238
John Deere, cojinetes para lanzadores de nieve . . . LG 854
John Deere, conjuntos semineumáticos de ruedas sin pinchaduras . . . LG 1044–1046
John Deere, correas . . . LG 292–297
John Deere, cuchillas . . . LG 482–493
John Deere, cuchillas de cortadoras de bordes . . . LG 585
John Deere, deslizaderas para lanzadores de nieve . . . LG 850
John Deere, embragues eléctricos TDF . . . LG 733–741
John Deere, filtros de combustible en el conducto . . . LG 774–776
John Deere, interruptores de encendido . . . LG 942–945
John Deere, interruptores de seguridad . . . LG 947–948
John Deere, interruptores TDF . . . LG 946–947
John Deere, pernos de cortar para lanzadores de nieve . . . LG 852–853
John Deere, reguladores de voltaje . . . LG 731–732
John Deere, rótulas . . . LG 938–939
John Deere, ruedas . . . LG 1029–1046
John Deere, ruedas intermedias . . . LG 829–831
John Deere, ruedas/rodillos antidesbroce . . . LG 1037–1042
John Deere, vástagos . . . LG 891–893
Jonsered, aplicaciones de barras y cadenas . . . FOR 50–55
Jonsered, aplicaciones para ruedas dentadas . . . FOR 194–195
Jonsered, resortes de arranque manual . . . LG 937
Juego adaptador de prensa remachadora con paso de 3/4" . . . SFS 47
Juego adaptador de prensa remachadora con paso de 3/4" . . . SFS 47
Juego de cortadora de arbustos con paquete de baterías . . . OPE 21
Juego de cortadora de arbustos con paquete de baterías . . . OPE 19
Juego de empaquetaduras, Briggs & Stratton . . . LG 745
Juego de empaquetaduras, Kohler . . . LG 757
Juego de empaquetaduras, Tecumseh . . . LG 757
Juego de engranajes de dirección, Murray . . . LG 941
Juego de llaves Allen con mango en t . . . SFS 66
Juego de llaves Allen, mango en t . . . SFS 66
Juego de mantenimiento profesional, cadena para motosierra . . . SFS 10
Juego de sacabocados de pivote de cilindro . . . SFS 68
Juego de sacabocados, pivote de cilindro . . . SFS 67
Juego de sierra de poste con paquete de baterías . . . OPE 20
Juegos de carburadores . . . LG 602–621
Juegos de carburadores Nikki . . . LG 606
Juegos de carburadores Oregon® . . . LG 606–608
Juegos de carburadores TK . . . LG 608
Juegos de carburadores Walbro . . . LG 608–614
Juegos de carburadores, Briggs & Stratton . . . LG 602–604
Juegos de carburadores, Cub Cadet . . . LG 604–605
Juegos de carburadores, Homelite . . . LG 605
Juegos de carburadores, Honda . . . LG 605
Juegos de carburadores, Kohler . . . LG 605
Juegos de carburadores, Lawn-Boy . . . LG 606
Juegos de carburadores, MTD . . . LG 606
Juegos de carburadores, Nikki . . . LG 606
Juegos de carburadores, Oregon® . . . LG 606–608
Juegos de carburadores, Tecumseh . . . LG 608–609
Juegos de carburadores, Tillotson . . . LG 609–610
Juegos de carburadores, TK . . . LG 608
Juegos de carburadores, Walbro . . . LG 608–614
Juegos de carburadores, Zama . . . LG 614–621
Juegos de empaquetaduras, Honda . . . LG 751
Juegos de manguera y arandela para sistema de combustible . . . LG 764–765
Juegos de reparación de neumáticos sin cámara . . . SFS 69
Juegos de reparación para rociadores de mochila . . . LG 911–912
Juegos de reparación, neumáticos sin cámara . . . SFS 69
Juegos, carburadores reconstruidos . . . LG 602–621
Juntas tóricas, surtido . . . SFS 102


## K


Kawasaki, arrancadores manuales . . . LG 924
Kawasaki, cuchillas de cortadora de bordes . . . LG 585
Kawasaki, filtros de aceite . . . LG 814–819
Kawasaki, filtros de aire, espuma . . . LG 201–203
Kawasaki, filtros de aire, papel . . . LG 198–201
Kawasaki, filtros de combustible en el conducto . . . LG 774–776
Kawasaki, motores de arranque . . . LG 917–918
Kawasaki, peras cebadoras . . . LG 630
Kawasaki, poleas de arranque manual . . . LG 935
Kawasaki, reguladores de voltaje . . . LG 732
Kawasaki, resortes de arranque manual . . . LG 937
Kawasaki, tapas de combustible . . . LG 772
Kees, correas . . . LG 297
Kees, cuchillas . . . LG 494–497
Kinetic, partidor de troncos . . . OPE 44–45
King Kutter, conjuntos semineumáticos de ruedas sin pinchaduras . . . LG 1044–1046
King Kutter, correas . . . LG 298
King Kutter, cuchillas . . . LG 497
Kobalt, aplicaciones de barras y cadenas . . . FOR 55
Kohler, arrancadores manuales . . . LG 924
Kohler, bobinas de encendido . . . LG 784–787
Kohler, empaquetadura . . . LG 757
Kohler, engranajes del arrancador eléctrico . . . LG 928
Kohler, filtros de aceite . . . LG 814–819
Kohler, filtros de aire de espuma . . . LG 206–207
Kohler, filtros de aire de papel . . . LG 203–206
Kohler, filtros de combustible en el conducto . . . LG 774–776
Kohler, interruptores de encendido . . . LG 942–945
Kohler, juego de empaquetadura . . . LG 757
Kohler, juegos de carburadores . . . LG 605
Kohler, motores de arranque . . . LG 918–919
Kohler, platinos y condensador . . . LG 789
Kohler, reguladores de voltaje . . . LG 732
Kohler, resortes de arranque manual . . . LG 937
Kohler, silenciador . . . LG 808–809
Kubota, correas . . . LG 298–299
Kubota, cuchillas . . . LG 497–501
Kubota, filtros de aire . . . LG 208
Kubota, filtros de combustible en el conducto . . . LG 774–776
Kubota, interruptores de seguridad . . . LG 947–948
Kubota, interruptores TDF . . . LG 946–947
Kubota, ruedas/rodillos antidesbroce . . . LG 1037–1042


## L


Land Pride, cuchillas . . . LG 501–503
Lanzador de nieve, arrancadores de 120V, Cub Cadet . . . LG 861
Lanzador de nieve, arrancadores de 120V, MTD . . . LG 861
Lanzador de nieve, arrancadores de 120V, Tecumseh . . . LG 861
Lanzador de nieve, arrancadores manuales, Cub Cadet . . . LG 860–861
Lanzador de nieve, arrancadores manuales, MTD . . . LG 860–861
Lanzador de nieve, bujes, Ariens . . . LG 853–854
Lanzador de nieve, bujes, Cub Cadet . . . LG 854–855
Lanzador de nieve, bujes, John Deere . . . LG 854
Lanzador de nieve, bujes, MTD . . . LG 854–855
Lanzador de nieve, cables de control de barrena . . . LG 701–720
Lanzador de nieve, cables de control de dirección . . . LG 701–720
Lanzador de nieve, cables de control de tubo de descarga . . . LG 701–720
Lanzador de nieve, cables de control, Cub Cadet . . . LG 856–859
Lanzador de nieve, cables de control, MTD . . . LG 856–859
Lanzador de nieve, cebador, Cub Cadet . . . LG 860
Lanzador de nieve, cebador, MTD . . . LG 860
Lanzador de nieve, cojinetes . . . LG 853–855
Lanzador de nieve, cojinetes, Ariens . . . LG 853–854
Lanzador de nieve, cojinetes, Cub Cadet . . . LG 854–855
Lanzador de nieve, cojinetes, John Deere . . . LG 854
Lanzador de nieve, cojinetes, MTD . . . LG 854–855
Lanzador de nieve, conjunto de barrena, MTD . . . LG 846
Lanzador de nieve, correas . . . LG 862–863
Lanzador de nieve, disco impulsor . . . LG 851
Lanzador de nieve, engranaje de bronce, Cub Cadet . . . LG 856
Lanzador de nieve, engranaje de bronce, MTD . . . LG 856
Lanzador de nieve, gatillo de control de dirección, Cub Cadet . . . LG 856
Lanzador de nieve, gatillo de control de dirección, MTD . . . LG 856
Lanzador de nieve, guarda de brida de tubo de descarga, Cub Cadet . . . LG 855
Lanzador de nieve, guarda de brida de tubo de descarga, MTD . . . LG 855
Lanzador de nieve, guía basculante de tubo de descarga, Cub Cadet . . . LG 856
Lanzador de nieve, guía basculante de tubo de descarga, MTD . . . LG 856

# 2019 Índice Alfabético – ES


Lanzador de nieve, juegos de carburadores, Cub Cadet . . . . . LG 859
Lanzador de nieve, juegos de carburadores, MTD. . . . . LG 859
Lanzador de nieve, leva de bloqueo del embrague, Cub Cadet . . . . . LG 856
Lanzador de nieve, leva de bloqueo del embrague, MTD . . . . . LG 856
Lanzador de nieve, llave de encendido, Cub Cadet . . . . . LG 861
Lanzador de nieve, llave de encendido, Tecumseh . . . . . LG 861
Lanzador de nieve, paletas . . . . . LG 846–847
Lanzador de nieve, paletas, Honda . . . . . LG 846
Lanzador de nieve, paletas, MTD . . . . . LG 846
Lanzador de nieve, paletas, Snapper . . . . . LG 847
Lanzador de nieve, paletas, Toro . . . . . LG 847
Lanzador de nieve, placa de bloqueo, Cub Cadet . . . . . LG 856
Lanzador de nieve, placa de bloqueo, MTD. . . . . LG 856
Lanzador de nieve, rueda, Cub Cadet . . . . . LG 856
Lanzador de nieve, rueda, MTD . . . . . LG 856
Lanzadores de nieve, barras raspadoras. . . . . LG 847–849
Lanzadores de nieve, barras raspadoras, Ariens . . . . . LG 847
Lanzadores de nieve, barras raspadoras, Honda . . . . . LG 847
Lanzadores de nieve, barras raspadoras, Jacobsen . . . . . LG 848
Lanzadores de nieve, barras raspadoras, John Deere . . . . . LG 847–848
Lanzadores de nieve, barras raspadoras, Simplicity . . . . . LG 849
Lanzadores de nieve, barras raspadoras, Snapper . . . . . LG 849
Lanzadores de nieve, barras raspadoras, Toro . . . . . LG 849
Lanzadores de nieve, deslizaderas . . . . . LG 849–851
Lanzadores de nieve, deslizaderas, Ariens . . . . . LG 850
Lanzadores de nieve, deslizaderas, Ariens . . . . . LG 850
Lanzadores de nieve, deslizaderas, AYP . . . . . LG 850
Lanzadores de nieve, deslizaderas, Honda. . . . . LG 850
Lanzadores de nieve, deslizaderas, John Deere. . . . . LG 850
Lanzadores de nieve, deslizaderas, MTD. . . . . LG 850
Lanzadores de nieve, deslizaderas, Murray . . . . . LG 850
Lanzadores de nieve, deslizaderas, Snapper . . . . . LG 850
Lanzadores de nieve, deslizaderas, Toro. . . . . LG 851
Lanzadores de nieve, deslizaderas, Universal. . . . . LG 849
Lanzadores de nieve, llave de encendido, MTD . . . . . LG 861
Lanzadores de nieve, palanca de arranque, agarradera de guante . . . . . LG 851
Lanzadores de nieve, paleta, Toro. . . . . LG 851
Lanzadores de nieve, pernos de cortar. . . . . LG 852–853
Lanzadores de nieve, pernos de cortar, Ariens . . . . . LG 852–853
Lanzadores de nieve, pernos de cortar, Honda . . . . . LG 852–853
Lanzadores de nieve, pernos de cortar, Husqvarna . . . . . LG 852–853
Lanzadores de nieve, pernos de cortar, Jacobsen. . . . . LG 852–853
Lanzadores de nieve, pernos de cortar, John Deere. . . . . LG 852–853
Lanzadores de nieve, pernos de cortar, MTD. . . . . LG 852–853
Lanzadores de nieve, pernos de cortar, Murray . . . . . LG 852–853
Lanzadores de nieve, pernos de cortar, Noma. . . . . LG 852–853
Lanzadores de nieve, pernos de cortar, Snapper . . . . . LG 852–853
Lanzadores de nieve, pernos de cortar, Universal. . . . . LG 852–853
Lanzadores de nieve, placas de barrido . . . . . LG 847–849
Lanzadores de nieve, placas de barrido, Cub Cadet . . . . . LG 848
Lanzadores de nieve, placas de barrido, MTD . . . . . LG 848–849
Lápices de taller . . . . . SFS 19
Lápices de taller . . . . . SFS 19
Lastec, cuchillas . . . . . LG 503–504
Lawn Chief, vástagos. . . . . LG 869
Lawn-Boy, bobinas de encendido . . . . . LG 784–787
Lawn-Boy, cojinetes . . . . . LG 238–239
Lawn-Boy, correas . . . . . LG 299
Lawn-Boy, cuchillas . . . . . LG 505
Lawn-Boy, cuchillas de cortadora de bordes . . . . . LG 585
Lawn-Boy, filtros de aire. . . . . LG 209
Lawn-Boy, juegos de carburadores. . . . . LG 606
Lawn-Boy, ruedas . . . . . LG 1029–1046
Lawn-Boy, válvulas de aguja de admisión del carburador . . . . . LG 629
Lengüetas para manguera de combustible . . . . . LG 765
Lesco, correas . . . . . LG 299
Lesco, cuchillas. . . . . LG 505–508
Lesco, cuchillas de cortadora de bordes . . . . . LG 585
Lijadoras de banda, cuchillas cortadoras de césped . . . . . SFS 58–59
Lijadoras de piedra, cuchillas cortadoras de césped . . . . . SFS 59–61
Lima de repuesto, barra de motosierra y herramienta para desbastador de rieles . . . . . SFS 13
Limas planas, cadena para motosierra Oregon® . . . . . SFS 8
Limas redondas, cadena para motosierra Oregon® . . . . . SFS 7–8
Limpiador de carburador en aerosol . . . . . SFS 93
Limpiador de carburador, aerosol. . . . . SFS 93
Limpiador de freno en aerosol. . . . . SFS 94
Limpiador de manos, Fast Orange . . . . . SFS 91
Limpiador para manos Fast Orange. . . . . SFS 91
Línea de recortadora Platinum Gatorline. . . . . OPE 27
Líneas de cortadora de bordes Gatorline para ST275 . . . . . OPE 26
Linterna de trabajo, WL275 Oregon® 40V MAX inalámbrica . . . . . OPE 22
Linterna portátil, PS250 Oregon® 40V MAX inalámbrica . . . . . OPE 22
Líquido de arranque en aerosol . . . . . SFS 93–94
Líquido de arranque en aerosol . . . . . SFS 93–94
**LISTA DE PIEZAS ILUSTRADA . . . . . LG 40–175**
Little Wonder, cojinetes . . . . . LG 239
Little Wonder, correas . . . . . LG 300
Little Wonder, cuchillas de cortadora de bordes. . . . . LG 585
Llave recta, provisión . . . . . LG 727
Llaves de encendido . . . . . LG 945–946
Llaves de maquinaria, empaques de exhibición . . . . . LG 801
Llaves de vaso con destornillador . . . . . SFS 19
Llaves del volante . . . . . LG 789
Llaves Woodruff, empaques de exhibición . . . . . LG 801
Llaves, arranque . . . . . LG 945–946
Llaves, encendido . . . . . LG 945–946
Llaves, volante . . . . . LG 790
LM300 Oregon® 40V MAX, cortadora de césped, sistema de herramienta sin cable . . . . . OPE 16
LM400 Oregon® 40V MAX, cortadora de césped, sistema de herramienta sin cable . . . . . OPE 17
Lubricante de engranajes, "0". . . . . SFS 92
Lubricante de engranajes, "00" . . . . . SFS 92
Lubricante de engranajes, 80–90 WT. . . . . SFS 92
Lubricante del talón del neumático . . . . . SFS 68
Lubricante, engranajes, "0" . . . . . SFS 92
Lubricante, engranajes, "00" . . . . . SFS 92
Lubricante, engranajes, 80–90 wt . . . . . SFS 92
Lubricante, penetrante. . . . . SFS 93
Lubricante, talón del neumático. . . . . SFS 68
Lubricantes, grasas, limpiadores, solventes y pegamentos . . . . . SFS 92–98


## M


Makita, aplicaciones de barras y cadenas . . . . . FOR 56–59
Makita, aplicaciones para ruedas dentadas . . . . . FOR 196
Manijas de arrancadores manuales. . . . . LG 929–930
Manijas de limas, cadena para motosierra. . . . . SFS 9
Manijas, arrancadores manuales . . . . . LG 929–930
Maruyama, aplicaciones de barras y cadenas . . . . . FOR 59
Maruyama, cuchillas de cortadora de bordes . . . . . LG 586
Maruyama, filtros de aire . . . . . LG 209
Maruyama, piezas de cortadora y sopladora. . . . . LG 1020–1021
Maruyama, tapas de combustible. . . . . LG 772
Máscaras desechables de respiración . . . . . SFS 120
Máscaras respiradoras, desechables . . . . . SFS 120
Máscaras, respiradoras desechables . . . . . SFS 120
Massey Fergunson, correas . . . . . LG 300
Massey Fergunson, cuchillas . . . . . LG 508–511
Mastercraft, aplicaciones para ruedas dentadas . . . . . FOR 196
McClane, cables de control . . . . . LG 709
McClane, correas. . . . . LG 300
McClane, cuchillas de cortadora de bordes . . . . . LG 586
McCulloch, aplicaciones de barras y cadenas . . . . . FOR 60–62
McCulloch, aplicaciones para ruedas dentadas . . . . . FOR 196–197
McCulloch, cuchillas de cortadora de bordes . . . . . LG 586
McCulloch, filtros de aire . . . . . LG 209
McCulloch, piezas de cortadora y sopladora. . . . . LG 1021
McLane, cojinetes . . . . . LG 239
Mitsubishi, filtros de aire . . . . . LG 210
Mochila sopladora BL120VX, 120V Professional Series™ . . . . . OPE 32
Mochilas de baterías, 120V Professional Series™. . . . . OPE 36
Módulo de encendido Universal . . . . . LG 789
Módulo de encendido, universal. . . . . LG 789
Montante de la correa . . . . . LG 331
Montgomery Ward, aplicaciones para ruedas dentadas . . . . . FOR 197
Motor 2 tiempos, Only One™. . . . . SFS 19
Motores de ruedas hidrostáticas . . . . . LG 696
Motores de ruedas, propulsor hidrostático . . . . . LG 697
Motosierra, abridor para cadenas e impulsor de remachadora en la punta de la barra de la motosierra, alto rendimiento . . . . . SFS 45
Motosierra, abridor para cadenas, modelo para banco . . . . . SFS 43
Motosierra, aceite de motosierra, cuñas, llave de vaso con destornillador, varios. . . . . SFS 14, 19–20
Motosierra, afiladoras de cadenas . . . . . SFS 32–40
Motosierra, afiladoras de cadenas, abridoras, remachadoras. . . . . SFS 26–57
Motosierra, ajustadores de cadena . . . . . LG 686–687
Motosierra, ajustadores de cadena . . . . . SFS 47
Motosierra, aplicaciones de la rueda dentada por número de pieza de Oregon® . . . . . FOR 204–208
Motosierra, aplicaciones de las ruedas dentadas por modelo de sierra. . FOR 187–203
Motosierra, barras guía, barras, cuchillas de las motosierras. . . . . FOR 148–179

Motosierra, barras, barras guía, cuchillas de las motosierras . . . . . FOR 148–179
Motosierra, base de afiladora de cadenas . . . . . SFS 41
Motosierra, bolsa de herramientas . . . . . OPE 23
Motosierra, cómo establecer una orden de compra de cadena. . . . . FOR 98
Motosierra, conductos de combustible . . . . . LG 688–690
Motosierra, CS300 Oregon® 40V MAX inalámbrica . . . . . OPE 15
Motosierra, cubiertas de la barra . . . . . SFS 13
Motosierra, filtros de aire . . . . . LG 678–684
Motosierra, filtros de combustible . . . . . LG 691–692
Motosierra, fotografías de cadenas, descripciones, características . . . . FOR 111–137
Motosierra, fotografías de las barras, descripciones, características . . FOR 154-166
Motosierra, fotografías de las ruedas dentadas, descripciones, características . . . . . FOR 182–186
Motosierra, juegos de afilado de cadenas . . . . . SFS 10
Motosierra, llave . . . . . LG 677
Motosierra, montajes de la barra . . . . . FOR 171–177
Motosierra, peras cebadoras . . . . . LG 690
Motosierra, piezas de repuesto para cadenas . . . . . FOR 143
Motosierra, poleas de arranque. . . . . LG 692
Motosierra, prensas remachadoras de cadenas, alto rendimiento . . . . . SFS 46
Motosierra, prensas remachadoras de cadenas, modelo para banco . . . . . SFS 44
Motosierra, puntas reemplazables de la barra . . . . . FOR 167
Motosierra, resortes del arranque . . . . . LG 693
Motosierra, ruedas de afilar de 4-1/8" para afiladoras de cadenas . . . . . SFS 41
Motosierra, ruedas de afilar de 5-3/4" para afiladoras de cadenas . . . . . SFS 40
Motosierra, ruedas dentadas . . . . . FOR 180–210
Motosierra, tabla de afilado de cadenas . . . . . FOR 141
Motosierra, tabla de clasificación de cadenas. . . . . FOR 141
Motosierra, tabla de comparación de cadenas, Oregon® y otras marcas . FOR 138–139
Motosierra, tabla de conversión de cadenas, cadena P/N de consumidor a cadena P/N Pro de Oregon® . . . . . FOR 98
Motosierra, tablas de conversión de cadenas, recuento de eslabones de transmisión y longitudes de cadena . . . . . FOR 147
Motosierra, tensores de cadena. . . . . LG 686–687
Motosierra, terminología, piezas de una cadena, secuencia de cadena . . . . . FOR 110
Motosierra, tuercas de la barra . . . . . LG 686
Motosierras, barras y aceite para cadenas. . . . . SFS 19, 84
Motosierras, barras y herramienta para desbastador de rieles . . . . . SFS 13
Motosierras, barras y herramienta para limpieza de surcos . . . . . SFS 14
Motosierras, barras y herramientas de medición de cadenas para motosierras SFS 14
Motosierras, piezas eléctricas . . . . . LG 684–686
Motosierras, tapas de aceite . . . . . LG 690
Motosierras, tapas de combustible . . . . . LG 690
MTD, adaptadores de cuchillas . . . . . LG 340–341
MTD, arrancadores de 120V para lanzadores de nieve . . . . . LG 861
MTD, arrancadores manuales . . . . . LG 925
MTD, arrancadores manuales para lanzadores de nieve . . . . . LG 860–861
MTD, brazo de dirección . . . . . LG 939
MTD, bujes . . . . . LG 239–242
MTD, bujes para lanzador de nieve . . . . . LG 854–855
MTD, cables de control. . . . . LG 710–715
MTD, cables de control para lanzadores de nieve . . . . . LG 856–859
MTD, cebador para lanzadores de nieve . . . . . LG 860
MTD, cojinetes . . . . . LG 239–242
MTD, cojinetes para lanzador de nieve . . . . . LG 854–855
MTD, conjunto de barrena de lanzador de nieve . . . . . LG 846
MTD, correas . . . . . LG 300–306
MTD, correas de bloqueo de la campana de la cortadora. . . . . LG 803
MTD, cuchillas . . . . . LG 512–521
MTD, cuchillas de cortadora de bordes. . . . . LG 586
MTD, deslizaderas para lanzador de nieve . . . . . LG 850
MTD, discos de propulsión. . . . . LG 726
MTD, dispositivo de seguridad de la banda. . . . . LG 802
MTD, eje de dirección. . . . . LG 940
MTD, ejes . . . . . LG 938
MTD, embragues eléctricos TDF . . . . . LG 733–741
MTD, engranaje de bronce de lanzadores de nieve . . . . . LG 856
MTD, engranaje del piñón de dirección . . . . . LG 941
MTD, filtros de aire . . . . . LG 210
MTD, freno de cuchillas . . . . . LG 802
MTD, gatillo de control de dirección para lanzadores de nieve . . . . . LG 856
MTD, guarda de brida de drenaje para lanzadores de nieve . . . . . LG 855
MTD, guía basculante de drenaje para lanzadores de nieve . . . . . LG 856
MTD, interruptores de encendido . . . . . LG 942–945
MTD, interruptores de seguridad . . . . . LG 947–948
MTD, interruptores TDF . . . . . LG 946–947
MTD, juegos de carburador para lanzadores de nieve . . . . . LG 859
MTD, juegos de carburadores . . . . . LG 606
MTD, leva de bloqueo del embrague para lanzadores de nieve . . . . . LG 856
MTD, llaves de encendido para lanzadores de nieve . . . . . LG 861
MTD, motores de arranque . . . . . LG 921
MTD, paletas para lanzador de nieve . . . . . LG 846
MTD, peras cebadoras . . . . . LG 630
MTD, pernos de cortar para lanzadores de nieve . . . . . LG 852–853
MTD, piezas de cortadora y sopladora . . . . . LG 1021–1022
MTD, placa de bloqueo para lanzadores de nieve . . . . . LG 856
MTD, placas de barrido para lanzadores de nieve . . . . . LG 848–849
MTD, poleas de arranque manual . . . . . LG 935
MTD, poleas de propulsión. . . . . LG 837–838
MTD, rótulas . . . . . LG 938–939
MTD, rueda para lanzador de nieve . . . . . LG 856
MTD, ruedas. . . . . LG 1029–1046
MTD, ruedas intermedias . . . . . LG 831–832
MTD, ruedas/rodillos antidesbroce . . . . . LG 1037–1042
MTD, solenoides de encendido . . . . . LG 730
MTD, tapas de combustible . . . . . LG 772
MTD, vástagos . . . . . LG 893–901
Multiaccesorios sin cable, bordeadora EG600 . . . . . OPE 13
Multiaccesorios sin cable, cabezal eléctrico PH600. . . . . OPE 12
Multiaccesorios sin cable, cortasetos eléctrico HT600 . . . . . OPE 13
Multiaccesorios sin cable, desmalezadora ST600. . . . . OPE 13
Multiaccesorios sin cable, extensión EX600 . . . . . OPE 12
Multiaccesorios sin cable, sierra montada sobre poste PS600. . . . . OPE 12
Murray, adaptadores de cuchillas. . . . . LG 342
Murray, bujes . . . . . LG 242–243
Murray, cables de control . . . . . LG 715–717
Murray, cojinetes . . . . . LG 242–243
Murray, correas. . . . . LG 306–309
Murray, cuchillas . . . . . LG 522–528
Murray, deslizaderas para lanzador de nieve . . . . . LG 850
Murray, enlaces de arrastre . . . . . LG 939
Murray, eslabones de dirección . . . . . LG 939
Murray, interruptores de encendido . . . . . LG 942–945
Murray, juego de engranajes de dirección . . . . . LG 941
Murray, pernos de cortar para lanzadores de nieve. . . . . LG 852–853
Murray, poleas de propulsión . . . . . LG 838–839
Murray, rótulas . . . . . LG 938–939
Murray, ruedas . . . . . LG 1029–1046
Murray, ruedas intermedias . . . . . LG 832–833
Murray, ruedas/rodillos antidesbroce . . . . . LG 1037–1042
Murray, silenciadores . . . . . LG 809
Murray, vástagos . . . . . LG 902

## N

NEUMÁTICOS, CÁMARAS Y CADENAS PARA NEUMÁTICOS . . . . . LG 955–965
Neumáticos, de espuma sólida sin pinchaduras. . . . . LG 964
Neumáticos, dibujo agrícola. . . . . LG 958
Neumáticos, dibujo All Trail II . . . . . LG 964
Neumáticos, dibujo AT100 . . . . . LG 958
Neumáticos, dibujo AT489 . . . . . LG 964
Neumáticos, dibujo chevron. . . . . LG 959
Neumáticos, dibujo con refuerzo . . . . . LG 957
Neumáticos, dibujo de barra. . . . . LG 958
Neumáticos, dibujo de barra chevron. . . . . LG 958
Neumáticos, dibujo de carro de campo de golf . . . . . LG 963
Neumáticos, dibujo de golf . . . . . LG 963
Neumáticos, dibujo de nervadura recta . . . . . LG 960
Neumáticos, dibujo de varilla de golf . . . . . LG 959
Neumáticos, dibujo diente de sierra . . . . . LG 961
Neumáticos, dibujo liso . . . . . LG 960
Neumáticos, dibujo magnum . . . . . LG 962
Neumáticos, dibujo nudoso ATV. . . . . LG 963
Neumáticos, dibujo para césped . . . . . LG 959
Neumáticos, dibujo para lanzador de nieve . . . . . LG 958
Neumáticos, dibujo Polar Trac. . . . . LG 958
Neumáticos, dibujo Power Trac . . . . . LG 958
Neumáticos, dibujo Scorpion . . . . . LG 963
Neumáticos, dibujo Snow Hog. . . . . LG 958
Neumáticos, dibujo Super Lug. . . . . LG 958
Neumáticos, dibujo Super Turf . . . . . LG 962
Neumáticos, dibujo Tital . . . . . LG 958
Neumáticos, dibujo Tru Power. . . . . LG 958
Neumáticos, dibujo Turf CTR. . . . . LG 963
Neumáticos, dibujo Turf Master. . . . . LG 961
Neumáticos, dibujo Turf Mate . . . . . LG 963
Neumáticos, dibujo Turf Saver . . . . . LG 959
Neumáticos, dibujo Turf Saver II . . . . . LG 960
Neumáticos, dibujo Turf Smart . . . . . LG 962
Neumáticos, dibujo X-trac . . . . . LG 958
Neumáticos, funda . . . . . LG 964
Neumáticos, para carretilla . . . . . LG 957
Neumáticos, remolques de alta velocidad . . . . . LG 960

# 2019 Índice Alfabético – ES


Noma, bujes . . . . . LG 243
Noma, cojinetes . . . . . LG 243
Noma, correas . . . . . LG 309–310
Noma, pernos de cortar para lanzadores de nieve . . . . . LG 852–853
Noma, ruedas . . . . . LG 1029–1046
Noma, vástagos . . . . . LG 869


## O


Oleo-Mac, filtros de aire . . . . . LG 210
Olympyk (Oleo-Mac), aplicaciones de barras y cadenas . . . . . FOR 62–64
Olympyk (Oleo-Mac), aplicaciones para ruedas dentadas . . . . . FOR 197
Onan, filtros de aire . . . . . LG 211
Onan, motores de arranque . . . . . LG 921
Onan, reguladores de voltaje . . . . . LG 732
OPE, accesorios . . . . . OPE 23
OPE, cadena PowerSharp® . . . . . OPE 25
OPE, piezas de repuesto . . . . . OPE 25
Oregon, aplicaciones para ruedas dentadas . . . . . FOR 197
Oregon®, productos seleccionados . . . . . FOR 4
Orejeras, seguridad auditiva . . . . . SFS 121


## P


Palanca de tala . . . . . SFS 18
Palanca, tala . . . . . SFS 18
Paletas, derrames . . . . . SFS 89
Paletas, lanzadores de nieve . . . . . LG 846–847
Pallets para derrames . . . . . SFS 89
Pantalla de punto de venta, 120V Professional Series™ . . . . . OPE 37
Pantallas de punto de venta, sistema de herramienta sin cable . . . . . OPE 27–29
Pantalones de trabajo . . . . . SFS 114
Pantalones de trabajo de envoltura completa . . . . . SFS 114
Paquete de batería B425E . . . . . OPE 10
Paquete de batería B600E . . . . . OPE 10
Paquete de batería B650E . . . . . OPE 10
Paquetes de baterías de li-ion . . . . . OPE 10
Paquetes para tiendas, filtros de aire . . . . . LG 178
**PARTES DEL LANZADOR DE NIEVE . . . . . LG 846–863**
Partidor de troncos, 22 ton . . . . . OPE 39
Partidor de troncos, 28 ton . . . . . OPE 40
Partidor de troncos, 28 ton Extend Split™ . . . . . OPE 41
Partidor de troncos, 35 ton . . . . . OPE 42
Partidor de troncos, Kinetic . . . . . OPE 44–45
Partidores . . . . . OPE 38–47
**PARTIDORES DE TRONCOS . . . . . OPE 38–47**
Partidores de troncos Oregon . . . . . OPE 38–47
Partner, aplicaciones de barras y cadenas . . . . . FOR 65–66
Partner, aplicaciones para ruedas dentadas . . . . . FOR 197–198
Partner, correas . . . . . LG 310
Partner, filtros de aire . . . . . LG 211
Pasadores de bloqueo . . . . . LG 795
Pasadores de bloqueo, empaques de exhibición . . . . . LG 800
Pasadores de chaveta, empaques de exhibición . . . . . LG 799
Pasadores de dientes de arado, surtido . . . . . SFS 102
Pasadores de enganche . . . . . LG 795
Pasadores de enganche, cabeza roja . . . . . LG 796
Pasadores de enganche, doblados . . . . . LG 796
Pasadores de eslabón superior . . . . . LG 794
Pasadores de resorte, empaques de exhibición . . . . . LG 801
Pasadores de resorte, surtido . . . . . SFS 102
Pasadores de seguridad del volante . . . . . LG 789
Pasadores de seguridad, volante . . . . . LG 790
Pegamento Gorilla . . . . . SFS 97
Pegamento, Gorilla . . . . . SFS 97
Penetrante, lubricante . . . . . SFS 93
Peras cebadoras . . . . . LG 629–632
Peras cebadoras Walbro . . . . . LG 631–632
Peras cebadoras, motosierras . . . . . LG 690
Perilla . . . . . LG 805
Pernos autorroscantes . . . . . SFS 105
Pernos de cortar universales para lanzadores de nieve . . . . . LG 852–853
Pernos de cortar, lanzadores de nieve . . . . . LG 852–853
Pernos de cuchilla . . . . . SFS 105
Pernos de empuñadura . . . . . SFS 105
Pernos de tope . . . . . SFS 104–105
Pernos de tope, surtido . . . . . SFS 104–105
Pernos de vástagos . . . . . LG 910
Pernos, autorroscantes . . . . . SFS 105
Pernos, cuchilla . . . . . SFS 105
Pernos, empuñadura . . . . . SFS 105
Pernos, tope . . . . . SFS 105
Pernos, vástagos . . . . . LG 910
Pico de combustible, combustibles VP . . . . . SFS 81
Piedras de afilar, afiladoras portátiles de cadenas de motosierras . . . . . SFS 12
**PIEZAS COMERCIALES . . . . . LG 694–698**
**PIEZAS DE ARRANCADORES . . . . . LG 926–936**
Piezas de arrancadores manuales . . . . . LG 929–930
**PIEZAS DE CORTADORA Y SOPLADORA . . . . . LG 1016–1027**
Piezas de cortadora y sopladora, Echo . . . . . LG 1016–1018
Piezas de cortadora y sopladora, Homelite . . . . . LG 1019
Piezas de cortadora y sopladora, Husqvarna . . . . . LG 1020
Piezas de cortadora y sopladora, Maruyama . . . . . LG 1020–1021
Piezas de cortadora y sopladora, McCulloch . . . . . LG 1021
Piezas de cortadora y sopladora, MTD . . . . . LG 1021–1022
Piezas de cortadora y sopladora, RedMax . . . . . LG 1022
Piezas de cortadora y sopladora, Ryan . . . . . LG 1022–1023
Piezas de cortadora y sopladora, Ryobi . . . . . LG 1022–1023
Piezas de cortadora y sopladora, Shindaiwa . . . . . LG 1023–1024
Piezas de cortadora y sopladora, Snapper . . . . . LG 1024
Piezas de cortadora y sopladora, Stihl . . . . . LG 1024–1026
Piezas de cortadora y sopladora, Tanaka . . . . . LG 1026
Piezas de cortadora y sopladora, Weed Eater . . . . . LG 1027
Piezas de cortadoras y sopladoras Weed Eater . . . . . LG 1027
**PIEZAS DE DIRECCIÓN . . . . . LG 938–941**
**PIEZAS DE ENCENDIDO . . . . . LG 784–790**
Piezas de la suspensión de la plataforma de la cortadora . . . . . LG 804
**PIEZAS DE PROPULSIÓN . . . . . LG 724–728**
Piezas de repuesto Gator® SpeedLoad™ . . . . . LG 973
Piezas de repuesto para afiladoras y abridoras descontinuadas . . . . . SFS 48–57
Piezas de repuesto para afiladores de cuchillas cortadoras de césped . . . . . SFS 62
**PIEZAS DEL ARADO . . . . . LG 954**
Piezas del conjunto rodante . . . . . LG 694–695
**PIEZAS DEL MOTOR . . . . . LG 745–760**
**PIEZAS ELÉCTRICAS . . . . . LG 729–744**
Piezas eléctricas, motosierras . . . . . LG 684–686
Piezas eléctricas, sierras abrasivas . . . . . LG 684–686
Piezas para afiladoras, abridoras, remachadoras descontinuadas . . . . . SFS 48–57
**PIEZAS PARA CADENA DE RODILLOS . . . . . LG 676**
Piezas para convertidores de par . . . . . LG 675
**PIEZAS PARA SIERRA DE CADENA Y SIERRA ABRASIVA . . LG 677–693**
**PIEZAS VARIAS . . . . . LG 802–805**
Piñón de dirección, MTD . . . . . LG 941
Pinza hemostática . . . . . SFS 65
Pioneer, aplicaciones de barras y cadenas . . . . . FOR 67–68
Pioneer, aplicaciones para ruedas dentadas . . . . . FOR 198
Pistola desechable para grasa . . . . . SFS 12–13
Pistola para grasa de uso único . . . . . SFS 12–13
Pistola para grasa, desechable . . . . . SFS 12–13
Pistolas para grasa, barras de sierra de cadena . . . . . SFS 12–13
Pistones, Honda . . . . . LG 754
Pivote de detención del alambre del acelerador . . . . . LG 722
Placas de barrido, lanzadores de nieve . . . . . LG 847–849
Plataforma para derrames . . . . . SFS 89
Plataformas, derrame . . . . . SFS 89
Platinos y condensador, Briggs & Stratton . . . . . LG 789
Platinos y condensador, Kohler . . . . . LG 789
Platinos y condensador, Tecumseh . . . . . LG 789
Podadora motorizada / Podadora motorizada Echo, aplicaciones de barras y cadenas . . . . . FOR 73–74
**POLEAS . . . . . LG 821–841**
Poleas de arrancadores manuales . . . . . LG 932–935
Poleas de arrancadores manuales Mitsubishi . . . . . LG 935
Poleas de arrancadores manuales, Briggs & Stratton . . . . . LG 933
Poleas de arrancadores manuales, Echo . . . . . LG 933
Poleas de arrancadores manuales, Green Machine . . . . . LG 936
Poleas de arrancadores manuales, Homelite . . . . . LG 934
Poleas de arrancadores manuales, Honda . . . . . LG 934
Poleas de arrancadores manuales, Husqvarna . . . . . LG 934
Poleas de arrancadores manuales, Kawasaki . . . . . LG 935
Poleas de arrancadores manuales, Mitsubishi . . . . . LG 935
Poleas de arrancadores manuales, MTD . . . . . LG 935
Poleas de arrancadores manuales, Ryan . . . . . LG 934–935
Poleas de arrancadores manuales, Snapper . . . . . LG 936
Poleas de arrancadores manuales, Stihl . . . . . LG 936
Poleas de arrancadores manuales, Tecumseh . . . . . LG 936
Poleas de propulsión . . . . . LG 834–840
Poleas de propulsión por tamaño, tabla . . . . . LG 841
Poleas de propulsión, AYP . . . . . LG 834
Poleas de propulsión, Bobcat . . . . . LG 835
Poleas de propulsión, Cub Cadet . . . . . LG 837
Poleas de propulsión, Exmark . . . . . LG 836

Poleas de propulsión, MTD . . . LG 837–838
Poleas de propulsión, Murray . . . LG 838–839
Poleas de propulsión, Power Trim . . . LG 839
Poleas de propulsión, repuesto del fabricante original del equipo. . . . LG 834–840
Poleas de propulsión, Scag . . . LG 839–840
Poleas de propulsión, Snapper . . . LG 840
Poleas, arrancadores manuales . . . LG 932–935
Poleas, intermedia . . . LG 824–834
Poleas, propulsión . . . LG 834–840
Pomo palanca de cambios . . . LG 805
Portacuchillas . . . LG 340–342
Portafusibles . . . LG 742
Portalápices de taller . . . SFS 19
Portalápices de taller . . . SFS 19
Poulan / Poulan Pro, aplicaciones de barras y cadenas. . . . FOR 68–73
Poulan / Poulan Pro, aplicaciones para ruedas dentadas. . . . FOR 198–200
Poulan, correas profesionales . . . LG 311
Poulan, cuchillas . . . LG 529–533
Poulan, filtros de aire . . . LG 211–212
Poulan, peras cebadoras. . . . LG 630
Power Trim, correas . . . LG 311
Power Trim, cuchillas de cortadora de bordes. . . . LG 586
Power Trim, poleas de propulsión. . . . LG 839
Powerhorse, aplicaciones de barras y cadenas . . . FOR 74
PowerSharp® – Cadena de motosierra para OPE . . . OPE 25
PowerSharp® – Sistema para el afilado de cadenas de motosierras . . . FOR 136–137
Prensa remachadora de cadenas de motosierra de alto rendimiento . . . SFS 46
Prensa remachadora de cadenas de motosierra modelo para banco . . . SFS 44
Prensa remachadora eléctrica compacta . . . SFS 42
Prensa remachadora, cadenas para motosierra, alto rendimiento . . . SFS 46
Prensa remachadora, eléctrica compacta . . . SFS 42
Probador de chispas . . . SFS 65
Probador de compresión. . . . SFS 65
Probador, bujías . . . SFS 65
Probador, compresión . . . SFS 65
Púas de elevación para troncos . . . SFS 18
Púas de elevación, troncos . . . SFS 18
Punto de compra de material de soporte. . . . SFS 4–6, 21–23

## R

Ramp, múltiple . . . SFS 89
Rampa múltiple . . . SFS 89
Rampas, cortadoras de césped . . . SFS 64
Ransomes, conjuntos semineumáticos de ruedas sin pinchaduras . . . LG 1044–1046
Raspador de empaquetadura . . . LG 760
Raspadora, empaquetadura . . . LG 760
Receptor para cortadora de troncos . . . OPE 46
Receptor, cortadoras de troncos . . . OPE 46
Receptores de hierba. . . . LG 781–782
Recortadora de hilo. . . . OPE 19
Recubrimiento de botas, neopreno . . . SFS 113
Recubrimiento para botas de neopreno . . . SFS 113
Red Hawk, cuchillas . . . LG 534–535
RedMax, aplicaciones de barras y cadenas . . . FOR 74–76
Redmax, aplicaciones para ruedas dentadas . . . FOR 200
RedMax, cuchillas de cortadora de bordes. . . . LG 587
RedMax, filtros de aire . . . LG 212
RedMax, piezas de cortadora y sopladora . . . LG 1022
RedMax, resortes de arranque manual. . . . LG 937
Refacer, válvulas . . . SFS 67
Reguladores de voltaje. . . . LG 731–732
Reguladores, voltaje . . . LG 731–732
Remington, aplicaciones de barras y cadenas. . . . FOR 77–78
Remington, aplicaciones para ruedas dentadas. . . . FOR 200
Repuesto cabezal de cortadora ST275 . . . OPE 26
Repuesto de cadena PowerSharp® para OPE . . . OPE 25
Repuesto de paquetes de baterías . . . OPE 10
Repuestos para línea de cortadora de bordes Gator® SpeedLoad™. . . . LG 973
Repuestos para poleas de propulsión del fabricante original del equipo . LG 834–840
Repuestos para ruedas intermedias del fabricante original del equipo . . LG 824–834
**RESORTES . . . LG 913–914**
Resortes de arrancador manual. . . . LG 937
Resortes de arrancadores manuales, Briggs & Stratton . . . LG 937
Resortes de arrancadores manuales, Dolmar . . . LG 937
Resortes de arrancadores manuales, Echo . . . LG 937
Resortes de arrancadores manuales, Green Machine. . . . LG 937
Resortes de arrancadores manuales, Hoffco . . . LG 937
Resortes de arrancadores manuales, Homelite . . . LG 937
Resortes de arrancadores manuales, Honda . . . LG 937
Resortes de arrancadores manuales, Husqvarna . . . LG 937
Resortes de arrancadores manuales, Jonsered. . . . LG 937
Resortes de arrancadores manuales, Kawasaki . . . LG 937
Resortes de arrancadores manuales, Kohler . . . LG 937
Resortes de arrancadores manuales, RedMax . . . LG 937
Resortes de arrancadores manuales, Robin . . . LG 937
Resortes de arrancadores manuales, Shindaiwa . . . LG 937
Resortes de arrancadores manuales, Stihl . . . LG 937
Resortes de extensión, surtido . . . SFS 104
Resortes de torsión, surtido. . . . SFS 104
Resortes, arrancadores manuales . . . LG 937
Respiraderos del sistema de combustible . . . LG 763–764
Respiraderos del sistema de combustible . . . LG 763–764
Robin, arrancadores manuales . . . LG 925
Robin, bobinas de encendido . . . LG 784–787
Robin, carburadores . . . LG 596
Robin, resortes de arranque manual . . . LG 937
**ROCIADORES. . . . LG 911–912**
Rociadores de mochila. . . . LG 911
Ropa de trabajo para lluvia . . . SFS 115
Ropa de trabajo, lluvia . . . SFS 115
Roper, bujes. . . . LG 227–228
Roper, cojinetes. . . . LG 227–228
Roper, correas . . . LG 311–312
Roper, vástagos. . . . LG 903–904
Rótulas . . . LG 938–939
Rueda de afilar, afiladora de cadena . . . LG 687
Rueda dentada, intermedia . . . LG 725
Rueda dentada, placa de acero . . . LG 725
**RUEDAS . . . LG 1029–1047**
Ruedas afiladoras de la cadena . . . LG 687
Ruedas de afilar, afiladores de cadenas de motosierras de 4-1/8". . . . SFS 41
Ruedas de afilar, afiladores de cadenas de motosierras de 5-3/4" . . . SFS 40
**RUEDAS DENTADAS - MOTOSIERRA. . . . FOR 180–210**
Ruedas dentadas de la placa de acero . . . LG 725
Ruedas dentadas de propulsión, motosierras . . . FOR 180–210
Ruedas dentadas intermedias. . . . LG 725
Ruedas intermedias . . . LG 821–823
Ruedas intermedias por tamaño, tabla . . . LG 821–823
Ruedas intermedias, AMF . . . LG 824
Ruedas intermedias, AYP . . . LG 824–825
Ruedas intermedias, Bobcat. . . . LG 825–826
Ruedas intermedias, Bunton. . . . LG 826–827
Ruedas intermedias, Cub Cadet . . . LG 826–827
Ruedas intermedias, Dixie Chopper. . . . LG 827
Ruedas intermedias, Excel. . . . LG 827
Ruedas intermedias, Exmark . . . LG 827–828
Ruedas intermedias, Grasshopper . . . LG 828
Ruedas intermedias, Hustler . . . LG 827
Ruedas intermedias, John Deere . . . LG 829–831
Ruedas intermedias, MTD . . . LG 831–832
Ruedas intermedias, Murray . . . LG 832–833
Ruedas intermedias, repuestos del fabricante original del equipo . . . LG 824–834
Ruedas intermedias, Scag . . . LG 833
Ruedas intermedias, Toro . . . LG 834
Ruedas para carretilla . . . LG 1047
Ruedas semineumáticas universales. . . . LG 1029–1037
Ruedas semineumáticas, AMF . . . LG 1029–1037
Ruedas semineumáticas, AYP. . . . LG 1029–1037
Ruedas semineumáticas, Bobcat . . . LG 1029–1037
Ruedas semineumáticas, Bunton . . . LG 1029–1037
Ruedas semineumáticas, Honda . . . LG 1029–1037
Ruedas semineumáticas, Husqvarna. . . . LG 1029–1037
Ruedas semineumáticas, John Deere . . . LG 1029–1037
Ruedas semineumáticas, Lawn-Boy . . . LG 1029–1037
Ruedas semineumáticas, MTD . . . LG 1029–1037
Ruedas semineumáticas, Murray . . . LG 1029–1037
Ruedas semineumáticas, Noma. . . . LG 1029–1037
Ruedas semineumáticas, Sears. . . . LG 1029–1037
Ruedas semineumáticas, Sensation . . . LG 1029–1037
Ruedas semineumáticas, Snapper . . . LG 1029–1037
Ruedas semineumáticas, Toro . . . LG 1029–1037
Ruedas Sensation . . . LG 1029–1046
Ruedas, afiladores de cadenas de motosierras . . . SFS 40–41
Ruedas, AMF . . . LG 1029–1046
Ruedas, AYP. . . . LG 1029–1046
Ruedas, Bobcat . . . LG 1029–1046
Ruedas, Bunton . . . LG 1029–1046
Ruedas, carretillas . . . LG 1047
Ruedas, Honda . . . LG 1029–1046
Ruedas, Husqvarna. . . . LG 1029–1046
Ruedas, John Deere . . . LG 1029–1046
Ruedas, Lawn-Boy . . . LG 1029–1046

# 2019 Índice Alfabético – ES


Ruedas, MTD . . . LG 1029–1046
Ruedas, Murray . . . LG 1029–1046
Ruedas, Noma . . . LG 1029–1046
Ruedas, Sears . . . LG 1029–1046
Ruedas, Sensation . . . LG 1029–1046
Ruedas, Snapper . . . LG 1029–1046
Ruedas, Toro . . . LG 1029–1046
Ruedas, universales semineumáticas . . . LG 1029–1037
Ruedas/rodillos antidesbroce, AMF . . . LG 1037–1042
Ruedas/rodillos antidesbroce, AYP . . . LG 1037–1042
Ruedas/rodillos antidesbroce, Bobcat . . . LG 1037–1042
Ruedas/rodillos antidesbroce, Bolens . . . LG 1037–1042
Ruedas/rodillos antidesbroce, Cub Cadet . . . LG 1037–1042
Ruedas/rodillos antidesbroce, Exmark . . . LG 1037–1042
Ruedas/rodillos antidesbroce, Ferris . . . LG 1037–1042
Ruedas/rodillos antidesbroce, Grasshopper . . . LG 1037–1042
Ruedas/rodillos antidesbroce, Gravely . . . LG 1037–1042
Ruedas/rodillos antidesbroce, John Deere . . . LG 1037–1042
Ruedas/rodillos antidesbroce, Kubota . . . LG 1037–1042
Ruedas/rodillos antidesbroce, MTD . . . LG 1037–1042
Ruedas/rodillos antidesbroce, Murray . . . LG 1037–1042
Ruedas/rodillos antidesbroce, Scag . . . LG 1037–1042
Ruedas/rodillos antidesbroce, Toro . . . LG 1037–1042
Ruedas/rodillos antidesbroce, Wheel Horse . . . LG 1037–1042
Ryan, piezas de cortadora y sopladora . . . LG 1022–1023
Ryan, poleas de arranque manual . . . LG 934–935
Ryobi, aplicaciones de barras y cadenas . . . FOR 78–79
Ryobi, cuchillas de cortadora de bordes . . . LG 587
Ryobi, piezas de cortadora y sopladora . . . LG 1022–1023


## S


Scag, bujes . . . LG 244
Scag, cables de control . . . LG 717–718
Scag, cinta de freno . . . LG 698
Scag, cojinetes . . . LG 244
Scag, conjuntos de ruedas neumáticas . . . LG 1044–1046
Scag, conjuntos semineumáticos de ruedas sin pinchaduras . . . LG 1044–1046
Scag, correa de tanque de combustible . . . LG 698
Scag, correas . . . LG 312–314
Scag, cuchillas . . . LG 535–537
Scag, filtros de combustible en el conducto . . . LG 774–776
Scag, interruptores de seguridad . . . LG 947–948
Scag, interruptores TDF . . . LG 946–947
Scag, poleas de propulsión . . . LG 839–840
Scag, rótulas . . . LG 938–939
Scag, ruedas intermedias . . . LG 833
Scag, ruedas/rodillos antidesbroce . . . LG 1037–1042
Scag, tapas de combustible . . . LG 772
Scag, vástagos . . . LG 903
Scotts, correas . . . LG 315
Scotts, cuchillas . . . LG 537–539
Sears / Craftsman, adaptadores de cuchilla . . . LG 342
Sears / Craftsman, aplicaciones de barras y cadenas . . . FOR 23–25
Sears / Craftsman, aplicaciones para ruedas dentadas . . . FOR 200
Sears / Craftsman, bujes . . . LG 227–228
Sears / Craftsman, cojinetes . . . LG 227–228
Sears / Craftsman, correas . . . LG 315
Sears / Craftsman, cuchillas de cortadoras de bordes . . . LG 587
Sears / Craftsman, ruedas . . . LG 1029–1046
Sears / Craftsman, vástagos . . . LG 903–904
Seguridad auditiva, orejeras . . . SFS 121
Seguridad, información ANSI de la motosierra . . . FOR 2–3
Sellador de neumáticos Slime® . . . SFS 98
Sellador de rosca Permatex . . . SFS 96
Sellador de rosca, Permatex . . . SFS 96
Sellador Permatex . . . SFS 96
Sellador, Permatex . . . SFS 95
Sello de aceite, Tecumseh . . . LG 759
Sello de aceite, Troy-Bilt . . . LG 954
Sello, Troy-Bilt . . . LG 954
Sellos de aceite, Briggs & Stratton . . . LG 749
Sellos de aceite, Honda . . . LG 756
Sellos de vástagos . . . LG 910
Sellos, Briggs & Stratton . . . LG 749
Sellos, Honda . . . LG 756
Sellos, vástagos . . . LG 910
Shindaiwa, aplicaciones de barras y cadenas . . . FOR 79–83
Shindaiwa, cuchillas de cortadora de bordes . . . LG 587
Shindaiwa, filtros de aire . . . LG 212–213
Shindaiwa, piezas de cortadora y sopladora . . . LG 1023–1024
Shindaiwa, resortes de arranque manual . . . LG 937
Shindaiwa, tapas de combustible . . . LG 772
Sierra de poste PS250 . . . OPE 20
Sierra de poste, PS250 Oregon® 40V MAX inalámbrica . . . OPE 20
Sierra montada sobre poste PS600, multiaccesorios sin cable . . . OPE 12
Sierra para arboricultores, sierra manual curva . . . SFS 17
Sierra para arboricultores, sierra manual recta . . . SFS 17
Sierras abrasivas, correas . . . LG 684
Sierras abrasivas, filtros de aire . . . LG 678–684
Sierras abrasivas, piezas eléctricas . . . LG 684–686
Sierras de poste de montaje central . . . OPE 20
Sierras para arboricultores . . . SFS 16–17
Silenciador, Briggs & Stratton . . . LG 806–807
Silenciador, Cub Cadet . . . LG 807
Silenciador, Gravely . . . LG 807
Silenciador, Honda . . . LG 807–808
Silenciador, Kohler . . . LG 808–809
Silenciador, Murray . . . LG 809
Silenciador, Snapper . . . LG 809
Silenciador, Tecumseh . . . LG 809–810
Silenciador, Toro . . . LG 810
Silenciador, Wheel Horse . . . LG 810
Silenciador, Wisconsin . . . LG 810
**SILENCIADORES . . . LG 806–810**
Simplicity, barras raspadoras para lanzadores de nieve . . . LG 849
Simplicity, bujes . . . LG 244–245
Simplicity, cojinetes . . . LG 244–245
Simplicity, correas . . . LG 316
Simplicity, cuchillas . . . LG 539–545
Simplicity, embragues eléctricos TDF . . . LG 733–741
Sistema de herramienta sin cable, LM300 Oregon® 40V MAX, cortadora de césped . . . OPE 16
Sistema de herramienta sin cable, LM400 Oregon® 40V MAX, cortadora de césped . . . OPE 17
Sistema de herramienta sin cable, pantallas de punto de venta . . . OPE 27–29
Sistema de herramientas inalámbricas, aplicaciones de barras y cadenas Oregon® . . . FOR 64
Sistema de herramientas inalámbricas, BL300 Oregon® 40V MAX, sopladora . . . OPE 18
Sistema de herramientas inalámbricas, cargadores de baterías . . . OPE 10
Sistema de herramientas inalámbricas, CS300 Oregon® 40V MAX, motosierra . . . OPE 15
Sistema de herramientas inalámbricas, HT250 Oregon® 40V MAX, cortadora de arbustos . . . OPE 21
Sistema de herramientas inalámbricas, PowerNow™ Paquetes de baterías de li-ion . . . OPE 10
Sistema de herramientas inalámbricas, PS250 Oregon® 40V MAX, sierra de poste . . . OPE 20
Sistema de herramientas inalámbricas, ST275 Oregon® 40V MAX, cortador/bordeador . . . OPE 19
Sistema de herramientas inalámbricas, WL275 Oregon® 40V MAX, linterna portátil . . . OPE 22
Sistema multiaccesorios sin cable . . . OPE 11–14
Skil, aplicaciones de barras y cadenas . . . FOR 83
Skil, aplicaciones para ruedas dentadas . . . FOR 201
Snapper, adaptadores de cuchilla . . . LG 342
Snapper, aplicaciones de barras y cadenas . . . FOR 84
Snapper, aplicaciones para ruedas dentadas . . . FOR 201
Snapper, barras raspadoras para lanzadores de nieve . . . LG 849
Snapper, botas SEAL (todo terreno) . . . LG 805
Snapper, bujes . . . LG 245–246
Snapper, cables de control . . . LG 718–719
Snapper, cinta de freno . . . LG 698
Snapper, cojinetes . . . LG 245–246
Snapper, conjuntos de ruedas neumáticas . . . LG 1044–1046
Snapper, correas . . . LG 316–319
Snapper, cuchillas . . . LG 545–556
Snapper, deslizaderas para lanzador de nieve . . . LG 850
Snapper, discos de propulsión . . . LG 727
Snapper, embragues eléctricos TDF . . . LG 733–741
Snapper, filtros de combustible en el conducto . . . LG 774–776
Snapper, interruptores de detención . . . LG 949
Snapper, interruptores de encendido . . . LG 942–945
Snapper, interruptores de encendido/apagado . . . LG 950
Snapper, interruptores de seguridad . . . LG 947–948
Snapper, interruptores TDF . . . LG 946–947
Snapper, paletas para lanzador de nieve . . . LG 849
Snapper, pernos de cortar para lanzadores de nieve . . . LG 852–853
Snapper, piezas de cortadora y sopladora . . . LG 1024
Snapper, poleas de arranque manual . . . LG 936
Snapper, poleas de propulsión . . . LG 840
Snapper, rótulas . . . LG 938–939
Snapper, ruedas . . . LG 1029–1046
Snapper, silenciadores . . . LG 809

Solenoides . . . . . LG 729–730
Solo, aplicaciones de barras y cadenas . . . . . FOR 84–87
Solo, aplicaciones para ruedas dentadas . . . . . FOR 201
Solvente para limpieza . . . . . SFS 94
Solvente, limpieza . . . . . SFS 94
Sopladora manual, Oregon® 40V MAX inalámbrica . . . . . OPE 18
Sopladora, BL300 Oregon® 40V MAX inalámbrica, manual . . . . . OPE 18
Soporte del eje de dirección, AYP . . . . . LG 939
Soporte del eje de dirección, Husqvarna . . . . . LG 939
Soporte para equipo comercial . . . . . SFS 74–76
Soportes, equipo comercial . . . . . SFS 74–76
Spartan, cuchillas . . . . . LG 557
Stanley Hydraulic, aplicaciones de barras y cadenas . . . . . FOR 87
Steiner, cuchillas . . . . . LG 557–558
Stihl, aplicaciones de barras y cadenas . . . . . FOR 88–92
Stihl, aplicaciones para ruedas dentadas . . . . . FOR 201–203
Stihl, bobinas de encendido . . . . . LG 784–787
Stihl, correas . . . . . LG 320
Stihl, cuchillas de cortadora de bordes . . . . . LG 587
Stihl, filtros de aire . . . . . LG 213–216
Stihl, manija de arranque . . . . . LG 931
Stihl, piezas de cortadora y sopladora . . . . . LG 1024–1026
Stihl, poleas de arranque manual . . . . . LG 936
Stihl, resortes de arranque manual . . . . . LG 937
Stihl, tapas de combustible . . . . . LG 773
Stihl, trinquetes y resortes de arranque . . . . . LG 930–931
Sujetadores con forma de E, surtido . . . . . SFS 100
Sujetadores de cable del acelerador . . . . . LG 722
Sujetadores en R . . . . . LG 795
Sulkies, cortadoras de césped . . . . . SFS 77–78
**SUMINISTROS DE CAMPO . . . . . SFS 72–107**
Sun Joe, aplicaciones de barras y cadenas . . . . . FOR 92–93
SuperTwist Magnum Gatorline™ para ST275 . . . . . OPE 27
Surtido . . . . . SFS 100–104
Surtido de abrazaderas para mangueras . . . . . SFS 104
Surtido de clavijas . . . . . SFS 104
Surtido de pasadores de chaveta . . . . . SFS 100
Surtido de pivotes de cilindro . . . . . SFS 102
Surtido, abrazaderas de manguera . . . . . SFS 104
Surtido, accesorios de acelerador . . . . . SFS 101
Surtido, anillos de retención . . . . . SFS 103
Surtido, boquillas de engrase . . . . . SFS 101
Surtido, clavijas . . . . . SFS 104
Surtido, conectores y bornes eléctricos . . . . . SFS 100
Surtido, empaquetaduras, motores de admisión de 2 tiempos . . . . . SFS 103
Surtido, filtros de combustible dentro del depósito . . . . . SFS 103
Surtido, horquillas . . . . . SFS 100
Surtido, juntas tóricas . . . . . SFS 102
Surtido, pasadores de chaveta . . . . . SFS 100
Surtido, pasadores de dientes del arado . . . . . SFS 102
Surtido, pasadores de resorte . . . . . SFS 102
Surtido, perno y tuercas de cabeza hexagonal métricas . . . . . SFS 101
Surtido, perno y tuercas de cabeza hexagonal métricos . . . . . SFS 101
Surtido, pernos de tope . . . . . SFS 104–105
Surtido, pivotes de cilindro . . . . . SFS 102
Surtido, resortes de extensión . . . . . SFS 104
Surtido, resortes de torsión . . . . . SFS 104
Surtido, sujetadores con forma de E . . . . . SFS 100
Surtido, tornillos de cabeza con hueco hexagonal . . . . . SFS 101
Sutech, cuchillas . . . . . LG 559
Swisher, conjuntos semineumáticos de ruedas sin pinchaduras . . . . . LG 1044–1046
Swisher, cuchillas . . . . . LG 559


## T


Tabla de aplicación Gator® SpeedLoad™ . . . . . LG 974–978
Tabla de bujes por tipo . . . . . LG 249
Tabla de clasificación de las cadenas de motosierras Oregon® . . . . . FOR 3
Tabla de correas por tamaño . . . . . LG 250–258
Tabla de cuchillas de cortadoras de bordes por tamaño . . . . . LG 589
Tabla de cuchillas por tamaño . . . . . LG 350–366
Tabla de resolución de problemas de correa . . . . . LG 338–339
Tabla, aplicaciones de barras y cadenas . . . . . FOR 21–97
Tabla, cadena de motosierra especificación por clasificación . . . . . FOR 140–141
Tabla, cadena de motosierra, conversiones de longitud y recuento de eslabones de transmisión . . . . . FOR 147
Tabla, clasificación ANSI de cadenas de motosierras . . . . . FOR 2
Tabla, combinaciones de barras y cadenas . . . . . FOR 100–101
Tabla, piezas de repuesto de cadenas de motosierra . . . . . FOR 143
Tabla, ruedas dentadas de motosierras, aplicación por modelos de sierra . . . . . FOR 187–203
Tabla, ruedas dentadas de motosierras, aplicación, por número de pieza de Oregon® . . . . . FOR 204–208
Tablas de referencia de los juegos de carburadores . . . . . LG 634–674
Tacómetro inalámbrico . . . . . SFS 67
Tacómetro, inalámbrico . . . . . SFS 67
Tanaka, aplicaciones de barras y cadenas . . . . . FOR 93–95
Tanaka, aplicaciones para ruedas dentadas . . . . . FOR 203
Tanaka, cuchillas de cortadora de bordes . . . . . LG 588
Tanaka, piezas de cortadora y sopladora . . . . . LG 1026
Tanaka, tapas de combustible . . . . . LG 773
Tanques de combustible . . . . . LG 770
Tanza de cortadora de bordes para la recortadora de hilo inalámbrica ST275 . . . . . OPE 26
Tanza de cortadora de bordes, Biotrim™ . . . . . LG 978
Tanza de cortadora de bordes, FlexiBlade™ . . . . . LG 984
Tanza de cortadora de bordes, Platinum Gatorline™ . . . . . LG 979
Tanza de cortadora de bordes, SuperTwist Magnum Gatorline™ . . . . . LG 979
Tanza de cortadora, cortadora . . . . . LG 985
Tanza de cortadora, Gator® SpeedLoad™ . . . . . LG 973
Tanza de cortadora, longitudes pre cortadas Gatorline™ . . . . . LG 983
Tanza de cortadora, Red Round Gatorline™ . . . . . LG 983
Tanza de cortadora, Round Gatorline™ . . . . . LG 981
Tanza de cortadora, Round Magnum Gatorline™ . . . . . LG 980
Tanza de cortadora, Square Gatorline™ . . . . . LG 981
Tanza de cortadora, Square Magnum Gatorline™ . . . . . LG 980
**TANZA Y CABEZAL DE CORTADORA DE BORDES . . . . . LG 966–1015**
Tapas de combustible . . . . . LG 770–773
Tapas de combustible, Briggs & Stratton . . . . . LG 770
Tapas de combustible, Echo . . . . . LG 770–771
Tapas de combustible, Exmark . . . . . LG 771
Tapas de combustible, Homelite . . . . . LG 771
Tapas de combustible, Honda . . . . . LG 771
Tapas de combustible, Kawasaki . . . . . LG 772
Tapas de combustible, Maruyama . . . . . LG 772
Tapas de combustible, motosierras . . . . . LG 690
Tapas de combustible, motosierras . . . . . LG 690
Tapas de combustible, MTD . . . . . LG 772
Tapas de combustible, Scag . . . . . LG 772
Tapas de combustible, Shindaiwa . . . . . LG 772
Tapas de combustible, Stihl . . . . . LG 773
Tapas de combustible, Tanaka . . . . . LG 773
Tapas de combustible, Toro . . . . . LG 773
Tapón de llenado de aceite, Briggs & Stratton . . . . . LG 750
Tapón de llenado de aceite, Honda . . . . . LG 756
Tapones de expansión . . . . . LG 632–633
Tapones de expansión del carburador . . . . . LG 632–633
Tecumseh, arrancadores de 120V para lanzadores de nieve . . . . . LG 861
Tecumseh, arrancadores manuales . . . . . LG 922–925
Tecumseh, bobinas de encendido . . . . . LG 784–787
Tecumseh, carburadores . . . . . LG 598–601
Tecumseh, cubas del flotador del carburador . . . . . LG 625
Tecumseh, diafragmas del carburador . . . . . LG 623
Tecumseh, empaquetadura . . . . . LG 758–759
Tecumseh, engranajes del arrancador eléctrico . . . . . LG 929
Tecumseh, filtros de aceite . . . . . LG 814–819
Tecumseh, filtros de aire, espuma . . . . . LG 219
Tecumseh, filtros de aire, papel . . . . . LG 216–218
Tecumseh, filtros de combustible en el conducto . . . . . LG 774–776
Tecumseh, flotadores del carburador . . . . . LG 625
Tecumseh, juego de empaquetaduras . . . . . LG 758
Tecumseh, juegos de carburadores . . . . . LG 608–609
Tecumseh, llaves de encendido para lanzadores de nieve . . . . . LG 861
Tecumseh, manija de arranque . . . . . LG 931
Tecumseh, motores de arranque . . . . . LG 922
Tecumseh, peras cebadoras . . . . . LG 630
Tecumseh, platinos y condensador . . . . . LG 789
Tecumseh, poleas de arranque manual . . . . . LG 936
Tecumseh, sello de aceite . . . . . LG 759
Tecumseh, silenciador . . . . . LG 809–810
Tecumseh, tabla de referencia de carburadores . . . . . LG 594–595
Tecumseh, válvulas de aguja de admisión del carburador . . . . . LG 629
Tenazas de elevación para troncos . . . . . SFS 18
Tenazas de elevación, troncos . . . . . SFS 18
Tender, Battery . . . . . LG 743
Tensores de cadena, motosierras . . . . . LG 686–687
Terminales para bujías . . . . . LG 787–788
**TIENDAS MINORISTAS . . . . . SFS 4–23**
Tillotson, carburador . . . . . LG 595
Tillotson, juegos de carburadores . . . . . LG 609–610
Tillotson, válvulas de aguja de admisión del carburador . . . . . LG 629
Toallitas húmedas Wypall pre humedecidas . . . . . SFS 68
Toallitas húmedas, Wypall pre humedecidas . . . . . SFS 68
Tornillo de banco para limar troncos . . . . . SFS 14

# 2019 Índice Alfabético – ES


Tornillo de banco, limado de troncos . . . SFS 14
Tornillos de cabeza con hueco hexagonal, surtido . . . SFS 101
Toro, aplicaciones de barras y cadenas. . . . FOR 95
Toro, barras raspadoras para lanzadores de nieve . . . LG 849
Toro, cables de control . . . LG 719–720
Toro, cojinetes . . . LG 247
Toro, conjuntos de ruedas neumáticas . . . LG 1044–1046
Toro, conjuntos semineumáticos de ruedas sin pinchaduras. . . . LG 1044–1046
Toro, correas . . . LG 320–323
Toro, cuchillas . . . LG 560–573
Toro, deslizaderas para lanzador de nieve . . . LG 851
Toro, embragues eléctricos TDF. . . . LG 733–741
Toro, filtros de aire . . . LG 219–220
Toro, filtros de combustible en el conducto . . . LG 774–776
Toro, interruptores de detención . . . LG 949
Toro, interruptores de encendido/apagado. . . . LG 949
Toro, interruptores de seguridad . . . LG 947–948
Toro, interruptores TDF . . . LG 946–947
Toro, manija de cerrojo. . . . LG 802
Toro, paletas para lanzador de nieve . . . LG 847
Toro, paletas para lanzador de nieve . . . LG 851
Toro, ruedas. . . . LG 1029–1046
Toro, ruedas intermedias . . . LG 834
Toro, ruedas/rodillos antidesbroce . . . LG 1037–1042
Toro, silenciador . . . LG 810
Toro, tapas de combustible . . . LG 773
Toro, vástagos . . . LG 905
Tratamiento del motor Sea Foam . . . SFS 81
Tratamiento del motor, Sea Foam. . . . SFS 81
Tratamientos del motor . . . SFS 81
Tratamientos, motores. . . . SFS 81
Troy-Bilt, aplicaciones de barras y cadenas . . . FOR 95–96
Troy-Bilt, correas. . . . LG 324
Troy-Bilt, cuchillas . . . LG 573–576
Troy-Bilt, cuchillas de cortadora de bordes . . . LG 588
Tubo, silenciador Honda . . . LG 807–808
Tubos internos . . . LG 956–957
Tuercas de barra, motosierras . . . LG 686
Tuercas de seguridad. . . . SFS 105
Tuercas de vástagos . . . SFS 105
Tuercas KEPS . . . SFS 105
Tuercas, barras de motosierras. . . . LG 686
Tuercas, de seguridad . . . SFS 105
Tuercas, KEPS . . . SFS 105
Tuercas, vástago . . . SFS 105
Tuercas, vástagos . . . LG 910


## U


Unión de extremo de la biela . . . LG 938–939
Uniones de cables . . . LG 742
Uniones de cables . . . LG 722


## V


Válvula de cierre del conducto del combustible . . . LG 766–767
Válvula de drenaje de aceite. . . . LG 760
Válvula para herramientas de afilar . . . SFS 66
Válvula Refacer . . . SFS 67
Válvula, drenaje de aceite . . . LG 760
Válvulas de admisión, Honda . . . LG 755
Válvulas de aguja. . . . LG 628–629
Válvulas de aguja de admisión . . . LG 628–629
Válvulas de aguja de admisión del carburador. . . . LG 628–629
Válvulas de aguja de admisión del carburador Oregon® . . . LG 629
Válvulas de cierre, conducto de combustible . . . LG 766–767
Válvulas de escape, Honda . . . LG 755
Válvulas del flotador . . . LG 628–629
Varilla del aceite, Honda . . . LG 756
Vástago de válvula para herramienta para pescar . . . SFS 68
**VÁSTAGOS . . . LG 869–910**
Vástagos de la válvula para neumáticos sin cámara . . . LG 957
Vástagos de válvulas, neumáticos sin cámara. . . . LG 957
Vástagos, AMF . . . LG 869
Vástagos, Ariens . . . LG 869
Vástagos, AYP. . . . LG 870–876
Vástagos, Blade. . . . LG 869–910
Vástagos, Bobcat . . . LG 874–875
Vástagos, Bunton . . . LG 874–875
Vástagos, Bush Hog . . . LG 876–877
Vástagos, Caroni . . . LG 877
Vástagos, Cub Cadet . . . LG 878–883
Vástagos, Dixie Chopper . . . LG 883
Vástagos, Dixon. . . . LG 883–884
Vástagos, Excel . . . LG 884
Vástagos, Exmark . . . LG 884–889
Vástagos, Ferris . . . LG 889
Vástagos, Gilson . . . LG 891
Vástagos, Grasshopper . . . LG 890
Vástagos, Gravely . . . LG 890–891
Vástagos, Great Dane . . . LG 891
Vástagos, Husqvarna. . . . LG 870–876
Vástagos, Hustler. . . . LG 884
Vástagos, John Deere . . . LG 891–893
Vástagos, Lawn Chief . . . LG 869
Vástagos, MTD . . . LG 893–901
Vástagos, Murray. . . . LG 902
Vástagos, Noma . . . LG 869
Vástagos, Roper . . . LG 903–904
Vástagos, Scag . . . LG 903
Vástagos, Sears . . . LG 903–904
Vástagos, Toro . . . LG 905
Vástagos, Wright Stander . . . LG 905
Visor de seguridad . . . SFS 120
Visor, de seguridad . . . SFS 120


## W


Walker, adaptadores de cuchillas. . . . LG 342
Walker, conjuntos semineumáticos de ruedas sin pinchaduras . . . LG 1044–1046
Walker, correas. . . . LG 325
Walker, cuchillas . . . LG 576
Waner, embragues eléctricos TDF . . . LG 733–741
Wen / Wagner, aplicaciones de barras y cadenas . . . FOR 96
Western Auto, aplicaciones para ruedas dentadas . . . FOR 203
Wheel Horse, filtros de aire . . . LG 220
Wheel Horse, ruedas/rodillos antidesbroce . . . LG 1037–1042
Wheel Horse, silenciadores . . . LG 810
Wisconsin Robin, filtros de aire . . . LG 220–222
Wisconsin, cables de control . . . LG 720
Wisconsin, filtros de aire. . . . LG 220
Wisconsin, silenciadores. . . . LG 810
Woods, correas . . . LG 325–330
Woods, cuchillas . . . LG 577–579
Woods, embragues eléctricos TDF . . . LG 733–741
Worx, aplicaciones de barras y cadenas . . . FOR 97
Wright Stander, conjuntos semineumáticos de ruedas sin pinchaduras. LG 1044–1046
Wright Stander, correas . . . LG 330–331
Wright Stander, cuchillas . . . LG 579–582
Wright Stander, embragues eléctricos TDF . . . LG 733–741
Wright Stander, vástagos . . . LG 905


## Y


Yazoo, cojinetes. . . . LG 248
Yazoo, correas . . . LG 297
Yunque ajustable . . . SFS 47
Yunque, ajustable. . . . SFS 47


## Z


Zama, carburadores . . . LG 595
Zama, juegos de carburadores . . . LG 614–621
Zama, peras cebadoras . . . LG 632
Zipper, cuchillas . . . LG 583

12-Volt Electric Sure Sharp®, chain saw chain sharpener. . . . . SFS 11
120v Professional Series™ Tools and Accessories . . . . . OPE 30–37
120v Professional Series™, Batteries. . . . . OPE 36
120v Professional Series™, Battery Backpacks . . . . . OPE 36
120v Professional Series™, BHT120VX Hedge Trimmer . . . . . OPE 34
120v Professional Series™, BL120VX Backpack Blower. . . . . OPE 32
120v Professional Series™, C1600 Charger. . . . . OPE 36
120v Professional Series™, EG120VX Edger . . . . . OPE 35
120v Professional Series™, Point of Purchase Display . . . . . OPE 37
120v Professional Series™, ST120VX String Trimmer . . . . . OPE 33
120v Professional Series™, Stick Tool Cable . . . . . OPE 36
2-Cycle, engine oil . . . . . SFS 82
3/4" Pitch, Rivet Spinner Adaptor Kit . . . . . SFS 47
4-1/8" Grinding Wheels, chain saw chain grinders. . . . . SFS 41
4-Way wedge, log splitters . . . . . OPE 47
5-3/4" Grinding Wheels, chain saw chain grinders . . . . . SFS 40

## A

Absorbant Oil, Dri. . . . . SFS 68
Accessories, chain saw chain grinders. . . . . SFS 40–41
Accessories, lawn mower blade grinders . . . . . SFS 62
Adaptor Kit, 3/4" pitch rivet spinner. . . . . SFS 47
Adjustable Anvil . . . . . SFS 47
Adjustable Yoke. . . . . LG 805
Aerator Tine . . . . . LG 590
Aerosal Tire Inflator with Hose . . . . . SFS 94
**AIR FILTERS . . . . . LG 178–222**
Air Filters, Ariens. . . . . LG 179
Air Filters, Briggs & Stratton, foam . . . . . LG 185–189
Air Filters, Briggs & Stratton, paper . . . . . LG 179–185
Air Filters, chain saws . . . . . LG 678–684
Air Filters, cut-off saws . . . . . LG 678–684
Air Filters, Echo. . . . . LG 189–191
Air Filters, Efco . . . . . LG 210
Air Filters, Enginaire . . . . . LG 203
Air Filters, Exmark . . . . . LG 191
Air Filters, Homelite . . . . . LG 191–192
Air Filters, Honda, cover assembly . . . . . LG 196
Air Filters, Honda, foam . . . . . LG 195–196
Air Filters, Honda, paper. . . . . LG 192–194
Air Filters, Husqvarna . . . . . LG 197–198
Air Filters, Kawasaki, foam . . . . . LG 201–203
Air Filters, Kawasaki, paper. . . . . LG 198–201
Air Filters, Kohler, foam . . . . . LG 206–207
Air Filters, Kohler, paper. . . . . LG 203–206
Air Filters, Kubota . . . . . LG 208
Air Filters, Lawn-Boy. . . . . LG 209
Air Filters, Maruyama . . . . . LG 209
Air Filters, McCulloch . . . . . LG 209
Air Filters, Mitsubishi . . . . . LG 210
Air Filters, MTD . . . . . LG 210
Air Filters, Oleo-Mac . . . . . LG 210
Air Filters, Onan. . . . . LG 211
Air Filters, Partner . . . . . LG 211
Air Filters, Poulan . . . . . LG 211–212
Air Filters, RedMax . . . . . LG 212
Air Filters, Shindaiwa . . . . . LG 212–213
Air Filters, shop packs . . . . . LG 178
Air Filters, Stihl . . . . . LG 213–216
Air Filters, Tecumseh, foam . . . . . LG 219
Air Filters, Tecumseh, paper. . . . . LG 216–218
Air Filters, Toro . . . . . LG 219–220
Air Filters, Wheel Horse . . . . . LG 220
Air Filters, Wisconsin. . . . . LG 220
Air Filters, Wisconsin Robin . . . . . LG 220–222
Air Tool, oil . . . . . SFS 83
Allen Wrench Set, t-handle . . . . . SFS 66
Allis-Chalmers, blades. . . . . LG 369
Allis-Chalmers, sprocket applications . . . . . FOR 187
Alpina, sprocket applications . . . . . FOR 187
AMF, anti-scalp wheels/rollers . . . . . LG 1037–1042
AMF, bearings. . . . . LG 243
AMF, belts. . . . . LG 259
AMF, bushings . . . . . LG 243
AMF, idler pulleys. . . . . LG 824
AMF, spindles . . . . . LG 869
AMF, wheels. . . . . LG 1029–1046
**ANSI INFORMATION . . . . . FOR 2–4**
Anti-Scalp Wheels/Rollers, AMF . . . . . LG 1037–1042
Anti-Scalp Wheels/Rollers, AYP. . . . . LG 1037–1042
Anti-Scalp Wheels/Rollers, Bobcat . . . . . LG 1037–1042
Anti-Scalp Wheels/Rollers, Bolens . . . . . LG 1037–1042
Anti-Scalp Wheels/Rollers, Cub Cadet . . . . . LG 1037–1042
Anti-Scalp Wheels/Rollers, Exmark . . . . . LG 1037–1042
Anti-Scalp Wheels/Rollers, Ferris . . . . . LG 1037–1042
Anti-Scalp Wheels/Rollers, Grasshopper . . . . . LG 1037–1042
Anti-Scalp Wheels/Rollers, Gravely . . . . . LG 1037–1042
Anti-Scalp Wheels/Rollers, John Deere . . . . . LG 1037–1042
Anti-Scalp Wheels/Rollers, Kubota. . . . . LG 1037–1042
Anti-Scalp Wheels/Rollers, MTD . . . . . LG 1037–1042
Anti-Scalp Wheels/Rollers, Murray. . . . . LG 1037–1042
Anti-Scalp Wheels/Rollers, Scag . . . . . LG 1037–1042
Anti-Scalp Wheels/Rollers, Toro . . . . . LG 1037–1042
Anti-Scalp Wheels/Rollers, Wheel Horse . . . . . LG 1037–1042
Anvil, adjustable . . . . . SFS 47
Apparel, rain . . . . . SFS 115
Apron Chaps. . . . . SFS 114
Arborist Saw, curved hand saw . . . . . SFS 17
Arborist Saw, straight hand saw . . . . . SFS 17
Arborist Saws. . . . . SFS 16–17
Ariens, air filters . . . . . LG 179
Ariens, bearings . . . . . LG 225–227
Ariens, belts. . . . . LG 264–266
Ariens, blades. . . . . LG 369–374
Ariens, bushings . . . . . LG 225–227
Ariens, edger blades . . . . . LG 584
Ariens, electric PTO clutches . . . . . LG 733–741
Ariens, ignition switches. . . . . LG 942–945
Ariens, PTO switches. . . . . LG 946–947
Ariens, safety switches . . . . . LG 947–948
Ariens, semi-pneumatic flat-free wheel assemblies . . . . . LG 1044–1046
Ariens, snow thrower bearings . . . . . LG 853–854
Ariens, snow thrower bushings . . . . . LG 853–854
Ariens, snow thrower scraper bars. . . . . LG 847
Ariens, snow thrower shear bolts. . . . . LG 852–853
Ariens, snow thrower skids . . . . . LG 850
Ariens, snow thrower skids . . . . . LG 850
Ariens, spindles. . . . . LG 869
Assortment, cotter pins . . . . . SFS 100
Assortment, e-clips . . . . . SFS 100
Assortment, electrical terminals & connectors . . . . . SFS 100
Assortment, extension springs . . . . . SFS 104
Assortment, gaskets, intake 2-cycle engines . . . . . SFS 103
Assortment, grease fittings . . . . . SFS 101
Assortment, hair pins . . . . . SFS 100
Assortment, hose clamps . . . . . SFS 104
Assortment, in-tank fuel filters . . . . . SFS 103
Assortment, linch pins . . . . . SFS 104
Assortment, metric hex cap screws & nuts . . . . . SFS 101
Assortment, o-rings . . . . . SFS 102
Assortment, roll pins. . . . . SFS 102
Assortment, shoulder bolts . . . . . SFS 104–105
Assortment, snap rings . . . . . SFS 103
Assortment, socket set screws . . . . . SFS 101
Assortment, spring pins . . . . . SFS 102
Assortment, throttle accessories. . . . . SFS 101
Assortment, tiller tine pins . . . . . SFS 102
Assortment, torsion springs. . . . . SFS 104
Assortments . . . . . SFS 100–104
Auto Saw Chain Grinders. . . . . SFS 26–31
Axles, MTD . . . . . LG 938
AYP, anti-scalp wheels/rollers . . . . . LG 1037–1042
AYP, bearings . . . . . LG 227–228
AYP, belts . . . . . LG 259–264
AYP, blade adaptors . . . . . LG 340
AYP, blades . . . . . LG 374–382
AYP, bushings . . . . . LG 227–228
AYP, control cables . . . . . LG 701–703
AYP, drag links . . . . . LG 939
AYP, drive pulleys. . . . . LG 834
AYP, electric PTO clutches . . . . . LG 733–741
AYP, idler pulleys . . . . . LG 824–825
AYP, ignition switches . . . . . LG 942–945
AYP, mower deck suspension parts. . . . . LG 804
AYP, mower hood lock straps . . . . . LG 803
AYP, PTO switches . . . . . LG 946–947
AYP, safety switches . . . . . LG 947–948
AYP, snow thrower skids. . . . . LG 850
AYP, spindles . . . . . LG 870–876
AYP, steering bushing . . . . . LG 939–940
AYP, steering links . . . . . LG 939

# 2019 Alphabetical Index – EN


AYP, steering sector gear . . . . . LG 939–940
AYP, steering shaft . . . . . LG 940
AYP, steering shaft support . . . . . LG 939
AYP, steering wheel adapter . . . . . LG 939
AYP, wheels . . . . . LG 1029–1046


## B


B425E Battery Pack . . . . . OPE 10
B600E Battery Pack . . . . . OPE 10
B650E Battery Pack . . . . . OPE 10
Back Pack Sprayers . . . . . LG 911
Back Pack Sprayers Repair Kits . . . . . LG 911–912
Bad Boy, belts . . . . . LG 266–267
Balancer, lawn mower blades . . . . . SFS 63
Ball Bearings . . . . . LG 223–224
Ball Joints . . . . . LG 938–939
**BAR & CHAIN APPLICATIONS . . . . . FOR 21–97**
Bar Nuts, chain saws . . . . . LG 686
Batteries . . . . . LG 744
Batteries, 120v Professional Series™ . . . . . OPE 36
Battery Backpacks, 120v Professional Series™ . . . . . OPE 36
Battery, cable end . . . . . LG 744
Battery, cable lug . . . . . LG 743
Battery, cables . . . . . LG 744
Battery, charger . . . . . LG 743
Battery, chargers . . . . . OPE 10
Battery, hydrometer . . . . . LG 744
Battery, packs . . . . . OPE 10
Battery, tender . . . . . LG 743
Battery, terminal cleaner spray . . . . . SFS 95
Battery, terminal cover . . . . . LG 743
Battery, terminal insulator . . . . . LG 743
Battery, terminal lead . . . . . LG 743
Battery, terminal protector spray . . . . . SFS 95
Bead Lube . . . . . SFS 68
Bead Lube Swab . . . . . SFS 68
Bead Seater Tire Inflator, Oregon® . . . . . SFS 70
**BEARINGS & BUSHINGS . . . . . LG 223–249**
Bearings, AMF . . . . . LG 243
Bearings, Ariens . . . . . LG 225–227
Bearings, AYP . . . . . LG 227–228
Bearings, ball . . . . . LG 223–224
Bearings, Bobcat . . . . . LG 228–230
Bearings, Bunton . . . . . LG 230
Bearings, caged roller . . . . . LG 223
Bearings, Cub Cadet . . . . . LG 231-232
Bearings, Dixon . . . . . LG 232
Bearings, EHP . . . . . LG 227–228
Bearings, Encore . . . . . LG 232
Bearings, Exmark . . . . . LG 233-234
Bearings, Ferris . . . . . LG 234
Bearings, flanged wheel . . . . . LG 224
Bearings, Grasshopper . . . . . LG 234–235
Bearings, Gravely . . . . . LG 235
Bearings, Honda . . . . . LG 235
Bearings, Hustler . . . . . LG 236
Bearings, Jacobsen . . . . . LG 236–237
Bearings, John Deere . . . . . LG 237–238
Bearings, K&S . . . . . LG 238
Bearings, Lawn-Boy . . . . . LG 238–239
Bearings, Little Wonder . . . . . LG 239
Bearings, McLane . . . . . LG 239
Bearings, MTD . . . . . LG 239–242
Bearings, Murray . . . . . LG 242–243
Bearings, Noma . . . . . LG 243
Bearings, Oregon® Magnum, ball . . . . . LG 224
Bearings, rod end . . . . . LG 804
Bearings, Roper . . . . . LG 227–228
Bearings, Scag . . . . . LG 244
Bearings, Sears . . . . . LG 227–228
Bearings, Simplicity . . . . . LG 244–245
Bearings, Snapper . . . . . LG 245–246
Bearings, snow throwers . . . . . LG 853–855
Bearings, tapered roller . . . . . LG 223
Bearings, Toro . . . . . LG 247
Bearings, wheel . . . . . LG 223–224
Bearings, Yazoo . . . . . LG 248
Befco, blades . . . . . LG 382
Belt Grinders, lawn mower blades . . . . . SFS 58–59
Belt Measuring Tool . . . . . LG 331
Belt Rack . . . . . LG 331
Belt Trouble Shooting Chart . . . . . LG 338–339
**BELTS . . . . . LG 250–339**
Belts by Size, table . . . . . LG 250–258
Belts, AMF . . . . . LG 259
Belts, Ariens . . . . . LG 264–266
Belts, AYP . . . . . LG 259–264
Belts, Bad Boy . . . . . LG 266–267
Belts, Bobcat . . . . . LG 267–269
Belts, Bunton . . . . . LG 269–270
Belts, Bush Hog . . . . . LG 270–271
Belts, Club Car . . . . . LG 272
Belts, Comet . . . . . LG 272
Belts, Country Clipper . . . . . LG 272
Belts, Craftsman . . . . . LG 315
Belts, Cub Cadet . . . . . LG 273–277
Belts, cut-off saws . . . . . LG 684
Belts, Dixie Chopper . . . . . LG 277
Belts, Dixon . . . . . LG 278
Belts, Dynamark . . . . . LG 278
Belts, E-Z Roll . . . . . LG 278
Belts, Encore . . . . . LG 278
Belts, Excel . . . . . LG 279
Belts, Exmark . . . . . LG 279–283
Belts, EZ-Go . . . . . LG 283
Belts, Ferris . . . . . LG 283–284
Belts, Grasshopper . . . . . LG 284–285
Belts, Gravely . . . . . LG 285–287
Belts, Great Dane . . . . . LG 287–288
Belts, Honda . . . . . LG 288
Belts, Husqvarna . . . . . LG 288–292
Belts, Hustler . . . . . LG 279
Belts, industrial polyester cord . . . . . LG 336–337
Belts, John Deere . . . . . LG 292–297
Belts, Kees . . . . . LG 297
Belts, King Kutter . . . . . LG 298
Belts, Kubota . . . . . LG 298–299
Belts, Lawn-Boy . . . . . LG 299
Belts, Lesco . . . . . LG 299
Belts, Little Wonder . . . . . LG 300
Belts, Manco . . . . . LG 300
Belts, Massey Fergunson . . . . . LG 300
Belts, McClane . . . . . LG 300
Belts, MTD . . . . . LG 300–306
Belts, Murray . . . . . LG 306–309
Belts, Noma . . . . . LG 309–310
Belts, Partner . . . . . LG 310
Belts, Polaris ATV . . . . . LG 310
Belts, Poulan Pro . . . . . LG 311
Belts, Power Trim . . . . . LG 311
Belts, premium Aramid cord . . . . . LG 334–335
Belts, Roper . . . . . LG 311–312
Belts, Scag . . . . . LG 312–314
Belts, Scotts . . . . . LG 315
Belts, Sears . . . . . LG 315
Belts, Simplicity . . . . . LG 316
Belts, Snapper . . . . . LG 316–319
Belts, snow thrower . . . . . LG 862–863
Belts, Stihl . . . . . LG 320
Belts, Toro . . . . . LG 320–323
Belts, Troy-Bilt . . . . . LG 324
Belts, Walker . . . . . LG 325
Belts, Woods . . . . . LG 325–330
Belts, Wright Stander . . . . . LG 330–331
Belts, Yazoo . . . . . LG 297
Bench Model Chain Saw Chain Breaker . . . . . SFS 43
Bench Model Chain Saw Chain Rivet Spinner . . . . . SFS 44
Better Outdoors, blades . . . . . LG 383
BHT120VX Hedge Trimmer, 120v Professional Series™ . . . . . OPE 34
Big Bee, blades . . . . . LG 384
BL120VX Backpack Blower, 120v Professional Series™ . . . . . OPE 32
Black & Decker, bar & chain applications . . . . . FOR 22
Black & Decker, edger blades . . . . . LG 584
Blade Adaptors, AYP . . . . . LG 340
Blade Adaptors, Bobcat . . . . . LG 340
Blade Adaptors, Husqvarna . . . . . LG 340
Blade Adaptors, MTD . . . . . LG 340–341
Blade Adaptors, Murray . . . . . LG 342
Blade Adaptors, Sears . . . . . LG 342
Blade Adaptors, Snapper . . . . . LG 342
Blade Adaptors, Walker . . . . . LG 342

Blade Bolts . . . SFS 105
Blade Clutch, electric. . . . LG 733–741
Blade Holders . . . LG 340–342
**BLADES ADAPTORS . . . LG 340–342**
Blades by Length, chart . . . LG 350–366
Blades, Allis-Chalmers . . . LG 369
Blades, Ariens . . . LG 369–374
Blades, AYP . . . LG 374–382
Blades, Befco . . . LG 382
Blades, Better Outdoors . . . LG 383
Blades, Big Bee . . . LG 384
Blades, Billy Goat . . . LG 590
Blades, Bluebird . . . LG 590
Blades, Bobcat . . . LG 384–388
Blades, Bolens . . . LG 388–390
Blades, brush cutter . . . LG 1014
Blades, brush cutter clearing saw . . . LG 1014
Blades, brush cutter grass. . . . LG 1014
Blades, Bunton . . . LG 390–392
Blades, Bush Hog . . . LG 392–394
Blades, Caroni . . . LG 395
Blades, chain saw guide bars . . . FOR 148–179
Blades, Country Clipper . . . LG 395–397
Blades, Craftsman . . . LG 397–404
Blades, Cub Cadet . . . LG 404–412
Blades, dethatching . . . LG 368
Blades, Dixie Chopper . . . LG 413–416
Blades, Dixon . . . LG 416–428
Blades, DR. . . . LG 428–430
Blades, Dynamow . . . LG 430
Blades, edger . . . LG 584–590
Blades, Encore . . . LG 431–434
Blades, Everide . . . LG 434
Blades, Excel . . . LG 470–475
Blades, Exmark . . . LG 434–443
Blades, Ferris . . . LG 443–446
Blades, Ford/New Holland . . . LG 447
Blades, Giant Vac . . . LG 447–448
Blades, Goodall . . . LG 390–392
Blades, Grasshopper . . . LG 448–450
Blades, Gravely . . . LG 450–456
Blades, Great Dane . . . LG 456–457
Blades, hedge trimmers . . . LG 783
Blades, Honda. . . . LG 457–458
Blades, Huskee . . . LG 458
Blades, Husqvarna . . . LG 458–470
Blades, Hustler . . . LG 470–475
Blades, Ingersoll . . . LG 475
Blades, Jacobsen . . . LG 476–482
Blades, John Deere . . . LG 482–493
Blades, Kees . . . LG 494–497
Blades, King Kutter . . . LG 497
Blades, Kubota . . . LG 497–501
Blades, Land Pride . . . LG 501–503
Blades, Lastec . . . LG 503–504
Blades, Lawn Mower . . . LG 369–583
Blades, Lawn-Boy . . . LG 505
Blades, Lesco . . . LG 505–508
Blades, Massey Fergunson . . . LG 508–511
Blades, MTD. . . . LG 512–521
Blades, Murray . . . LG 522–528
**BLADES, OEM EXACT REPLACEMENT . . . LG 369–583**
Blades, Poulan . . . LG 529–533
Blades, Power Trim. . . . LG 586
Blades, Redhawk . . . LG 534–535
Blades, Scag . . . LG 535–537
Blades, scalping . . . LG 368
Blades, Scotts. . . . LG 537–539
Blades, Simplicity . . . LG 539–545
Blades, Snapper . . . LG 545–556
Blades, Spartan. . . . LG 557
Blades, Steiner . . . LG 557–558
Blades, Sutech . . . LG 559
Blades, Swisher . . . LG 559
Blades, Toro. . . . LG 560–573
Blades, Troy-Bilt . . . LG 573–576
Blades, universal . . . LG 368
Blades, Walker . . . LG 576
Blades, Woods . . . LG 577–579
Blades, Wright Stander. . . . LG 579–582
Blades, Zipper. . . . LG 583
Blower, BL300 Oregon® 40V MAX Cordless, hand-held. . . . OPE 18
Bobcat, anti-scalp wheels/rollers . . . LG 1037–1042
Bobcat, ball joints . . . LG 938–939
Bobcat, bearings . . . LG 228–230
Bobcat, belts . . . LG 267–269
Bobcat, blade adaptors . . . LG 340
Bobcat, blades . . . LG 384–388
Bobcat, bushings . . . LG 228–230
Bobcat, control cables . . . LG 703
Bobcat, drive pulleys . . . LG 835
Bobcat, electric PTO clutches . . . LG 733–741
Bobcat, idler pulleys . . . LG 825–826
Bobcat, in-line fuel filters . . . LG 774–776
Bobcat, pneumatic wheel assemblies . . . LG 1044–1046
Bobcat, PTO switches . . . LG 946–947
Bobcat, safety switches . . . LG 947–948
Bobcat, semi-pneumatic flat-free wheel assemblies. . . . LG 1044–1046
Bobcat, spindles . . . LG 874–875
Bobcat, wheels . . . LG 1029–1046
Bolens, anti-scalp wheels/rollers . . . LG 1037–1042
Bolens, blades . . . LG 388–390
Bolts, blade . . . SFS 105
Bolts, handle . . . SFS 105
Bolts, self tapping . . . SFS 105
Bolts, shoulder . . . SFS 105
Bolts, spindles . . . LG 910
Boot Liner, neoprene . . . SFS 113
Boots, premium leather . . . SFS 113
Boots, rubber forestry . . . SFS 113
Boxes, lawn mower blades . . . SFS 21
Boxes, parts bin. . . . SFS 21
Brake Band, Scag. . . . LG 698
Brake Band, Snapper. . . . LG 698
Brake Cables . . . LG 701–720
Brake Cleaner Spray . . . SFS 94
Brake, blade. . . . LG 802
Breaker, bench model chain saw chain. . . . SFS 43
Breaker, chain saw chain, pocket . . . SFS 47
Briggs & Stratton, carburetor diaphragms . . . LG 622–623
Briggs & Stratton, carburetor float bowls . . . LG 625
Briggs & Stratton, carburetor floats . . . LG 624
Briggs & Stratton, carburetor inlet needle valves . . . LG 628
Briggs & Stratton, carburetor kits. . . . LG 602–604
Briggs & Stratton, carburetors . . . LG 596
Briggs & Stratton, connecting rods . . . LG 750
Briggs & Stratton, electric starter brushes . . . LG 927
Briggs & Stratton, electric starter drives. . . . LG 926–927
Briggs & Stratton, electric starter gears . . . LG 927–928
Briggs & Stratton, foam air filters. . . . LG 185–189
Briggs & Stratton, fuel caps . . . LG 770
Briggs & Stratton, gasket sets. . . . LG 745
Briggs & Stratton, gaskets. . . . LG 745–749
Briggs & Stratton, ignition coils . . . LG 784–787
Briggs & Stratton, in-line fuel filters . . . LG 774–776
Briggs & Stratton, mufflers . . . LG 806–807
Briggs & Stratton, oil filler plug . . . LG 750
Briggs & Stratton, oil filters . . . LG 814–819
Briggs & Stratton, oil seals . . . LG 749
Briggs & Stratton, paper air filters . . . LG 179–185
Briggs & Stratton, piston rings . . . LG 750
Briggs & Stratton, points & condenser . . . LG 789
Briggs & Stratton, primer bulbs . . . LG 629–632
Briggs & Stratton, quick reference chart . . . LG 1048–1071
Briggs & Stratton, recoil starter pulleys . . . LG 933
Briggs & Stratton, recoil starter springs . . . LG 927
Briggs & Stratton, recoil starters . . . LG 923
Briggs & Stratton, rings . . . LG 750
Briggs & Stratton, rods. . . . LG 750
Briggs & Stratton, seals . . . LG 749
Briggs & Stratton, starter clutch . . . LG 929
Briggs & Stratton, starter handle . . . LG 930
Briggs & Stratton, starter motors. . . . LG 915–916
Briggs & Stratton, starter pawls & springs. . . . LG 930–931
Briggs & Stratton, voltage regulators. . . . LG 731
Brush Cutter Blades . . . LG 1014
Brush Cutter Blades, filing tools . . . LG 1015
Brushes, electric starters . . . LG 927
Bunton, bearings . . . LG 230
Bunton, belts . . . LG 269–270
Bunton, blades . . . LG 390–392
Bunton, bushings . . . LG 230
Bunton, electric PTO clutches . . . LG 733–741
Bunton, idler pulleys . . . LG 826–827

# 2019 Alphabetical Index – EN


Bunton, PTO switches . . . LG 946–947
Bunton, safety switches . . . LG 947–948
Bunton, spindles . . . LG 874–875
Bunton, wheels . . . LG 1029–1046
Bush Hog, belts . . . LG 270–271
Bush Hog, blades . . . LG 392–394
Bush Hog, spindles . . . LG 876–877
Bushing, machinery . . . SFS 106
Bushings by Type, chart . . . LG 249
Bushings, AMF . . . LG 243
Bushings, Ariens . . . LG 225–227
Bushings, AYP . . . LG 227–228
Bushings, Bobcat . . . LG 228–230
Bushings, Bunton . . . LG 230
Bushings, Cub Cadet . . . LG 231-232
Bushings, EHP . . . LG 227–228
Bushings, Encore . . . LG 232
Bushings, Exmark . . . LG 233-234
Bushings, Grasshopper . . . LG 234–235
Bushings, Gravely . . . LG 235
Bushings, John Deere . . . LG 237–238
Bushings, K&S . . . LG 238
Bushings, MTD . . . LG 239–242
Bushings, Murray . . . LG 242–243
Bushings, Noma . . . LG 243
Bushings, Roper . . . LG 227–228
Bushings, Scag . . . LG 244
Bushings, Sears . . . LG 227–228
Bushings, Simplicity . . . LG 244–245
Bushings, Snapper . . . LG 245–246


## C


C1600 Charger, 120v Professional Series™ . . . OPE 36
C600 Battery Charger . . . OPE 10
C750 Rapid Battery Charger . . . OPE 10
Cable Ties . . . LG 742
Cables, battery . . . LG 744
Cables, brake . . . LG 701–720
Cables, choke . . . LG 701–720
Cables, control . . . LG 701–720
Cables, deck engagement . . . LG 701–720
Cables, drive control . . . LG 701–720
Cables, PTO . . . LG 701–720
Cables, self propelled control . . . LG 701–720
Cables, snow thrower auger control . . . LG 701–720
Cables, snow thrower chute control . . . LG 701–720
Cables, snow thrower steering control . . . LG 701–720
Cables, throttle . . . LG 701–720
Caged Roller Bearings . . . LG 223
Canada Only Fuel Cans . . . SFS 90–91
Cans, fuel . . . SFS 86–88
Carburetor Cleaner, spray . . . SFS 93
Carburetor Diaphragms, Briggs & Stratton . . . LG 622–623
Carburetor Diaphragms, Tecumseh . . . LG 623
Carburetor Float Bowl Gaskets . . . LG 626–627
Carburetor Float Bowl Gaskets, Briggs & Stratton . . . LG 627
Carburetor Float Bowl Gaskets, Honda . . . LG 626–627
Carburetor Float Bowl Gaskets, Lawn-Boy . . . LG 626–627
Carburetor Float Bowl Gaskets, Oregon® . . . LG 626–627
Carburetor Float Bowl Gaskets, Walbro . . . LG 627
Carburetor Float Bowls . . . LG 625
Carburetor Float Bowls, Briggs & Stratton . . . LG 625
Carburetor Float Bowls, Honda . . . LG 625
Carburetor Float Bowls, Tecumseh . . . LG 625
Carburetor Floats . . . LG 624–625
Carburetor Floats, Briggs & Stratton . . . LG 624
Carburetor Floats, Honda . . . LG 624
Carburetor Floats, Oregon® . . . LG 624–625
Carburetor Floats, Tecumseh . . . LG 625
Carburetor Fuel Screens . . . LG 627
Carburetor Inlet Needle Valves . . . LG 628–629
Carburetor Kit Reference Charts . . . LG 634–674
Carburetor Kits . . . LG 602–621
Carburetor Kits, Briggs & Stratton . . . LG 602–604
Carburetor Kits, Cub Cadet . . . LG 604–605
Carburetor Kits, Homelite . . . LG 605
Carburetor Kits, Honda . . . LG 605
Carburetor Kits, Kohler . . . LG 605
Carburetor Kits, Lawn-Boy . . . LG 606
Carburetor Kits, MTD . . . LG 606
Carburetor Kits, Nikki . . . LG 606
Carburetor Kits, Oregon® . . . LG 606–608
Carburetor Kits, Tecumseh . . . LG 608–609
Carburetor Kits, Tillotson . . . LG 609–610
Carburetor Kits, TK . . . LG 608
Carburetor Kits, Walbro . . . LG 608–614
Carburetor Kits, Zama . . . LG 614–621
Carburetor Welch Plugs . . . LG 632–633
Carburetor, Briggs & Stratton . . . LG 596
Carburetor, Honda . . . LG 596–597
Carburetor, Robin . . . LG 596
Carburetor, Tecumseh . . . LG 598–601
Carburetor, Tillotson . . . LG 595
Carburetor, Walbro . . . LG 595
Carburetor, Yamakoyo . . . LG 601
Carburetor, Zama . . . LG 595
**CARBURETORS & CARBURETOR PARTS . . . LG 594–674**
Carburetors, Complete . . . LG 595–601
Caroni, blades . . . LG 395
Caroni, spindles . . . LG 877
Caster Parts . . . LG 694–695
Catalog, Oregon® . . . SFS 23
Catcher, log splitters . . . OPE 46
**CENTRIFUGAL CLUTCHES . . . LG 675**
Chain Adjusters, chain saws . . . LG 686–687
Chain Cutter Displays, Oregon® chain saw chain . . . SFS 23
**CHAIN ROLLER PARTS . . . LG 676**
**CHAIN SAW & CUT-OFF SAW PARTS . . . LG 677–693**
Chain Saw, air filters . . . LG 678–684
Chain Saw, bar & chain combos . . . FOR 100–101
Chain Saw, bar & chain oil . . . SFS 19, 84
Chain Saw, bar & chain saw chain measuring tool . . . SFS 14
Chain Saw, bar & chain, applications . . . FOR 21–97
Chain Saw, bar & rail dresser tool . . . SFS 13
Chain Saw, bar covers . . . SFS 13
Chain Saw, bar groove cleaning tool . . . SFS 14
Chain Saw, bar mounts . . . FOR 171–177
Chain Saw, bar nuts . . . LG 686
Chain Saw, bar photographs, descriptions, features . . . FOR 154-166
Chain Saw, bar replaceable noses . . . FOR 167
Chain Saw, bars, guide bars, chain saw blades . . . FOR 148–179
Chain Saw, chain adjusters . . . LG 686–687
Chain Saw, chain breaker & chain saw bar nose rivet driver, heavy duty . . . SFS 45
Chain Saw, chain breaker, bench model . . . SFS 43
Chain Saw, chain conversion chart, Oregon® consumer chain P/Ns to Pro chain P/Ns . . . FOR 98
Chain Saw, chain conversion charts, chain lengths & drive link counts . . . FOR 147
Chain Saw, chain cross reference chart, Oregon® & other Brands . . . FOR 138–139
Chain Saw, chain filing chart . . . FOR 141
Chain Saw, chain grinder stand . . . SFS 41
Chain Saw, chain grinders . . . SFS 32–40
Chain Saw, chain grinders 4-1/8" grinding wheels . . . SFS 41
Chain Saw, chain grinders 5-3/4" grinding wheels . . . SFS 40
Chain Saw, chain grinders, breakers & spinners . . . SFS 26–57
Chain Saw, chain grinding chart . . . FOR 141
Chain Saw, chain how to order chain . . . FOR 98
Chain Saw, chain photographs, descriptions, features . . . FOR 111–137
Chain Saw, chain replacements parts . . . FOR 143
Chain Saw, chain rivet spinner, bench model . . . SFS 44
Chain Saw, chain rivet spinner, heavy duty . . . SFS 46
Chain Saw, chain saw oil, wedges, screnches, misc . . . SFS 14, 19–20
Chain Saw, chain scale . . . SFS 47
Chain Saw, chain sharpening kits . . . SFS 10
Chain Saw, chain tensioners . . . LG 686–687
Chain Saw, CS300 Oregon® 40V MAX Cordless . . . OPE 15
Chain Saw, electrical parts . . . LG 684–686
Chain Saw, fuel caps . . . LG 690
Chain Saw, fuel filters . . . LG 691–692
Chain Saw, fuel lines . . . LG 688–690
Chain Saw, guide bars, bars, chain saw blades . . . FOR 148–179
Chain Saw, oil caps . . . LG 690
Chain Saw, primer bulbs . . . LG 690
Chain Saw, sprocket application by Oregon® part number . . . FOR 204–208
Chain Saw, sprocket application by saw model . . . FOR 187–203
Chain Saw, sprocket photographs, descriptions, features . . . FOR 182–186
Chain Saw, sprockets . . . FOR 180–210
Chain Saw, starter pulleys . . . LG 692
Chain Saw, starter springs . . . LG 693
Chain Saw, terminology, parts of a chain, chain sequence . . . FOR 110
Chain Saw, tool bag . . . OPE 23
Chain Saw, wrench . . . LG 677

Chain Sharpener Grinding Wheels . . . LG 687
Chain Tensioners, chain saws . . . LG 686–687
Chain, roller connecting links . . . LG 676
Chain, roller half links . . . LG 676
Chain, roller offset links . . . LG 676
Chain, saw chain . . . FOR 103–147
Chains, tire . . . LG 965
Chaps . . . SFS 114
Charger, battery . . . LG 743
Chart, ANSI saw chain classification . . . FOR 2
Chart, bar & chain applications . . . FOR 21–97
Chart, bar & chain combos . . . FOR 100–101
Chart, chain saw sprockets, application by saw models . . . FOR 187–203
Chart, chain saw sprockets, application, by Oregon® part number . . . FOR 204–208
Chart, saw chain filing specification . . . FOR 140–141
Chart, saw chain length conversions & drive link counts . . . FOR 147
Chart, saw chain replacement parts . . . FOR 143
Chicago Electric, bar & chain applications . . . FOR 22
Choke Cables . . . LG 701–720
Clamps, hose . . . LG 765
Cleaning Solvent . . . SFS 94
Clearing Saw Blades . . . LG 1014
Clevis Pins, display pack . . . LG 799
Clevises . . . LG 793
Club Car, belts . . . LG 272
Clutch, electric PTO . . . LG 733–741
Coils, ignition . . . LG 784–787
Coils, magneto . . . LG 784–787
Comet, belts . . . LG 272
Commercial Equipment Racks . . . SFS 74–76
Commercial Mower, caster wheel parts . . . LG 694–695
Commercial Mower, spacers & bushings . . . LG 697
Commercial Mower, wheel motors . . . LG 696
**COMMERCIAL PARTS . . . LG 694–698**
Compact Electric Rivet Spinner . . . SFS 42
Complete Replacement Carburetors . . . LG 595–601
Compression Tester . . . SFS 65
Compressor, rings . . . SFS 66
Compressor, valve spring . . . SFS 66
Connecting Rods, Briggs & Stratton . . . LG 750
Connecting Rods, Honda . . . LG 755
**CONTROL CABLES . . . LG 699–723**
Control Cables, AYP . . . LG 701–703
Control Cables, Bobcat . . . LG 703
Control Cables, Cub Cadet . . . LG 703–708
Control Cables, Dixie Chopper . . . LG 708
Control Cables, Excel . . . LG 708
Control Cables, Gravely . . . LG 708
Control Cables, Honda . . . LG 708–709
Control Cables, Hustler . . . LG 708
Control Cables, John Deere . . . LG 709
Control Cables, McClane . . . LG 709
Control Cables, MTD . . . LG 710–715
Control Cables, Murray . . . LG 715–717
Control Cables, push-pull . . . LG 720–721
Control Cables, Scag . . . LG 717–718
Control Cables, Snapper . . . LG 718–719
Control Cables, Toro . . . LG 719–720
Control Cables, universal . . . LG 699–701
Control Cables, Wisconsin . . . LG 720
Cordless Multi-Attachment System . . . OPE 11–14
Cordless Multi-Attachment, EG600 Edger . . . OPE 13
Cordless Multi-Attachment, EX600 Extension . . . OPE 12
Cordless Multi-Attachment, HT600 Hedge Trimmer . . . OPE 13
Cordless Multi-Attachment, PH600 Power Head . . . OPE 12
Cordless Multi-Attachment, PS600 Pole Saw . . . OPE 12
Cordless Multi-Attachment, ST600 String Trimmer . . . OPE 13
Cordless Tool System, Battery Chargers . . . OPE 10
Cordless Tool System, BL300 Oregon® 40V MAX, blower . . . OPE 18
Cordless Tool System, CS300 Oregon® 40V MAX, chain saw . . . OPE 15
Cordless Tool System, HT250 Oregon® 40V MAX, hedge trimmer . . . OPE 21
Cordless Tool System, LM300 Oregon® 40V MAX, lawn mower . . . OPE 16
Cordless Tool System, LM400 Oregon® 40V MAX, lawn mower . . . OPE 17
Cordless Tool System, Point of Purchase Displays . . . OPE 27–29
Cordless Tool System, PowerNow™ Lithium Ion Battery Packs . . . OPE 10
Cordless Tool System, PS250 Oregon® 40V MAX, pole saw . . . OPE 20
Cordless Tool System, ST275 Oregon® 40V MAX, trimmer/edger . . . OPE 19
Cordless Tool System, WL275 Oregon® 40V MAX, portable light . . . OPE 22
Corona Clipper, bar & chain applications . . . FOR 23
Cotter Pin Assortment . . . SFS 100
Cotter Pins, display pack . . . LG 799
Country Clipper, belts . . . LG 272
Country Clipper, blades . . . LG 395–397
Cover, battery terminal . . . LG 743
Cover, riding mower . . . LG 803
Covers, chain saw bars . . . SFS 13
Craftsman, belts . . . LG 315
Craftsman, blades . . . LG 397–404
Crayons, marking . . . SFS 19
CS1500 Guide Bar . . . OPE 25
CS250 Guide Bar . . . OPE 25
CS300 Guide Bar . . . OPE 25
Cub Cadet, anti-scalp wheels/rollers . . . LG 1037–1042
Cub Cadet, bar & chain applications . . . FOR 25
Cub Cadet, bearings . . . LG 231-232
Cub Cadet, belts . . . LG 273–277
Cub Cadet, blades . . . LG 404–412
Cub Cadet, bushings . . . LG 231-232
Cub Cadet, carburetor kits . . . LG 604–605
Cub Cadet, control cables . . . LG 703–708
Cub Cadet, drive pulleys . . . LG 837
Cub Cadet, electric PTO clutches . . . LG 733–741
Cub Cadet, idler pulleys . . . LG 826–827
Cub Cadet, ignition switches . . . LG 942–945
Cub Cadet, muffler . . . LG 807
Cub Cadet, PTO switches . . . LG 946–947
Cub Cadet, safety switches . . . LG 947–948
Cub Cadet, snow thrower 120V starters . . . LG 861
Cub Cadet, snow thrower bearings . . . LG 854–855
Cub Cadet, snow thrower bronze worm gear . . . LG 856
Cub Cadet, snow thrower bushings . . . LG 854–855
Cub Cadet, snow thrower carburetor kits . . . LG 859
Cub Cadet, snow thrower chute flange keeper . . . LG 855
Cub Cadet, snow thrower chute tilt cable guide . . . LG 856
Cub Cadet, snow thrower clutch lock cam . . . LG 856
Cub Cadet, snow thrower control cables . . . LG 856–859
Cub Cadet, snow thrower ignition key . . . LG 861
Cub Cadet, snow thrower lock plate . . . LG 856
Cub Cadet, snow thrower primer . . . LG 860
Cub Cadet, snow thrower recoil starters . . . LG 860–861
Cub Cadet, snow thrower shave plates . . . LG 848
Cub Cadet, snow thrower steering control trigger . . . LG 856
Cub Cadet, snow thrower wheel . . . LG 856
Cub Cadet, spindles . . . LG 878–883
Cub Cadet, sprocket applications . . . FOR 187
Cupped Steel Washers . . . SFS 106
Cut-Off Saw, air filters . . . LG 678–684
Cut-Off Saw, belts . . . LG 684
Cut-Off Saw, electrical parts . . . LG 684–686
Cutter, trimmer line . . . LG 985
Cutting, chain saw chain . . . FOR 103–147


## D


Damper Cylinders . . . LG 695
Dayton, sprocket applications . . . FOR 187
Deck Engagement Cables . . . LG 701–720
Deck Leveling Tool, lawn mowers . . . SFS 64
Depth Gauge Tools, chain saw chain . . . SFS 8
Dethatching Blades . . . LG 368
DeWalt, bar & chain applications . . . FOR 26
Diaphragms, carburetors . . . LG 622–623
Diodes . . . LG 741
Dipstick, Honda . . . LG 756
Display Hook, 5" . . . SFS 20
Display Pack, clevis pins . . . LG 799
Display Pack, cotter pins . . . LG 799
Display Pack, e-rings . . . LG 799
Display Pack, grease fittings . . . LG 800
Display Pack, hair pins . . . LG 800
Display Pack, locking pins . . . LG 800
Display Pack, machinery keys . . . LG 801
Display Pack, shaft collars . . . LG 801
Display Pack, spring pins . . . LG 801
Display Pack, woodruff keys . . . LG 801
Display Rack, safety eyewear . . . SFS 20
Disposable Grease Gun . . . SFS 12–13
Disposable Respirator Masks . . . SFS 120
Dixie Chopper, belts . . . LG 277
Dixie Chopper, blades . . . LG 413–416
Dixie Chopper, control cables . . . LG 708
Dixie Chopper, electric PTO clutches . . . LG 733–741

# 2019 Alphabetical Index – EN


Dixie Chopper, idler pulleys . . . LG 827
Dixie Chopper, semi-pneumatic flat-free wheel assemblies . . . LG 1044–1046
Dixie Chopper, spindles . . . LG 883
Dixon, bearings . . . LG 232
Dixon, belts . . . LG 278
Dixon, blades . . . LG 416–428
Dixon, pneumatic wheel assemblies . . . LG 1044–1046
Dixon, semi-pneumatic flat-free wheel assemblies . . . LG 1044–1046
Dixon, spindles . . . LG 883–884
Dolmar, bar & chain applications . . . FOR 26–29
Dolmar, recoil starter springs . . . LG 937
Dolmar, sprocket applications . . . FOR 187–188
Drag Links . . . LG 939
Drain Pan, oil . . . SFS 67
Draw Pins . . . LG 795
Drawbars . . . LG 793
Dressing Tools, chain saw chain grinders grinding wheels . . . SFS 41
Drive Control Cables . . . LG 701–720
Drive Disc, snow thrower . . . LG 851
Drive Discs . . . LG 726
**DRIVE PARTS . . . LG 724–728**
Drive Pulleys . . . LG 834–840
Drive Pulleys by Size, chart . . . LG 841
Drive Pulleys, AYP . . . LG 834
Drive Pulleys, Bobcat . . . LG 835
Drive Pulleys, Cub Cadet . . . LG 837
Drive Pulleys, Exmark . . . LG 836
Drive Pulleys, MTD . . . LG 837–838
Drive Pulleys, Murray . . . LG 838–839
Drive Pulleys, OEM replacement . . . LG 834–840
Drive Pulleys, Power Trim . . . LG 839
Drive Pulleys, Scag . . . LG 839–840
Drive Pulleys, Snapper . . . LG 840
Drive Sprockets, chain saws . . . FOR 180–210
Dynamark, belts . . . LG 278
Dynamow, blades . . . LG 430


## E


E-Clips, assortment . . . SFS 100
E-Rings, display pack . . . LG 799
E-Z Roll, belts . . . LG 278
Earmuff, hearing safety . . . SFS 121
Earth Quake, edger blades . . . LG 584
Earthquake, bar & chain applications . . . FOR 29
Earthwise, bar & chain applications . . . FOR 29–30
Echo, air filters . . . LG 189–191
Echo, bar & chain applications . . . FOR 30–33
Echo, edger blades . . . LG 584
Echo, fuel caps . . . LG 770–771
Echo, recoil starter pulleys . . . LG 933
Echo, recoil starter springs . . . LG 937
Echo, sprocket applications . . . FOR 188–189
Echo, starter pawls & springs . . . LG 930–931
Echo, trimmer & blower parts . . . LG 1016–1018
**EDGER BLADES . . . LG 584–590**
Edger Blades by Length, chart . . . LG 589
Edger Blades, Ariens . . . LG 584
Edger Blades, Black & Decker . . . LG 584
Edger Blades, Earth Quake . . . LG 584
Edger Blades, Echo . . . LG 584
Edger Blades, Homelite . . . LG 584
Edger Blades, Husqvarna . . . LG 585
Edger Blades, Jacobesn . . . LG 585
Edger Blades, John Deere . . . LG 585
Edger Blades, Kawasaki . . . LG 585
Edger Blades, Lawn-Boy . . . LG 585
Edger Blades, Lesco . . . LG 585
Edger Blades, Little Wonder . . . LG 585
Edger Blades, Maruyama . . . LG 586
Edger Blades, McClane . . . LG 586
Edger Blades, McCulloch . . . LG 586
Edger Blades, MTD . . . LG 586
Edger Blades, Power Trim . . . LG 586
Edger Blades, RedMax . . . LG 587
Edger Blades, Ryobi . . . LG 587
Edger Blades, Sears . . . LG 587
Edger Blades, Shindaiwa . . . LG 587
Edger Blades, Stihl . . . LG 587
Edger Blades, Tanaka . . . LG 588
Edger Blades, Troy-Bilt . . . LG 588
Edger Blades, universal . . . LG 588–589
Edger Blades, Weed Eater . . . LG 588
Efco, air filters . . . LG 210
Efco, bar & chain applications . . . FOR 33–35
Efco, sprocket applications . . . FOR 189
EG120VX Edger, 120v Professional Series™ . . . OPE 35
EG600 Edger, Cordless Multi-Attachment . . . OPE 13
EHP Bearings . . . LG 227–228
EHP Bushings . . . LG 227–228
Electric PTO Clutch . . . LG 733–741
Electric Starter, brushes . . . LG 927
Electric Starter, drives . . . LG 926–927
Electric Starter, gears . . . LG 927–928
Electric Starter, motors . . . LG 915–921
Electric Starter, parts . . . LG 926–928
**ELECTRICAL PARTS . . . LG 729–744**
Electrical Parts, chain saws . . . LG 684–686
Electrical Parts, cut-off saws . . . LG 684–686
Electrical Terminals & Connectors, assortment . . . SFS 100
Encore, bearings . . . LG 232
Encore, belts . . . LG 278
Encore, blades . . . LG 431–434
Encore, bushings . . . LG 232
Encore, electric PTO clutches . . . LG 733–741
Enginaire, air filters . . . LG 203
**ENGINE PARTS . . . LG 745–760**
Engine Treatment, sea foam . . . SFS 81
Engine Treatments . . . SFS 81
Engine, Only One™ 2-Cycle . . . SFS 19
Ethanol Free Fuel, VP Fuels . . . SFS 79–81
Everide, blades . . . LG 434
EX600 Extension, Cordless Multi-Attachment . . . OPE 12
Excel, belts . . . LG 279
Excel, blades . . . LG 470–475
Excel, control cables . . . LG 708
Excel, idler pulleys . . . LG 827
Excel, spindles . . . LG 884
Exhaust Valves, Honda . . . LG 755
Exmark, air filters . . . LG 191
Exmark, anti-scalp wheels/rollers . . . LG 1037–1042
Exmark, ball joints . . . LG 938–939
Exmark, bearings . . . LG 233-234
Exmark, belts . . . LG 279–283
Exmark, blades . . . LG 434–443
Exmark, bushings . . . LG 233-234
Exmark, drive pulleys . . . LG 836
Exmark, electric PTO clutches . . . LG 733–741
Exmark, fuel caps . . . LG 771
Exmark, idler pulleys . . . LG 827–828
Exmark, pneumatic wheel assemblies . . . LG 1044–1046
Exmark, PTO switches . . . LG 946–947
Exmark, safety switches . . . LG 947–948
Exmark, semi-pneumatic flat-free wheel assemblies . . . LG 1044–1046
Exmark, spindles . . . LG 884–889
Extension Springs, assortment . . . SFS 104
Extractor, fuel . . . SFS 67
Extractor, oil . . . SFS 67
Eye-Ware, safety . . . SFS 117–119
EZ-Go, belts . . . LG 283


## F


Fairmont Hydraulic, bar & chain applications . . . FOR 35–36
Fast Orange Hand Cleaner . . . SFS 91
Feeler Gauge . . . SFS 65
Felling Lever . . . SFS 18
Felling Wedges . . . SFS 14
Ferris, anti-scalp wheels/rollers . . . LG 1037–1042
Ferris, bearings . . . LG 234
Ferris, belts . . . LG 283–284
Ferris, blades . . . LG 443–446
Ferris, spindles . . . LG 889
Fiber Washers . . . SFS 106
**FIELD SUPPLIES . . . SFS 72–107**
File Guide, chain saw chain . . . SFS 9
File Handles, chain saw chain . . . SFS 9
Filing Tools for Brush Cutter Blades . . . LG 1015
Filter Bowl . . . LG 765
Filters, air . . . LG 178-222

Filters, fuel in-line . . . LG 774–776
Filters, hydraulic oil . . . LG 819
Filters, oil . . . LG 814–819
Fittings, fuel . . . LG 765–766
Fix-It Fuel, VP Fuels . . . SFS 81
Flammable Liquids Storage Cabinets . . . SFS 89–90
Flanged Wheel Bearings . . . LG 224
Flat Steel Washers . . . SFS 106
Float Bowl Gaskets . . . LG 626–627
Float Bowl Gaskets, Briggs & Stratton . . . LG 627
Float Bowl Gaskets, Honda . . . LG 626–627
Float Bowl Gaskets, Lawn-Boy . . . LG 626–627
Float Bowl Gaskets, Oregon® . . . LG 626–627
Float Bowl Gaskets, Walbro . . . LG 627
Float Bowls, carburetors . . . LG 625
Float Valves . . . LG 628–629
Floats, carburetors . . . LG 624–625
Flywheel Keys . . . LG 789
Flywheel Puller . . . SFS 65
Flywheel Shear Pins . . . LG 789
Ford/New Holland, blades . . . LG 447
Frontier, sprocket applications . . . FOR 189
Fuel Barbs . . . LG 765
Fuel Cans . . . SFS 86–88
Fuel Cans, Canada only . . . SFS 90–91
Fuel Caps . . . LG 770–773
Fuel Caps, Briggs & Stratton . . . LG 770
Fuel Caps, chain saws . . . LG 690
Fuel Caps, Echo . . . LG 770–771
Fuel Caps, Exmark . . . LG 771
Fuel Caps, Homelite . . . LG 771
Fuel Caps, Honda . . . LG 771
Fuel Caps, Kawasaki . . . LG 772
Fuel Caps, Maruyama . . . LG 772
Fuel Caps, MTD . . . LG 772
Fuel Caps, Scag . . . LG 772
Fuel Caps, Shindaiwa . . . LG 772
Fuel Caps, Stihl . . . LG 773
Fuel Caps, Tanaka . . . LG 773
Fuel Caps, Toro . . . LG 773
Fuel Extractor . . . SFS 67
Fuel Filter, bowl type . . . LG 765
Fuel Filters, chain saws . . . LG 691–692
Fuel Filters, in-line . . . LG 774–776
Fuel Filters, in-tank . . . LG 776–779
Fuel Fittings . . . LG 765
Fuel Line . . . LG 761–763
**FUEL LINE & ACCESSORIES . . . LG 761–780**
Fuel Line Shut-Off Valves . . . LG 766–767
Fuel Line Shut-Offs . . . LG 766–767
Fuel Line, Oregon® . . . LG 761
Fuel Line, Tygon® . . . LG 761
Fuel Lines, chain saws . . . LG 688–690
Fuel Pump . . . LG 767
Fuel Screens . . . LG 627
Fuel Stabilizer . . . SFS 85
Fuel System Breathers . . . LG 763–764
Fuel System Grommets . . . LG 763–764
Fuel System Kits . . . LG 764–765
Fuel System Vents . . . LG 763–764
Fuel Tank Bushing . . . LG 767
Fuel Tank Strap, Scag . . . LG 698
Fuel Tanks . . . LG 770
Fuel Tanks, Honda . . . LG 770
Full-Wrap Chaps . . . SFS 114
Fuse Holders . . . LG 742
Fuses . . . LG 742


## G


Gasket Scraper . . . LG 760
Gasket Set, Kohler . . . LG 757
Gasket Set, Tecumseh . . . LG 757
Gasket Sets, Briggs & Stratton . . . LG 745
Gasket Sets, Honda . . . LG 751
Gasket, Kohler . . . LG 757
Gasket, Tecumseh . . . LG 758–759
Gaskets, 2-cycle engine intake . . . LG 621
Gaskets, Briggs & Stratton . . . LG 745–749
Gaskets, Honda . . . LG 751–753
Gaskets, intake 2-cycle engines assortment . . . SFS 103
Gator® SpeedLoad™ Application Chart . . . LG 974–978
Gator® SpeedLoad™ Replacement Parts . . . LG 973
Gator® SpeedLoad™ Replacement Trimmer Line . . . LG 973
Gator® SpeedLoad™ Trimmer Head . . . LG 968–978
Gatorline Trimmer Line for ST275 . . . OPE 26
Gauge, feeler . . . SFS 65
Gear Drive Power . . . OPE 20
Gear Lubricant, "0" . . . SFS 92
Gear Lubricant, "00" . . . SFS 92
Gear Lubricant, 80–90 WT . . . SFS 92
Gear Puller . . . SFS 65
Gears, electric starters . . . LG 927–928
Generac, oil filters . . . LG 814–819
Giant Vac, blades . . . LG 447–448
Gilson, spindles . . . LG 891
Glasses, safety . . . SFS 117–119
Gloves . . . SFS 116
Glue, Gorilla . . . SFS 97
Goggles, safety . . . SFS 117–119
Goodall, blades . . . LG 390–392
Gorilla Glue . . . SFS 97
**GRASS BAGS . . . LG 781–782**
Grass Catchers . . . LG 781–782
Grasshopper, anti-scalp wheels/rollers . . . LG 1037–1042
Grasshopper, bearings . . . LG 234–235
Grasshopper, belts . . . LG 284–285
Grasshopper, blades . . . LG 448–450
Grasshopper, bushings . . . LG 234–235
Grasshopper, electric PTO clutches . . . LG 733–741
Grasshopper, idler pulleys . . . LG 828
Grasshopper, pneumatic wheel assemblies . . . LG 1044–1046
Grasshopper, PTO switches . . . LG 946–947
Grasshopper, safety switches . . . LG 947–948
Grasshopper, spindles . . . LG 890
Gravely, anti-scalp wheels/rollers . . . LG 1037–1042
Gravely, bearings . . . LG 235
Gravely, belts . . . LG 285–287
Gravely, blades . . . LG 450–456
Gravely, bushings . . . LG 235
Gravely, control cables . . . LG 708
Gravely, electric PTO clutches . . . LG 733–741
Gravely, muffler . . . LG 807
Gravely, PTO switches . . . LG 946–947
Gravely, safety switches . . . LG 947–948
Gravely, semi-pneumatic flat-free wheel assemblies . . . LG 1044–1046
Gravely, spindles . . . LG 890–891
Grease "0" . . . LG 728
Grease "00" . . . LG 728
Grease Cartridges . . . SFS 12
Grease Fittings, assortment . . . SFS 101
Grease Fittings, display pack . . . LG 800
Grease Gun, disposable . . . SFS 12–13
Grease Guns, chain saw bars . . . SFS 12–13
Grease, High Temp, 14oz. cartridge . . . SFS 92
Great Dane, belts . . . LG 287–288
Great Dane, blades . . . LG 456–457
Great Dane, electric PTO clutches . . . LG 733–741
Great Dane, spindles . . . LG 891
Green Machine, recoil starter pulleys . . . LG 936
Green Machine, recoil starter springs . . . LG 937
Greenworks, bar & chain applications . . . FOR 36–37
Grinders, lawn mower blades . . . SFS 58–63
Grinders, saw chain . . . SFS 32–40
Grinding Wheel Dressing Tools, chain saw chain grinders . . . SFS 41
Grinding Wheel, chain sharpener . . . LG 687
Grommet, fuel tank fitting . . . LG 767
Groove Cleaning Tool, chain saw bar . . . SFS 14
Guard, belt . . . LG 802
**GUIDE BARS . . . FOR 148–179**
GUIDE BARS – Saw Mounts . . . FOR 171–177
Guide Bars for OPE . . . OPE 25
Guide Bars, Oregon® bar families . . . FOR 150–169
Guide Bars, part numbering system . . . FOR 152–153

# 2019 Alphabetical Index – EN

## H


Hair Pins, assortment . . . SFS 100
Hair Pins, display pack . . . LG 800
Hand Cleaner, Fast Orange. . . . SFS 91
Hand Towellet, Wypall pre-moistened . . . SFS 68
Hand–Held Blower, Oregon® 40V MAX Cordless . . . OPE 18
Handle Bolts . . . SFS 105
Handle Knobs . . . LG 802
Handles, recoil starters . . . LG 929–930
Hearing Safety Earmuffs. . . . SFS 121
Heavy Duty Chain Saw Chain Breaker & Chain Saw Bar Nose Rivet Driver . . . SFS 45
Heavy Duty Chain Saw Chain Rivet Spinner . . . SFS 46
**HEDGE TRIMMER BLADES . . . LG 783**
Hedge Trimmer Kit with Battery Pack . . . OPE 21
Hedge Trimmer, HT250 Oregon® 40V MAX Cordless . . . OPE 21
Helmet, safety . . . SFS 112
Hemostat . . . SFS 65
High Temp Grease, 14oz. cartridge . . . SFS 92
Hitachi, bar & chain applications . . . FOR 37–38
Hitch Pins . . . LG 795
Hitch Pins, bent . . . LG 796
Hitch Pins, red head . . . LG 796
Hoffco Recoil Starter Springs . . . LG 937
Holder, marking crayon . . . SFS 19
Homelite, air filters . . . LG 191–192
Homelite, bar & chain applications . . . FOR 38–40
Homelite, carburetor kit . . . LG 605
Homelite, edger blades . . . LG 584
Homelite, fuel caps . . . LG 771
Homelite, recoil starter pulleys . . . LG 934
Homelite, recoil starter springs . . . LG 937
Homelite, sprocket applications. . . . FOR 189–190
Homelite, trimmer & blower parts . . . LG 1019
Honda, air filter cover assembly . . . LG 196
Honda, bearings . . . LG 235
Honda, belts. . . . LG 288
Honda, blades. . . . LG 457–458
Honda, carburetor float bowls. . . . LG 625
Honda, carburetor floats. . . . LG 624
Honda, carburetor inlet needle valves . . . LG 628–629
Honda, carburetor insulator . . . LG 601
Honda, carburetor kits . . . LG 605
Honda, carburetors. . . . LG 596–597
Honda, connecting rods . . . LG 755
Honda, control cables . . . LG 708–709
Honda, dipstick . . . LG 756
Honda, exhaust valves . . . LG 755
Honda, foam air filters . . . LG 195–196
Honda, fuel caps . . . LG 771
Honda, fuel tanks . . . LG 770
Honda, gasket sets . . . LG 751
Honda, gaskets . . . LG 751–753
Honda, ignition coils . . . LG 784–787
Honda, intake valves . . . LG 755
Honda, long heads . . . LG 755
Honda, muffler . . . LG 807–808
Honda, muffler pipe . . . LG 807–808
Honda, oil filler plug . . . LG 756
Honda, oil filters . . . LG 814–819
Honda, oil seals. . . . LG 756
Honda, oil sensor switches . . . LG 950
Honda, on/off switches . . . LG 949
Honda, paper air filters. . . . LG 192–194
Honda, piston . . . LG 754
Honda, piston rings. . . . LG 754
Honda, recoil starter pulleys . . . LG 934
Honda, recoil starter springs . . . LG 937
Honda, recoil starters . . . LG 922–923
Honda, rings. . . . LG 754
Honda, rods . . . LG 755
Honda, seals . . . LG 756
Honda, snow thrower paddles. . . . LG 846
Honda, snow thrower scraper bars . . . LG 847
Honda, snow thrower shear bolts. . . . LG 852–853
Honda, snow thrower skids . . . LG 850
Honda, starter center screw. . . . LG 929
Honda, starter cups . . . LG 929
Honda, starter handle . . . LG 930
Honda, starter motors . . . LG 918
Honda, starter pawls & springs . . . LG 930–931
Honda, stop switches . . . LG 949
Honda, wheels . . . LG 1029–1046
Hose & Grommet Fuel system Kits . . . LG 764–765
Hose Clamps . . . LG 765
Hose Clamps Assortment . . . SFS 104
Hour Meter . . . LG 741
HT250 Hedge Trimmer, cordless electric. . . . OPE 21
HT600 Hedge Trimmer, Cordless Multi-Attachment . . . OPE 13
Huskee, blades . . . LG 458
Husqvarna, air filters. . . . LG 197–198
Husqvarna, bar & chain applications . . . FOR 40–47
Husqvarna, belts . . . LG 288–292
Husqvarna, blade adaptors . . . LG 340
Husqvarna, blades . . . LG 458–470
Husqvarna, drag links . . . LG 939
Husqvarna, edger blades . . . LG 585
Husqvarna, electric PTO clutches . . . LG 733–741
Husqvarna, ignition coils. . . . LG 784–787
Husqvarna, ignition switches . . . LG 942–945
Husqvarna, on/off switches . . . LG 949
Husqvarna, recoil starter pulleys . . . LG 934
Husqvarna, recoil starter springs. . . . LG 937
Husqvarna, snow thrower shear bolts . . . LG 852–853
Husqvarna, spindles . . . LG 870–876
Husqvarna, sprocket applications . . . FOR 190–193
Husqvarna, steering bushing . . . LG 941
Husqvarna, steering links . . . LG 939
Husqvarna, steering sector gear . . . LG 941
Husqvarna, steering shaft . . . LG 940
Husqvarna, steering shaft support . . . LG 939
Husqvarna, steering wheel adapter. . . . LG 939
Husqvarna, stop switches . . . LG 949
Husqvarna, trimmer & blower parts . . . LG 1020
Husqvarna, wheels . . . LG 1029–1046
Hustler, bearings . . . LG 236
Hustler, belts . . . LG 279
Hustler, blades . . . LG 470–475
Hustler, control cables . . . LG 708
Hustler, electric PTO clutches . . . LG 733–741
Hustler, idler pulleys . . . LG 827
Hustler, spindles . . . LG 884
Hydraulic Oil Filters . . . LG 819
Hydraulic Oil, SP anti wear. . . . SFS 84
Hydrometer, battery . . . LG 744
Hydrostatic Wheel Motors . . . LG 696


## I


Idler Pulleys. . . . LG 821–823
Idler Pulleys by Size, Chart . . . LG 821–823
Idler Pulleys, AMF . . . LG 824
Idler Pulleys, AYP. . . . LG 824–825
Idler Pulleys, Bobcat . . . LG 825–826
Idler Pulleys, Bunton . . . LG 826–827
Idler Pulleys, Cub Cadet . . . LG 826–827
Idler Pulleys, Dixie Chopper . . . LG 827
Idler Pulleys, Excel . . . LG 827
Idler Pulleys, Exmark . . . LG 827–828
Idler Pulleys, Grasshopper. . . . LG 828
Idler Pulleys, Hustler. . . . LG 827
Idler Pulleys, John Deere . . . LG 829–831
Idler Pulleys, MTD . . . LG 831–832
Idler Pulleys, Murray . . . LG 832–833
Idler Pulleys, OEM Replacement . . . LG 824–834
Idler Pulleys, Scag . . . LG 833
Idler Pulleys, Toro . . . LG 834
Idler Sprocket. . . . LG 725
Ignition Coils . . . LG 784–787
Ignition Coils, Briggs & Stratton. . . . LG 784–787
Ignition Coils, Honda . . . LG 784–787
Ignition Coils, Husqvarna . . . LG 784–787
Ignition Coils, Kohler . . . LG 784–787
Ignition Coils, Lawn-Boy. . . . LG 784–787
Ignition Coils, Robin . . . LG 784–787
Ignition Coils, Stihl . . . LG 784–787
Ignition Coils, Tecumseh . . . LG 784–787
Ignition Keys . . . LG 945–946
Ignition Module, universal . . . LG 789
**IGNITION PARTS . . . LG 784–790**
Ignition Switches . . . LG 942–945

Ignition Switches, Ariens . . . LG 942–945
Ignition Switches, AYP . . . LG 942–945
Ignition Switches, Cub Cadet . . . LG 942–945
Ignition Switches, Husqvarna . . . LG 942–945
Ignition Switches, John Deere . . . LG 942–945
Ignition Switches, Kohler . . . LG 942–945
Ignition Switches, MTD . . . LG 942–945
Ignition Switches, Murray . . . LG 942–945
Ignition Switches, Snapper . . . LG 942–945
**ILLUSTRATED PARTS LISTS . . . LG 40–175**
In-Line Fuel Filters, Bobcat . . . LG 774–776
In-Line Fuel Filters, Briggs & Stratton . . . LG 774–776
In-Line Fuel Filters, John Deere . . . LG 774–776
In-Line Fuel Filters, Kawasaki . . . LG 774–776
In-Line Fuel Filters, Kohler . . . LG 774–776
In-Line Fuel Filters, Kubota . . . LG 774–776
In-Line Fuel Filters, Scag . . . LG 774–776
In-Line Fuel Filters, Snapper . . . LG 774–776
In-Line Fuel Filters, Tecumseh . . . LG 774–776
In-Line Fuel Filters, Toro . . . LG 774–776
In-Tank Fuel Filters . . . LG 776–779
In-Tank Fuel Filters, assortment . . . SFS 103
Industrial Polyester Cord Belts . . . LG 336–337
Ingersoll, blades . . . LG 475
Inlet Needle Valves . . . LG 628–629
Inner Tubes . . . LG 956–957
Insulator, battery terminal . . . LG 743
Insulator, Honda carburetor . . . LG 601
Intake Gaskets, 2-cycle engines . . . LG 621
Intake Valves, Honda . . . LG 755
Integrated Log Cradle . . . OPE 46
Interlock Switches . . . LG 947–948
Inventory Essentials . . . SFS 21

## J

J-B Weld . . . SFS 97
Jacks . . . LG 796–798
Jacks, topwind . . . LG 796–798
Jacobsen, bearings . . . LG 226–237
Jacobsen, blades . . . LG 476–482
Jacobsen, edger blades . . . LG 585
Jacobsen, snow thrower scraper bars . . . LG 848
Jacobsen, snow thrower shear bolts . . . LG 852–853
John Deere, anti-scalp wheels/rollers . . . LG 1037–1042
John Deere, ball joints . . . LG 938–939
John Deere, bar & chain applications . . . FOR 47–49
John Deere, bearings . . . LG 237–238
John Deere, belts . . . LG 292–297
John Deere, blades . . . LG 482–493
John Deere, bushings . . . LG 237–238
John Deere, control cables . . . LG 709
John Deere, edger blades . . . LG 585
John Deere, electric PTO clutches . . . LG 733–741
John Deere, idler pulleys . . . LG 829–831
John Deere, ignition switches . . . LG 942–945
John Deere, in-line fuel filters . . . LG 774–776
John Deere, PTO switches . . . LG 946–947
John Deere, safety switches . . . LG 947–948
John Deere, semi-pneumatic flat-free wheel assemblies . . . LG 1044–1046
John Deere, snow thrower bearings . . . LG 854
John Deere, snow thrower bushings . . . LG 854
John Deere, snow thrower scraper bars . . . LG 847–848
John Deere, snow thrower shear bolts . . . LG 852–853
John Deere, snow thrower skids . . . LG 850
John Deere, spindles . . . LG 891–893
John Deere, sprocket applications . . . FOR 194
John Deere, voltage regulators . . . LG 731–732
John Deere, wheels . . . LG 1029–1046
Jonsered, bar & chain applications . . . FOR 50–55
Jonsered, recoil starter springs . . . LG 937
Jonsered, sprocket applications . . . FOR 194–195

## K

K&S Bearings . . . LG 238
K&S Bushings . . . LG 238
Kawasaki, air filters, foam . . . LG 201–203
Kawasaki, air filters, paper . . . LG 198–201
Kawasaki, edger blades . . . LG 585
Kawasaki, fuel caps . . . LG 772
Kawasaki, in-line fuel filters . . . LG 774–776
Kawasaki, oil filters . . . LG 814–819
Kawasaki, primer bulbs . . . LG 630
Kawasaki, recoil starter pulleys . . . LG 935
Kawasaki, recoil starter springs . . . LG 937
Kawasaki, recoil starters . . . LG 924
Kawasaki, starter motors . . . LG 917–918
Kawasaki, voltage regulators . . . LG 732
Kees, belts . . . LG 297
Kees, blades . . . LG 494–497
KEPS Nuts . . . SFS 105
Keys, flywheel . . . LG 790
Keys, ignition . . . LG 945–946
Keys, starter . . . LG 945–946
Kinetic, log splitter . . . OPE 44–45
King Kutter, belts . . . LG 298
King Kutter, blades . . . LG 497
King Kutter, semi-pneumatic flat-free wheel assemblies . . . LG 1044–1046
Kits, carburetor rebuild . . . LG 602–621
Knob, shift . . . LG 805
Knobs, handle . . . LG 802
Kobalt, bar & chain applications . . . FOR 55
Kohler, carburetor kits . . . LG 605
Kohler, electric starter gears . . . LG 928
Kohler, foam air filters . . . LG 206–207
Kohler, gasket . . . LG 757
Kohler, gasket set . . . LG 757
Kohler, ignition coils . . . LG 784–787
Kohler, ignition switches . . . LG 942–945
Kohler, in-line fuel filters . . . LG 774–776
Kohler, muffler . . . LG 808–809
Kohler, oil filters . . . LG 814–819
Kohler, paper air filters . . . LG 203–206
Kohler, points & condenser . . . LG 789
Kohler, recoil starter springs . . . LG 937
Kohler, starter motors . . . LG 918–919
Kohler, voltage regulators . . . LG 732
Komatsu, recoil starters . . . LG 924
Kubota, air filters . . . LG 208
Kubota, anti-scalp wheels/rollers . . . LG 1037–1042
Kubota, belts . . . LG 298–299
Kubota, blades . . . LG 497–501
Kubota, in-line fuel filters . . . LG 774–776
Kubota, PTO switches . . . LG 946–947
Kubota, safety switches . . . LG 947–948

## L

Land Pride, blades . . . LG 501–503
Lastec, blades . . . LG 503–504
Lawn Chief, spindles . . . LG 869
Lawn Mower, blade balancer . . . SFS 63
Lawn Mower, blade boxes . . . SFS 21
Lawn Mower, blade grinder accessories . . . SFS 62
Lawn Mower, blade grinder replacement parts . . . SFS 62
Lawn Mower, blade grinders . . . SFS 58–63
Lawn Mower, blade sharpeners . . . SFS 58–63
Lawn Mower, deck leveling tool . . . SFS 63
Lawn Mower, ramps . . . SFS 64
Lawn Mower, seats . . . LG 842–844
Lawn Mower, sulkies . . . SFS 77–78
Lawn-Boy, air filters . . . LG 209
Lawn-Boy, bearings . . . LG 238–239
Lawn-Boy, belts . . . LG 299
Lawn-Boy, blades . . . LG 505
Lawn-Boy, carburetor inlet needle valves . . . LG 629
Lawn-Boy, carburetor kits . . . LG 606
Lawn-Boy, edger blades . . . LG 585
Lawn-Boy, ignition coils . . . LG 784–787
Lawn-Boy, wheels . . . LG 1029–1046
Lead Battery Terminal . . . LG 743
Leather Boots, premium . . . SFS 113
Lesco, belts . . . LG 299
Lesco, blades . . . LG 505–508
Lesco, edger blades . . . LG 585
Lever, felling . . . SFS 18
Lift Arms . . . LG 794
Lifting Picks, logs . . . SFS 18
Lifting Tongs, logs . . . SFS 18

# 2019 Alphabetical Index – EN


Linch Pins . . . . . LG 803
Linch Pins Assortment . . . . . SFS 104
Line, fuel . . . . . LG 761–763
**LINKAGE, JACKS, & HARDWARE . . . . . LG 792–801**
Lithium Ion Battery Packs . . . . . OPE 10
Little Wonder, bearings . . . . . LG 239
Little Wonder, belts . . . . . LG 300
Little Wonder, edger blades . . . . . LG 585
LM300 Oregon® 40V MAX, lawn mower, Cordless Tool System . . . . . OPE 16
LM400 Oregon® 40V MAX, lawn mower, Cordless Tool System . . . . . OPE 17
Lock Straps, mower hoods . . . . . LG 803
Locking Pins . . . . . LG 795
Locking Pins, display pack . . . . . LG 800
Log Cradle . . . . . OPE 46
Log Lifting Picks . . . . . SFS 18
Log Lifting Tongs . . . . . SFS 18
Log Splitter Catcher . . . . . OPE 46
Log Splitter, 22-Ton . . . . . OPE 39
Log Splitter, 28-Ton . . . . . OPE 40
Log Splitter, 28-Ton Extend Split™ . . . . . OPE 41
Log Splitter, 35-Ton . . . . . OPE 42
Log Splitter, Kinetic . . . . . OPE 44–45
**LOG SPLITTERS . . . . . OPE 38–47**
Log Splitters, 4-way wedge . . . . . OPE 47
Loggers Filing Vise . . . . . SFS 14
Long Heads, Honda . . . . . LG 755
Lube, tire bead . . . . . SFS 68
Lubricant, gear, "0" . . . . . SFS 92
Lubricant, gear, "00" . . . . . SFS 92
Lubricant, gear, 80-90 wt . . . . . SFS 92
Lubricant, penetrant . . . . . SFS 93
Lubricants, Grease, Cleaners, Solvents & Glues . . . . . SFS 92–98
Lynch Pins . . . . . LG 794


## M


Machinery Bushings . . . . . SFS 106
Machinery Keys, display pack . . . . . LG 801
Magneto Coils . . . . . LG 784–787
Makita, bar & chain applications . . . . . FOR 56–59
Makita, sprocket applications . . . . . FOR 196
Manco Belts . . . . . LG 300
Marking Crayon Holder . . . . . SFS 19
Marking Crayons . . . . . SFS 19
Maruyama, air filters . . . . . LG 209
Maruyama, bar & chain applications . . . . . FOR 59
Maruyama, edger blades . . . . . LG 586
Maruyama, fuel caps . . . . . LG 772
Maruyama, trimmer & blower parts . . . . . LG 1020–1021
Masks, disposable respirator . . . . . SFS 120
Massey Fergunson, belts . . . . . LG 300
Massey Fergunson, blades . . . . . LG 508–511
Mastercraft, sprocket applications . . . . . FOR 196
McClane, belts . . . . . LG 300
McClane, control cables . . . . . LG 709
McCulloch, air filters . . . . . LG 209
McCulloch, edger blades . . . . . LG 586
McCulloch, sprocket applications . . . . . FOR 196–197
McCulloch, trimmer & blower parts . . . . . LG 1021
McCulloch,, bar & chain applications . . . . . FOR 60–62
McLane, bearings . . . . . LG 239
McLane, edger blades . . . . . LG 586
Melter, snow & ice . . . . . SFS 97
Meter, hour . . . . . LG 741
Metric Hex Cap Screws & Nuts Assortment . . . . . SFS 101
Mid-Mount Pole Saw . . . . . OPE 20
Mini Bike Throttle Accessories . . . . . LG 722
**MISCELLANEOUS PARTS . . . . . LG 802–805**
Mitsubishi Recoil Starter Pulleys . . . . . LG 935
Mitsubishi Recoil Starters . . . . . LG 924
Mitsubishi, air filters . . . . . LG 210
Mitten Grip Snow Thrower Starter Handle . . . . . LG 851
Modular Displays . . . . . SFS 4–6
Montgomery Ward, sprocket applications . . . . . FOR 197
Mower Deck Suspension Parts . . . . . LG 804
Mower Hood Lock Straps . . . . . LG 803
MTD, air filters . . . . . LG 210
MTD, anti-scalp wheels/rollers . . . . . LG 1037–1042
MTD, axles . . . . . LG 938
MTD, ball joints . . . . . LG 938–939
MTD, bearings . . . . . LG 239–242
MTD, belt guard . . . . . LG 802
MTD, belts . . . . . LG 300–306
MTD, blade adaptors . . . . . LG 340–341
MTD, blade brake . . . . . LG 802
MTD, blades . . . . . LG 512–521
MTD, bushings . . . . . LG 239–242
MTD, carburetor kits . . . . . LG 606
MTD, control cables . . . . . LG 710–715
MTD, drive discs . . . . . LG 726
MTD, drive pulleys . . . . . LG 837–838
MTD, edger blades . . . . . LG 586
MTD, electric PTO clutches . . . . . LG 733–741
MTD, fuel caps . . . . . LG 772
MTD, idler pulleys . . . . . LG 831–832
MTD, ignition switches . . . . . LG 942–945
MTD, mower hood lock straps . . . . . LG 803
MTD, primer bulbs . . . . . LG 630
MTD, PTO switches . . . . . LG 946–947
MTD, recoil starter pulleys . . . . . LG 935
MTD, recoil starters . . . . . LG 925
MTD, safety switches . . . . . LG 947–948
MTD, snow thrower 120V starters . . . . . LG 861
MTD, snow thrower auger assembly . . . . . LG 846
MTD, snow thrower bearings . . . . . LG 854–855
MTD, snow thrower bronze worm gear . . . . . LG 856
MTD, snow thrower bushings . . . . . LG 854–855
MTD, snow thrower carburetor kits . . . . . LG 859
MTD, snow thrower chute flange keeper . . . . . LG 855
MTD, snow thrower chute tilt cable guide . . . . . LG 856
MTD, snow thrower clutch lock cam . . . . . LG 856
MTD, snow thrower control cables . . . . . LG 856–859
MTD, snow thrower ignition key . . . . . LG 861
MTD, snow thrower lock plate . . . . . LG 856
MTD, snow thrower paddles . . . . . LG 846
MTD, snow thrower primer . . . . . LG 860
MTD, snow thrower recoil starters . . . . . LG 860–861
MTD, snow thrower shave plates . . . . . LG 848–849
MTD, snow thrower shear bolts . . . . . LG 852–853
MTD, snow thrower skids . . . . . LG 850
MTD, snow thrower steering control trigger . . . . . LG 856
MTD, snow thrower wheel . . . . . LG 856
MTD, spindles . . . . . LG 893–901
MTD, starter motors . . . . . LG 921
MTD, starter solenoids . . . . . LG 730
MTD, steering arm . . . . . LG 939
MTD, steering pinion gear . . . . . LG 941
MTD, steering shaft . . . . . LG 940
MTD, trimmer & blower parts . . . . . LG 1021–1022
MTD, wheels . . . . . LG 1029–1046
Muffler, Briggs & Stratton . . . . . LG 806–807
Muffler, Cub Cadet . . . . . LG 807
Muffler, Gravely . . . . . LG 807
Muffler, Honda . . . . . LG 807–808
Muffler, Kohler . . . . . LG 808–809
Muffler, Murray . . . . . LG 809
Muffler, Snapper . . . . . LG 809
Muffler, Tecumseh . . . . . LG 809–810
Muffler, Toro . . . . . LG 810
Muffler, Wheel Horse . . . . . LG 810
Muffler, Wisconsin . . . . . LG 810
**MUFFLERS . . . . . LG 806–810**
Murray, anti-scalp wheels/rollers . . . . . LG 1037–1042
Murray, ball joints . . . . . LG 938–939
Murray, bearings . . . . . LG 242–243
Murray, belts . . . . . LG 306–309
Murray, blade adaptors . . . . . LG 342
Murray, blades . . . . . LG 522–528
Murray, bushings . . . . . LG 242–243
Murray, control cables . . . . . LG 715–717
Murray, drag links . . . . . LG 939
Murray, drive pulleys . . . . . LG 838–839
Murray, idler pulleys . . . . . LG 832–833
Murray, ignition switches . . . . . LG 942–945
Murray, muffler . . . . . LG 809
Murray, snow thrower shear bolts . . . . . LG 852–853
Murray, snow thrower skids . . . . . LG 850
Murray, spindles . . . . . LG 902
Murray, steering gear kit . . . . . LG 941
Murray, steering links . . . . . LG 939
Murray, wheels . . . . . LG 1029–1046

## N


Needle Valves . . . LG 628–629
Neoprene Boot Liner . . . SFS 113
Nikki Carburetor Kits . . . LG 606
Noma, bearings . . . LG 243
Noma, belts . . . LG 309–310
Noma, bushings . . . LG 243
Noma, snow thrower shear bolts . . . LG 852–853
Noma, spindles . . . LG 869
Noma, wheels . . . LG 1029–1046
Nuts, chain saw bars . . . LG 686
Nuts, KEPS . . . SFS 105
Nuts, pal . . . SFS 105
Nuts, spindle . . . SFS 105
Nuts, spindles . . . LG 910


## O


O-Rings, assortment . . . SFS 102
OEM Replacement Drive Pulleys . . . LG 834–840
OEM Replacement Idler Pulleys . . . LG 824–834
Oil Caps, chain saws . . . LG 690
Oil Drain Pan . . . SFS 67
Oil Drain Valve . . . LG 760
Oil Extractor . . . SFS 67
Oil Filler Plug, Briggs & Stratton . . . LG 750
Oil Filler Plug, Honda . . . LG 756
**OIL FILTERS . . . LG 814–819**
Oil Filters, Briggs & Stratton . . . LG 814–819
Oil Filters, Generac . . . LG 814–819
Oil Filters, Honda . . . LG 814–819
Oil Filters, Kawasaki . . . LG 814–819
Oil Filters, Kohler . . . LG 814–819
Oil Filters, Tecumseh . . . LG 814–819
Oil Seal, Tecumseh . . . LG 759
Oil Seal, Troy-Bilt . . . LG 954
Oil Seals, Briggs & Stratton . . . LG 749
Oil Seals, Honda . . . LG 756
Oil Sensor Switches, Honda . . . LG 950
Oil, 2-cycle . . . SFS 82
Oil, air tool . . . SFS 83
Oil, chain saw bar & chain . . . SFS 19
Oil, Dri absorbant . . . SFS 68
Oil, hydraulic, SP anti-wear . . . SFS 84
Oil, Only One™ 2-cycle engine . . . SFS 19
Oil, synthetic 2-cycle, VP fuels . . . SFS 83
Oily Waste Safety Cans, polyethylene . . . SFS 88
Oleo-Mac, air filters . . . LG 210
Olympyk (Oleo-Mac), bar & chain applications . . . FOR 62–64
Olympyk (Oleo-Mac), sprocket applications . . . FOR 197
Onan, air filters . . . LG 211
Onan, starter motors . . . LG 921
Onan, voltage regulators . . . LG 732
Only One™ 2-Cycle Engine Oil . . . SFS 19
OPE, accessories . . . OPE 23
OPE, PowerSharp® chain . . . OPE 25
OPE, replacement parts . . . OPE 25
Oregon Log Splitters . . . OPE 38–47
Oregon, sprocket applications . . . FOR 197
Oregon® Bead Seater Tire Inflator . . . SFS 70
Oregon® Carburetor Floats . . . LG 624–625
Oregon® Carburetor Inlet Needle Valves . . . LG 629
Oregon® Carburetor Kits . . . LG 606–608
Oregon® Catalog . . . SFS 23
Oregon® Chain Saw Chain Cutter Displays . . . SFS 23
Oregon® Cordless Tool System, bar & chain applications . . . FOR 64
Oregon® Flat Files, chain saw chain . . . SFS 8
Oregon® Fuel Line . . . LG 761
Oregon® Magnum Ball Bearings . . . LG 224
Oregon® Round Files, chain saw chain . . . SFS 7–8
Oregon® Saw Chain Classification Chart . . . FOR 3
Oregon® Tire Changer . . . SFS 69
Oregon®, selecting products . . . FOR 4


## P


Paddles, snow throwers . . . LG 846–847
Pal Nuts . . . SFS 105
Pallets, spill . . . SFS 89
Partner, air filters . . . LG 211
Partner, bar & chain applications . . . FOR 65–66
Partner, belts . . . LG 310
Partner, sprocket applications . . . FOR 197–198
Parts Bin Boxes . . . SFS 21
Parts for Discontinued Grinners, Spinners, & Breakers . . . SFS 48–57
Penetrant, lubricant . . . SFS 93
Permatex Sealant . . . SFS 96
Permatex Thread locker . . . SFS 96
PH600 Power Head, Cordless Multi-Attachement . . . OPE 12
Pioneer, bar & chain applications . . . FOR 67–68
Pioneer, sprocket applications . . . FOR 198
Pipe, Honda muffler . . . LG 807–808
Piston Ring Compressor . . . SFS 66
Piston Rings, Briggs & Stratton . . . LG 750
Piston Rings, Honda . . . LG 754
Piston, Honda . . . LG 754
Plastic Cable Zip Ties . . . LG 723
Plastic Wire Bundlers . . . LG 723
Platforms, spill . . . SFS 89
Platinum Gatorline Trimmer Line . . . OPE 27
Pneumatic Wheel Assemblies . . . LG 1044–1046
Pocket Chain Saw Chain Breaker . . . SFS 47
Point of Purchase Display, 120v Professional Series™ . . . OPE 37
Point of Purchase Displays, Cordless Tool System . . . OPE 27–29
Point of Purchase Support Material . . . SFS 4–6, 21–23
Points & Condenser, Briggs & Stratton . . . LG 789
Points & Condenser, Kohler . . . LG 789
Points & Condenser, Tecumseh . . . LG 789
Polaris ATV Belts . . . LG 310
Pole Saw Kit with Battery Pack . . . OPE 20
Pole Saw Saw Chain . . . OPE 20
Pole Saw, PS250 Oregon® 40V MAX Cordless . . . OPE 20
Poly Ramp . . . SFS 89
Portable Light, WL275 Oregon® 40V MAX Cordless . . . OPE 22
Poulan / Poulan Pro, bar & chain applications . . . FOR 68–73
Poulan / Poulan Pro, sprocket applications . . . FOR 198–200
Poulan, air filters . . . LG 211–212
Poulan, blades . . . LG 529–533
Poulan, primer bulbs . . . LG 630
Poulan, pro belts . . . LG 311
Power Pruner / Echo Power Pruner, bar & chain applications . . . FOR 73–74
Power Spout, VP fuels . . . SFS 81
Power Trim, belts . . . LG 311
Power Trim, drive pulleys . . . LG 839
Power Trim, edger blades . . . LG 586
Powerhorse, bar & chain applications . . . FOR 74
PowerSharp® – Saw Chain Sharpening System . . . FOR 136–137
PowerSharp® Saw Chain for OPE . . . OPE 25
Premium Aramid Cord Belts . . . LG 334–335
Premium Leather Boots . . . SFS 113
Pressure Washer Pump Saver, non-aerosal . . . SFS 98
Primary Wire . . . LG 742
Primer Bulbs . . . LG 629–632
Primer Bulbs, chain saws . . . LG 690
Primers . . . LG 629–632
Professional Bar Mount Filing Guide, chain saw chain . . . SFS 11
Professional Maintenance Kit, chain saw chain . . . SFS 10
PS250 Guide Bar . . . OPE 25
PS250 Pole Saw . . . OPE 20
PS600 Pole Saw, Cordless Multi-Attachement . . . OPE 12
PTO Cables . . . LG 701–720
PTO Clutch . . . LG 733–741
PTO Switches . . . LG 946–947
Puller, flywheel . . . SFS 65
Puller, gear . . . SFS 65
**PULLEYS . . . LG 821–841**
Pulleys, drive . . . LG 834–840
Pulleys, idler . . . LG 824–834
Pulleys, recoil starters . . . LG 932–935
Pump Saver, pressure washer, non-aerosal . . . SFS 98
Pump, fuel . . . LG 767
Punch Set, roll pin . . . SFS 67
Push-Pull Control Cables . . . LG 720–721

# 2019 Alphabetical Index – EN

## Q


Quick Load Trimmer Head . . . . . OPE 26
Quill Shafts . . . . . LG 906–910
Quills, blade . . . . . LG 869–910


## R


R-Clip Pins . . . . . LG 795
Racks, commercial equipment . . . . . SFS 74–76
Rain Apparel . . . . . SFS 115
Rain Jacket . . . . . SFS 115
Rain Shell . . . . . SFS 115
Ramp, poly . . . . . SFS 89
Ramps, lawn mowers . . . . . SFS 64
Ransomes, semi-pneumatic flat-free wheel assemblies . . . . . LG 1044–1046
Rapid Battery Charger . . . . . OPE 10
Recoil Starter Handles . . . . . LG 929–930
Recoil Starter Parts . . . . . LG 929–930
Recoil Starter Pulleys . . . . . LG 932–935
Recoil Starter Pulleys, Briggs & Stratton . . . . . LG 933
Recoil Starter Pulleys, Echo . . . . . LG 933
Recoil Starter Pulleys, Green Machine . . . . . LG 936
Recoil Starter Pulleys, Homelite . . . . . LG 934
Recoil Starter Pulleys, Honda . . . . . LG 934
Recoil Starter Pulleys, Husqvarna . . . . . LG 934
Recoil Starter Pulleys, Kawasaki . . . . . LG 935
Recoil Starter Pulleys, Mitsubishi . . . . . LG 935
Recoil Starter Pulleys, MTD . . . . . LG 935
Recoil Starter Pulleys, Ryan . . . . . LG 934–935
Recoil Starter Pulleys, Snapper . . . . . LG 936
Recoil Starter Pulleys, Stihl . . . . . LG 936
Recoil Starter Pulleys, Tecumseh . . . . . LG 936
Recoil Starter Rope . . . . . LG 937
Recoil Starter Springs . . . . . LG 937
Recoil Starter Springs, Briggs & Stratton . . . . . LG 937
Recoil Starter Springs, Dolmar . . . . . LG 937
Recoil Starter Springs, Echo . . . . . LG 937
Recoil Starter Springs, Green Machine . . . . . LG 937
Recoil Starter Springs, Hoffco . . . . . LG 937
Recoil Starter Springs, Homelite . . . . . LG 937
Recoil Starter Springs, Honda . . . . . LG 937
Recoil Starter Springs, Husqvarna . . . . . LG 937
Recoil Starter Springs, Jonsered . . . . . LG 937
Recoil Starter Springs, Kawasaki . . . . . LG 937
Recoil Starter Springs, Kohler . . . . . LG 937
Recoil Starter Springs, RedMax . . . . . LG 937
Recoil Starter Springs, Robin . . . . . LG 937
Recoil Starter Springs, Shindaiwa . . . . . LG 937
Recoil Starter Springs, Stihl . . . . . LG 937
Recoil Starters . . . . . LG 922–925
Recoil Starters, Briggs & Stratton . . . . . LG 923
Recoil Starters, Honda . . . . . LG 922–923
Recoil Starters, Kawasaki . . . . . LG 924
Recoil Starters, Komatsu . . . . . LG 924
Recoil Starters, Mitsubishi . . . . . LG 924
Recoil Starters, MTD . . . . . LG 925
Recoil Starters, Robin . . . . . LG 925
Recoil Starters, Tecumseh . . . . . LG 922–925
Red Hawk, blades . . . . . LG 534–535
RedMax, air filters . . . . . LG 212
RedMax, bar & chain applications . . . . . FOR 74–76
RedMax, edger blades . . . . . LG 587
RedMax, recoil starter springs . . . . . LG 937
RedMax, sprocket applications . . . . . FOR 200
RedMax, trimmer & blower parts . . . . . LG 1022
Refacer, valves . . . . . SFS 67
Regulators, voltage . . . . . LG 731–732
Relay Switches . . . . . LG 729
Remington, bar & chain applications . . . . . FOR 77–78
Remington, sprocket applications . . . . . FOR 200
Repair Kits, tubeless tires . . . . . SFS 69
Replacement Battery Packs . . . . . OPE 10
Replacement File, chain saw bar & rail dresser tool . . . . . SFS 13
Replacement Guide Bars for OPE . . . . . OPE 25
Replacement Parts for Discontinued Grinners, & Breakers . . . . . SFS 48–57
Replacement Parts, lawn mower blade grinders . . . . . SFS 62
Replacement PowerSharp® Chain for OPE . . . . . OPE 25
Replacement Trimmer Head ST275 . . . . . OPE 26
Respirator Masks, disposable . . . . . SFS 120
Riding Mower Cover . . . . . LG 803
Ring Compressor . . . . . SFS 66
Rings, Briggs & Stratton . . . . . LG 750
Rings, Honda . . . . . LG 754
Rivet Spinner, chain saw chain, heavy duty . . . . . SFS 46
Rivet Spinner, compact electric . . . . . SFS 42
Robin, carburetors . . . . . LG 596
Robin, ignition coils . . . . . LG 784–787
Robin, recoil starter springs . . . . . LG 937
Robin, recoil starters . . . . . LG 925
Rod End Bearings . . . . . LG 804
Rods, Briggs & Stratton . . . . . LG 750
Rods, Honda . . . . . LG 755
Roll Pin Punch Set . . . . . SFS 68
Roll Pins Assortment . . . . . SFS 102
Roller Chain . . . . . LG 676
Roller Chain, connecting links . . . . . LG 676
Roller Chain, half links . . . . . LG 676
Roller Chain, offset links . . . . . LG 676
Rope, starter . . . . . LG 937
Roper, bearings . . . . . LG 227–228
Roper, belts . . . . . LG 311–312
Roper, bushings . . . . . LG 227–228
Roper, spindles . . . . . LG 903–904
Rubber Forestry Boots . . . . . SFS 113
Ryan, recoil starter pulleys . . . . . LG 934–935
Ryan, trimmer & blower parts . . . . . LG 1022–1023
Ryobi, bar & chain applications . . . . . FOR 78–79
Ryobi, edger blades . . . . . LG 587
Ryobi, trimmer & blower parts . . . . . LG 1022–1023


## S


Safety Cans, oily waste, polyethylene . . . . . SFS 88
**SAFETY EQUIPMENT . . . . . SFS 108–121**
Safety Eyewear . . . . . SFS 117–119
Safety Eyewear, display rack . . . . . SFS 20
Safety Glasses . . . . . SFS 117–119
Safety Goggles . . . . . SFS 117–119
Safety Helmet . . . . . SFS 112
Safety Switches . . . . . LG 947–948
Safety Visor . . . . . SFS 120
Safety, ANSI information chain saw . . . . . FOR 2–3
**SAW CHAIN . . . . . FOR 103–147**
Saw Chain for PS250 Cordless Pole Saw . . . . . OPE 25
Saw Chain, automatic chain grinders . . . . . SFS 32–40
Saw Chain, features . . . . . FOR 108–109
Scag, anti-scalp wheels/rollers . . . . . LG 1037–1042
Scag, ball joints . . . . . LG 938–939
Scag, bearings . . . . . LG 244
Scag, belts . . . . . LG 312–314
Scag, blades . . . . . LG 535–537
Scag, brake band . . . . . LG 698
Scag, bushings . . . . . LG 244
Scag, control cables . . . . . LG 717–718
Scag, drive pulleys . . . . . LG 839–840
Scag, fuel caps . . . . . LG 772
Scag, fuel tank strap . . . . . LG 698
Scag, idler pulleys . . . . . LG 833
Scag, in-line fuel filters . . . . . LG 774–776
Scag, pneumatic wheel assemblies . . . . . LG 1044–1046
Scag, PTO switches . . . . . LG 946–947
Scag, safety switches . . . . . LG 947–948
Scag, semi-pneumatic flat-free wheel assemblies . . . . . LG 1044–1046
Scag, spindles . . . . . LG 903
Scale, chain saw chain . . . . . SFS 47
Scalping Blades . . . . . LG 368
Scotts, belts . . . . . LG 315
Scotts, blades . . . . . LG 537–539
Scraper Bars, snow throwers . . . . . LG 847–849
Scraper, gasket . . . . . LG 760
Screnches . . . . . SFS 19
Sea Foam Engine Treatment . . . . . SFS 81
Seal, Troy-Bilt . . . . . LG 954
Sealant, Permatex . . . . . SFS 95
Seals, Briggs & Stratton . . . . . LG 749
Seals, Honda . . . . . LG 756
Seals, Spindles . . . . . LG 910
Sears / Craftsman, bar & chain applications . . . . . FOR 23–25

Sears / Craftsman, bearings . . . LG 227–228
Sears / Craftsman, belts . . . LG 315
Sears / Craftsman, blade adaptors . . . LG 342
Sears / Craftsman, bushings . . . LG 227–228
Sears / Craftsman, edger blades . . . LG 587
Sears / Craftsman, spindles . . . LG 903–904
Sears / Craftsman, sprocket applications . . . FOR 200
Sears / Craftsman, wheels . . . LG 1029–1046
**SEATS . . . LG 842–844**
Sediment bowl . . . LG 765
Self Propelled Control Cables . . . LG 701–720
Self-Tapping Bolts . . . SFS 105
Semi-Pneumatic Flat-Free Wheel Assemblies . . . LG 1044–1046
Semi-Pneumatic Wheels, AMF . . . LG 1029–1037
Semi-Pneumatic Wheels, AYP . . . LG 1029–1037
Semi-Pneumatic Wheels, Bobcat . . . LG 1029–1037
Semi-Pneumatic Wheels, Bunton . . . LG 1029–1037
Semi-Pneumatic Wheels, Honda . . . LG 1029–1037
Semi-Pneumatic Wheels, Husqvarna . . . LG 1029–1037
Semi-Pneumatic Wheels, John Deere . . . LG 1029–1037
Semi-Pneumatic Wheels, Lawn-Boy . . . LG 1029–1037
Semi-Pneumatic Wheels, MTD . . . LG 1029–1037
Semi-Pneumatic Wheels, Murray . . . LG 1029–1037
Semi-Pneumatic Wheels, Noma . . . LG 1029–1037
Semi-Pneumatic Wheels, Sears . . . LG 1029–1037
Semi-Pneumatic Wheels, Sensation . . . LG 1029–1037
Semi-Pneumatic Wheels, Snapper . . . LG 1029–1037
Semi-Pneumatic Wheels, Toro . . . LG 1029–1037
Sensation Wheels . . . LG 1029–1046
Service Tickets . . . SFS 21
Shaft Collars, display pack . . . LG 801
Shaft, steering . . . LG 940
Shafts, quills . . . LG 906–910
Shafts, spindles . . . LG 906–910
Sharpeners, lawn mower blades . . . SFS 58–63
Sharpening Stones, hand held chain saw chain sharpeners . . . SFS 12
Shave Plates, snow throwers . . . LG 847–849
Shear Bolts, snow throwers . . . LG 852–853
Shear Pins, flywheel . . . LG 790
Shift Knob . . . LG 805
Shindaiwa, air filters . . . LG 212–213
Shindaiwa, bar & chain applications . . . FOR 79–83
Shindaiwa, edger blades . . . LG 587
Shindaiwa, fuel caps . . . LG 772
Shindaiwa, recoil starter springs . . . LG 937
Shindaiwa, trimmer & blower parts . . . LG 1023–1024
Shop Packs, air filters . . . LG 178
**SHOP RETAIL . . . SFS 4–23**
**SHOP TOOLS . . . SFS 24–71**
Shorting Clip, spark plug . . . LG 867
Shoulder Bolts . . . SFS 104–105
Shoulder Bolts, assortment . . . SFS 104–105
Shut-Off Valves, fuel line . . . LG 766–767
Shut-Offs, fuel line . . . LG 766–767
Simplicity, bearings . . . LG 244–245
Simplicity, belts . . . LG 316
Simplicity, blades . . . LG 539–545
Simplicity, bushings . . . LG 244–245
Simplicity, electric PTO clutches . . . LG 733–741
Simplicity, snow thrower scraper bars . . . LG 849
Single Use Grease Gun . . . SFS 12–13
Siphon Pump, VP fuels . . . SFS 81
Skids, snow throwers . . . LG 849–851
Skil, bar & chain applications . . . FOR 83
Skil, sprocket applications . . . FOR 201
Slime® Tire Sealant . . . SFS 98
Snap Rings, assortment . . . SFS 103
Snapper, ball joints . . . LG 938–939
Snapper, bar & chain applications . . . FOR 84
Snapper, bearings . . . LG 245–246
Snapper, belts . . . LG 316–319
Snapper, blade adaptors . . . LG 342
Snapper, blades . . . LG 545–556
Snapper, brake band . . . LG 698
Snapper, bushings . . . LG 245–246
Snapper, control cables . . . LG 718–719
Snapper, drive discs . . . LG 727
Snapper, drive pulleys . . . LG 840
Snapper, electric PTO clutches . . . LG 733–741
Snapper, ignition switches . . . LG 942–945
Snapper, in-line fuel filters . . . LG 774–776
Snapper, muffler . . . LG 809
Snapper, on/off switches . . . LG 950
Snapper, pneumatic wheel assemblies . . . LG 1044–1046
Snapper, PTO switches . . . LG 946–947
Snapper, recoil starter pulleys . . . LG 936
Snapper, safety switches . . . LG 947–948
Snapper, seal boot . . . LG 805
Snapper, snow thrower paddles . . . LG 849
Snapper, snow thrower scraper bars . . . LG 849
Snapper, snow thrower shear bolts . . . LG 852–853
Snapper, snow thrower skids . . . LG 850
Snapper, sprocket applications . . . FOR 201
Snapper, stop switches . . . LG 949
Snapper, trimmer & blower parts . . . LG 1024
Snapper, wheels . . . LG 1029–1046
Snow & Ice Melter . . . SFS 97
**SNOW THROWER PARTS . . . LG 846–863**
Snow Thrower, 120V starters, Cub Cadet . . . LG 861
Snow Thrower, 120V starters, MTD . . . LG 861
Snow Thrower, 120V starters, Tecumseh . . . LG 861
Snow Thrower, auger assembly, MTD . . . LG 846
Snow Thrower, auger control cables . . . LG 701–720
Snow Thrower, bearings . . . LG 853–855
Snow Thrower, bearings, Ariens . . . LG 853–854
Snow Thrower, bearings, Cub Cadet . . . LG 854–855
Snow Thrower, bearings, John Deere . . . LG 854
Snow Thrower, bearings, MTD . . . LG 854–855
Snow Thrower, belts . . . LG 862–863
Snow Thrower, bronze worm gear, Cub Cadet . . . LG 856
Snow Thrower, bronze worm gear, MTD . . . LG 856
Snow Thrower, bushings, Ariens . . . LG 853–854
Snow Thrower, bushings, Cub Cadet . . . LG 854–855
Snow Thrower, bushings, John Deere . . . LG 854
Snow Thrower, bushings, MTD . . . LG 854–855
Snow Thrower, carburetor kits, Cub Cadet . . . LG 859
Snow Thrower, carburetor kits, MTD . . . LG 859
Snow Thrower, chute control cables . . . LG 701–720
Snow Thrower, chute flange keeper, Cub Cadet . . . LG 855
Snow Thrower, chute flange keeper, MTD . . . LG 855
Snow Thrower, chute tilt cable guide, Cub Cadet . . . LG 856
Snow Thrower, chute tilt cable guide, MTD . . . LG 856
Snow Thrower, clutch lock cam, Cub Cadet . . . LG 856
Snow Thrower, clutch lock cam, MTD . . . LG 856
Snow Thrower, control cables, Cub Cadet . . . LG 856–859
Snow Thrower, control cables, MTD . . . LG 856–859
Snow Thrower, drive disc . . . LG 851
Snow Thrower, ignition key, Cub Cadet . . . LG 861
Snow Thrower, ignition key, Tecumseh . . . LG 861
Snow Thrower, lock plate, Cub Cadet . . . LG 856
Snow Thrower, lock plate, MTD . . . LG 856
Snow Thrower, paddles . . . LG 846–847
Snow Thrower, paddles, Honda . . . LG 846
Snow Thrower, paddles, MTD . . . LG 846
Snow Thrower, paddles, Snapper . . . LG 847
Snow Thrower, paddles, Toro . . . LG 847
Snow Thrower, primer, Cub Cadet . . . LG 860
Snow Thrower, primer, MTD . . . LG 860
Snow Thrower, recoil starters, Cub Cadet . . . LG 860–861
Snow Thrower, recoil starters, MTD . . . LG 860–861
Snow Thrower, scraper bars . . . LG 847–849
Snow Thrower, scraper bars, Ariens . . . LG 847
Snow Thrower, scraper bars, Honda . . . LG 847
Snow Thrower, scraper bars, Jacobsen . . . LG 848
Snow Thrower, scraper bars, John Deere . . . LG 847–848
Snow Thrower, scraper bars, Simplicity . . . LG 849
Snow Thrower, scraper bars, Snapper . . . LG 849
Snow Thrower, scraper bars, Toro . . . LG 849
Snow Thrower, shave plates . . . LG 847–849
Snow Thrower, shave plates, Cub Cadet . . . LG 848
Snow Thrower, shave plates, MTD . . . LG 848–849
Snow Thrower, shear bolts . . . LG 852–853
Snow Thrower, shear bolts, Ariens . . . LG 852–853
Snow Thrower, shear bolts, Honda . . . LG 852–853
Snow Thrower, shear bolts, Husqvarna . . . LG 852–853
Snow Thrower, shear bolts, Jacobsen . . . LG 852–853
Snow Thrower, shear bolts, John Deere . . . LG 852–853
Snow Thrower, shear bolts, MTD . . . LG 852–853
Snow Thrower, shear bolts, Murray . . . LG 852–853
Snow Thrower, shear bolts, Noma . . . LG 852–853
Snow Thrower, shear bolts, Snapper . . . LG 852–853
Snow Thrower, shear bolts, Universal . . . LG 852–853
Snow Thrower, skids . . . LG 849–851
Snow Thrower, skids, Ariens . . . LG 850

# 2019 Alphabetical Index – EN


Snow Thrower, skids, Ariens . . . LG 850
Snow Thrower, skids, AYP . . . LG 850
Snow Thrower, skids, Honda . . . LG 850
Snow Thrower, skids, John Deere . . . LG 850
Snow Thrower, skids, MTD . . . LG 850
Snow Thrower, skids, Murray . . . LG 850
Snow Thrower, skids, Snapper . . . LG 850
Snow Thrower, skids, Toro . . . LG 851
Snow Thrower, skids, Universal . . . LG 849
Snow Thrower, starter handle, mitten grip . . . LG 851
Snow Thrower, starter key, MTD . . . LG 861
Snow Thrower, steering control cables . . . LG 701–720
Snow Thrower, steering control trigger, Cub Cadet . . . LG 856
Snow Thrower, steering control trigger, MTD . . . LG 856
Snow Thrower, vane, Toro . . . LG 851
Snow Thrower, wheel, Cub Cadet . . . LG 856
Snow Thrower, wheel, MTD . . . LG 856
Socket Set Screws Assortment . . . SFS 101
Solenoids . . . LG 729–730
Solo, bar & chain applications . . . FOR 84–87
Solo, sprocket applications . . . FOR 201
Solvent, cleaning . . . SFS 94
Spacers, spindles . . . LG 910
Spark Plug Boots . . . LG 787–788
Spark Plug Shorting Clip . . . LG 867
Spark Plug Terminals . . . LG 787–788
**SPARK PLUGS . . . LG 864–867**
Spark Tester . . . SFS 65
Spartan, blades . . . LG 557
Spill Pallets . . . SFS 89
Spill Platforms . . . SFS 89
Spindle Bolts . . . LG 910
Spindle Nuts . . . SFS 105
Spindle Seals . . . LG 910
Spindle Shafts . . . LG 906–910
Spindle Spacers . . . LG 910
**SPINDLES . . . LG 869–910**
Spindles, AMF . . . LG 869
Spindles, Ariens . . . LG 869
Spindles, AYP . . . LG 870–876
Spindles, Blade . . . LG 869–910
Spindles, Bobcat . . . LG 874–875
Spindles, Bunton . . . LG 874–875
Spindles, Bush Hog . . . LG 876–877
Spindles, Caroni . . . LG 877
Spindles, Cub Cadet . . . LG 878–883
Spindles, Dixie Chopper . . . LG 883
Spindles, Dixon . . . LG 883–884
Spindles, Excel . . . LG 884
Spindles, Exmark . . . LG 884–889
Spindles, Ferris . . . LG 889
Spindles, Gilson . . . LG 891
Spindles, Grasshopper . . . LG 890
Spindles, Gravely . . . LG 890–891
Spindles, Great Dane . . . LG 891
Spindles, Husqvarna . . . LG 870–876
Spindles, Hustler . . . LG 884
Spindles, John Deere . . . LG 891–893
Spindles, Lawn Chief . . . LG 869
Spindles, MTD . . . LG 893–901
Spindles, Murray . . . LG 902
Spindles, Noma . . . LG 869
Spindles, Roper . . . LG 903–904
Spindles, Scag . . . LG 903
Spindles, Sears . . . LG 903–904
Spindles, Toro . . . LG 905
Spindles, Wright Stander . . . LG 905
Splitters . . . OPE 38–47
Spray Carburetor Cleaner . . . SFS 93
Spray Starting Fluid . . . SFS 93–94
Spray, battery terminal cleaner . . . SFS 95
Spray, battery terminal protector . . . SFS 95
Spray, brake cleaner . . . SFS 94
**SPRAYERS . . . LG 911–912**
Spring Pins, assortment . . . SFS 102
Spring Pins, display pack . . . LG 801
**SPRINGS . . . LG 913–914**
Springs, recoil starters . . . LG 937
Sprocket, idler . . . LG 725
Sprocket, steel plate . . . LG 725
**SPROCKETS – CHAIN SAW . . . FOR 180–210**
ST120VX String Trimmer, 120v Professional Series™ . . . OPE 33
ST275 Trimmer Head . . . OPE 26
ST275 Trimmer/Edger . . . OPE 19
ST600 String Trimmer, Cordless Multi-Attachment . . . OPE 13
Stabilizer Arms . . . LG 793
Stabilizer, fuel . . . SFS 85
Stand, chain saw chain grinder . . . SFS 41
Stanley Hydraulic, bar & chain applications . . . FOR 87
**STARTER PARTS . . . LG 926–936**
**STARTER ROPE . . . LG 937**
Starter, center screws, Honda . . . LG 929
Starter, clutch, Briggs & Stratton . . . LG 929
Starter, cups, Honda . . . LG 929
Starter, dogs . . . LG 930–931
Starter, drives, electric starters . . . LG 926–928
Starter, handle, Briggs & Stratton . . . LG 929–930
Starter, handle, Honda . . . LG 930
Starter, handle, mitten grip snow thrower . . . LG 851
Starter, handle, Stihl . . . LG 931
Starter, handle, Tecumseh . . . LG 931
Starter, handles . . . LG 929–930
Starter, keys . . . LG 945–946
Starter, motors . . . LG 915–921
Starter, motors, Briggs & Stratton . . . LG 915–916
Starter, motors, Honda . . . LG 918
Starter, motors, Kawasaki . . . LG 917–918
Starter, motors, Kohler . . . LG 918–919
Starter, motors, MTD . . . LG 921
Starter, motors, Onan . . . LG 921
Starter, motors, Tecumseh . . . LG 922
Starter, pawl repair kits . . . LG 932
Starter, pawl retainers . . . LG 932
Starter, pawls & springs . . . LG 930–931
Starter, pawls & springs, Briggs & Stratton . . . LG 930–931
Starter, pawls & springs, Echo . . . LG 930–931
Starter, pawls & springs, Honda . . . LG 930–931
Starter, pawls & springs, Stihl . . . LG 930–931
Starter, pulleys, chain saws . . . LG 692
Starter, solenoids . . . LG 729–730
Starter, springs, chain saws . . . LG 693
Starter, switches . . . LG 942–945
**STARTERS . . . LG 915–925**
Starters, electric . . . LG 915–921
Starters, recoil . . . LG 922–925
Starting Fluid Spray . . . SFS 93–94
Steel Plate Sprockets . . . LG 725
Steering Arm, MTD . . . LG 939
Steering Gear Kit, Murray . . . LG 941
Steering Links . . . LG 939
**STEERING PARTS . . . LG 938–941**
Steering Pinion Gear, MTD . . . LG 941
Steering Sector Gear, AYP . . . LG 941
Steering Sector Gear, Husqvarna . . . LG 941
Steering Shaft . . . LG 940
Steering Shaft Support, AYP . . . LG 939
Steering Shaft Support, Husqvqrna . . . LG 939
Steering Shaft, AYP . . . LG 940
Steering Shaft, Husqvarna . . . LG 940
Steering Shaft, MTD . . . LG 940
Steering Wheel Adapter, AYP . . . LG 939–940
Steering Wheel Adapter, Husqvqrna . . . LG 939–940
Steiner, blades . . . LG 557–558
Stick Tool Cable, 120v Professional Series™ . . . OPE 36
Stihl, air filters . . . LG 213–216
Stihl, bar & chain applications . . . FOR 88–92
Stihl, belts . . . LG 320
Stihl, edger blades . . . LG 587
Stihl, fuel caps . . . LG 773
Stihl, ignition coils . . . LG 784–787
Stihl, recoil starter pulleys . . . LG 936
Stihl, recoil starter springs . . . LG 937
Stihl, sprocket applications . . . FOR 201–203
Stihl, starter handle . . . LG 931
Stihl, starter pawls & springs . . . LG 930–931
Stihl, trimmer & blower parts . . . LG 1024–1026
Stone Grinders, lawn mower blades . . . SFS 59–61
Stop Switches . . . LG 949
Storage Cabinets, flammable liquids . . . SFS 89–90
Straight Key, stock . . . LG 727
String Trimmer . . . OPE 19
Sulkies, lawn mower . . . SFS 77–78
Sun Joe, bar & chain applications . . . FOR 92–93
SuperTwist Magnum Gatorline™ for ST275 . . . OPE 27

Sutech, blades . . . LG 559
Swab, bead lube . . . SFS 68
Swisher, blades . . . LG 559
Swisher, semi, pneumatic flat-free wheel assemblies . . . LG 1044–1046
**SWITCHES . . . LG 942–950**
Switches, ignition . . . LG 942–945
Switches, interlock . . . LG 947–948
Switches, on/off . . . LG 949
Switches, PTO . . . LG 946–947
Switches, safety . . . LG 947–948
Switches, starter . . . LG 942–945
Switches, stop . . . LG 949
Synthetic 2-Cycle Oil, VP fuels . . . SFS 83

## T

T-Handle Allen Wrench Set . . . SFS 66
Tachometer, wireless . . . SFS 67
Tanaka, bar & chain applications . . . FOR 93–95
Tanaka, edger blades . . . LG 588
Tanaka, fuel caps . . . LG 773
Tanaka, sprocket applications . . . FOR 203
Tanaka, trimmer & blower parts . . . LG 1026
Tanks, fuel . . . LG 770
Tapered Roller Bearings . . . LG 223
Tecumseh, air filters, foam . . . LG 219
Tecumseh, air filters, paper . . . LG 216–218
Tecumseh, carburetor diaphragms . . . LG 623
Tecumseh, carburetor float bowls . . . LG 625
Tecumseh, carburetor floats . . . LG 625
Tecumseh, carburetor inlet needle valves . . . LG 629
Tecumseh, carburetor kits . . . LG 608–609
Tecumseh, carburetor reference chart . . . LG 594–595
Tecumseh, carburetors . . . LG 598–601
Tecumseh, electric starter gears . . . LG 929
Tecumseh, gasket . . . LG 758–759
Tecumseh, gasket set . . . LG 758
Tecumseh, ignition coils . . . LG 784–787
Tecumseh, in-line fuel filters . . . LG 774–776
Tecumseh, muffler . . . LG 809–810
Tecumseh, oil filters . . . LG 814–819
Tecumseh, oil seal . . . LG 759
Tecumseh, points & condenser . . . LG 789
Tecumseh, primer bulbs . . . LG 630
Tecumseh, recoil starter pulleys . . . LG 936
Tecumseh, recoil starters . . . LG 922–925
Tecumseh, snow thrower 120V starters . . . LG 861
Tecumseh, snow thrower ignition key . . . LG 861
Tecumseh, starter handle . . . LG 931
Tecumseh, starter motors . . . LG 922
Tender, battery . . . LG 743
Tester, compression . . . SFS 65
Tester, spark . . . SFS 65
Thread locker, Permatex . . . SFS 96
Throttle Accessories, assortment . . . SFS 101
Throttle Cable Clips . . . LG 722
Throttle Cable Conduit Button . . . LG 721
Throttle Cable Inner Wire, roll . . . LG 721
Throttle Cable Outer Conduit, roll . . . LG 721
Throttle Cable Wire Bending Tool . . . LG 722
Throttle Cables . . . LG 701–720
Throttle Wire Swivel Stops . . . LG 722
Throttle Wire Z-Bender Tool . . . SFS 66
Tickets, service . . . SFS 21
Tie Rod Ends . . . LG 938–939
**TILLER PARTS . . . LG 954**
Tiller Tine Pins, assortment . . . SFS 102
Tiller Tines, Troy-Bilt . . . LG 954
Tillotson, carburetor . . . LG 595
Tillotson, carburetor inlet needle valves . . . LG 629
Tillotson, carburetor kits . . . LG 609–610
Tines, tiller . . . LG 954
Tire Chains . . . LG 965
Tire Changer . . . SFS 69
Tire Inflator, aerosol with hose . . . SFS 94
Tire Sealant, Slime® . . . SFS 98
Tire Tools . . . SFS 69
Tire Tubes . . . LG 956–957
Tires, agricultural lug tread . . . LG 958
Tires, All Trail II tread . . . LG 964
Tires, AT100 tread . . . LG 958
Tires, AT489 tread . . . LG 964
Tires, ATV knobby tread . . . LG 963
Tires, bar tread . . . LG 958
Tires, chevron bar tread . . . LG 958
Tires, chevron tread . . . LG 959
Tires, golf rib tread . . . LG 959
Tires, golf tread . . . LG 963
Tires, high speed trailer . . . LG 960
Tires, links golf cart tread . . . LG 963
Tires, magnum tread . . . LG 962
Tires, Polar Trac tread . . . LG 958
Tires, Power Trac tread . . . LG 958
Tires, saw tooth tread . . . LG 961
Tires, Scorpion tread . . . LG 963
Tires, smooth tread . . . LG 960
Tires, Snow Hog tread . . . LG 958
Tires, snow thrower tread . . . LG 958
Tires, solid foam flat-free . . . LG 964
Tires, straight rib tread . . . LG 960
Tires, stud tread . . . LG 957
Tires, Super Lug tread . . . LG 958
Tires, Super Turf tread . . . LG 962
Tires, Tital tread . . . LG 958
Tires, Tru Power tread . . . LG 958
**TIRES, TUBES, & TIRE CHAINS . . . LG 955–965**
Tires, Turf CTR tread . . . LG 963
Tires, Turf Master tread . . . LG 961
Tires, Turf Mate tread . . . LG 963
Tires, Turf Saver II tread . . . LG 960
Tires, Turf Saver tread . . . LG 959
Tires, Turf Smart tread . . . LG 962
Tires, turf tread . . . LG 959
Tires, wheelbarrow rib . . . LG 957
Tires, wrap . . . LG 964
Tires, X-Trac tread . . . LG 958
TK Carburetor Kits . . . LG 608
Tool Bag . . . OPE 23
Tools, shop . . . SFS 24–71
Top Link Pins . . . LG 794
Top Links . . . LG 794
Toro, air filters . . . LG 219–220
Toro, anti-scalp wheels/rollers . . . LG 1037–1042
Toro, bar & chain applications . . . FOR 95
Toro, bearings . . . LG 247
Toro, belts . . . LG 320–323
Toro, blades . . . LG 560–573
Toro, control cables . . . LG 719–720
Toro, electric PTO clutches . . . LG 733–741
Toro, fuel caps . . . LG 773
Toro, handle latch . . . LG 802
Toro, idler pulleys . . . LG 834
Toro, in-line fuel filters . . . LG 774–776
Toro, muffler . . . LG 810
Toro, on/off switches . . . LG 949
Toro, pneumatic wheel assemblies . . . LG 1044–1046
Toro, PTO switches . . . LG 946–947
Toro, safety switches . . . LG 947–948
Toro, semi-pneumatic flat-free wheel assemblies . . . LG 1044–1046
Toro, snow thrower paddles . . . LG 847
Toro, snow thrower scraper bars . . . LG 849
Toro, snow thrower skids . . . LG 851
Toro, snow thrower vane . . . LG 851
Toro, spindles . . . LG 905
Toro, stop switches . . . LG 949
Toro, wheels . . . LG 1029–1046
Torque Converter Parts . . . LG 675
Torsion Springs, assortment . . . SFS 104
Training Tools, chain saw chain . . . SFS 23
Treatments, engine . . . SFS 81
**TRIMMER & BLOWER PARTS . . . LG 1016–1027**
Trimmer & Blower Parts, Echo . . . LG 1016–1018
Trimmer & Blower Parts, Homelite . . . LG 1019
Trimmer & Blower Parts, Husqvarna . . . LG 1020
Trimmer & Blower Parts, Maruyama . . . LG 1020–1021
Trimmer & Blower Parts, McCulloch . . . LG 1021
Trimmer & Blower Parts, MTD . . . LG 1021–1022
Trimmer & Blower Parts, RedMax . . . LG 1022
Trimmer & Blower Parts, Ryan . . . LG 1022–1023
Trimmer & Blower Parts, Ryobi . . . LG 1022–1023
Trimmer & Blower Parts, Shindaiwa . . . LG 1023–1024
Trimmer & Blower Parts, Snapper . . . LG 1024

# 2019 Alphabetical Index – EN


Trimmer & Blower Parts, Stihl. . . . . LG 1024–1026
Trimmer & Blower Parts, Tanaka . . . . . LG 1026
Trimmer & Blower Parts, Weed Eater. . . . . LG 1027
Trimmer Edger Kit with Battery Pack . . . . . OPE 19
Trimmer Harness, universal . . . . . LG 1027
Trimmer Head for OPE . . . . . OPE 26
Trimmer Heads, 4" Heavy Duty Magnum Gatorhead™ . . . . . LG 989
Trimmer Heads, 6" Heavy Duty Magnum Gatorhead™ . . . . . LG 990
Trimmer Heads, application chart. . . . . LG 997–1013
Trimmer Heads, bump & feed . . . . . LG 985–994
Trimmer Heads, fixed line trimmer head . . . . . LG 996
Trimmer Heads, Gator® SpeedLoad™ . . . . . LG 968–978
Trimmer Heads, Jet Fit™ heads . . . . . LG 995
Trimmer Heads, Kwik Loader™ Jet-Fit Express head. . . . . LG 995
Trimmer Heads, Lightning Load™ trimmer head . . . . . LG 985
Trimmer Heads, manual feed . . . . . LG 995
Trimmer Heads, Pivotrim™ trimmer head . . . . . LG 996
Trimmer Heads, replacement for Stihl 25-2 Auto Cut . . . . . LG 988
Trimmer Heads, Speed-Feed™ trimmer head . . . . . LG 986–987
**TRIMMER LINE & HEADS. . . . . LG 966–1015**
Trimmer Line for ST275 Cordless String Trimmer . . . . . OPE 26
Trimmer Line, Biotrim™ . . . . . LG 978
Trimmer Line, cutter . . . . . LG 985
Trimmer Line, FlexiBlade™ . . . . . LG 984
Trimmer Line, Gator® SpeedLoad™. . . . . LG 973
Trimmer Line, Gatorline™ pre-cut lengths. . . . . LG 983
Trimmer Line, Oregon® Green . . . . . LG 982
Trimmer Line, Oregon® Red . . . . . LG 982
Trimmer Line, Platinum Gatorline™. . . . . LG 979
Trimmer Line, Red Round Gatorline™. . . . . LG 983
Trimmer Line, Round Gatorline™ . . . . . LG 981
Trimmer Line, Round Magnum Gatorline™. . . . . LG 980
Trimmer Line, Square Gatorline™. . . . . LG 981
Trimmer Line, Square Magnum Gatorline™ . . . . . LG 980
Trimmer Line, SuperTwist Magnum Gatorline™ . . . . . LG 979
Trimmer Strap, universal . . . . . LG 1027
Trimmer/Edger . . . . . OPE 19
Trimmer/Edger, ST275 Oregon® 40V MAX . . . . . OPE 19
Troy-Bilt, bar & chain applications . . . . . FOR 95–96
Troy-Bilt, belts . . . . . LG 324
Troy-Bilt, blades . . . . . LG 573–576
Troy-Bilt, edger blades. . . . . LG 588
Tubeless Tire Repair Kits. . . . . SFS 69
Tubeless Tire Valve Stems . . . . . LG 957
Tubes, tires . . . . . LG 956–957
Tygon® Fuel Line . . . . . LG 761


## U


**UNIVERSAL BLADES. . . . . LG 368**
Universal Ignition Module . . . . . LG 789
Universal Semi-Pneumatic Wheels. . . . . LG 1029–1037
Universal Snow Thrower Shear Bolts. . . . . LG 852–853
Universal Snow Thrower Skids . . . . . LG 849
Universal Trimmer Harness . . . . . LG 1027
Universal Trimmer Strap. . . . . LG 1027


## V


Valve GrindingTools. . . . . SFS 66
Valve Refacer . . . . . SFS 67
Valve Spring Compressor . . . . . SFS 66
Valve Stem Fishing Tool . . . . . SFS 68
Valve Stem Repair Tool, 4-way . . . . . SFS 68
Valve Stems, tubeless tires . . . . . LG 957
Valve, oil drain . . . . . LG 760
Vise, loggers filing . . . . . SFS 14
Visor, safety. . . . . SFS 120
Voltage Regulators . . . . . LG 731–732
VP Fuels, ethanol free fuel. . . . . SFS 79–81
VP Fuels, fix-it fuel . . . . . SFS 81
VP Fuels, power spout . . . . . SFS 81
VP Fuels, siphon pump. . . . . SFS 81


## W


Walbro Carburetor Kits. . . . . LG 608–614
Walbro Carburetors . . . . . LG 595
Walbro Primer Bulbs . . . . . LG 631–632
Walker, belts . . . . . LG 325
Walker, blade adaptors. . . . . LG 342
Walker, blades . . . . . LG 576
Walker, semi-pneumatic flat-free wheel assemblies. . . . . LG 1044–1046
Warner, electric PTO clutches . . . . . LG 733–741
Washers . . . . . SFS 106
Washers, cupped steel . . . . . SFS 106
Washers, fiber . . . . . SFS 106
Washers, flat steel . . . . . SFS 106
Wedges, felling . . . . . SFS 14
Weed Eater Edger Blades . . . . . LG 588
Weed Eater Trimmer & Blower Parts . . . . . LG 1027
Welch Plugs. . . . . LG 632–633
Wen / Wagner, bar & chain applications . . . . . FOR 96
Western Auto, sprocket applications . . . . . FOR 203
Wheel Bearings. . . . . LG 223–224
Wheel Horse, air filters. . . . . LG 220
Wheel Horse, anti-scalp wheels/rollers . . . . . LG 1037–1042
Wheel Horse, muffler . . . . . LG 810
Wheel Motors, hydrostatic drive . . . . . LG 697
Wheelbarrow Wheels . . . . . LG 1047
**WHEELS . . . . . LG 1029–1047**
Wheels, AMF . . . . . LG 1029–1046
Wheels, AYP. . . . . LG 1029–1046
Wheels, Bobcat . . . . . LG 1029–1046
Wheels, Bunton . . . . . LG 1029–1046
Wheels, Honda . . . . . LG 1029–1046
Wheels, Husqvarna. . . . . LG 1029–1046
Wheels, John Deere . . . . . LG 1029–1046
Wheels, Lawn-Boy . . . . . LG 1029–1046
Wheels, MTD . . . . . LG 1029–1046
Wheels, Murray. . . . . LG 1029–1046
Wheels, Noma . . . . . LG 1029–1046
Wheels, saw chain grinders . . . . . SFS 40–41
Wheels, Sears. . . . . LG 1029–1046
Wheels, Sensation . . . . . LG 1029–1046
Wheels, Snapper . . . . . LG 1029–1046
Wheels, Toro . . . . . LG 1029–1046
Wheels, universal semi-pneumatic. . . . . LG 1029–1037
Wheels, wheel barrows . . . . . LG 1047
Wire Ties. . . . . LG 722
Wire, primary . . . . . LG 742
Wireless Tachometer. . . . . SFS 67
Wisconsin Robin, air filters . . . . . LG 220–222
Wisconsin, air filters . . . . . LG 220
Wisconsin, control cables . . . . . LG 720
Wisconsin, muffler . . . . . LG 810
Woodruff Keys, display pack . . . . . LG 801
Woods, belts . . . . . LG 325–330
Woods, blades . . . . . LG 577–579
Woods, electric PTO clutches . . . . . LG 733–741
Work Light, WL275 Oregon® 40V MAX Cordless. . . . . OPE 22
Worx, bar & chain applications . . . . . FOR 97
Wright Stander, belts. . . . . LG 330–331
Wright Stander, blades. . . . . LG 579–582
Wright Stander, electric PTO clutches . . . . . LG 733–741
Wright Stander, semi-pneumatic flat-free wheel assemblies . . . . . LG 1044–1046
Wright Stander, spindles. . . . . LG 905
Wypall Pre-Moistened Hand Towellet . . . . . SFS 68


## Y


Yamakoyo Carburetors. . . . . LG 601
Yazoo, bearings. . . . . LG 248
Yazoo, belts . . . . . LG 297
Yoke, adjustable . . . . . LG 805


## Z


Zama, carburetor Kits . . . . . LG 614–621
Zama, carburetors . . . . . LG 595
Zama, primer bulbs. . . . . LG 632
Zipper, blades. . . . . LG 583
Zone Safety Cables. . . . . LG 701–720

# The Oregon® Customer Satisfaction Policy

**Oregon Limited Warranty – Replacement Parts***
At Oregon, our goal is help you get the job done right with outstanding products that perform to your full satisfaction.
Oregon | Blount, Inc. warrants its products to be free from defects in materials and workmanship for as long as it is owned by the original retail purchaser.

If for any reason, you are not satisfied with our products, please let us know. Our contact information is listed below.

LIABILITY UNDER THIS WARRANTY IS LIMITED TO REPLACEMENT PARTS AT THE OPTION OF YOUR OREGON DISTRIBUTOR AND OREGON. PLEASE CONTACT YOUR OREGON DISTRIBUTOR OR US DIRECTLY. OREGON PRODUCTS ARE NOT WARRANTED AGAINST NORMAL WEAR AND TEAR, USER ABUSE, IMPROPER MAINTENANCE OR IMPROPER REPAIR.

REPLACEMENT OF DEFECTIVE PRODUCT IS THE EXCLUSIVE REMEDY UNDER THIS WARRANTY AND ANY APPLICABLE IMPLIED WARRANTY. THE REPLACEMENT WILL BE UNDERTAKEN AS SOON AS REASONABLY POSSIBLE AFTER RECEIPT OF THE DEFECTIVE PRODUCT. TO THE EXTENT PERMITTED BY LAW, ANY IMPLIED WARRANTY OF MERCHANTABILITY OR FITNESS FOR A PARTICULAR PURPOSE APPLICABLE TO THIS PRODUCT IS LIMITED TO THE DURATION AND SCOPE OF THIS EXPRESS WARRANTY. OREGON SHALL NOT BE LIABLE FOR ANY CONSEQUENTIAL OR INCIDENTAL DAMAGES. SOME STATES DO NOT ALLOW LIMITATIONS ON HOW LONG AN IMPLIED WARRANTY LASTS OR DO NOT ALLOW THE EXCLUSION OF CONSEQUENTIAL DAMAGES, SO THE ABOVE LIMITATION OR EXCLUSION MAY NOT APPLY TO YOU. THIS WARRANTY GIVES THE ORIGINAL OWNER SPECIFIC LEGAL RIGHTS, AND YOU MAY ALSO HAVE OTHER RIGHTS WHICH VARY FROM STATE TO STATE.

**You Have Additional OEM Warranty Protection**
If an original equipment manufacturer (OEM) declines to honor their written warranty solely because you purchased and used Oregon replacement parts in the OEMs product, please read on.

Oregon will allow you to substitute the rights and remedies provided to you under the OEMs written warranty for this express limited warranty. Here's how it works: Send us a written confirmation — from the OEM — that states that the OEM has refused to honor the OEM written warranty solely because you purchased and used Oregon replacement parts in the OEMs product. We are here to help.

**Oregon 120V Professional Series 2-Year Limited Warranty**
Oregon offers the original purchaser a two (2) year limited warranty for products for which they will be the end user, and a ninety (90) day limited warranty for products purchased to rent to other end users. The Oregon 120V Professional Series limited warranty covers the following products: BL120VX-NA Backpack Blower, ST120VX-NA String Trimmer, EHT120VX-NA Hedge Trimmer, EG120VX-NA Edger, BX975-UV Battery, BX650-UV Battery, C1600-NA Charger, CD01120VX-NA Battery-to-Tool Cable, BPBXOR01-UV Backpack, and BPBXSY01-UV Backpack.

**Cordless Tool System 3-Year Limited Warranty †**
At Oregon, we're committed to building better cordless tools to help you do the best job possible. Our commitment is backed by a three-year limited warranty for all Oregon Cordless Tools and Chargers, and a two-year limited warranty for all Oregon Cordless Battery Packs.

**Oregon CS1500 Chain Saw 2-Year Limited Warranty**
Blount, Inc. warrants all Oregon CS1500 Chain Saws for a period of two (2) years for personal use. This warranty is one (1) year for units that have been rented, or used for commercial or industrial use. During the warranty period, Blount will replace or, at its option, repair for the original purchaser only, free of charge, any product or part which is found upon examination by Blount to be defective in material and/or workmanship. The purchaser shall be responsible for all transportation charges and any cost of removing any part submitted for replacement under this warranty.

**Oregon Log Splitter Limited Warranty**
Blount, Inc. warrants all Oregon branded Log Splitters in the following manner: All steel components are warranted for (3) years. 22-ton engines (as rated by the manufacturer) are warranted for (2) years. 28-ton engines (as rated by manufacturer) are warranted for (3) years. Hydraulics are warranted for (1) year.

**You Can Reach Us Several Ways**
We're here to take your calls between 7:30 a.m. and 4:00 p.m. (Pacific Time) Monday through Friday.
Our phone number is 800-223-5168. Or, write to us at: Technical Services Department, Oregon, Blount, Inc., P.O. Box 22127, Portland, Oregon 97269-2127. You can also visit our website at OregonProducts.com. Use the "Technical Information" or "Technical Services" links.

* In this catalog, the Oregon Limited Warranty covers all Oregon products except Oregon Cordless Tool System products, Oregon 120V Professional Series products, Oregon Log Splitter products, and the Oregon CS1500 chain saw product. Product exceptions are warranted under separate warranties.
† Warranty is 2 years if product is used for commercial purposes.

© 2019 Oregon | Blount, Inc. This catalog, photographs, images, and content are the exclusive copyrighted work of Blount, Inc. and may not be duplicated in whole or in part without the company's express written authorization.

OregonProducts.com

(800) 223-5168

TechnicalServices@OregonProducts.com

Oregon® | Blount, Inc.
4909 SE International Way
Portland, Oregon 97222

© Copyright 2019, Blount Inc.
OEP-FOR-0 • Rev AQ • 09/18
Printed in USA